Online User's Guide

ADS-1300
ADS-1350W
ADS-1800W

© 2023 Brother Industries, Ltd. All rights reserved.

Table of Contents

Before You Use Your Brother Machine 1
Definitions of Notes 2
Trademarks 3
Open Source Licensing 4
Copyright and License 5
Important Note 6
Introduction to Your Brother Machine 7
About This Machine 8
Set Up Your Scanner 9
Control Panel Overview 10
Assign Scan Functions to Device Scan Button 1 14
Touchscreen LCD Overview 16
Enter Text on Your Brother Machine 20
Access Brother Utilities (Windows) 21
Uninstall the Brother Software and Drivers (Windows) 22
Access Brother iPrint&Scan (Windows/Mac) 23
Paper Handling 24
Document Specifications 25
Acceptable Documents 26
Unacceptable Documents 28
Carrier Sheet Recommendations 30
Notes for Using Carrier Sheets 31
Load Documents 32
Load Standard Size Documents 33
Load Business Cards 35
Load a Plastic Card 36
Load Documents Longer than Standard Size 37
Load Non-standard Size Documents 38
Load New Articles, Photos, and other Documents 40
Scan 42
Before Scanning 43
Scan Using the Scan Functions on Your Brother Machine 44
Save Scanned Documents on Your Computer 45
Save Scanned Documents Using Scan to Workflow Function 47
Save Scanned Documents to a USB Flash Drive 48
Send Scanned Data to an Email Recipient 50
Set Up the Address Book 53
Scan to FTP 56
Scan to SSH Server (SFTP) 60
Scan to Network 67
Scan to SharePoint 71
Use the Web Services Protocol for Network Scanning (Windows 10 and Windows 11) 75
Change the Scan Button Settings from Brother iPrint&Scan 79
Restrict Scan Functions from External Devices 81
Scan Using Brother iPrint&Scan (Windows/Mac) 82

Configure Scan to Workflow Settings Using Brother iPrint&Scan 83
Scan from Your Computer (Windows) 84
Scan Using Nuance™ PaperPort™ 14SE or Other Windows Applications 85
Scan Using Windows Fax and Scan 93
Scan from Your Computer (Mac) 96
Scan Using Apple Image Capture (ICA Driver) 97
Using AirPrint Scanning 101
Configure Scan Settings Using Web Based Management 104
Set the Scan Job Email Report Using Web Based Management 105
Network 106
Configure Network Settings 107
Configure Network Settings Using the Control Panel 108
Wireless Network Settings 109
Use the Wireless Network 110
Use Wi-Fi Direct® 118
Use Wireless Direct 122
Enable or Disable the Wireless LAN 125
Wireless LAN Error Codes 126
Network Features 129
Configure and Operate LDAP Search 130
Synchronise Time with the SNTP Server Using Web Based Management 134
Reset the Network Settings to Factory Default 138
Brother Management Tools 139
Security 140
Before Using Network Security Features 141
Configure Certificates for Device Security 142
Supported Security Certificate Features 143
How to Create and Install a Certificate 144
Create a Self-signed Certificate 145
Create a Certificate Signing Request (CSR) and Install a Certificate from a Certificate Authority (CA) 146
Import and Export the Certificate and Private Key 150
Import and Export a CA Certificate 153
Manage Multiple Certificates 156
Use SSL/TLS 157
Introduction to SSL/TLS 158
Manage Your Network Machine Securely Using SSL/TLS 161
Use SNMPv3 165
Manage Your Network Machine Securely Using SNMPv3 166
Use IEEE 802.1x Authentication 168
What Is IEEE 802.1x Authentication? 169
Configure IEEE 802.1x Authentication for Your Network Using Web Based Management (Web Browser) 170
IEEE 802.1x Authentication Methods 172
Use Active Directory Authentication 173
Introduction to Active Directory Authentication 174
Configure Active Directory Authentication Using Web Based Management 175

Log On to Change the Machine Settings Using the Machine's Control Panel (Active Directory Authentication) ... 177
Use LDAP Authentication ... 178
Introduction to LDAP Authentication ... 179
Configure LDAP Authentication Using Web Based Management ... 180
Log On to Change the Machine Settings Using the Machine's Control Panel (LDAP Authentication) ... 181
Use Secure Function Lock 3.0 ... 182
Before Using Secure Function Lock 3.0 ... 183
Configure Secure Function Lock 3.0 Using Web Based Management ... 184
Configure Public Mode for Secure Function Lock 3.0 ... 185
Register an External IC Card Reader ... 186
Send an Email Securely ... 187
Configure Email Sending Using Web Based Management ... 188
Send an Email with User Authentication ... 189
Send an Email Securely Using SSL/TLS ... 190
Lock the Machine Settings from the Control Panel ... 191
Setting Lock Overview ... 192
Brother Web Connect ... 195
Brother Web Connect Overview ... 196
Configure the Proxy Server Settings Using Web Based Management ... 197
Online Services Used with Brother Web Connect ... 198
Set Up Brother Web Connect ... 200
Brother Web Connect Setup Overview ... 201
Create an Account for Each Online Service Before Using Brother Web Connect ... 202
Apply for Brother Web Connect Access ... 203
Register an Account on Your Brother Machine for Brother Web Connect ... 204
Scan and Upload Documents Using Brother Web Connect ... 206
Troubleshooting ... 207
Error and Maintenance Messages ... 208
Error Messages When Using the Brother Web Connect Feature ... 212
Error and Maintenance LEDs ... 214
Document Jam ... 217
Card Jam ... 219
If You Are Having Difficulty with Your Machine ... 220
Scanning and Other Problems ... 221
AirPrint Scanning Problems ... 227
Network Problems ... 228
Check the Serial Number ... 235
Reset Your Brother Machine ... 236
Reset the Usage Counters ... 237
Routine Maintenance ... 238
Clean Your Brother Machine ... 239
Clean the Outside of the Machine ... 240
Clean the Scanner and Rollers ... 241
Clean the Sensors ... 244
Replace Supplies ... 245

Replacement Supplies and Optional Accessories 246
Check Replacement Cycles for Your Supplies 247
Replace the Pick Up Roller 248
Replace the Separation Pad 250
Install or Remove the Output Tray 252
Pack and Ship Your Brother Machine 255
Machine Settings 257
Check Your Machine's Password 258
Change Machine Settings from the Control Panel 259
In the Event of Power Failure (Memory Storage) 260
Change the General Settings from the Control Panel 261
Save Your Favourite Settings as a Shortcut 263
Change Machine Settings from Your Computer 269
Change Machine Settings Using Web Based Management 270
Change the Machine Settings Using Remote Setup 275
Appendix 284
Specifications 285
Chemical Substances (EU REACH) 290
Brother Help and Customer Support 291

Before You Use Your Brother Machine

- Definitions of Notes
- Trademarks
- Open Source Licensing
- Copyright and License
- Important Note

Definitions of Notes

We use the following symbols and conventions throughout this User's Guide:

CAUTION	CAUTION indicates a potentially hazardous situation which, if not avoided, may result in minor or moderate injuries.
IMPORTANT	IMPORTANT indicates a potentially hazardous situation which, if not avoided, may result in damage to property or loss of product functionality.
NOTE	NOTE specifies the operating environment, conditions for installation, or special conditions of use.
	Tips icons indicate helpful hints and supplementary information.
Bold	Bold style identifies buttons on the machine's control panel or computer screen.
Italics	Italicised style emphasises an important point or refers you to a related topic.
(ADS-1800W) `Courier New`	Courier New font identifies messages shown on the machine's LCD.

Related Information

- Before You Use Your Brother Machine

Trademarks

Apple, App Store, AirPrint, Mac, macOS, iPadOS, iPad, iPhone, iPod touch and Safari are trademarks of Apple Inc., registered in the U.S. and other countries.

Nuance and PaperPort are trademarks or registered trademarks of Nuance Communications, Inc. or its affiliates in the United States and/or other countries.

USB Type-C® is registered trademarks of USB Implementers Forum.

Wi-Fi®, Wi-Fi Alliance® and Wi-Fi Direct® are registered trademarks of Wi-Fi Alliance®.

WPA™, WPA2™, WPA3™ and Wi-Fi Protected Setup™ are trademarks of Wi-Fi Alliance®.

The Bluetooth® word mark is a registered trademark owned by Bluetooth SIG, Inc. and any use of such marks by Brother Industries, Ltd. is under license. Other trademarks and trade names are those of their respective owners.

EVERNOTE is a trademark of Evernote Corporation and used under a license.

Android, Google Drive and Google Play are trademarks of Google LLC.

Intel is a trademark of Intel Corporation in the U.S. and/or other countries.

Each company whose software title is mentioned in this manual has a Software License Agreement specific to its proprietary programs.

Any trade names and product names of companies appearing on Brother products, related documents and any other materials are all trademarks or registered trademarks of those respective companies.

Related Information

- Before You Use Your Brother Machine

Open Source Licensing

This product includes open source software.

To view Open Source Licensing Remarks and Copyright Information, go to your model's **Manuals** page at support.brother.com/manuals.

Related Information

- Before You Use Your Brother Machine

Copyright and License

©2023 Brother Industries, Ltd. All rights reserved.

Related Information

- Before You Use Your Brother Machine

Important Note

- The latest manuals are available at support.brother.com/manuals.
- Check support.brother.com/downloads for Brother driver and software updates.
- To keep your machine performance up to date, check support.brother.com/downloads for the latest firmware upgrade. Otherwise, some of your machine's functions may not be available.
- Do not use this product outside the country of purchase as it may violate the wireless telecommunication and power regulations of that country.
- Not all models are available in all countries.
- Before giving your machine to anyone else, replacing it, or disposing of it, we strongly recommend resetting it to its factory settings to remove all personal information.
- In this *User's Guide*, illustrations of the ADS-1800W are used, unless otherwise specified.
- The screens in this *User's Guide* are for illustration purposes only and may differ from the actual screens.
- Unless otherwise specified, the screens in this manual are from Windows 10 and macOS v13.x. Screens on your computer may vary depending on your operating system.
- The contents of this guide and the specifications of this product are subject to change without notice.

Related Information

- Before You Use Your Brother Machine

Related Topics:

- Reset Your Brother Machine

Introduction to Your Brother Machine

- About This Machine
- Set Up Your Scanner
- Control Panel Overview
- Touchscreen LCD Overview
- Enter Text on Your Brother Machine
- Access Brother Utilities (Windows)
- Access Brother iPrint&Scan (Windows/Mac)

About This Machine

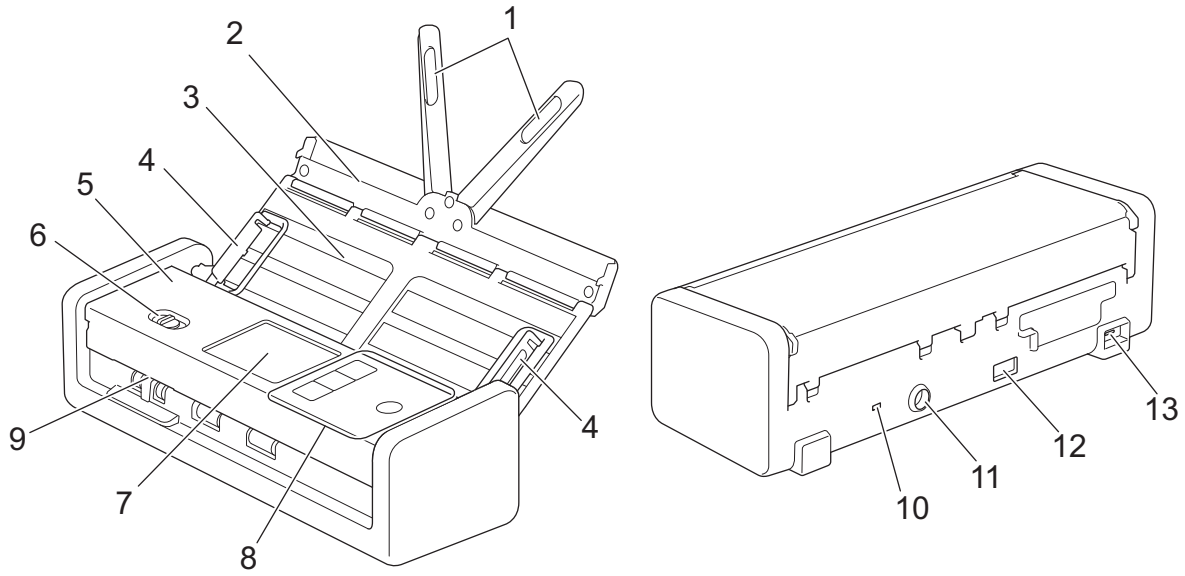

1. **Document Support Arms**
2. **Top Cover**
3. **Automatic Document Feeder (ADF)**
4. **Paper Guides**
5. **Front Cover**
6. **Feed Selector**
7. **Touchscreen LCD (ADS-1800W)**
8. **Control Panel**
9. **Card Slot**
10. **Security Slot**
11. **AC Adapter Connector**
12. **USB 2.0 Port (for connecting a USB flash drive)**
13. **USB Type-C® Port (for connecting to a computer)**

Related Information

- Introduction to Your Brother Machine

Related Topics:

- Replacement Supplies and Optional Accessories

Set Up Your Scanner

1. Open the Top Cover (1) and push the Top Cover flap (2) firmly back until it locks into place.

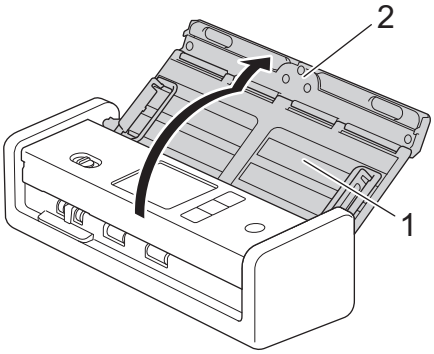

2. Lift the Document Support Arms (1).

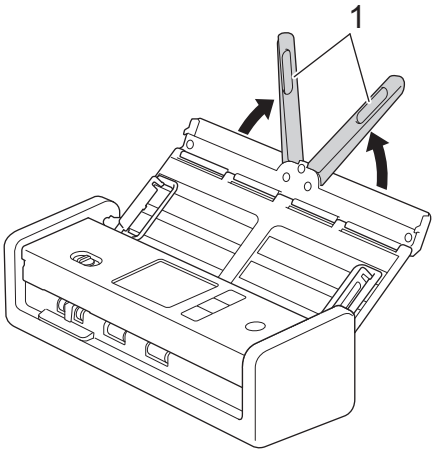

CAUTION

Do not use the ADF as a handle to carry the scanner.

Related Information

- Introduction to Your Brother Machine

Control Panel Overview

>> ADS-1300
>> ADS-1350W
>> ADS-1800W

ADS-1300

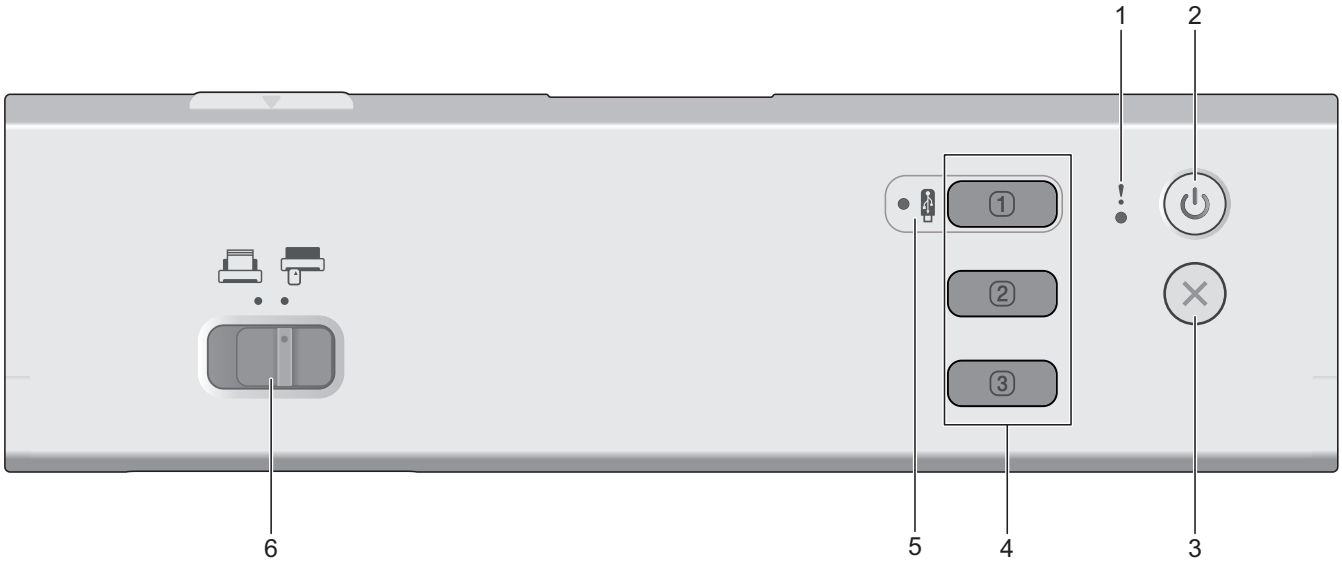

1. **Error LED**

   It flashes when the machine detects an error.

2. **(Power On/Off)**

   Press to turn the machine on.

   Press and hold to turn the machine off.

3. **(Stop)**

   Press to stop your current action and return to Ready Mode.

4. **Device Scan Buttons**

   - **Button 1**

     Press to perform a "Scan to" function after you have assigned it to this button. You can assign one of these "Scan to" functions to use as a shortcut:

     - Scan to USB
     - Scan to PC

     Assign the function you want to using Remote Setup.

   - **Button 2** / **Button 3**

     Press or to perform a "Scan to PC" function. You can assign "Scan to PC" option settings to use or as shortcuts.

   To change other scan settings (such as File Type and Resolution) to when it is assigned as "Scan to PC", , or , start Brother iPrint&Scan, select your machine, and then click the **Machine Scan Settings** button.

- Install a scanning application (for example, Brother iPrint&Scan) and configure the settings using the application before scanning from the machine.
- If your machine is connected via a network, we recommend using Web Based Management to configure the Scan Destination setting.

5. **USB LED**

   It is lit when the Scan to USB function is available.

6. **Feed Selector ((ADF Mode)/ (Plastic Card Mode))**

   Slide to select the scanner feed mode.

ADS-1350W

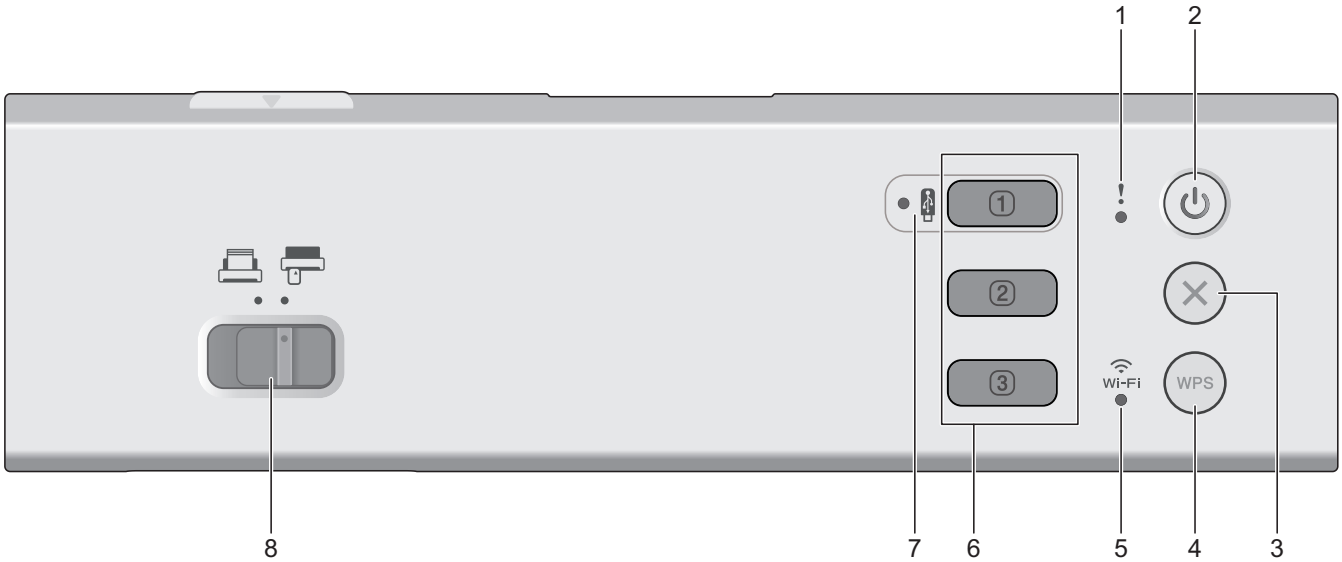

1. **Error LED**

   It flashes when the machine detects an error.

2. **(Power On/Off)**

   Press to turn the machine on.

   Press and hold to turn the machine off.

3. **(Stop)**

   Press to stop your current action and return to Ready Mode.

4. **(WPS)**

   If your wireless access point/router supports WPS (Wi-Fi Protected Setup), press to connect your machine to the wireless access point/router.

5. **Wi-Fi LED**
   - It flashes when your machine is enabled for a wireless network.
   - It remains lit when your machine is connected to a wireless access point or to the wireless network using Wireless Direct.

6. **Device Scan Buttons**
   - **Button 1**

Press ① to perform a "Scan to" function after you have assigned it to this button. You can assign one of these "Scan to" functions to use ① as a shortcut:

- Scan to USB
- Scan to PC
- WS Scan

Assign the function you want to ① using Remote Setup or Web Based Management.

- **② Button 2 / ③ Button 3**

  Press ② or ③ to perform a "Scan to PC" function. You can assign "Scan to PC" option settings to use ② or ③ as shortcuts.

To change other scan settings (such as File Type and Resolution) to ① when it is assigned as "Scan to PC", ②, or ③, start Brother iPrint&Scan, select your machine, and then click the **Machine Scan Settings** button.

- Install a scanning application (for example, Brother iPrint&Scan) and configure the settings using the application before scanning from the machine.
- If your machine is connected via a network, we recommend using Web Based Management to configure the Scan Destination setting.

7. **USB LED**

   It is lit when the Scan to USB function is available.

8. **Feed Selector ((ADF Mode)/ (Plastic Card Mode))**

   Slide to select the scanner feed mode.

ADS-1800W

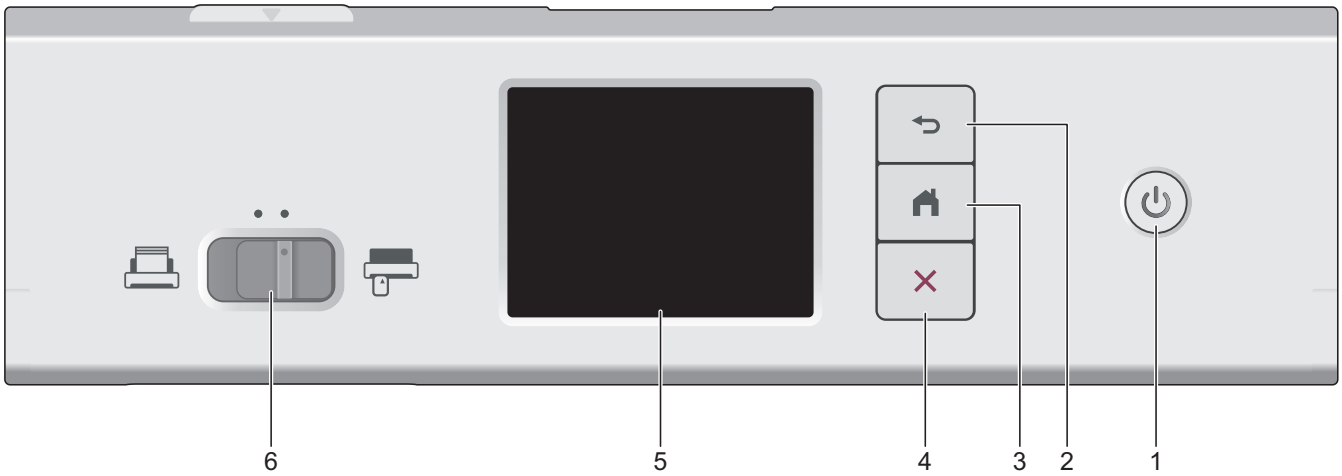

1. **(Power On/Off)**

   Press to turn the machine on.

   Press and hold to turn the machine off. The touchscreen displays `[Shutting Down]` before turning off.

2. **(Back)**

   Press to go back to the previous screen or menu.

3. **(Home Button)**

   Press to return to the Home Screen and Ready Mode.

4. **(Stop)**

   Press to stop or cancel your current action and return to Ready Mode.

5. **Touchscreen LCD**

   Access the menus and options by pressing the touchscreen.

6. **Feed Selector ((ADF Mode)/ (Plastic Card Mode))**

   Slide to select the scanner feed mode.

Related Information

- Introduction to Your Brother Machine
  - Assign Scan Functions to Device Scan Button 1

Related Topics:

- Scan to FTP
- Scan to SSH Server (SFTP)
- Scan to Network
- Save Scanned Documents on Your Computer
- Use the Web Services Protocol for Network Scanning (Windows 10 and Windows 11)

Assign Scan Functions to Device Scan Button 1

Related Models: ADS-1300/ADS-1350W

Assign one of the following scan functions to ① (Button 1) if you want to use ① as a shortcut button:

- Scan to USB
- Scan to PC
- WS Scan (ADS-1350W)

Before scanning, install a scanning application (for example, Brother iPrint&Scan), and then configure the scan settings using the application.

>> Assign using Remote Setup When Your Machine Is Connected via a USB Cable
>> Assign using Web Based Management When Your Machine Is Connected via a Network

Assign using Remote Setup When Your Machine Is Connected via a USB Cable

1. Do one of the following:
   - Windows

     Launch (**Brother Utilities**), and then click the drop-down list and select your model name (if not already selected). Click **Tools** in the left navigation bar, and then click **Remote Setup**.
   - Mac

     In the **Finder** menu bar, click **Go** > **Applications** > **Brother**, select your model name, and then double-click the **Brother Remote Setup** icon.
     If the **Search Devices** dialog box appears, select your model name and then click **Connect**.
2. Select the **Scan Destination** menu in the navigation pane, and then select the option you want to assign in the **Button 1** field.

   - Select the **Automatically switch to "Scan to USB" if a USB flash drive is inserted.** checkbox if needed.
   - (ADS-1350W) Select the **WS Scan** option, and then select the computer name where you want to send the data in the **"WS Scan" Destination** field.
3. Click **OK** to close the Remote Setup window.

Assign using Web Based Management When Your Machine Is Connected via a Network

This feature is available for ADS-1350W.

1. Start your web browser.
2. Type "https://machine's IP address" in your browser's address bar (where "machine's IP address" is the machine's IP address).

   For example:

   https://192.168.1.2
3. If required, type the password in the **Login** field, and then click **Login**.

   The default password to manage this machine's settings is located on the bottom of the machine and marked "**Pwd**". Change the default password by following the on-screen instructions when you first log in.
4. In the left navigation bar, click **Scan** > **Scan Destination**.

If the left navigation bar is not visible, start navigating from ≡.

5. Select the option you want to assign in the **Button 1** field.

- Select the **Automatically switch to "Scan to USB" if a USB flash drive is inserted.** checkbox if needed.
- (ADS-1350W) Select the **WS Scan** option, and then select the computer name where you want to send the data in the **"WS Scan" Destination** field.

6. Click **Submit**.

Related Information

- Control Panel Overview

Related Topics:

- Change the Machine Settings Using Remote Setup
- Access Web Based Management

Touchscreen LCD Overview

Related Models: ADS-1800W

Home Screens

You can switch Home screens by pressing ◀ or ▶.

From the Home screens, you can access various settings.

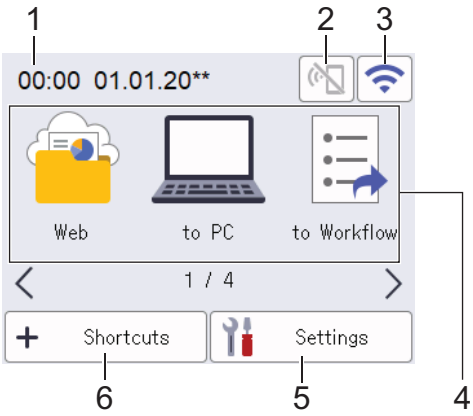

1. **Date & Time**

   Displays the date and time set on the machine.

   This area is also used to display error or maintenance messages.

2. (Wi-Fi Direct Status)

   Press to configure Wi-Fi Direct settings.

   The following icons show the Wi-Fi Direct status:

	• Your machine is not connected to the Wi-Fi Direct network. Press this icon to configure Wi-Fi Direct settings. • Wi-Fi Direct is disabled.
	Your machine is connected to the Wi-Fi Direct network.
	The Wi-Fi Direct network cannot be detected.

3. (Wireless Status)

   The following icons show the wireless network status:

	• Your machine is not connected to the wireless access point/router. Press this icon to configure wireless settings. For more detailed information, see the *Quick Setup Guide*. • The wireless setting is disabled.
	The wireless network is connected. A three-level indicator in each of the Home screens displays the current wireless signal strength.
	The wireless access point/router cannot be detected.

You can configure wireless settings by pressing the Wireless Status button.

4. **Modes:**

   Press to switch to each mode.

- [Web]

  Press to connect your machine to an Internet service.
- [to PC]

  Press to access the Scan to PC function.
- [to Workflow]

  Press to access the Scan to Workflow function.

Settings must be configured in iPrint&Scan in advance.

- [to Network]

  Press to access the Scan to Network function.
- [to FTP/SFTP]

  Press to access the Scan to FTP/SFTP function.
- [to Email Server]

  Press to access the Scan to Email Server function.
- [to SharePoint]

  Press to access the Scan to SharePoint function.
- [Apps]

  Press to connect your machine to the Brother Apps service.
- [WS Scan]

  Press to access the WS Scan function.
- [to USB]

  Press to access the Scan to USB function.

5. ([Settings])

   Press to access the Settings menu.

6. ([Shortcuts])

   Press to create Shortcuts for frequently-used operations such as Scan to PC, Scan to Email Server, Scan to USB, or other functions.

   You can quickly scan using the options set as Shortcuts.

- If an error message or notification appears in the information bar, press the message area to view the details.

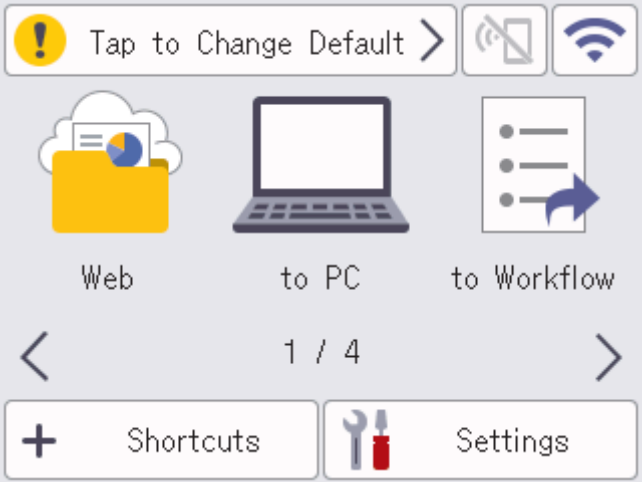

  - The warning icon appears when there is an error or maintenance message.
  - The information icon appears when there are helpful hints or supplementary information available.
- This product adopts the font of ARPHIC TECHNOLOGY CO., LTD.

Auto Start Scan

The Auto Start Scan feature allows you to start scanning automatically as soon as a document is placed in the ADF.

To use Auto Start Scan, you must first create an Auto Start Scan Shortcut, and then enable the Auto Start Scan setting in [General Setup]:

1. Press [Shortcuts].
2. Press ◀ to display [Auto Start Scan].

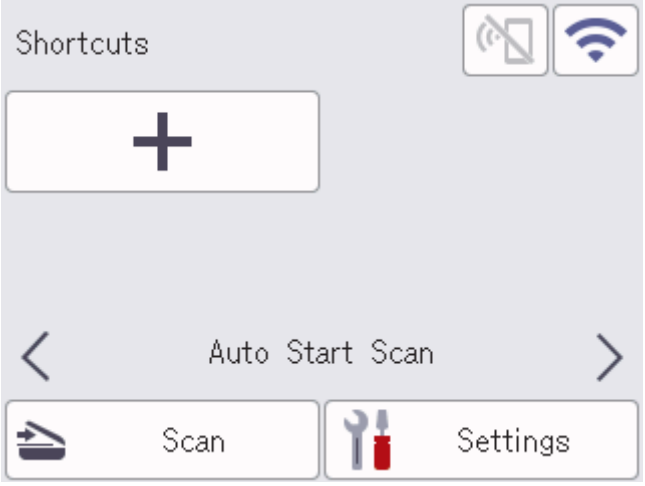

3. Press + to add the Auto Start Scan Shortcut.
4. Select the Shortcut function (for example, Scan to PC).
5. Press [Save as Shortcut]. When the LCD displays [These settings will be saved as a shortcut.], press [OK].
6. Enter the Shortcut Name and press [OK]. When the LCD displays [Make this a One Touch Shortcut?], press [OK].
7. Press ([Settings]) to access the Settings menu. Press [General Setup] > [Auto Start Scan Mode] and select [On].

NOTE

Only one Auto Start Scan profile can be saved at a time.

Settings Menu

Press ([Settings]) to check and access all the machine's settings.

- [General Setup]

  Press to access the General Settings menu.
- [Shortcut Settings]

  Press to set Shortcuts. This option is unavailable and cannot be selected if you have not added Shortcuts.
- [Network]

  Press to access Network settings.
- [Machine Info.]

  Press to check the machine's information.
- [Initial Setup]

  Press to access the [Date and Time], [Reset], and [Local Language] menus.

Related Information

- Introduction to Your Brother Machine

Enter Text on Your Brother Machine

Related Models: ADS-1800W

When you must enter text on your Brother machine, a keyboard appears on the touchscreen.

- The characters that are available may differ depending on your country.
- The keyboard layout may differ depending on the function you are setting.

- Press A 1 @ to select letters, numbers and special characters.
- Press ⇧aA to select lowercase and uppercase letters.

Inserting spaces

- To enter a space, press ␣.

Making corrections

- If you entered an incorrect character and want to change it, press ⌫, and then enter the correct character.

Related Information

- Introduction to Your Brother Machine

Access Brother Utilities (Windows)

Brother Utilities is an application launcher that offers convenient access to all Brother applications installed on your computer.

1. Do one of the following:
   - Windows 11

     Click > **All apps** > **Brother** > **Brother Utilities**.
   - Windows 10

     Click > **Brother** > **Brother Utilities**.
2. Select your machine.

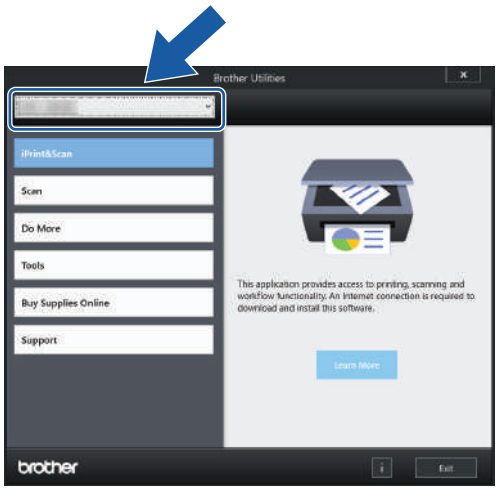

3. Select the operation you want to use.

Related Information

- Introduction to Your Brother Machine
  - Uninstall the Brother Software and Drivers (Windows)

Uninstall the Brother Software and Drivers (Windows)

1. Do one of the following:
   - Windows 11

     Click > **All apps** > **Brother** > **Brother Utilities**.
   - Windows 10

     Click > **Brother** > **Brother Utilities**.
2. Click the drop-down list, and then select your model name (if not already selected). Click **Tools** in the left navigation bar, and then click **Uninstall**.

   Follow the instructions in the dialog box to uninstall the software and drivers.

Related Information

- Access Brother Utilities (Windows)

Access Brother iPrint&Scan (Windows/Mac)

Use Brother iPrint&Scan for Windows and Mac to scan from your computer.

- This function is not available in countries subject to applicable export regulations.
- **To download the latest version:**
  - For Windows:

    Go to your model's **Downloads** page at support.brother.com/downloads, and then download and install Brother iPrint&Scan.
  - For Mac:

    Download and install Brother iPrint&Scan from the Apple App Store.

  If prompted, install the driver and software necessary to use your machine. Download your machine's latest driver and software from your model's **Downloads** page at support.brother.com/downloads.

1. Do one of the following:
   - Windows 11

     Click > **All apps** > **Brother** > **Brother iPrint&Scan**.
   - Windows 10

     Click > **Brother** > **Brother iPrint&Scan**.

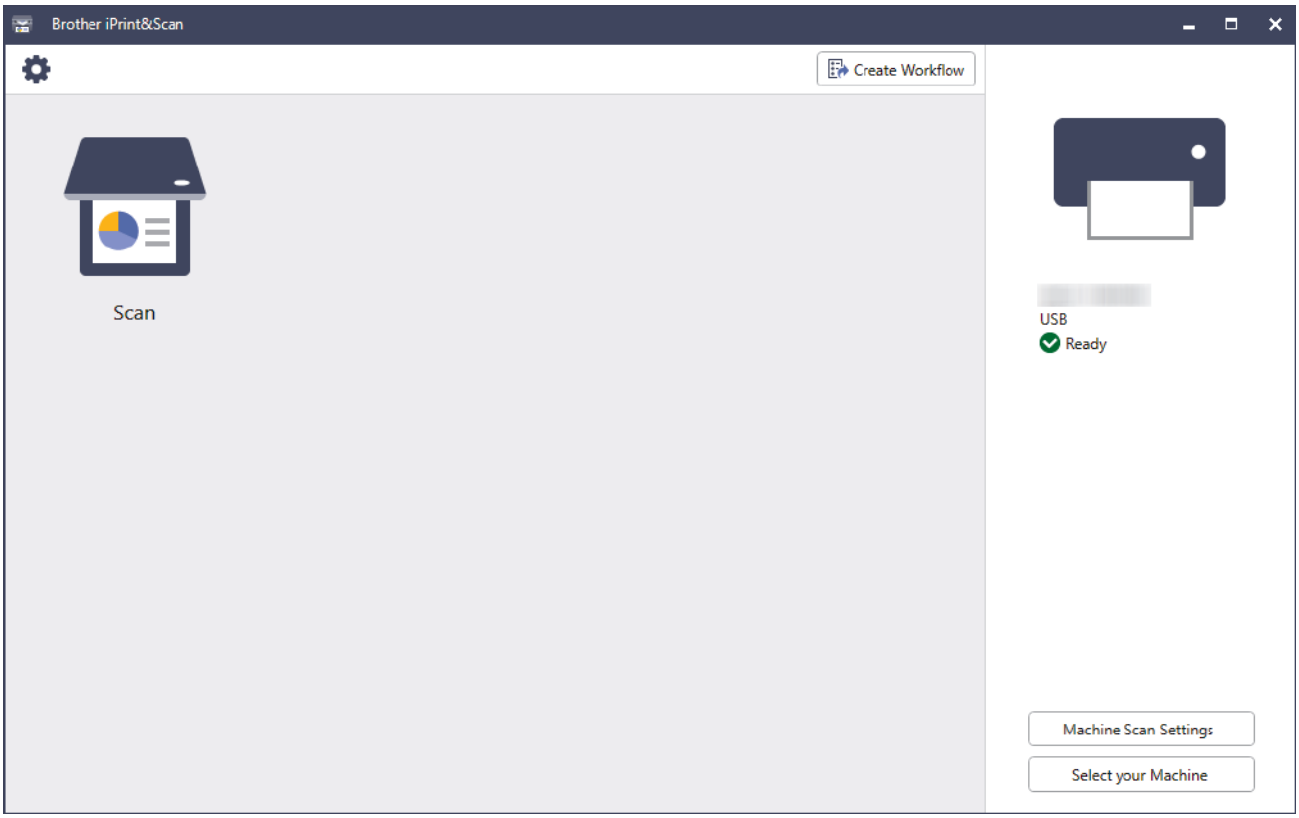

The actual screen may differ depending on the version of the application.

Related Information

- Introduction to Your Brother Machine

Paper Handling

- Document Specifications
- Load Documents

Document Specifications

- Acceptable Documents
- Unacceptable Documents
- Carrier Sheet Recommendations
- Notes for Using Carrier Sheets

Acceptable Documents

Do not load documents of varying page thickness or paper quality at the same time.

Standard Paper

Width	50.8 mm to 215.9 mm	
Length [1]	70 mm to 355.6 mm	
Weight	51.8 g/m² to 128 g/m²	
Thickness	0.08 mm to 0.14 mm To scan thinner documents, use the optional Carrier Sheet.	
Maximum Number of Pages [2]	Up to 20 sheets	
Standard Paper Size	A4	210 mm x 297 mm
	A5	148 mm x 210 mm
	A6	105 mm x 148 mm
	B5	182 mm x 257 mm
	B6	128 mm x 182 mm
	Legal	215.9 mm x 355.6 mm
	Mexican Legal	215.9 mm x 339.9 mm
	India Legal	215 mm x 345 mm
	Letter	215.9 mm x 279.4 mm
	Executive	184.1 mm x 266.7 mm
	Folio	215.9 mm x 330.2 mm

IMPORTANT

- Carbonless paper and receipts contain chemical substances that may damage and shorten the life of the Separation Pad and Pick Up Roller. If paper jams frequently occur, clean the Separation Pad and Pick Up Roller.
- When scanning paper with high wood content, the life of the Separation Pad and Pick Up Roller may be reduced compared to scanning wood-free paper.
- The Separation Pad and Pick Up Roller may become damaged when a photo or sticky note on the document touches these parts during scanning.

Plastic Card

Size (ISO)	85.6 mm x 54.0 mm
Material	Plastic (PET)
Type	Plastic card such as a store card.
Thickness	Up to 1.24 mm (with embossing) Up to 1.02 mm (without embossing)
Maximum Number of Cards	One card

Certain types of embossed cards may not scan correctly.

1 Up to 5000 mm when using the Long Paper function.

2 When using 80 g/m² plain paper.

Related Information

- Document Specifications

Unacceptable Documents

The following types of documents may not be scanned successfully:

- Documents with a carbon sheet attached
- Documents written in pencil
- Documents of uneven thickness, such as envelopes
- Documents with large wrinkles or curls
- Documents that use tracing paper
- Documents that use coated paper
- Photographs (photographic paper)
- Documents printed on perforated paper
- Documents printed on unusually-shaped paper (not square or rectangle)
- Documents with photos, notes, or stickers affixed to them
- Documents that use loose-leaf paper or any paper with holes in it
- Documents with paper clips or staples
- Documents with wet ink
- Fabrics, metallic sheets, or overhead projector sheets
- Glossy or mirrored media
- Documents that exceed recommended thicknesses

IMPORTANT

- The surface of the document may be damaged when scanning glossy papers such as photographs.
- The damage caused by using any unacceptable documents with your Brother machine may not be covered under warranty.

Related Information

- Document Specifications
  - Document Areas That Should Not Be Perforated

Related Topics:

- Clean the Scanner and Rollers

Document Areas That Should Not Be Perforated

Avoid perforating or punching holes in the shaded area shown in the illustration. Doing so will cause a scanning error.

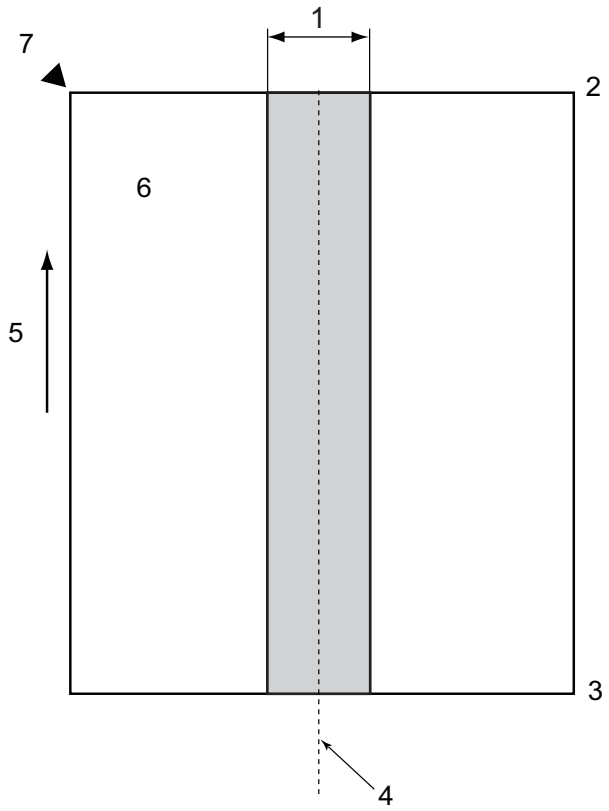

1. 27.5 mm
2. Top
3. Bottom
4. Centre
5. Feed direction
6. Front side
7. Reference point

This condition applies when the document is set in the centre of the Pick Up Roller.

Related Information

- Unacceptable Documents

Carrier Sheet Recommendations

Brother recommends using an optional Carrier Sheet to scan the following types of documents:

- Documents with a carbon sheet attached
- Documents written in pencil
- Documents that are narrower than the machine allows
- Documents that are shorter than the machine allows
- Pages that are thinner than the machine allows
- Documents of uneven thickness, such as envelopes
- Documents with large wrinkles or curls
- Bent or damaged documents
- Documents that use tracing paper
- Documents that use coated paper
- Photographs (photographic paper)
- Documents printed on perforated paper
- Documents printed on unusually-shaped paper (not square or rectangle)
- Documents with photos, notes, or stickers attached to them
- Documents that use carbonless paper
- Documents that use loose-leaf paper or any paper with holes in it

CAUTION

To avoid cutting yourself, do not slide or scrape your hand or fingers along the edge of the Carrier Sheet.

IMPORTANT

- To avoid warping the Carrier Sheet, do not place the Carrier Sheet in direct sunlight or in an area subject to high temperatures and high humidity.
- To avoid damaging the Carrier Sheet, do not bend or pull it. Do not use a damaged Carrier Sheet, as it may produce incorrect scan results.

Related Information

- Document Specifications

Related Topics:

- Replacement Supplies and Optional Accessories
- Acceptable Documents
- Specifications

Notes for Using Carrier Sheets

- To avoid document jams, do not load the optional Carrier Sheet upside down. See the instructions printed on the Carrier Sheet itself for more information.
- To avoid document jams, do not put several small documents into the Carrier Sheet at the same time. Insert only one document into the Carrier Sheet at a time.
- Do not write on the Carrier Sheet, as the writing may be seen in scanned documents. If the Carrier Sheet becomes dirty, wipe it with a dry cloth.
- Do not leave documents in the Carrier Sheet for extended periods of time; the printing on the documents may bleed through onto the Carrier Sheet.
- **If you use any of the Unacceptable Documents and damage your Brother machine, it may not be covered under warranty.**

Related Information

- Document Specifications

Related Topics:

- Replacement Supplies and Optional Accessories

Load Documents

IMPORTANT

- Make sure documents with ink or correction fluid are completely dry.
- DO NOT pull on the document while it is feeding.
- DO NOT use paper that is curled, wrinkled, folded, ripped, stapled, paper-clipped, pasted, or taped.
- DO NOT use cardboard or fabric.

- Load Standard Size Documents
- Load Business Cards
- Load a Plastic Card
- Load Documents Longer than Standard Size
- Load Non-standard Size Documents
- Load New Articles, Photos, and other Documents

Load Standard Size Documents

The ADF can hold multiple pages and feeds each sheet individually. Use standard size documents and always fan the pages before placing them in the ADF. For more information, see *Related Topics*.

1. Gently adjust the Paper Guides (1) to fit the width of your document.

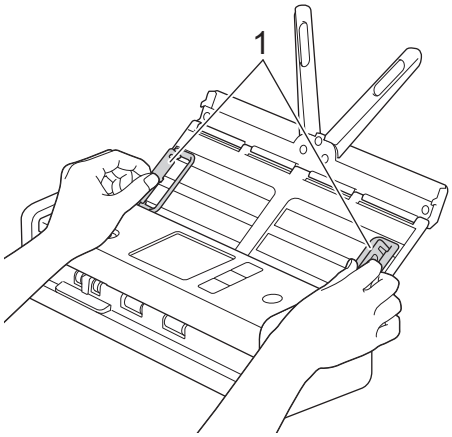

2. Fan the pages several times along both the long edge and the short edge.

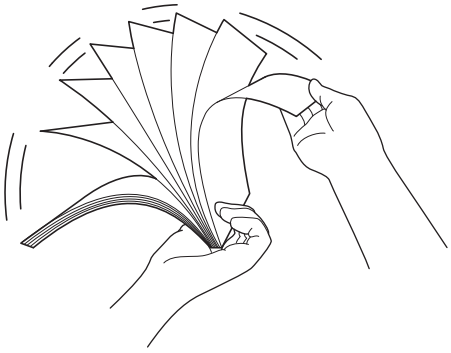

3. Align the edges of the pages.

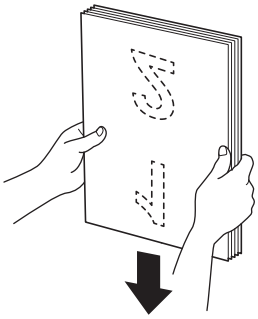

4. Position the pages so that the leading edges are aligned at a slight angle in the feed direction.

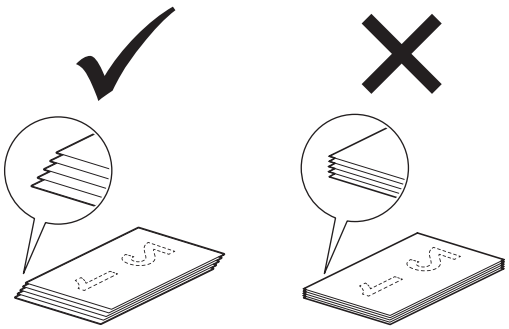

NOTE

Doing this step is necessary to avoid mutifeeds, document jams, or no feeds.

5. Slide the Feed Selector to the left and confirm that it is in ADF Mode. Place your document, *face down*, *top edge first* in the ADF between the Paper Guides until you feel it touch the inside of the machine. Feed thin pages slowly and carefully to keep the edge from folding.

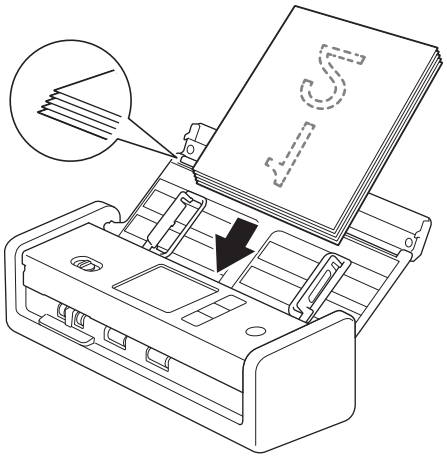

When scanning a receipt, support the receipt with your hand as it feeds through the machine to avoid skewing.

Related Information

- Load Documents

Related Topics:

- Acceptable Documents

Load Business Cards

1. Gently adjust the Paper Guides (1) to fit the width of your document.

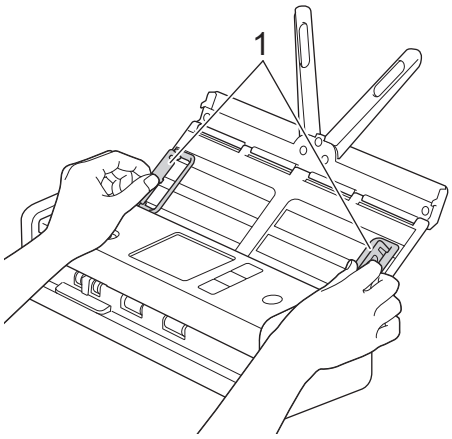

2. Slide the Feed Selector to the left and confirm that it is in ADF Mode. Place the card, *face down*, *top edge first* in the ADF between the Paper Guides until you feel it touch the inside of the machine.

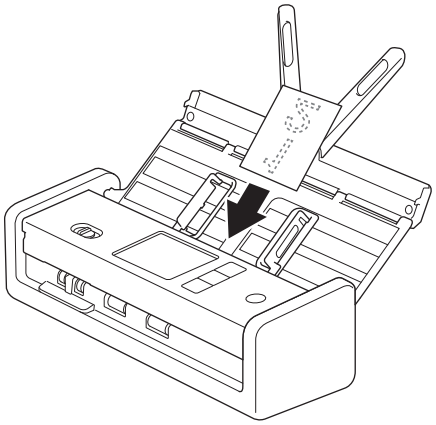

- You can load only one business card at a time.
- The Card Slot reader is not designed to scan business cards. We recommend using the Automatic Document Feeder (ADF) for this purpose.

Related Information

- Load Documents

Load a Plastic Card

1. Open the Top Cover and slide the Feed Selector to the right.

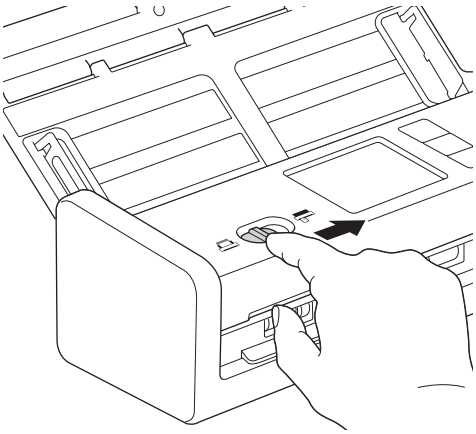

2. Insert the plastic card into the Card Slot (1) *face up* and *bottom edge first*, according to the guidelines. The card is fed into the machine.

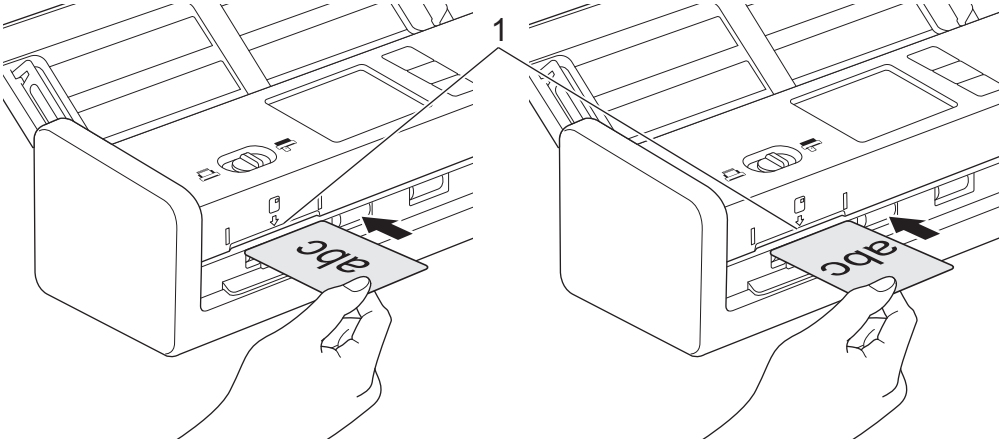

- Do not load plastic cards into the ADF.
- Load plastic card lengthwise or short edge first.
- Load only one plastic card at a time.
- Certain types of plastic cards may be scratched when scanned.
- If the surface of the card is dirty with grease marks (for example, fingerprints) or similar, wipe the dirt off before scanning.
- Certain types of embossed cards may not scan correctly.

Related Information

- Load Documents

Load Documents Longer than Standard Size

Make sure documents with ink or correction fluid are completely dry.

1. Gently adjust the Paper Guides (1) to fit the width of your document.

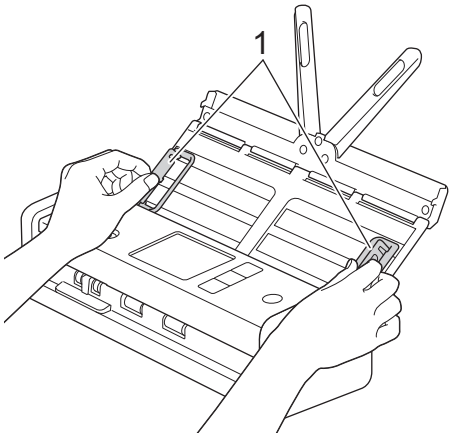

2. Slide the Feed Selector to the left and confirm that it is in ADF Mode. Place your document, *face down*, *top edge first* in the ADF between the Paper Guides until you feel it touch the inside of the machine. Feed thin pages slowly and carefully to keep the edge from folding.

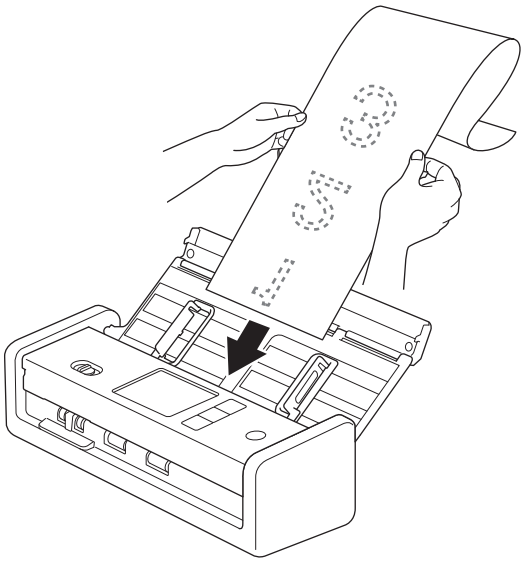

- Load only one document at a time.
- Support the document with your hand if the document is longer than the extended ADF.
- Long paper is available for scanning at resolutions below 300 x 300 dpi.
- Long paper is not available for 2-sided scanning.

Related Information

- Load Documents

Load Non-standard Size Documents

Make sure documents with ink or correction fluid are completely dry.

1. Fold your document in half and insert it into the Carrier Sheet (not included).

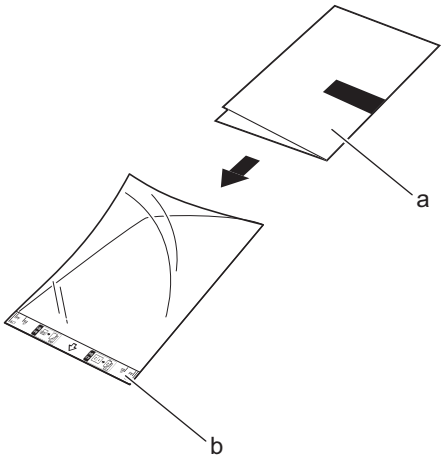

a. Document is Face Down
b. Carrier Sheet Header is Face Up

Set the document in the centre of the Carrier Sheet and align the top edge of the document with the top edge of the Carrier Sheet.

2. Adjust the Paper Guides (1) to fit the width of the Carrier Sheet.

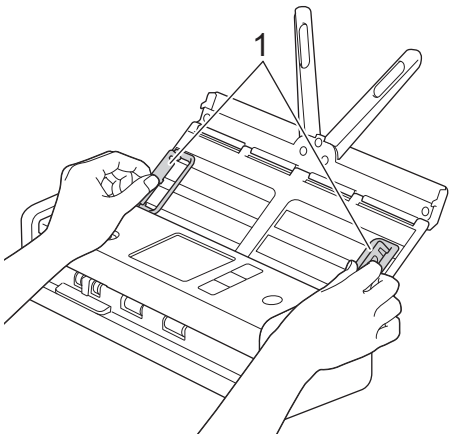

3. Place the Carrier Sheet in the ADF between the Paper Guides until you feel it touch the inside of the machine.

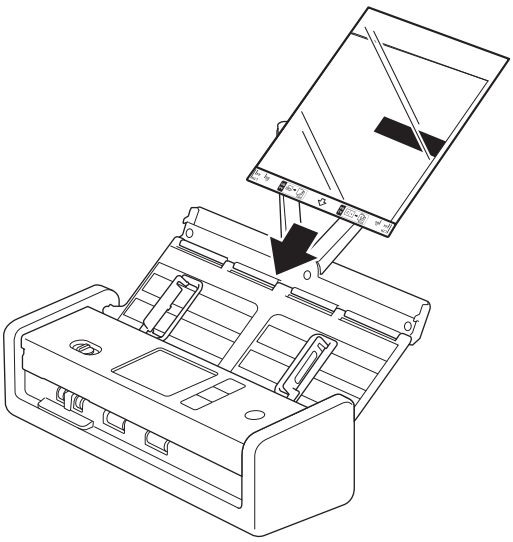

To reduce the white space in the centre of a scanned page, position the folded edge of the original document close to the edge of the Carrier Sheet.

Related Information

- Load Documents

Load New Articles, Photos, and other Documents

Make sure documents with ink or correction fluid are completely dry.

1. Insert the document into the Carrier Sheet (not included).

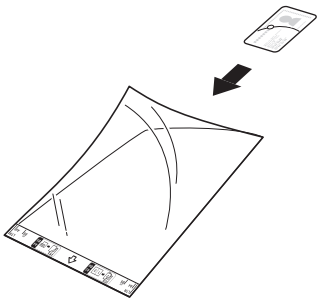

- Set the document in the centre of the Carrier Sheet and align the top edge of the document with the top edge of the Carrier Sheet.
- If the document is longer than the Carrier Sheet, fold it so that it overlaps when you insert it into the Carrier Sheet. When finished, unfold and refold it so the rest of the information is visible, insert it into the Carrier Sheet, and scan it again.

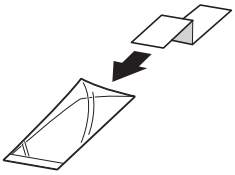

2. Adjust the Paper Guides (1) to fit the width of the Carrier Sheet.

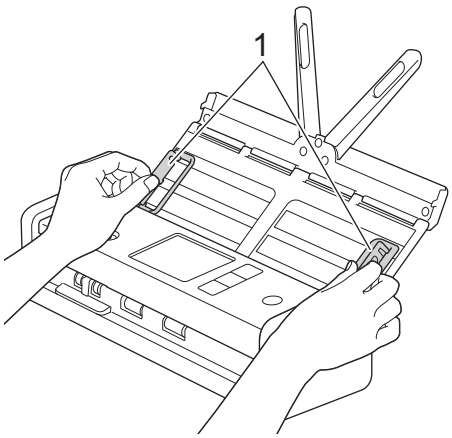

3. Place the Carrier Sheet in the ADF between the Paper Guides until you feel it touch the inside of the machine.

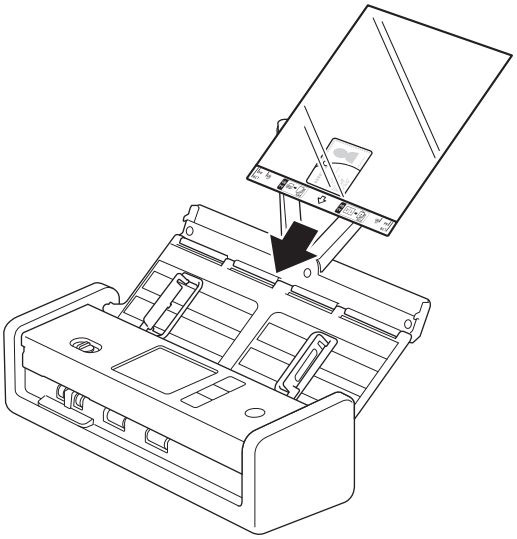

Related Information

- Load Documents

Scan

- Before Scanning
- Scan Using the Scan Functions on Your Brother Machine
- Scan Using Brother iPrint&Scan (Windows/Mac)
- Scan from Your Computer (Windows)
- Scan from Your Computer (Mac)
- Configure Scan Settings Using Web Based Management

Before Scanning

To scan without using the machine's control panel, download and install one of the following mobile or computer applications:

Application	Features	Available Operating System (OS)			How to Access
		Windows	Mac	Mobile	
Brother iPrint&Scan	Allows you to perform basic scanning and use advanced scan workflows.	Yes	Yes	No	For Windows: Go to your model's **Downloads** page at support.brother.com/downloads. For Mac: Go to the App Store.
Nuance™ PaperPort™ 14SE	Allows you to scan, share, search, and organise documents.	Yes [1]	No	No	Go to your model's **Downloads** page at support.brother.com/downloads.
Presto! BizCard (ADS-1350W/ ADS-1800W)	Manages the information from scanned business cards on your computer.	Yes [1]	Yes	No	Go to your model's **Downloads** page at support.brother.com/downloads.
Presto! ImageFolio (ADS-1800W)	Allows you to retouch and enhance scanned images/photos on your computer.	Yes [1]	Yes	No	Go to your model's **Downloads** page at support.brother.com/downloads.
Kofax Power PDF™ Standard [2]	Allows you to create, edit, and convert PDF files to other formats including Microsoft Word, Microsoft Excel, Microsoft PowerPoint, image files, and more.	Yes [1]	Yes	No	Go to your model's **Downloads** page at support.brother.com/downloads.
Brother Mobile Connect (ADS-1350W/ ADS-1800W)	Allows you to scan photos and documents directly from your mobile device.	No	No	Yes	For Android™ devices: Go to Google Play™. For iOS devices: Go to the App Store.

Related Information

- Scan

[1] TWAIN driver must be installed on your computer.

[2] If prompted to enter a Serial Number when starting the application, check the Serial Number label attached to the scanner.

Scan Using the Scan Functions on Your Brother Machine

- Save Scanned Documents on Your Computer
- Save Scanned Documents Using Scan to Workflow Function
- Save Scanned Documents to a USB Flash Drive
- Send Scanned Data to an Email Recipient
- Set Up the Address Book
- Scan to FTP
- Scan to SSH Server (SFTP)
- Scan to Network
- Scan to SharePoint
- Use the Web Services Protocol for Network Scanning (Windows 10 and Windows 11)
- Change the Scan Button Settings from Brother iPrint&Scan
- Restrict Scan Functions from External Devices

Save Scanned Documents on Your Computer

>> ADS-1300/ADS-1350W
>> ADS-1800W

ADS-1300/ADS-1350W

(ADS-1350W) If your machine is connected via a network, we recommend using Web Based Management to configure the Scan Destination setting.

Use Brother iPrint&Scan to change scan settings, such as resolution, file size or colour setting.

- Windows

  Go to your model's **Downloads** page at support.brother.com/downloads to download the latest application.
- Mac

  Download and install Brother iPrint&Scan from the App Store.

For more information, see *Related Topics*.

1. Load your document.
2. Press the Device Scan button assigned as "Scan to PC".

   The machine starts scanning.

ADS-1800W

1. Load your document.
2. Press ◀ or ▶ to display [to PC], and press it.
3. If multiple computers are connected to the machine, press ▲ or ▼ to display the destination computer you want to save to, and press it.
4. To change the scan settings, press [Options].
5. Press [Scan Settings] > [Set at Device].
6. Select the scan settings you want to change.

Option	Description
2-sided Scan	When using 2-sided scanning, select 2-sided Scan: Long Edge so the layout of the data file pages matches your original scanned document.
Colour Setting	Select the colour format for your document.
Resolution	Select the scan resolution for your document.
File Type	Select the file format for your document.
Document Size	Select your document size.
Skip Blank Page	When On is selected, blank pages are skipped.
Advanced Settings	Colour Tone Adjustment Adjust the brightness and contrast.

To save the settings as a shortcut, press [Save as Shortcut].

7. Press [OK].
8. Press [Start].

   The machine starts scanning.

Related Information

- Scan Using the Scan Functions on Your Brother Machine

Related Topics:

- Change the Scan Button Settings from Brother iPrint&Scan

Save Scanned Documents Using Scan to Workflow Function

Related Models: ADS-1800W

Before scanning, do the following using Brother iPrint&Scan (for Windows and Mac):

1. Set up the Scan to Workflow settings. For more information, see *Related Topics*.
2. In the home screen, click **Machine Scan Settings** > **Workflow**, and then select the workflow you created.

1. Load your document.
2. Press ◀ or ▶ to display `[to Workflow]`, and press it.
3. Select the destination where you want to save your scanned documents. If multiple computers are connected to the machine, press ▲ or ▼ to display the destination computer you want to save to, and press it.
4. Select the workflow.
5. Press `[Start]`.

To save the settings as a shortcut, press `[Save as Shortcut]`.

The machine starts scanning.

Related Information

- Scan Using the Scan Functions on Your Brother Machine

Related Topics:

- Configure Scan to Workflow Settings Using Brother iPrint&Scan

Save Scanned Documents to a USB Flash Drive

To avoid damaging the USB flash drive or the data stored on it, DO NOT remove it while the machine is scanning.

>> ADS-1300/ADS-1350W
>> ADS-1800W

ADS-1300/ADS-1350W

1. Insert a USB flash drive into the machine.

   Confirm that the USB LED turns on. If not, check your Scan Destination settings. For more information, see *Related Information*.

2. Load your document.

3. Press ①.

   The machine starts scanning and the scanned data is saved to the USB flash drive.

- To change the scan settings, go to Remote Setup and select **Scan to USB** in the navigation pane.
- (ADS-1350W) If your machine is connected via a network, we recommend using Web Based Management to configure the scan settings.

ADS-1800W

1. Load your document.
2. Insert a USB flash drive into the machine.

   The Scan to USB screen appears automatically. If the Scan to USB screen does not appear, press `[to USB]` in the Home screen.

3. To change the scan settings, press `[Options]`. Configure the following settings:

Option	Description
`2-sided Scan`	When using 2-sided scanning, select `2-sided Scan: Long Edge` so the layout of the data file pages matches your original scanned document.
`Colour Setting`	Select the colour format for your document.
`Resolution`	Select the scan resolution for your document.
`File Type`	Select the file format for your document.
`Document Size`	Select your document size.
`File Name`	Rename the file.
`File Name Style`	Select the order in which the date, counter number, and other items appear in the file names.
`File Size`	Select the file size for your document.
`Edge Fill For Plastic Card`	When On is selected, the four edges of the scanned plastic card image are filled with white space. `Edge Fill For Plastic Card` is available only for scanning from the Card Slot.
`Skip Blank Page`	When On is selected, blank pages are skipped.
`Document Separation`	Split a scanned image.

Option	Description
	When multiple documents have been scanned, you can split up and save documents separately by using this function. You can also set the number of pages to split a document by.
Colour/Grey TIFF Compress	Select the compression TIFF file type for a colour/grey document.
B&W TIFF Compress	Select the compression TIFF file type for a monochrome document.
Advanced Settings	Continuous Scan Scan more pages than the maximum capacity of the ADF and save them as one data file. After scanning the first batch of documents, press Continue to scan additional pages. When finished scanning, press Complete.
	Colour Tone Adjustment Adjust the brightness and contrast.
	Adjust Auto Colour Detect When Colour Setting is set to Auto, you can adjust the detection level of colour.
	Skip Blank Page Sensitivity Select the sensitivity level for detecting blank pages in the scanned data. The higher the sensitivity, the easier it is for the machine to detect blank pages.
	Margin Settings Adjust your document's margins.
Set New Default	Save your settings as the default settings.
Factory Reset	Restore all settings back to the factory settings.

- To save the settings as a shortcut, press [Save as Shortcut].
- To select [Long Paper (Narrow)] or [Long Paper (Normal)] for [Document Size], use the following settings:
  - [2-sided Scan]: [Off]
  - [Colour Setting]: Other than [Auto] ([Colour], [Grey] or [Black and White])
  - [Resolution]: Lower than 300 dpi
  - [Skip Blank Page]: [Off]
- If signed PDF was selected from the [File Type] setting, you must configure the certificate settings using Web Based Management.

4. Press [OK].
5. Press [Start].

   The machine starts scanning and the scanned data is saved to the USB flash drive.

Related Information

- Scan Using the Scan Functions on Your Brother Machine

Related Topics:

- Access Web Based Management
- Change the Machine Settings Using Remote Setup
- Assign Scan Functions to Device Scan Button 1

Send Scanned Data to an Email Recipient

Related Models: ADS-1800W

This function allows your machine to scan documents and send them to an email address without your machine being connected to a computer. To send the scanned data as an attachment directly to your default email application using the iPrint&Scan software on your computer, use the "Scan to Email Attachment" function.

- To send scanned data to an email recipient, you must configure your machine to communicate with your network and email server, which is used to send and receive emails.
- You can configure these items in Web Based Management.
- To use the Scan to Email Server function, your machine must be connected to a network and have access to an SMTP server. You will need the following SMTP information before you can proceed:
  - Server address
  - Port number
  - User name
  - Encryption type (SSL or TLS)
  - Email server certificate (if used)

  If you do not know this information, contact your email service provider or network administrator.

1. Load your document.
2. Press ◀ or ▶ to display [to Email Server], and press it.
3. Do one of the following to enter the destination email address:
   - To enter the email address manually, press [Manual], and then enter the email address using the keyboard on the LCD. When finished, press [OK].
   - If the email address is stored in the machine's address book, press [Address Book], and then select the email address.

     Press [OK].
4. Press to confirm the email address, and then press [OK].
5. To change the scan settings, press [Options]. Configure the following settings:

Option	Description
2-sided Scan	When using 2-sided scanning, select 2-sided Scan: Long Edge so the layout of the data file pages matches your original scanned document.
Colour Setting	Select the colour format for your document.
Resolution	Select the scan resolution for your document.
File Type	Select the file format for your document.
Document Size	Select your document size.
Sender Subject	Type a sender subject for your email.
File Name	Rename the file.
File Name Style	Select the order in which the date, counter number, and other items appear in the file names.
File Size	Select the file size for your document.
Edge Fill For Plastic Card	When On is selected, the four edges of the scanned plastic card image are filled with white space.

Option	Description
	Edge Fill For Plastic Card is available only for scanning from the Card Slot.
Skip Blank Page	When On is selected, blank pages are skipped.
Document Separation	Split a scanned image. When multiple documents have been scanned, you can split up and save documents separately by using this function. You can also set the number of pages to split a document by.
Colour/Grey TIFF Compress	Select the compression TIFF file type for a colour/grey document.
B&W TIFF Compress	Select the compression TIFF file type for a monochrome document.
Advanced Settings	Continuous Scan Scan more pages than the maximum capacity of the ADF and save them as one data file. After scanning the first batch of documents, press Continue to scan additional pages. When finished scanning, press Complete.
	Colour Tone Adjustment Adjust the brightness and contrast.
	Adjust Auto Colour Detect When Colour Setting is set to Auto, you can adjust the detection level of colour.
	Skip Blank Page Sensitivity Select the sensitivity level for detecting blank pages in the scanned data. The higher the sensitivity, the easier it is for the machine to detect blank pages.
	Margin Settings Adjust your document's margins.
Set New Default	Save your settings as the default settings.
Factory Reset	Restore all settings back to the factory settings.

To save the settings as a shortcut, press [Save as Shortcut].

6. Press [OK].
7. Press [Start].

   The machine starts scanning.

Related Information

- Scan Using the Scan Functions on Your Brother Machine
  - Use TX Verification Mail

Use TX Verification Mail

Related Models: ADS-1800W

Use TX Verification Mail to request notification from the destination computer that your email was received and processed. Use Web Based Management to turn the verification feature on. When **Request Delivery Notification (Send)** is **On**, your email contains an additional field that is automatically populated with the email's arrival date and time.

1. Start your web browser.
2. Type "https://machine's IP address" in your browser's address bar (where "machine's IP address" is the machine's IP address).

   For example:

   https://192.168.1.2
3. If required, type the password in the **Login** field, and then click **Login**.

The default password to manage this machine's settings is located on the bottom of the machine and marked "**Pwd**". Change the default password by following the on-screen instructions when you first log in.

4. In the left navigation bar, click **E-mail** > **E-mail Send**.

If the left navigation bar is not visible, start navigating from ≡.

5. In the **Request Delivery Notification (Send)** field, click **On**.
6. Click **Submit**.

- Message Disposition Notification (MDN)

  This field requests the status of the email message after delivery through the Simple Mail Transfer Protocol (SMTP) transport system. After the recipient has received the message, this data is used when the machine or user reads the received email. For example, if the message is opened and read, the receiver sends back a notification to the original sending machine or user.

  The recipient must activate the MDN field to be able to send a notification report; otherwise the request will be ignored.
- This Brother machine cannot receive email messages. To use the TX Verification feature, you must redirect the return notification to a different email address. Configure the email address using Web Based Management. Access Web Based Management, in the left navigation bar, click **E-mail** > **E-mail**, click **SMTP** and confirm **Device E-mail Address**. Enter the email address that you want to receive the notification.

Related Information

- Send Scanned Data to an Email Recipient

Related Topics:

- Access Web Based Management

Set Up the Address Book

Related Models: ADS-1800W

The Address Book feature lets you select an email address to send the scanned data directly.

Related Information

- Scan Using the Scan Functions on Your Brother Machine
  - Register an Email Address on Your Brother Machine
  - Register an Email Address Using Web Based Management

Register an Email Address on Your Brother Machine

Related Models: ADS-1800W

1. Press [to Email Server] > [Address Book] > [Edit] > [Add New Address] > [Name].
2. Type the name using the touchscreen, and then press [OK].
3. Press [Address].
4. Type the email address, and then press [OK].
5. To register another email address, repeat these steps.
6. Press .

Related Information

- Set Up the Address Book

Related Topics:

- Enter Text on Your Brother Machine

Register an Email Address Using Web Based Management

Related Models: ADS-1800W

You can register up to 300 email addresses and enter a name for each address.

1. Start your web browser.
2. Type "https://machine's IP address" in your browser's address bar (where "machine's IP address" is the machine's IP address).

   For example:

   https://192.168.1.2
3. If required, type the password in the **Login** field, and then click **Login**.

   The default password to manage this machine's settings is located on the bottom of the machine and marked "**Pwd**". Change the default password by following the on-screen instructions when you first log in.
4. In the left navigation bar, click **Address Book** > **Address ####**.

   If the left navigation bar is not visible, start navigating from ≡.
5. In the **E-mail Address** field, type an email address.
6. In the **Name** field, type a name.
7. Click **Submit**.

Related Information

- Set Up the Address Book

Related Topics:

- Access Web Based Management

Scan to FTP

Related Models: ADS-1800W

Scan documents directly to an FTP server when you need to share the scanned information. For added convenience, configure different profiles to save your favourite Scan to FTP destinations.

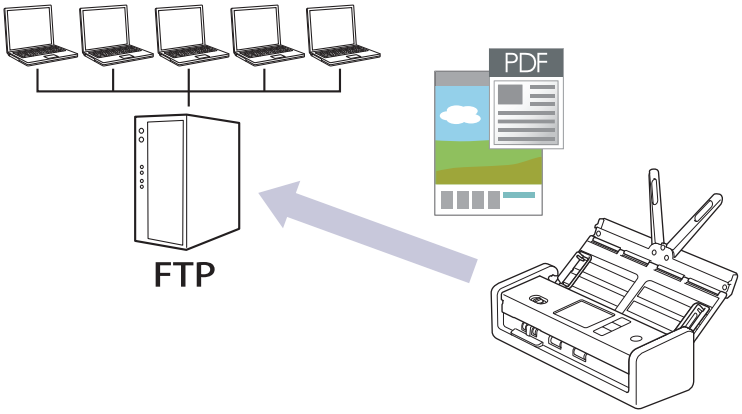

- Set up a Scan to FTP Profile
- Upload Scanned Data to an FTP Server

Set up a Scan to FTP Profile

Related Models: ADS-1800W

Set up a Scan to FTP Profile to scan and upload the scanned data directly to an FTP location.

- We recommend using the latest version of the following web browsers:
  - Microsoft Edge, Firefox, and Google Chrome™ for Windows
  - Safari, Firefox, and Google Chrome™ for Mac
  - Google Chrome™ for Android™
  - Safari and Google Chrome™ for iOS
- Ensure that JavaScript and Cookies are always enabled, regardless of which browser you use.

1. Start your web browser.
2. Type "https://machine's IP address" in your browser's address bar (where "machine's IP address" is the machine's IP address).

   For example:

   https://192.168.1.2
3. If required, type the password in the **Login** field, and then click **Login**.

The default password to manage this machine's settings is located on the bottom of the machine and marked "**Pwd**". Change the default password by following the on-screen instructions when you first log in.

4. In the left navigation bar, click **Scan** > **Scan to FTP/SFTP/Network/SharePoint**.

If the left navigation bar is not visible, start navigating from ≡.

5. Select the **FTP** option, and then click **Submit**.
6. Click the **Scan to FTP/SFTP/Network/SharePoint Profile** menu.
7. Select the profile you want to set up or change.

Using the following characters: ?, /, \, ", :, <, >, | or * may cause a sending error.

Option	Description
Profile Name	Type a name for this server profile (up to 14 alphanumeric characters). The machine displays this name on the LCD.
Host Address	Type the Host Address (for example: ftp.example.com; up to 64 characters) or the IP address (for example: 192.23.56.189).
Username	Type a user name (up to 32 characters) that has permission to write data to the FTP server.
Password	Type the password (up to 33 characters) associated with the user name you entered in the **Username** field. Type the password again in the **Retype password** field.
SSL/TLS	Set the **SSL/TLS** option to scan securely using SSL/TLS communication. Change the **CA Certificate** setting, if needed.
Store Directory	Type the path (up to 255 characters) to the folder on the FTP server where you want to send your scanned data. Do not type a slash mark at the beginning of the path (for example: brother/abc).

Option	Description
File Name	Select a file name from the preset names provided, or from user-defined names. You can set the user-defined names and file name style in the **Scan File Name** menu in the navigation menu.
Quality	Select a quality setting. When **Auto** is selected, you can adjust the detection level of colour from the **Auto Color detect adjust** drop-down list.
File Type	Select the file type you want to use for the scanned document.
Document Size	Select your document size from the list. This is necessary to make sure the scanned file is the correct size.
Edge Fill for Plastic Card	When On is selected, the four edges of the scanned plastic card image are filled with white space. **Edge Fill for Plastic Card** is available only for scanning from the Card Slot.
Margin Settings	Adjust your document's margins.
File Size	Select your file size.
Skip Blank Page	Select the **On** option to remove blank pages of the document from the scanning results.
Skip blank page sensitivity	Select the sensitivity level for detecting blank pages in the scanned data. The higher the sensitivity, the easier it is for the machine to detect blank pages.
Document Separation	Split a scanned image. When multiple documents have been scanned, you can split up and save documents separately by using this function. You can also set the number of pages to split a document by.
Color/Gray TIFF Compression	Select the compression TIFF file type for a colour/grey document.
B&W TIFF Compression	Select the compression TIFF file type for a monochrome document.
2-sided Scan	Select **On** to scan both sides of the document.
Brightness	Select the brightness level.
Contrast	Select the contrast level.
Continuous Scan	Scan more pages than the maximum capacity of the ADF and save them as one data file.
Passive Mode	Set the **Passive Mode** option to off or on depending on your FTP server and network firewall configuration. The default setting is off. In most cases this setting does not need to be changed.
Port Number	Change the **Port Number** setting used to access the FTP server. The default for this setting is port 21. In most cases this setting does not need to be changed.

8. Click **Submit**.

Related Information

- Scan to FTP

Related Topics:

- Access Web Based Management

Upload Scanned Data to an FTP Server

Related Models: ADS-1800W

1. Load your document.
2. Press ◀ or ▶ to display `[to FTP/SFTP]`, and press it.
3. The server profiles you have set up using Web Based Management are listed. Select the profile you want. If the profile is not complete (for example, if the logon account name and password are missing, or if the quality or file type is not specified), you will be prompted to enter any missing information.
4. Press `[Start]`.

   The machine starts scanning.

Related Information

- Scan to FTP

Scan to SSH Server (SFTP)

Related Models: ADS-1800W

Uses the Secure Shell Protocol to establish a private and safe data stream when scanning documents to a network destination. For added convenience, configure different profiles to save your favourite Scan to SFTP destinations.

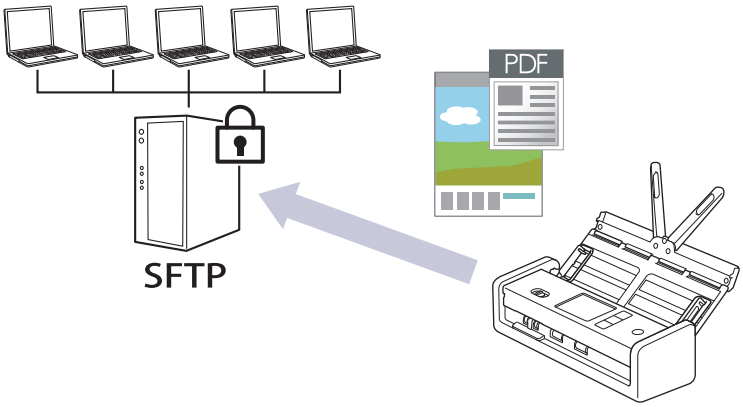

- Set up a Scan to SFTP Profile
- Create a Client Key Pair Using Web Based Management
- Export a Client Key Pair Using Web Based Management
- Import a Server Public Key Using Web Based Management
- Upload Scanned Data to an SFTP Server

Set up a Scan to SFTP Profile

Related Models: ADS-1800W

Set up a Scan to SFTP Profile to scan and upload scanned data directly to an SFTP location.

- We recommend using the latest version of the following web browsers:
  - Microsoft Edge, Firefox, and Google Chrome™ for Windows
  - Safari, Firefox, and Google Chrome™ for Mac
  - Google Chrome™ for Android™
  - Safari and Google Chrome™ for iOS
- Ensure that JavaScript and Cookies are always enabled, regardless of which browser you use.

1. Start your web browser.
2. Type "https://machine's IP address" in your browser's address bar (where "machine's IP address" is the machine's IP address).

   For example:

   https://192.168.1.2
3. If required, type the password in the **Login** field, and then click **Login**.

The default password to manage this machine's settings is located on the bottom of the machine and marked "**Pwd**". Change the default password by following the on-screen instructions when you first log in.

4. In the left navigation bar, click **Scan** > **Scan to FTP/SFTP/Network/SharePoint**.

If the left navigation bar is not visible, start navigating from ≡.

5. Select the **SFTP** option, and then click **Submit**.
6. Click the **Scan to FTP/SFTP/Network/SharePoint Profile** menu.
7. Select the profile you want to set up or change.

Using the following characters: ?, /, \, ", :, <, >, | or * may cause a sending error.

Option	Description
Profile Name	Type a name for this server profile (up to 14 alphanumeric characters). The machine displays this name on the LCD.
Host Address	Type the Host Address (for example: ftp.example.com; up to 64 characters) or the IP address (for example: 192.23.56.189).
Username	Type a user name (up to 32 characters) that has permission to write data to the SFTP server.
Auth. Method	Select **Password** or **Public Key**. Do one of the following: • When you select **Password**, type the password (up to 33 characters) associated with the user name you typed in the **Username** field. Type the password again in the **Retype password** field. • When you select **Public Key**, select the authentication type from the **Client Key Pair** drop-down list.
Server Public Key	Select the authentication type.

Option	Description
Store Directory	Type the path (up to 255 characters) to the folder on the SFTP server where you want to send your scanned data. Do not type a slash mark at the beginning of the path (for example: brother/abc).
File Name	Select a file name from the preset names provided, or from user-defined names. You can set the user-defined names and file name style in the **Scan File Name** menu in the navigation menu.
Quality	Select a quality setting. When **Auto** is selected, you can adjust the detection level of colour from the **Auto Color detect adjust** drop-down list.
File Type	Select the file type you want to use for the scanned document.
Document Size	Select your document size from the list. This is necessary to make sure the scanned file is the correct size.
Edge Fill for Plastic Card	When On is selected, the four edges of the scanned plastic card image are filled with white space. **Edge Fill for Plastic Card** is available only for scanning from the Card Slot.
Margin Settings	Adjust your document's margins.
File Size	Select your file size.
Skip Blank Page	Select the **On** option to remove blank pages of the document from the scanning results.
Skip blank page sensitivity	Select the sensitivity level for detecting blank pages in the scanned data. The higher the sensitivity, the easier it is for the machine to detect blank pages.
Document Separation	Split a scanned image. When multiple documents have been scanned, you can split up and save documents separately by using this function. You can also set the number of pages to split a document by.
Color/Gray TIFF Compression	Select the compression TIFF file type for a colour/grey document.
B&W TIFF Compression	Select the compression TIFF file type for a monochrome document.
2-sided Scan	Select **On** to scan both sides of the document.
Brightness	Select the brightness level.
Contrast	Select the contrast level.
Continuous Scan	Scan more pages than the maximum capacity of the ADF and save them as one data file.
Port Number	Change the **Port Number** setting used to access the SFTP server. The default for this setting is port 22. In most cases this setting does not need to be changed.

8. Click **Submit**.

Related Information

- Scan to SSH Server (SFTP)

Related Topics:

- Access Web Based Management

Create a Client Key Pair Using Web Based Management

Related Models: ADS-1800W

1. Start your web browser.
2. Type "https://machine's IP address" in your browser's address bar (where "machine's IP address" is your machine's IP address).

   For example:

   https://192.168.1.2
3. If required, type the password in the **Login** field, and then click **Login**.

   The default password to manage this machine's settings is located on the bottom of the machine and marked "**Pwd**". Change the default password by following the on-screen instructions when you first log in.
4. In the left navigation bar, click **Network** > **Security** > **Client Key Pair**.

   If the left navigation bar is not visible, start navigating from ≡.
5. Click **Create New Client Key Pair**.
6. In the **Client Key Pair Name** field, type the name (up to 20 characters) you want.
7. Click the **Public Key Algorithm** drop-down list, and then select the algorithm you want.
8. Click **Submit**.

   The client key pair is created and saved in your machine's memory. The client key pair name and public key algorithm will be displayed in the **Client Key Pair List**.

Related Information

- Scan to SSH Server (SFTP)

Related Topics:

- Access Web Based Management

Export a Client Key Pair Using Web Based Management

Related Models: ADS-1800W

1. Start your web browser.
2. Type "https://machine's IP address" in your browser's address bar (where "machine's IP address" is your machine's IP address).

   For example:

   https://192.168.1.2
3. If required, type the password in the **Login** field, and then click **Login**.

   The default password to manage this machine's settings is located on the bottom of the machine and marked "**Pwd**". Change the default password by following the on-screen instructions when you first log in.
4. In the left navigation bar, click **Network** > **Security** > **Client Key Pair**.

   If the left navigation bar is not visible, start navigating from ≡.
5. Click **Export Public Key** shown with **Client Key Pair List**.
6. Click **Submit**.

The client key pair is exported to your computer.

Related Information

- Scan to SSH Server (SFTP)

Related Topics:

- Access Web Based Management

Import a Server Public Key Using Web Based Management

Related Models: ADS-1800W

1. Start your web browser.
2. Type "https://machine's IP address" in your browser's address bar (where "machine's IP address" is your machine's IP address).

   For example:

   https://192.168.1.2
3. If required, type the password in the **Login** field, and then click **Login**.

   The default password to manage this machine's settings is located on the bottom of the machine and marked "**Pwd**". Change the default password by following the on-screen instructions when you first log in.
4. In the left navigation bar, click **Network** > **Security** > **Server Public Key**.

   If the left navigation bar is not visible, start navigating from ≡.
5. Click **Import Server Public Key**.
6. Specify the file that you want to import.
7. Click **Submit**.

The server public key is imported to your machine.

Related Information

- Scan to SSH Server (SFTP)

Related Topics:

- Access Web Based Management

Upload Scanned Data to an SFTP Server

Related Models: ADS-1800W

1. Load your document.
2. Press ◀ or ▶ to display `[to FTP/SFTP]`, and press it.
3. The server profiles you have set up using Web Based Management are listed. Select the profile you want. If the profile is not complete (for example, if the logon account name and password are missing, or if the quality or file type is not specified), you will be prompted to enter any missing information.
4. Press `[Start]`.

   The machine starts scanning.

Related Information

- Scan to SSH Server (SFTP)

Scan to Network

Related Models: ADS-1800W

Scan documents directly to a CIFS server on your local network. For added convenience, you can configure different profiles to save your favourite Scan to Network destinations.

- Set up a Scan to Network Profile
- Upload Scanned Data to a CIFS Server

Set up a Scan to Network Profile

Related Models: ADS-1800W

Set up a Scan to Network Profile to scan and upload scanned data directly to a folder on a CIFS server.

- We recommend using the latest version of the following web browsers:
  - Microsoft Edge, Firefox, and Google Chrome™ for Windows
  - Safari, Firefox, and Google Chrome™ for Mac
  - Google Chrome™ for Android™
  - Safari and Google Chrome™ for iOS
- Ensure that JavaScript and Cookies are always enabled, regardless of which browser you use.

1. Start your web browser.
2. Type "https://machine's IP address" in your browser's address bar (where "machine's IP address" is the machine's IP address).

   For example:

   https://192.168.1.2
3. If required, type the password in the **Login** field, and then click **Login**.

The default password to manage this machine's settings is located on the bottom of the machine and marked "**Pwd**". Change the default password by following the on-screen instructions when you first log in.

4. In the left navigation bar, click **Scan** > **Scan to FTP/SFTP/Network/SharePoint**.

If the left navigation bar is not visible, start navigating from ≡.

5. Select the **Network** option, and then click **Submit**.

If you want to send the data to your designated folder on the CIFS server, select **On** for the **Send to My Folder** option.

6. Click the **Scan to FTP/SFTP/Network/SharePoint Profile** menu.
7. Select the profile you want to set up or change.

Using the following characters: ?, /, \, ", :, <, >, | or * may cause a sending error.

Option	Description
Profile Name	Type a name for this server profile (up to 14 alphanumeric characters). The machine displays this name on the LCD.
Network Folder Path	Type the path to the folder on the CIFS server where you want to send your scanned data.
File Name	Select a file name from the preset names provided, or from user-defined names. You can set the user-defined names and file name style in the **Scan File Name** menu in the navigation menu.
Quality	Select a quality setting. When **Auto** is selected, you can adjust the detection level of colour from the **Auto Color detect adjust** drop-down list.
File Type	Select the file type you want to use for the scanned document.
Document Size	Select your document size from the list. This is necessary to make sure the scanned file is the correct size.

Option	Description
Edge Fill for Plastic Card	When On is selected, the four edges of the scanned plastic card image are filled with white space. **Edge Fill for Plastic Card** is available only for scanning from the Card Slot.
Margin Settings	Adjust your document's margins.
File Size	Select your file size.
Skip Blank Page	Select the **On** option to remove blank pages of the document from the scanning results.
Skip blank page sensitivity	Select the sensitivity level for detecting blank pages in the scanned data. The higher the sensitivity, the easier it is for the machine to detect blank pages.
Document Separation	Split a scanned image. When multiple documents have been scanned, you can split up and save documents separately by using this function. You can also set the number of pages to split a document by.
Color/Gray TIFF Compression	Select the compression TIFF file type for a colour/grey document.
B&W TIFF Compression	Select the compression TIFF file type for a monochrome document.
2-sided Scan	Select **On** to scan both sides of the document.
Brightness	Select the brightness level.
Contrast	Select the contrast level.
Continuous Scan	Scan more pages than the maximum capacity of the ADF and save them as one data file.
Auth. Method	You can use **NTLMv2** only.
Username	Type a user name (up to 96 characters) that has permission to write data to the folder specified in the **Network Folder Path** field. If the user name is part of a domain, type the user name in one of the following styles: **user@domain** **domain\user**
Password	Type the password (up to 33 characters) associated with the user name you entered in the **Username** field. Type the password again in the **Retype password** field.

8. Click **Submit**.
9. You must configure the SNTP (network time server) or you must set the date, time and time zone correctly on the control panel. The time must match the time used by the CIFS Server.

Related Information

- Scan to Network

Related Topics:

- Access Web Based Management

Upload Scanned Data to a CIFS Server

Related Models: ADS-1800W

1. Load your document.
2. Press ◀ or ▶ to display `[to Network]`, and press it.

- If you registered your user ID, the `[to My Folder]` option appears when you log on to the machine using Active Directory Authentication or LDAP Authentication.
- To send scanned data to your designated folder on the CIFS server, press `[to My Folder]`.
- To enable this feature in Web Based Management, in the left navigation bar, click **Scan** > **Scan to FTP/SFTP/Network/SharePoint**. In the **Send to My Folder** field, select **On**.

3. The server profiles you have set up using Web Based Management are listed. Select the profile you want. If the profile is not complete (for example, if the logon account name and password are missing, or if the quality or file type is not specified), you will be prompted to enter any missing information.
4. Press `[Start]`.

   The machine starts scanning.

Related Information

- Scan to Network

Related Topics:

- Access Web Based Management

Scan to SharePoint

Related Models: ADS-1800W

Scan documents directly to a SharePoint server when you need to share the scanned information. For added convenience, configure different profiles to save your favourite Scan to SharePoint destinations.

- Set up a Scan to SharePoint Profile
- Upload Scanned Data to a SharePoint Server

Set up a Scan to SharePoint Profile

Related Models: ADS-1800W

Set up a Scan to SharePoint Profile to scan and upload the scanned data directly to a SharePoint location.

- We recommend using the latest version of the following web browsers:
  - Microsoft Edge, Firefox, and Google Chrome™ for Windows
  - Safari, Firefox, and Google Chrome™ for Mac
  - Google Chrome™ for Android™
  - Safari and Google Chrome™ for iOS
- Ensure that JavaScript and Cookies are always enabled, regardless of which browser you use.

1. Start your web browser.
2. Type "https://machine's IP address" in your browser's address bar (where "machine's IP address" is the machine's IP address).

   For example:

   https://192.168.1.2
3. If required, type the password in the **Login** field, and then click **Login**.

The default password to manage this machine's settings is located on the bottom of the machine and marked "**Pwd**". Change the default password by following the on-screen instructions when you first log in.

4. In the left navigation bar, click **Scan** > **Scan to FTP/SFTP/Network/SharePoint**.

If the left navigation bar is not visible, start navigating from ≡.

5. Select the **SharePoint** option, and then click **Submit**.
6. Click the **Scan to FTP/SFTP/Network/SharePoint Profile** menu.
7. Select the profile you want to set up or change.

Using the following characters: ?, /, \, ", :, <, >, | or * may cause a sending error.

Option	Description
Profile Name	Type a name for this server profile (up to 14 alphanumeric characters). The machine displays this name on the LCD.
Network Folder Path	Copy and paste the full destination address shown in the address bar of your browser (for example: http://SharePointSiteAddress/Shared%20Documents/Forms/AllItems.aspx) or the IP address (for example: http://192.168.0.1/Shared%20Documents/Forms/AllItems.aspx).
SSL/TLS	If the address in the **Network Folder Path** field starts with "https://", you can verify the server certificate by selecting the **Verify Server Certificate** checkbox.
File Name	Select a file name from the preset names provided, or from user-defined names. You can set the user-defined names and file name style in the **Scan File Name** menu in the navigation menu.
Quality	Select a quality setting. When **Auto** is selected, you can adjust the detection level of colour from the **Auto Color detect adjust** drop-down list.
File Type	Select the file type you want to use for the scanned document.

Option	Description
Document Size	Select your document size from the list. This is necessary to make sure the scanned file is the correct size.
Edge Fill for Plastic Card	When On is selected, the four edges of the scanned plastic card image are filled with white space. **Edge Fill for Plastic Card** is available only for scanning from the Card Slot.
Margin Settings	Adjust your document's margins.
File Size	Select your file size.
Skip Blank Page	Select the **On** option to remove blank pages of the document from the scanning results.
Skip blank page sensitivity	Select the sensitivity level for detecting blank pages in the scanned data. The higher the sensitivity, the easier it is for the machine to detect blank pages.
Document Separation	Split a scanned image. When multiple documents have been scanned, you can split up and save documents separately by using this function. You can also set the number of pages to split a document by.
Color/Gray TIFF Compression	Select the compression TIFF file type for a colour/grey document.
B&W TIFF Compression	Select the compression TIFF file type for a monochrome document.
2-sided Scan	Select **On** to scan both sides of the document.
Brightness	Select the brightness level.
Contrast	Select the contrast level.
Continuous Scan	Scan more pages than the maximum capacity of the ADF and save them as one data file.
Auth. Method	Select the authentication method. If you select **Auto**, the authentication method will be automatically detected.
Username	Type a user name (up to 96 characters) that has permission to write data to the folder specified in the **Network Folder Path** field. If the user name is part of a domain, type the user name in one of the following styles: **user@domain** **domain\user**
Password	Type the password (up to 33 characters) associated with the user name you entered in the **Username** field. Type the password again in the **Retype password** field.
Kerberos Server Address	Type the Kerberos Server Address (for example: kerberos.example.com; up to 64 characters).

8. Click **Submit**.

Related Information

- Scan to SharePoint

Related Topics:

- Access Web Based Management

Upload Scanned Data to a SharePoint Server

Related Models: ADS-1800W

1. Load your document.
2. Press [to SharePoint].
3. The server profiles you have set up using Web Based Management are listed. Select the profile you want. If the profile is not complete (for example, if the logon account name and password are missing, or if the quality or file type is not specified), you will be prompted to enter any missing information.
4. Press [Start].

   The machine starts scanning.

Related Information

- Scan to SharePoint

Use the Web Services Protocol for Network Scanning (Windows 10 and Windows 11)

Related Models: ADS-1350W/ADS-1800W

The Web Services protocol enables Windows 10 and Windows 11 users to scan using a Brother machine on the network. You must install the driver via Web Services.

- Use the Web Services Protocol to Install the Scanner Driver (Windows 10 and Windows 11)
- Scan Using Web Services from the Brother Machine (Windows 10 and Windows 11)
- Configure Scan Settings for the Web Services Protocol

Use the Web Services Protocol to Install the Scanner Driver (Windows 10 and Windows 11)

Related Models: ADS-1350W/ADS-1800W

- Make sure you have installed the correct software and drivers for your machine.
- Verify that the host computer and the Brother machine are on the same subnet, or that the router is correctly configured to pass data between the two devices.
- You must configure the IP address on your Brother machine before you configure this setting.

1. Hold down the [⊞] key and press the [R] key on the computer's keyboard to launch **Run**.
2. Type **"control printers"** in the **Open:** field and click **OK**.

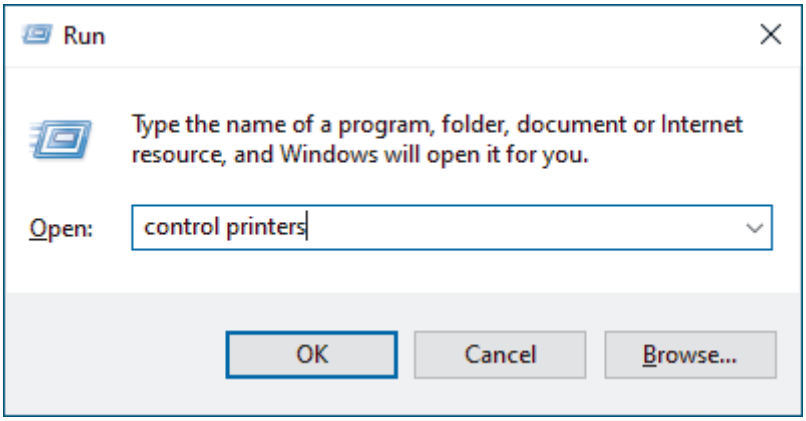

The **Devices and Printers** window appears.

If the **Devices and Printers** window does not appear, click **View more devices** > **More devices and printer settings**.

3. Click **Add a device**.

The Web Services Name for the Brother machine is your model's name and the MAC Address.

4. Select the machine you want to install, and then follow the on-screen instructions.

To uninstall the drivers, click **Remove device**.

Related Information

- Use the Web Services Protocol for Network Scanning (Windows 10 and Windows 11)

Scan Using Web Services from the Brother Machine (Windows 10 and Windows 11)

Related Models: ADS-1350W/ADS-1800W

>> ADS-1350W
>> ADS-1800W

ADS-1350W

If you have installed the driver for scanning via Web Services, you can use Web Services for scanning by pressing ①.

Before scanning, start Web Based Management and in the left navigation bar, click **Scan** > **Scan Destination**. In the **Button 1** field, select the **WS Scan** option.

1. Load your document.
2. Press ① to which you have assigned the Web Service Scan feature.

   The machine starts scanning.

ADS-1800W

If you have installed the driver for scanning via Web Services, you can access the Web Services scanning menu on your Brother machine's LCD.

Certain characters in the messages displayed on the LCD may be replaced with spaces if the language settings in your operating system are different from those on your Brother machine.

1. Load your document.
2. Press ◀ or ▶ to display `[WS Scan]`, and press it.
3. Press the type of scan you want to perform.
4. Press ▲ or ▼ to display the computer name where you want to send the data, and then press the computer name.
5. Press `[Start]`.

   The machine starts scanning.

Related Information

- Use the Web Services Protocol for Network Scanning (Windows 10 and Windows 11)

Configure Scan Settings for the Web Services Protocol

Related Models: ADS-1350W/ADS-1800W

1. Hold down the key and press the R key on the computer's keyboard to launch **Run**.
2. Type **"control printers"** in the **Open:** field and click **OK**.

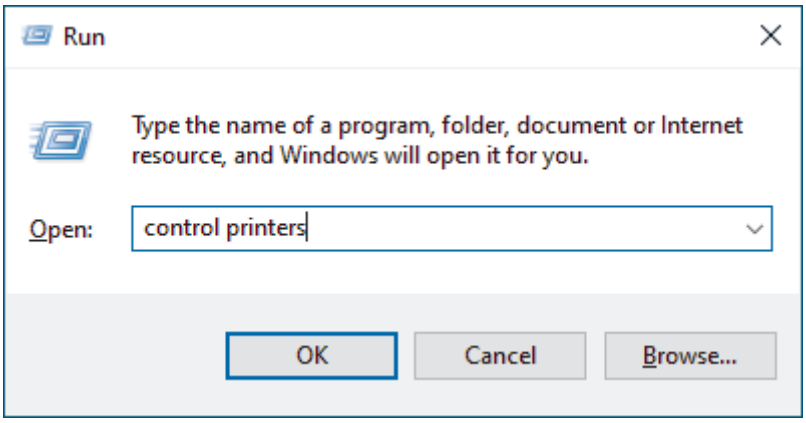

The **Devices and Printers** window appears.

If the **Devices and Printers** window does not appear, click **View more devices** > **More devices and printer settings**.

3. Right-click the machine icon, and then select **Scan profiles…**. The **Scan Profiles** dialog box appears.
4. Select the scan profile you want to use.
5. Make sure the scanner selected in the **Scanner** list is a machine that supports Web Services for scanning, and then click the **Set as Default** button.
6. Click **Edit…**.

   The **Edit Default Profile** dialog box appears.
7. Select the **Source**, **Paper size**, **Color format**, **File type**, **Resolution (DPI)**, **Brightness** and **Contrast** settings.
8. Click the **Save Profile** button.

   These settings will be applied when you scan using the Web Services protocol.

If the machine prompts you to select a scanning application, select Windows Fax and Scan from the list.

Related Information

- Use the Web Services Protocol for Network Scanning (Windows 10 and Windows 11)

Change the Scan Button Settings from Brother iPrint&Scan

Brother iPrint&Scan allows you to change the machine's Scan Button settings.

>> ADS-1300/ADS-1350W
>> ADS-1800W

ADS-1300/ADS-1350W

1. Start Brother iPrint&Scan.
   - Windows:

     Double-click the (**Brother iPrint&Scan**) icon on your computer's desktop.

     For more information, see *Related Information*.
   - Mac:

     In the **Finder** menu bar, click **Go** > **Applications**, and then double-click the iPrint&Scan icon.

   The Brother iPrint&Scan screen appears.

NOTE

To download the latest application:

- For Windows:

  Go to your model's **Downloads** page at support.brother.com/downloads, and then download and install Brother iPrint&Scan.
- For Mac:

  Download and install Brother iPrint&Scan from the Apple App Store.

2. If your Brother machine is not selected, click the **Select your Machine** button, and then follow the on-screen instructions to select your Brother machine.
3. Click the **Machine Scan Settings** button, and then follow the on-screen instructions.

   The **Feature Introduction** window appears.
4. Do one of the following:
   - When connecting using a USB cable:

     Click **Next**.
   - (ADS-1350W) When connecting via Network:
     a. Click **Set Scan Destination**.

        The Web Based Management window appears.
     b. Follow the on-screen instructions to configure or confirm the **Scan Destination** settings.
     c. Go back to the **Feature Introduction** window and select the **Scan Destination Confirmed** checkbox.
     d. Click **Next**.
5. When the **Machine Scan Settings** window appears, select the Button for which you want to configure the scan settings. Settings can include document size, colour, and resolution.
6. To change the Scan Destination settings using Remote Setup or Web Based Management, such as assigning Button 1 and Scan Destination, click **Set Scan Destination**, and then follow the on-screen instructions.

ADS-1800W

1. Start Brother iPrint&Scan.
   - Windows:

     Double-click the (**Brother iPrint&Scan**) icon on your computer's desktop.

For more information, see *Related Information*.

- Mac:

  In the **Finder** menu bar, click **Go** > **Applications**, and then double-click the iPrint&Scan icon.

The Brother iPrint&Scan screen appears.

NOTE

To download the latest application:

- For Windows:

  Go to your model's **Downloads** page at support.brother.com/downloads, and then download and install Brother iPrint&Scan.

- For Mac:

  Download and install Brother iPrint&Scan from the Apple App Store.

2. If your Brother machine is not selected, click the **Select your Machine** button, and then follow the on-screen instructions to select your Brother machine.
3. Click the **Machine Scan Settings** button, and then follow the on-screen instructions to change the scan settings, such as document size, colour, and resolution.

Related Information

- Scan Using the Scan Functions on Your Brother Machine

Related Topics:

- Access Brother iPrint&Scan (Windows/Mac)
- Change the Machine Settings Using Remote Setup
- Access Web Based Management

Restrict Scan Functions from External Devices

Related Models: ADS-1350W/ADS-1800W

This feature allows you to restrict scan functions from external devices.

- We recommend using the latest version of the following web browsers:
  - Microsoft Edge, Firefox, and Google Chrome™ for Windows
  - Safari, Firefox, and Google Chrome™ for Mac
  - Google Chrome™ for Android™
  - Safari and Google Chrome™ for iOS
- Ensure that JavaScript and Cookies are always enabled, regardless of which browser you use.

1. Start your web browser.
2. Type "https://machine's IP address" in your browser's address bar (where "machine's IP address" is the machine's IP address).

   For example:

   https://192.168.1.2
3. If required, type the password in the **Login** field, and then click **Login**.

The default password to manage this machine's settings is located on the bottom of the machine and marked "**Pwd**". Change the default password by following the on-screen instructions when you first log in.

4. In the left navigation bar, click **Scan** > **Scan from PC**.

If the left navigation bar is not visible, start navigating from ≡.

5. Disable the **Pull Scan** option.
6. Click **Submit**.

Related Information

- Scan Using the Scan Functions on Your Brother Machine

Related Topics:

- Access Web Based Management

Scan Using Brother iPrint&Scan (Windows/Mac)

1. Load your document.
2. Start Brother iPrint&Scan.
   - Windows:

     Double-click the (**Brother iPrint&Scan**) icon on your computer's desktop.

     For more information, see *Related Information*.
   - Mac:

     In the **Finder** menu bar, click **Go** > **Applications**, and then double-click the iPrint&Scan icon.

   The Brother iPrint&Scan screen appears.

NOTE

To download the latest application:

- For Windows:

  Go to your model's **Downloads** page at support.brother.com/downloads, and then download and install Brother iPrint&Scan.
- For Mac:

  Download and install Brother iPrint&Scan from the Apple App Store.

3. If your Brother machine is not selected, click the **Select your Machine** button, and then select your model's name from the list. Click **OK**.
4. Click the **Scan** icon.
5. Configure the scan settings, and then click the **Scan** button to start scanning.
6. After all the documents have been scanned, select the option for saving and sharing scanned data.
7. Configure detailed settings, including the **File Name** and the **File Type**.

To combine multiple scans into a file, select PDF as the **File Type**.

8. Complete the scanning process.

Related Information

- Scan
  - Configure Scan to Workflow Settings Using Brother iPrint&Scan

Related Topics:

- Access Brother iPrint&Scan (Windows/Mac)

Configure Scan to Workflow Settings Using Brother iPrint&Scan

The following conditions must be satisfied to use Scan to Workflow:

- Windows
  - The scanner driver is installed.

    Download and install the driver at support.brother.com/downloads.
  - Default settings have been configured for scanning from the machine.

    Configure the settings by following the on-screen directions in the **Machine Scan Settings** screen.
- Mac
  - **iPrint&Scan Push Scan Tool** is installed.

    Download and install the **iPrint&Scan Push Scan Tool** at support.brother.com/downloads.
  - Default settings have been configured for scanning from the machine.

    In the Brother iPrint&Scan home screen, click **Machine Scan Settings** > **Select folder...**, and save where applicable. Complete the process by following the on-screen instructions.

>> Create a Workflow
>> Configure Workflows
>> Edit or delete the Workflow

Create a Workflow

1. In the Brother iPrint&Scan home screen, click **Create Workflow**.
2. Create a workflow by following the on-screen instructions.

If you want to scan from your machine, check the **Set this workflow. It can be started from the control panel of your machine.** checkbox before clicking the **Save** button.

Configure Workflows

1. In the Brother iPrint&Scan home screen, click **Machine Scan Settings** > **Workflow**.
2. Select the workflow you want to display when the Workflow button is pressed on the machine, and click **OK**.

Edit or delete the Workflow

1. In the Brother iPrint&Scan home screen, click **Application Setting** > **Workflow Management**.
2. Select the workflow you want to edit or delete, and click either **Edit** or **Delete**.

Related Information

- Scan Using Brother iPrint&Scan (Windows/Mac)

Related Topics:

- Save Scanned Documents Using Scan to Workflow Function

Scan from Your Computer (Windows)

There are several ways you can use your computer to scan photos and documents on your machine. Use the software applications we provide or use your favourite scanning application.

- Scan Using Nuance™ PaperPort™ 14SE or Other Windows Applications
- Scan Using Windows Fax and Scan

Scan Using Nuance™ PaperPort™ 14SE or Other Windows Applications

You can use the Nuance™ PaperPort™ 14SE application for scanning.

- To download the Nuance™ PaperPort™ 14SE application, click (**Brother Utilities**), select **Do More** in the left navigation bar, and then click **PaperPort**.
- For detailed instructions on using each application, click the application's **Help** menu, and then click **Getting Started Guide** in the **Help** ribbon.

The instructions for scanning in these steps are for Nuance™ PaperPort™ 14SE. For other Windows applications, the steps will be similar. Nuance™ PaperPort™ 14SE supports both TWAIN and WIA drivers; the TWAIN driver (recommended) is used in these steps.

1. Load your document.
2. Start PaperPort™ 14SE.

   Do one of the following:

   - Windows 11

     Click > **All apps** > **Nuance PaperPort 14** > **PaperPort**.
   - Windows 10

     Click > **Nuance PaperPort 14** > **PaperPort**.
3. Click the **Desktop** menu, and then click **Scan Settings** in the **Desktop** ribbon.

   The **Scan or Get Photo** panel appears on the left side of the screen.
4. Click **Select**.
5. From the available Scanners list, select your model with **TWAIN:TW** in the name. To use the WIA driver, select the Brother driver that has "WIA" as the prefix.
6. Click **OK**.
7. Select the **Display scanner dialog box** checkbox in the **Scan or Get Photo** panel.
8. Click **Scan**.

   The Scanner Setup dialog box appears.

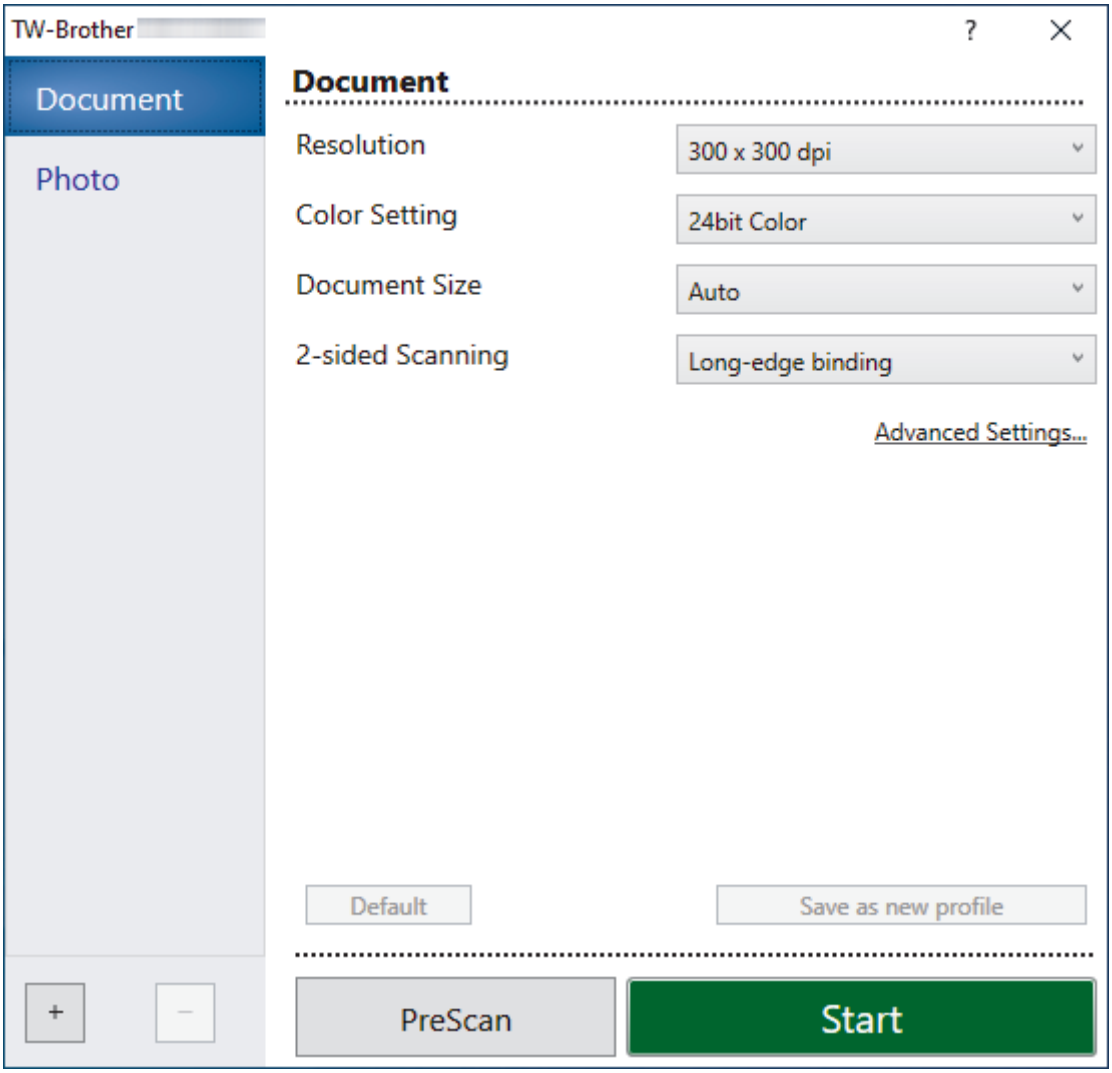

9. Adjust the settings in the Scanner Setup dialog box, if needed.
10. Click the **Document Size** drop-down list, and then select your document size.
11. Click **PreScan** to preview your image and crop unwanted portions before scanning.
12. Click **Start**.

    The machine starts scanning.

Related Information

- Scan from Your Computer (Windows)
  - TWAIN Driver Settings (Windows)

TWAIN Driver Settings (Windows)

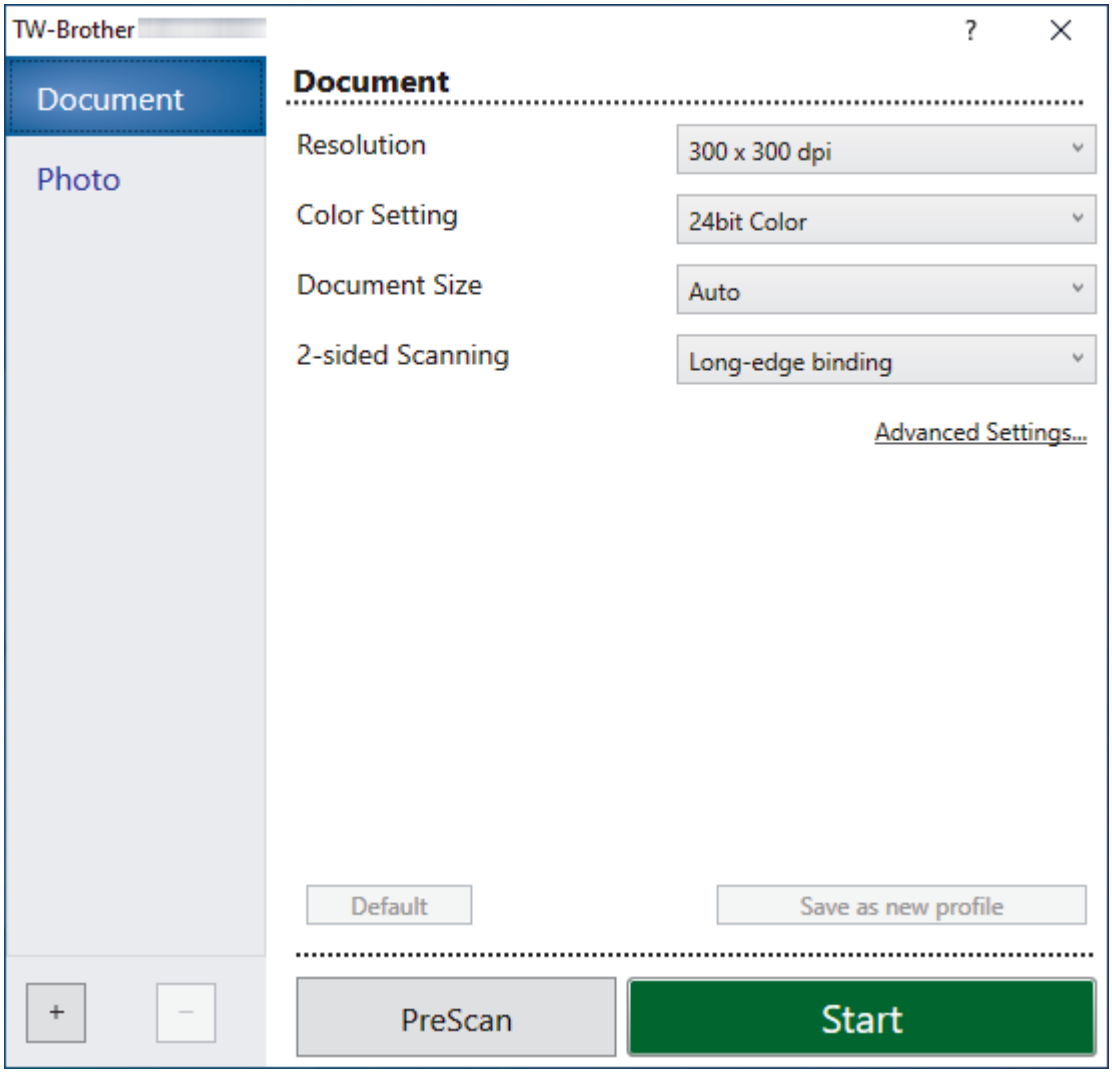

- Note that the item names and assignable values will vary depending on the machine.
- Load only one document per scanning sequence when **Long Paper** or **Carrier Sheet Mode** is selected.

1. **Scan**

   Select the **Photo** or **Document** option depending on the type of document you want to scan.

Scan (Image Type)		Resolution	Colour Setting
Document	Use for scanning text documents.	300 x 300 dpi	**24bit Colour**
Photo	Use for scanning photo images.	300 x 300 dpi	**24bit Colour**

2. **Resolution**

   Select a scanning resolution from the **Resolution** drop-down list. Higher resolutions produce a finer scanned image but consume more memory and increase transfer time.

   Long Paper is available for scanning at resolutions below 300 x 300 dpi.

3. **Color Setting**

   Select from a range of scan colour depths.

- **Auto**

  Automatically detects whether the document uses colour and generates a scanned image of it. For documents that mix colour and monochrome pages, colour pages will be scanned in Colour mode, while monochrome pages will be scanned in **Black & White** mode.
- **Black & White**

  Use for text or line art images.
- **Grey (Error Diffusion)**

  Use for photographic images or graphics. (Error Diffusion is a method for creating simulated greyscale images without using true grey dots. Black dots are put in a specific pattern to give a grey appearance.)
- **True Grey**

  Use for photographic images or graphics. This mode is more accurate because it uses up to 256 shades of grey.
- **24bit Colour**

  Use to create an image with the most accurate colour reproduction. This mode uses up to 16.8 million colours to scan the image, but it requires the most memory and has the longest transfer time.

4. **Document Size**

   Select the exact size of your document from a selection of preset scan sizes. If you select **Custom**, the **Custom Document Size** dialog box appears and you can specify the document size.

   (ADS-1300) **Auto** is not available for scanning at resolutions greater than 400 x 400 dpi.

5. **2-sided Scanning**

   Scan both sides of the document. Select **Long-edge binding** or **Short-edge binding** depending on the layout of your original to make sure the data file created appears correctly in the scanned document.

   2-sided Scanning is not available for **Long Paper**.

2-sided Scan Setting	Original Layout	Scan Result
Long-edge binding	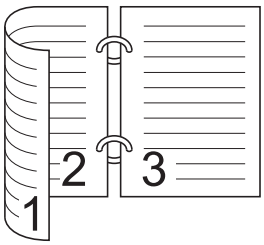	
Short-edge binding	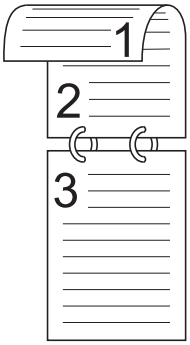	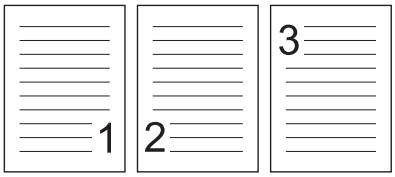

6. **Advanced Settings**

   Configure advanced settings by clicking the **Advanced Settings** link in the Scanner Setup dialog box.
   - **Document Correction**
     - **Cropping**
       - **Auto Deskew**

         Set the machine to correct document skewing automatically.

- **Auto Deskew** feature is automatically set to On if you select **Auto** for the **Document Size**.
- (ADS-1300) **Auto Deskew** is not available for scanning at resolutions greater than 400 x 400 dpi.

  - **Detect End of Page (ADF)**

    Detects the end of page and automatically adjusts the size of a page when the length of the document is shorter than the **Document Size** selected.
  - **Margin Settings**

    This feature allows you to add or remove a specific margin (from -2 mm to 4 mm) at the edge of the image. A positive value increases the size of the scanned image when it is output and a negative value decreases the size of the scanned image when it is output.

Margin Settings is available only when **Document Size** is set to **Auto**.

- **Rotate Image**

  Changes the direction of the document based on the text orientation.
- **Fill With Color**

  Edge Fill

  Fill in the edges on four sides of the scanned image using the selected colour and range.
- **Punch Hole Removal**

  This feature removes the punch hole markings by filling hole marks with white or the surrounding colour.
- **Auto Colour Detect Adjust**

  When colour setting **Auto** is selected, you can adjust the detection level of colour. Increasing the slider value makes the machine more likely to determine that a given document is a colour document.
- **Skip Blank Page**

  Remove the document's blank pages from the scanning results.

- **Enhancement**
  - **Diffusion Adjustment -Grey**

    This function adjusts the brightness and contrast to create grey images.

Only effective when the **Color Setting** is **Grey (Error Diffusion)**.

Brightness

Set the **Brightness** level by moving the slider to the right or left to lighten or darken the image. If the scanned image is too light, set a lower brightness level and scan the document again. If the image is too dark, set a higher brightness level and scan the document again. You can also type a value in the field to set the brightness.

Contrast

Increase or decrease the **Contrast** level by moving the slider to the right or left. An increase emphasises dark and light areas of the image, while a decrease reveals more details in grey areas. You can also type a value in the field to set the contrast.

- **Colour Tone Adjustment**

  Allows you to adjust the brightness, contrast, shadow, highlight, and gamma during True grey and colour scanning.
- **Background Processing**
  - **Remove Bleed-through / Pattern**

    Prevent bleed-through.
  - **Remove Background Colour**

    Remove the base colour of documents to make the scanned data more legible.
- **Colour Drop**

  Select a colour to remove from the scanned image.

- **Edge Emphasis**

  Make the characters of the original sharper.
- **Moire Reduction**

  Reduce the moiré pattern, or cross-hatching, in a scanned image.

The following items can be selected when scanning colour or grey images:

- **Colour Tone Adjustment**
- **Edge Emphasis**

- **B&W Image Quality**
  - **B&W Threshold Adjustment**

    This setting allows you to adjust the image quality when scanning in **Black & White** mode. Larger values increase the amount of black in the scanned image, while smaller values increase the amount of white.
  - **Character Correction**

    Correct any broken or incomplete characters in the original to make them easier to read.

Character Correction can be selected when scanning monochrome images.

  - **B&W Inversion**

    This feature allows you to create a monochrome inverted version of the scanned image.
  - **Noise Reduction**

    You can improve and enhance the quality of your scanned images with this selection. The **Noise Reduction** setting is available when a document size other than **Long Paper** is selected in **Black & White** mode.
  - **Remove Ruled Line**

    This feature allows you to remove lines in the document. You can select the type of line direction to remove (**Vertical**, **Horizontal**, **Vertical and Horizontal**).
    - **Minimum Line Length**

      Lines longer than or equal to the specified length are removed.
    - **Maximum Clearance**

      If lines are broken, for example due to fading of the image, the lines that are broken for an interval less than or equal to the specified broken line distance will be detected and removed.

Original Document	Scan Result	Description
There are horizontal and vertical lines.		If you select **Vertical**, the vertical line is removed.
		If you select **Horizontal**, the horizontal line is removed.
		If you select **Vertical and Horizontal**, all lines are removed.

- **Feed Control**
  - **Layout**

    Allows you to scan a two-page document combined into one page, or scan a one-page document divided into two pages.

Choose one of the following options:

Option	Description
2in1: **Long Edge**	Combine a two-page document into a single page using landscape orientation. 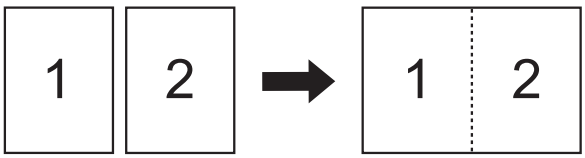
2in1: **Short Edge**	Combine a two-page document into a single page using portrait orientation. 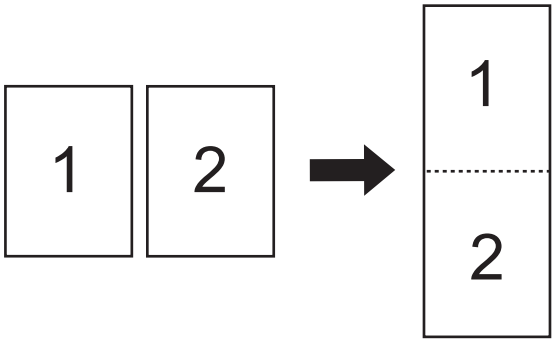
1 to 2: **Long Edge**	Divide a one-page document into two pages using portrait orientation. 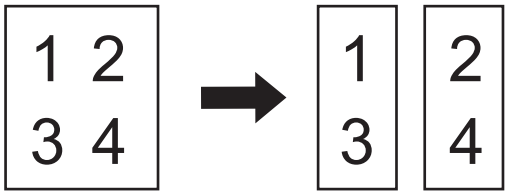
1 to 2: **Short Edge**	Divide a one-page document into two pages using landscape orientation. 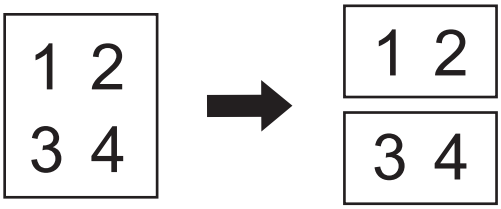

- **Carrier Sheet Mode**

  Use the optional Carrier Sheet to scan the following document types:

  - Important documents (photos, contracts)
  - Thin paper (receipts)
  - Irregularly-shaped paper (clippings)
- **Single Page Scan**

  Scans one page at a time from the ADF, regardless of the number of pages in the ADF.
- **Continuous Scan**

  Select this option to scan additional documents using the same settings when a scan has been completed. It is useful when you are scanning more documents than the ADF can hold or when you are scanning several documents at once.

(ADS-1300/ADS-1350W) **Auto** is available only when using the USB connection.

- **Additional Functions**
  - **Barcode Detection**

The machine reads the barcode printed on the scanned image. Specify the barcode type and detection area.

- **Barcode Detection** is available when **Layout** is Off.
- To scan and read barcodes, use a third-party application. The TWAIN driver alone cannot convert barcodes into data.

- **JPEG Compression**

  Changes the quality of the JPEG file to be saved.

This function is available only when using a third-party application with Disk File mode.

- **Digital Imprinter**

  Add the date, time, document count, or other custom text on your scanned image.

Related Information

- Scan Using Nuance™ PaperPort™ 14SE or Other Windows Applications

Scan Using Windows Fax and Scan

Windows Fax and Scan application is another option that you can use for scanning.

Windows Fax and Scan uses the WIA scanner driver.

1. Load your document.
2. Launch Windows Fax and Scan.
3. Click **File** > **New** > **Scan**.
4. Select the scanner you want to use.
5. Click **OK**.

   The **New Scan** dialog box appears.

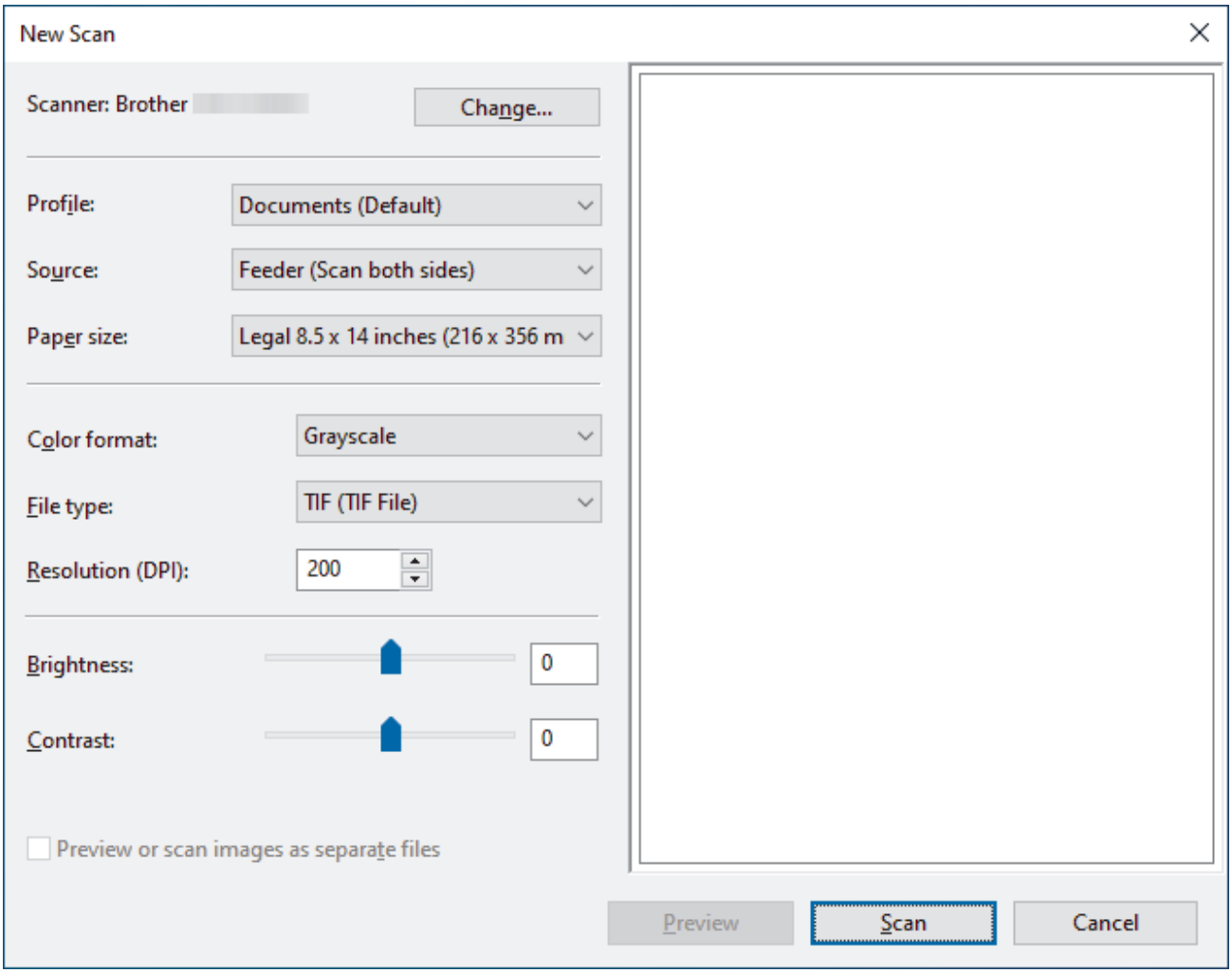

6. Adjust the settings in the dialog box, if needed.
7. Click **Scan**.

   The machine starts scanning.

Related Information

- Scan from Your Computer (Windows)
  - WIA Driver Settings (Windows)

WIA Driver Settings (Windows)

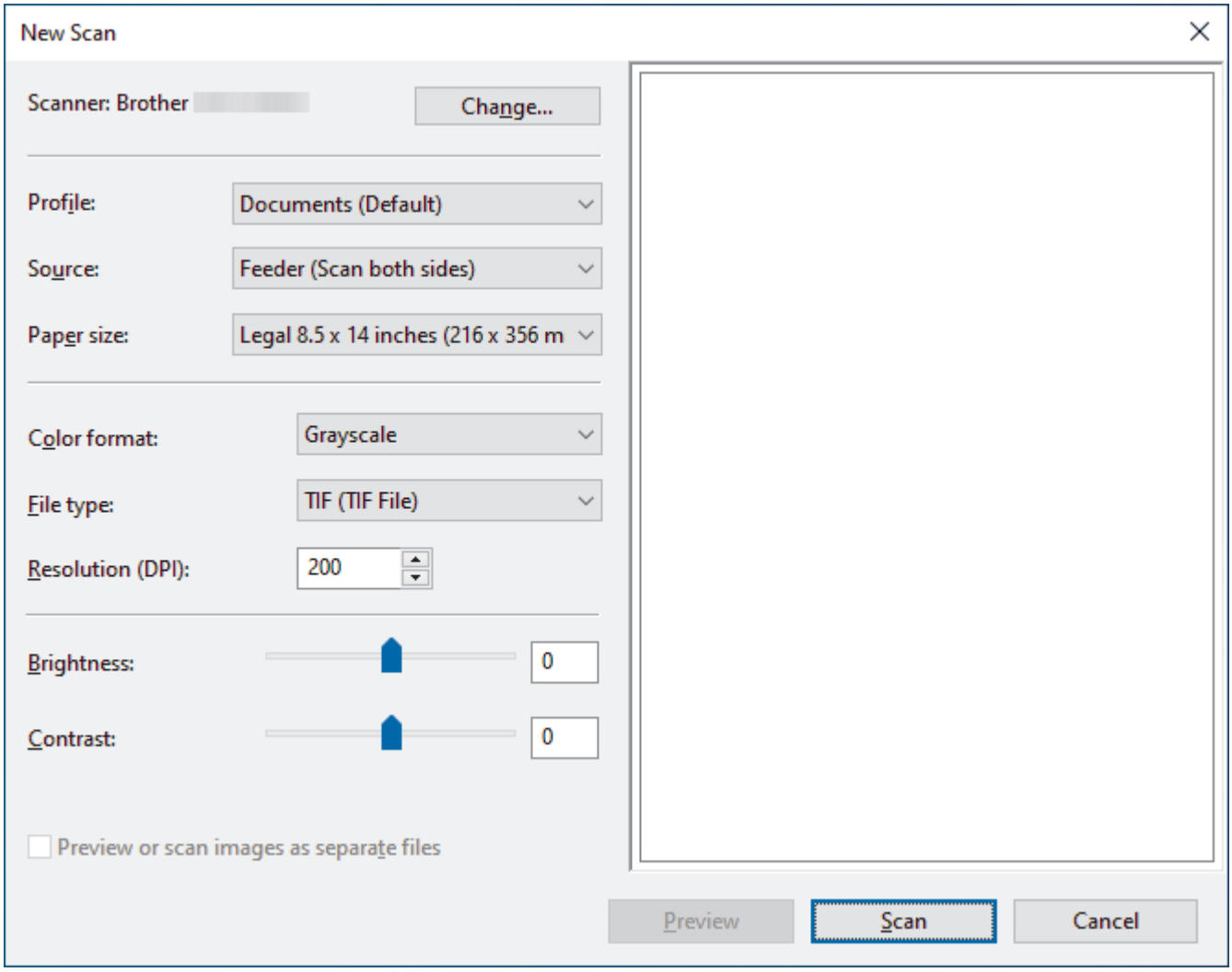

Profile

Select the scan profile you want to use from the **Profile** drop-down list.

Source

Select the **Feeder (Scan one side)** or **Feeder (Scan both sides)** option from the **Source** drop-down list.

Paper size

Select a paper size from the **Paper size** drop-down list.

Colour format

Select a scan colour format from the **Colour format** drop-down list.

File type

Select a file format from the **File type** drop-down list.

Resolution (DPI)

Set a scanning resolution in the **Resolution (DPI)** field. Higher resolutions take more memory and transfer time, but produce a finer scanned image.

Brightness

Set the **Brightness** level by dragging the slider to the right or left to lighten or darken the image. If the scanned image is too light, set a lower brightness level and scan the document again. If the image is too dark,

set a higher brightness level and scan the document again. You can also type a value in the field to set the brightness level.

Contrast

Increase or decrease the **Contrast** level by moving the slider to the right or left. An increase emphasises dark and light areas of the image, while a decrease reveals more details in grey areas. You can also type a value in the field to set the contrast level.

Related Information

- Scan Using Windows Fax and Scan

Scan from Your Computer (Mac)

There are several ways you can use your Mac to scan documents on your Brother machine. Use the software applications provided by Brother or your favourite scanning application.

- Scan Using Apple Image Capture (ICA Driver)
- Using AirPrint Scanning

Scan Using Apple Image Capture (ICA Driver)

Related Models: ADS-1300

Download and install the ICA driver at support.brother.com/downloads. You can also scan directly using the **Image Capture** application.

Related Information

- Scan from Your Computer (Mac)
  - Scan Using Apple Image Capture
  - ICA Driver Settings

Scan Using Apple Image Capture

Related Models: ADS-1300

1. Launch the **Image Capture** application.
2. Select the machine from the list on the left side of the screen.

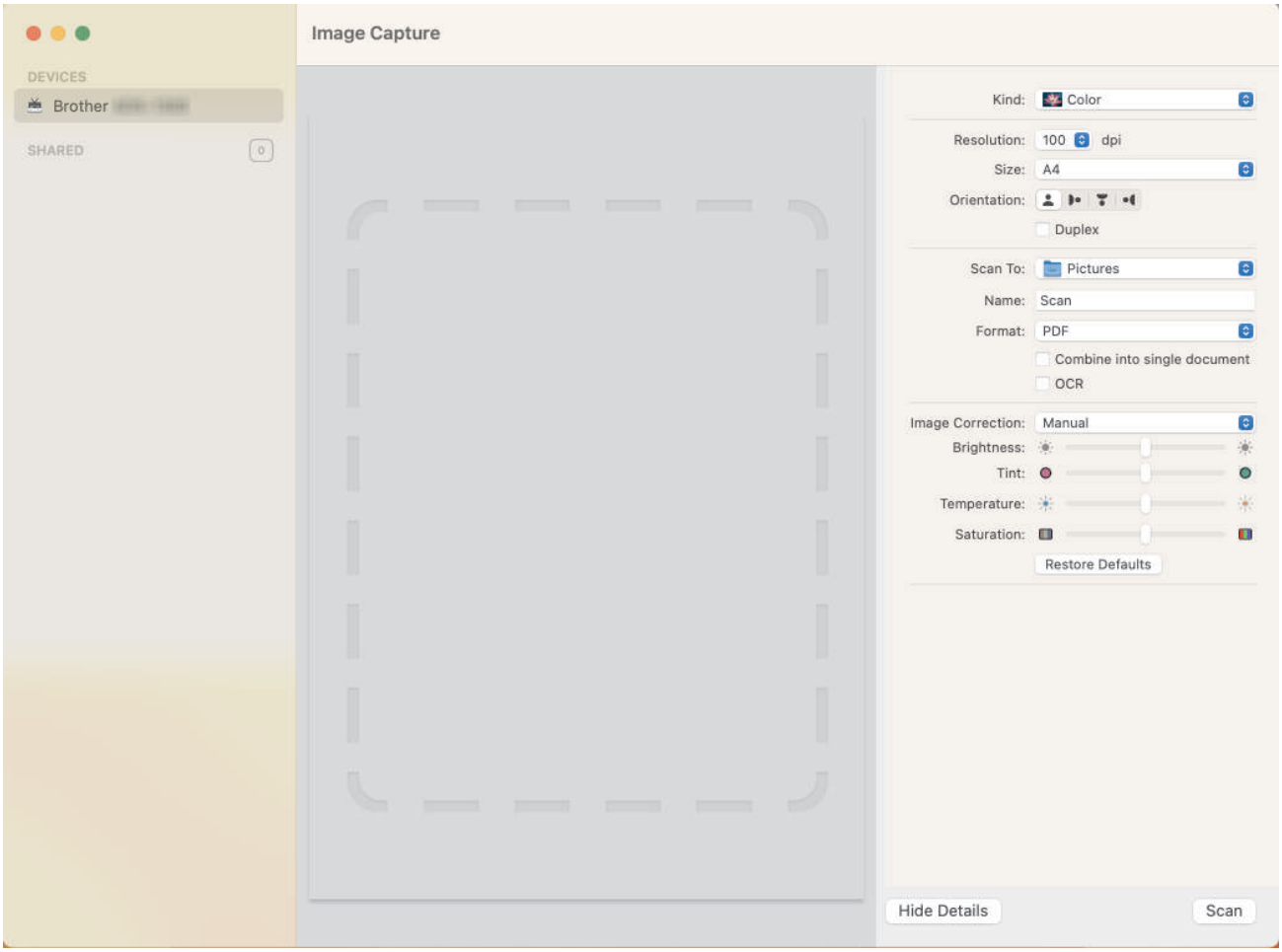

3. Load your document.
4. Select the size of your document.
5. Select the destination folder or destination application from the **Scan To** pop-up menu.
6. Click **Scan**.

   The machine starts scanning.

Related Information

- Scan Using Apple Image Capture (ICA Driver)

ICA Driver Settings

Related Models: ADS-1300

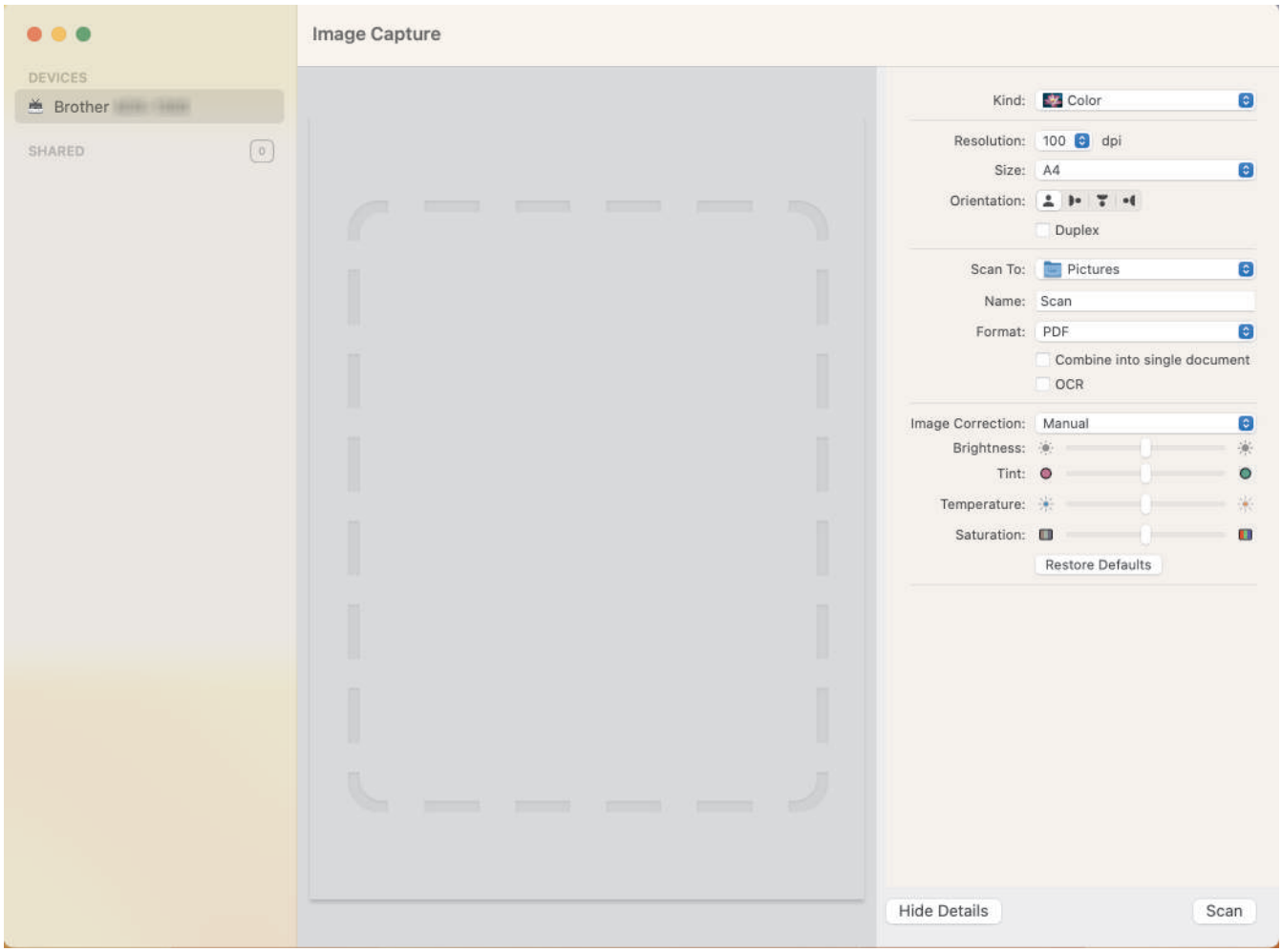

To adjust image capture settings, click **Show Details**.

Item names and assignable values may vary depending on the machine.

1. **Kind**

   Allows you to select from **Colour**, **Black&White**, or **Text**.
2. **Resolution**

   Specifies the document resolution you want.
3. **Scan Size/Size**

   Specifies the paper size of the document.
4. **Orientation**

   Specifies the orientation of the document.
5. **Duplex (supported models only)**

   Allows you to select the **Duplex** checkbox to perform 2-sided (duplex) scanning.
6. **Scan To**

   Specifies the destination folder or destination application.
7. **Name**

   Allows you to enter the prefix text used for the name of the scanned image.

8. **Format**

   Specifies the file format of the scanned data.

9. **Combine into single document**

   Allows you to scan a document as one item and save it as one file when selecting PDF or TIFF for the file format.

10. **OCR (supported macOS versions only)**

    Allows you to scan text to make it editable when selecting PDF as the file format.

11. **Image Correction**

    Depending on the **Kind** option selected, it allows you to configure the following settings:

Kind	Configurable Settings
Colour	**Brightness**, **Tint**, **Temperature**, **Saturation**
Black&White	**Brightness**, **Contrast**
Text	**Threshold**

Related Information

- Scan Using Apple Image Capture (ICA Driver)

Using AirPrint Scanning

Related Models: ADS-1350W/ADS-1800W

- Before Using AirPrint Scanning
- Scan Using AirPrint Scanning

Before Using AirPrint Scanning

Related Models: ADS-1350W/ADS-1800W

Before using AirPrint Scanning, add your Brother machine to the scanner list on your Mac.

- To use this feature, make sure your machine has the latest firmware. To check for the latest firmware upgrade, visit support.brother.com/downloads.
- Make sure your Brother machine and Mac are connected either wirelessly or via a USB cable.

1. Do one of the following:
   - macOS v13

     Select **System Settings** from the Apple menu.
   - macOS v12 and macOS v11

     Select **System Preferences** from the Apple menu.
2. Select **Printers & Scanners**.
3. Do one of the following:
   - macOS v13

     Click **Add Printer, Scanner, or Fax…**.
   - macOS v12 and macOS v11

     Click the + icon below the Printers pane on the left.

   The **Add Printer** screen appears.
4. Do one of the following:
   - macOS v13 and macOS v12

     Select your machine, and then select your model's name from the **Use** pop-up menu.
   - macOS v11

     Select your machine, and then select **AirPrint** from the **Use** pop-up menu.
5. Click **Add**.

Related Information

- Using AirPrint Scanning

Scan Using AirPrint Scanning

Related Models: ADS-1350W/ADS-1800W

Before scanning, make sure your Brother machine is in the scanner list on your Mac.

1. Load your document.
2. Do one of the following:
   - macOS v13
     Select **System Settings** from the Apple menu.
   - macOS v12 and macOS v11
     Select **System Preferences** from the Apple menu.
3. Select **Printers & Scanners**.
4. Select your machine from the scanner list.
5. Do one of the following:
   - macOS v13
     Click the **Open Scanner…** button.
   - macOS v12 and macOS v11
     Click the **Scan** tab, and then click the **Open Scanner…** button.

   The Scanner screen appears.
6. Select the size of your document from the scan size setting pop-up menu.
7. Select the destination folder or destination application.
8. Click **Show Details** to change the scanning settings if needed.
9. Click **Scan**.

Related Information

- Using AirPrint Scanning

Configure Scan Settings Using Web Based Management

Related Models: ADS-1800W

- Set the Scan Job Email Report Using Web Based Management

Set the Scan Job Email Report Using Web Based Management

Related Models: ADS-1800W

When you scan a document, the machine will send a scan job email report automatically to the registered email address.

1. Start your web browser.
2. Type "https://machine's IP address" in your browser's address bar (where "machine's IP address" is the machine's IP address).

   For example:

   https://192.168.1.2
3. If required, type the password in the **Login** field, and then click **Login**.

   The default password to manage this machine's settings is located on the bottom of the machine and marked "**Pwd**". Change the default password by following the on-screen instructions when you first log in.
4. In the left navigation bar, click **Scan** > **Scan Job e-mail report**.

   If the left navigation bar is not visible, start navigating from ≡.
5. In the **Administrator Address** field, type the email address.
6. For the scan functions you want, select **Enabled** to send a scan job email report.
7. Click **Submit**.

Related Information

- Configure Scan Settings Using Web Based Management

Related Topics:

- Access Web Based Management

Network

Related Models: ADS-1350W/ADS-1800W

- Configure Network Settings
- Wireless Network Settings
- Network Features
- Brother Management Tools

Configure Network Settings

Related Models: ADS-1350W/ADS-1800W

- Configure Network Settings Using the Control Panel
- Change Machine Settings Using Web Based Management

Configure Network Settings Using the Control Panel

Related Models: ADS-1800W

To configure the machine for your network, use the control panel's [Network] menu selections.

You can also use management utilities, such as Web Based Management, to configure and change your Brother machine's network settings.

1. Press [Settings] > [Network].
2. Press ▲ or ▼ to display the network option, and then press it. Repeat this step until you access the menu you want to configure, and then follow the touchscreen LCD instructions.

Related Information

- Configure Network Settings

Wireless Network Settings

Related Models: ADS-1350W/ADS-1800W

- Use the Wireless Network
- Use Wi-Fi Direct®
- Use Wireless Direct
- Enable or Disable the Wireless LAN
- Wireless LAN Error Codes

Use the Wireless Network

Related Models: ADS-1350W/ADS-1800W

- Before Configuring Your Machine for a Wireless Network
- Configure Your Machine for a Wireless Network Using the Setup Wizard from Your Computer
- Configure Your Machine for a Wireless Network Using the Machine's Control Panel Setup Wizard
- Configure Your Machine for a Wireless Network Using the One-Push Method of Wi-Fi Protected Setup™ (WPS)
- Configure Your Machine for a Wireless Network Using the PIN Method of Wi-Fi Protected Setup™ (WPS)

Before Configuring Your Machine for a Wireless Network

Related Models: ADS-1350W/ADS-1800W

Before attempting to configure a wireless network, confirm the following:

- If you are using an enterprise wireless network, you must know the User ID and Password.
- To achieve optimum results with normal everyday document scanning, place your machine as close to the wireless LAN access point/router as possible with minimal obstructions. Large objects and walls between the two devices and interference from other electronic devices can affect the data transfer speed of your documents.

  Due to these factors, wireless may not be the best method of connection for all types of documents and applications. If you are scanning large files, such as multi-page documents with mixed text and large graphics, you may want to consider selecting USB for the fastest scan speed.
- If there is a signal in the vicinity, wireless LAN allows you to freely make a LAN connection. However, if security settings are not correctly configured, the signal may be intercepted by malicious third-parties, possibly resulting in:
  - Theft of personal or confidential information
  - Improper transmission of information to parties impersonating the specified individuals
  - Dissemination of transcribed communication contents that were intercepted

Make sure you know your wireless router/access point's Network Name (SSID) and Network Key (Password). If you cannot find this information, consult the manufacturer of your wireless router/access point, your system administrator, or Internet provider. Brother cannot provide this information.

Related Information

- Use the Wireless Network

Configure Your Machine for a Wireless Network Using the Setup Wizard from Your Computer

Related Models: ADS-1350W/ADS-1800W

>> Windows
>> Mac

Windows

1. Download the installer from your model's **Downloads** page at support.brother.com/downloads.
2. Follow the on-screen instructions.
3. Select **Wireless Network Connection (Wi-Fi)**, and then click **Next**.
4. Follow the on-screen instructions.

You have completed the wireless network setup.

Mac

1. Download the Wireless Device Setup Wizard installer from your model's **Downloads** page at support.brother.com/downloads.
2. Double-click the Wireless Device Setup Wizard icon.
3. Follow the on-screen instructions.

You have completed the wireless network setup.

Related Information

- Use the Wireless Network

Configure Your Machine for a Wireless Network Using the Machine's Control Panel Setup Wizard

Related Models: ADS-1800W

Before configuring your machine, we recommend writing down your wireless network settings. You will need this information before you continue with the configuration.

1. Check and write down the current wireless network settings.

Network Name (SSID)

Network Key (Password)

For example:

Network Name (SSID)
HELLO

Network Key (Password)
12345

If your router uses WEP encryption, enter the Network Key (Password) used as the first WEP key. Your Brother machine supports the use of the first WEP key only.

2. Press [Settings] > [Network] > [WLAN(Wi-Fi)] > [Find Wi-Fi Network].
3. When [Enable WLAN? Do you want to continue?] appears, press [Yes].

   The wireless setup wizard starts. To cancel, press [No].
4. The machine searches for your network and displays a list of available SSIDs. Press ▲ or ▼ to display the SSID you want to connect to, and then press it.
5. Press [OK].
6. Do one of the following:
   - If using an authentication and encryption method that requires a Network Key (Password), enter the Network Key (Password) you wrote down in the first step.

     When you have entered all the characters, press [OK].
   - If your authentication method is Open System and your encryption mode is None, go to the next step.
7. The machine attempts to connect to the wireless device you have selected.

If your wireless device is connected successfully, the LCD displays [Connected].

You have completed the wireless network setup. To install drivers and software necessary for operating your machine, go to your model's **Downloads** page at support.brother.com/downloads.

Related Information

- Use the Wireless Network

Configure Your Machine for a Wireless Network Using the One-Push Method of Wi-Fi Protected Setup™ (WPS)

Related Models: ADS-1350W/ADS-1800W

If your wireless access point/router supports Wi-Fi Protected Setup™ (WPS), you can use WPS from your machine's control panel to configure your wireless network settings.

>> ADS-1350W
>> ADS-1800W

ADS-1350W

1. Press and hold WPS for two seconds.
2. When the Wi-Fi LED starts flashing, press the WPS button on your wireless access point/router. Your machine automatically tries to connect to your wireless network.

If your wireless device is connected successfully, the Wi-Fi LED stops flashing and remains lit.

You have completed the wireless network setup. To install drivers and software necessary for operating your machine, go to your model's **Downloads** page at support.brother.com/downloads.

ADS-1800W

1. Press [Settings] > [Network] > [WLAN(Wi-Fi)] > [WPS/Push Button].
2. When [Enable WLAN? Do you want to continue?] appears, press [Yes].

   The wireless setup wizard starts. To cancel, press [No].
3. When the touchscreen instructs you to start WPS, press the WPS button on your wireless access point/router. Press [OK], and then your machine automatically tries to connect to your wireless network.

If your wireless device is connected successfully, the LCD displays [Connected].

You have completed the wireless network setup. To install drivers and software necessary for operating your machine, go to your model's **Downloads** page at support.brother.com/downloads.

Related Information

- Use the Wireless Network

Configure Your Machine for a Wireless Network Using the PIN Method of Wi-Fi Protected Setup™ (WPS)

Related Models: ADS-1350W/ADS-1800W

If your wireless access point/router supports WPS, you can use the Personal Identification Number (PIN) Method to configure your wireless network settings.

The PIN Method is one of the connection methods developed by the Wi-Fi Alliance®. By submitting a PIN created by an Enrollee (your machine) to the Registrar (a device that manages the wireless LAN), you can set up the wireless network and security settings. For more information on how to access WPS mode, see the instructions provided with your wireless access point/router.

Type A

Connection when the wireless access point/router (1) doubles as the Registrar.

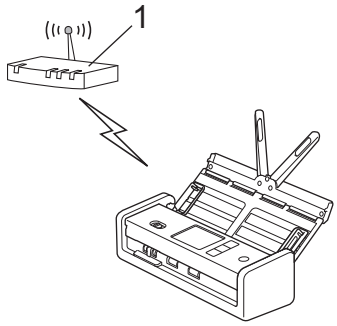

Type B

Connection when another device (2), such as a computer, is used as the Registrar.

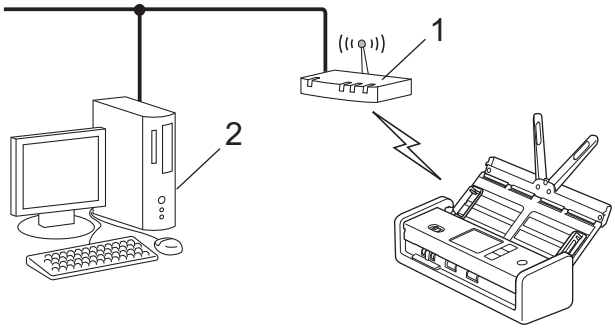

>> ADS-1350W
>> ADS-1800W

ADS-1350W

Before configuring your wireless network settings, write down the eight-digit PIN located on the bottom of the machine and marked **"PIN(WPS)"**.

1. Press and hold WPS for two seconds.
2. When the Wi-Fi LED starts flashing, press ⏻. Your machine starts searching for a wireless access point/router.
3. Using a computer connected to the network, in your browser's address bar, type the IP address of the device you are using as the Registrar. (For example: http://192.168.1.2)
4. Go to the WPS settings page and type the PIN, and then follow the on-screen instructions.

- The Registrar is usually the wireless access point/router.
- The settings page may differ depending on the brand of wireless access point/router. For more detailed information, see the instructions supplied with your wireless access point/router.

If using a Windows 10 or Windows 11 computer as a Registrar, complete the following steps:

5. Hold down the [⊞] key and press the [R] key on the computer's keyboard to launch **Run**.
6. Type **"control printers"** in the **Open:** field and click **OK**.

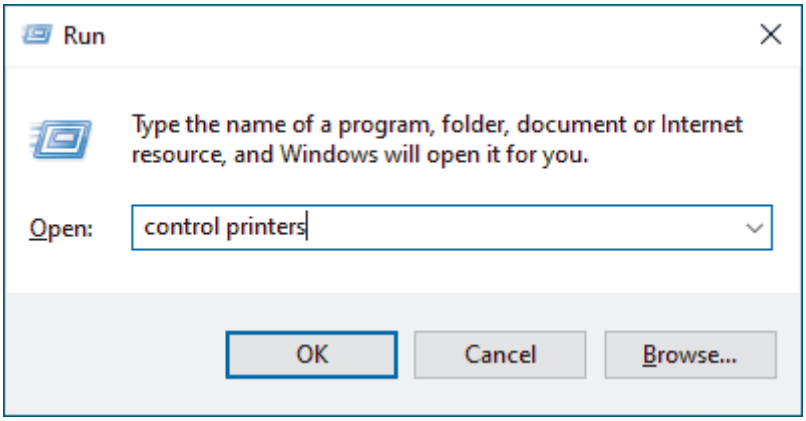

The **Devices and Printers** window appears.

If the **Devices and Printers** window does not appear, click **View more devices** > **More devices and printer settings**.

7. Click **Add a device**.

- To use a Windows 10 or Windows 11 computer as a Registrar, you must register it to your network in advance. For more information, see the instructions supplied with your wireless LAN access point/router.
- If using Windows 10 or Windows 11 as a Registrar, you can install the scanner driver after wireless configuration is finished by following the on-screen instructions. To install the driver and software necessary to use your machine, go to your model's **Downloads** page at support.brother.com/downloads.

8. Select your machine and click **Next**.
9. Type the PIN, and then click **Next**.
10. Click **Close**.

If your wireless device is connected successfully, the Wi-Fi LED stops flashing and remains lit.

You have completed the wireless network setup. To install drivers and software necessary for operating your machine, go to your model's **Downloads** page at support.brother.com/downloads.

ADS-1800W

1. Press [Settings] > [Network] > [WLAN(Wi-Fi)] > [WPS/PIN Code].
2. When [Enable WLAN? Do you want to continue?] appears, press [Yes].

   The wireless setup wizard starts. To cancel, press [No].
3. The LCD displays an eight-digit PIN and the machine starts searching for a wireless access point/router.
4. Using a computer connected to the network, in your browser's address bar, type the IP address of the device you are using as the Registrar. (For example: http://192.168.1.2)
5. Go to the WPS settings page and type the PIN, and then follow the on-screen instructions.

- The Registrar is usually the wireless access point/router.
- The settings page may differ depending on the brand of wireless access point/router. For more detailed information, see the instructions supplied with your wireless access point/router.

If using a Windows 10 or Windows 11 computer as a Registrar, complete the following steps:

6. Hold down the [⊞] key and press the [R] key on the computer's keyboard to launch **Run**.
7. Type **"control printers"** in the **Open:** field and click **OK**.

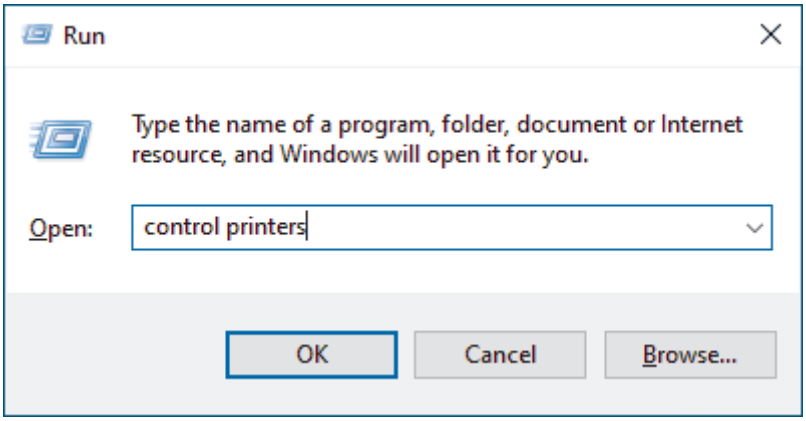

The **Devices and Printers** window appears.

If the **Devices and Printers** window does not appear, click **View more devices** > **More devices and printer settings**.

8. Click **Add a device**.

- To use a Windows 10 or Windows 11 computer as a Registrar, you must register it to your network in advance. For more information, see the instructions supplied with your wireless LAN access point/router.
- If using Windows 10 or Windows 11 as a Registrar, you can install the scanner driver after wireless configuration is finished by following the on-screen instructions. To install the driver and software necessary to use your machine, go to your model's **Downloads** page at support.brother.com/downloads.

9. Select your machine and click **Next**.
10. Type the PIN displayed on the machine's LCD, and then click **Next**.
11. Click **Close**.

If your wireless device is connected successfully, the LCD displays `[Connected]`.

You have completed the wireless network setup. To install drivers and software necessary for operating your machine, go to your model's **Downloads** page at support.brother.com/downloads.

Related Information

- Use the Wireless Network

Use Wi-Fi Direct®

Related Models: ADS-1800W

- Wi-Fi Direct Overview
- Configure Your Wi-Fi Direct Network Using the Push Button Method
- Configure Your Wi-Fi Direct Network Manually
- Network Problems

Wi-Fi Direct Overview

Related Models: ADS-1800W

Wi-Fi Direct is one of the wireless configuration methods developed by the Wi-Fi Alliance®. It allows you to securely connect your mobile device to your Brother machine without using a wireless router/access point.

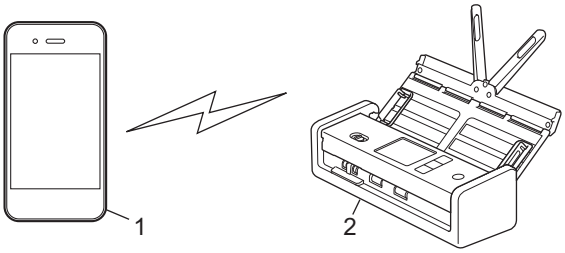

1. Mobile device
2. Your Brother machine

Related Information

- Use Wi-Fi Direct®

Related Topics:

- Configure Your Wi-Fi Direct Network Using the Push Button Method
- Configure Your Wi-Fi Direct Network Manually

Configure Your Wi-Fi Direct Network Using the Push Button Method

Related Models: ADS-1800W

When the machine receives the Wi-Fi Direct request from your mobile device, the message `[Wi-Fi Direct Connection request received. Press [OK] to connect. Device Name:]` will appear on the LCD. Press `[OK]` to connect.

1. Press (Wi-Fi Direct status).
2. Press `[Push Button]`.
3. When the `[Activate Wi-Fi Direct on other device. Then Press [OK].]` message appears, turn your mobile device's Wi-Fi Direct function on (for more information, see your mobile device's user's guide). Press `[OK]` on your Brother machine.
4. When your mobile device displays a list of machines with Wi-Fi Direct enabled, select your Brother machine.

When your mobile device connects successfully, the machine displays `[Connected]`.

Related Information

- Use Wi-Fi Direct®

Related Topics:

- Wi-Fi Direct Overview
- Configure Your Wi-Fi Direct Network Manually

Configure Your Wi-Fi Direct Network Manually

Related Models: ADS-1800W

If your mobile device does not support Wi-Fi Direct or WPS, you must configure a Wi-Fi Direct network manually.

1. Press [Settings] > [Network] > [Wi-Fi Direct] > [Manual].
2. The machine will display the SSID (Network Name) and Password (Network Key). Go to your mobile device's wireless network settings screen, select the SSID, and then enter the password.

If your mobile device connects successfully, the machine displays [Connected]. You have completed the Wi-Fi Direct network setup.

Related Information

- Use Wi-Fi Direct®

Related Topics:

- Wi-Fi Direct Overview
- Configure Your Wi-Fi Direct Network Using the Push Button Method

Use Wireless Direct

Related Models: ADS-1350W

- Scan from Your Mobile Device Using Wireless Direct
- Configure Your Wireless Direct Network Manually

Scan from Your Mobile Device Using Wireless Direct

Related Models: ADS-1350W

Wireless Direct is one of the wireless configuration methods developed by the Wi-Fi Alliance®. It allows you to configure a secured wireless network between your Brother machine and a mobile device, such as an Android™ device, Windows device, iPhone, iPod touch, or iPad, without using an access point. You can configure a wireless network by manually setting a SSID and password.

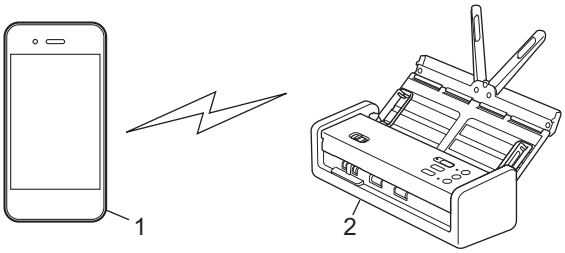

1. Mobile device
2. Your Brother machine

Related Information

- Use Wireless Direct

Configure Your Wireless Direct Network Manually

Related Models: ADS-1350W

Before configuring your wireless network settings, write down the machine's Network Name (SSID) and Network Key (Password) located on the bottom of the machine and marked **"SSID"** and **"PASS"**.

1. Open the Front Cover.
2. Press and hold ② and WPS simultaneously for five seconds.

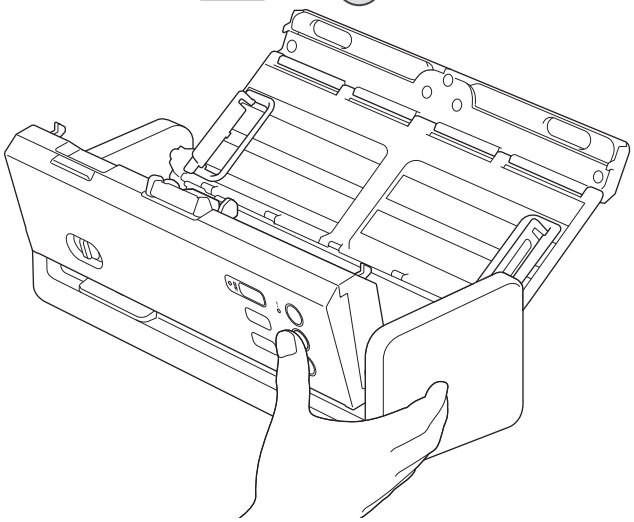

   All LEDs flash for three seconds.
3. Close the Front Cover.
4. Turn on the Wi-Fi function on your mobile device, and then search for the machine.
5. On your mobile device, tap the machine's Network Name (SSID).
6. Enter the Network Key (Password) when prompted.

- To connect your machine (used as a standalone device) to a wireless access point/router, a computer connection is required. Download the driver and software necessary to use your machine, go to your model's **Downloads** page at support.brother.com/downloads.
- To disable Wireless Direct:
  a. Open the Front Cover.
  b. Press and hold ② and WPS simultaneously for five seconds.

     All LEDs flash for three seconds.
  c. Close the Front Cover.

Related Information

- Use Wireless Direct

Enable or Disable the Wireless LAN

Related Models: ADS-1350W/ADS-1800W

>> ADS-1350W
>> ADS-1800W

ADS-1350W

1. Open the Front Cover.
2. Press and hold ① and WPS simultaneously for five seconds.

   All LEDs flash for three seconds. The Wi-Fi LED turns on if the Wireless LAN is enabled or remains off if the Wireless LAN is disabled.
3. Close the Front Cover.

ADS-1800W

1. Press [Settings] > [Network] > [WLAN(Wi-Fi)] > [WLAN(Wi-Fi) Enable].
2. Do one of the following:
   - To enable Wi-Fi, select [On].
   - To disable Wi-Fi, select [Off].
3. Press .

Related Information

- Wireless Network Settings

Wireless LAN Error Codes

Related Models: ADS-1800W

If the LCD displays an error message, locate the message in the table and use the recommended solution to correct the error.

Error Code	Problem and Recommended Solutions
TS-01	The WLAN (Wi-Fi) is not enabled. Enable the WLAN setting on your machine.
TS-02	The wireless router/access point cannot be detected. Check the following points and try to set up your wireless connection again: • Make sure the wireless router/access point is on. • Temporarily place your machine closer to the wireless router/access point when you are configuring the wireless settings. • If your wireless router/access point is using MAC address filtering, confirm that the MAC address of the machine is allowed in the filter. • If you manually entered the Network Name (SSID) and security information (authentication method/encryption method), the information may be incorrect. Check the Network Name and security information again and re-enter the correct information. • Restart your wireless router/access point. If you cannot find the Network Name (SSID) and security information, see the documentation provided with your wireless router/access point, or contact the router manufacturer, your system administrator, or Internet service provider.
TS-03	The wireless enterprise network and security settings you entered may be incorrect. Check the following points and try to set up your wireless connection again: Verify the following information: - Network Name (SSID) you selected to configure your machine. - Security information you selected to configure your machine (such as the authentication method, encryption method, or User ID). If you still cannot find the Network Name (SSID) and security information, see the documentation provided with your wireless router/access point, or contact the router manufacturer, your system administrator, or Internet service provider.
TS-04	Your machine does not support the authentication and encryption methods used by the selected wireless router/access point. For infrastructure mode (Most common) Change the authentication and encryption methods of the wireless router/access point. Your machine supports the following authentication and encryption methods: • WPA-Personal: TKIP / AES • WPA2-Personal: TKIP / AES • WPA3-Personal: AES • Open: WEP / NONE (without encryption) • Shared key: WEP If your issue is not solved, the Network Name (SSID) or security settings you entered may be incorrect. Check that all wireless network settings are correct for your network.

Error Code	Problem and Recommended Solutions
TS-05	The Network Name (SSID) and Network Key (Password) are incorrect. Check the following points and try to set up your wireless connection again: • Confirm the Network Name (SSID) and Network Key (Password). • If your Network Key contains upper-case and lower-case letters, make sure you type them correctly. • If you cannot find the Network Name (SSID) and security information, see the documentation provided with your wireless router/access point, or contact the router manufacturer, your system administrator, or Internet service provider. • If your wireless router/access point uses WEP encryption with multiple WEP keys, write down and use only the first WEP key.
TS-06	The wireless security information (authentication method/encryption method/Network Key (Password)) is incorrect. Check the following points and try to set up your wireless connection again: • Confirm the Network Key. If your Network Key contains upper-case and lower-case letters, make sure you type them correctly. • Confirm whether the authentication method entered and the authentication method or encryption method supported by the wireless router/access point are the same. • If the network key, authentication method, and encryption method have been confirmed, restart your wireless router/access point and the machine. • If your wireless router/access point's Stealth Mode is on, you may need to disable it to connect to the wireless network. If you cannot find the Network Name (SSID) and security information, see the documentation provided with your wireless router/access point, or contact the router manufacturer, your system administrator, or Internet service provider.
TS-07	The machine cannot detect a wireless router/access point that has WPS (Wi-Fi Protected Setup) enabled. Check the following points and try again: • To check if your wireless router/access point supports WPS, look for the WPS symbol displayed on the router/access point. For more information, see the documentation provided with your wireless router/access point. • To set up your wireless connection using WPS, you must configure both your machine and the wireless router/access point. For more information, see the user's guide. • If you do not know how to set up your wireless router/access point using WPS, see the documentation provided with your wireless router/access point, or contact the router manufacturer, your system administrator, or Internet service provider.
TS-08	Two or more wireless routers or access points that have WPS enabled are detected. Check the following points and try again: • Make sure that only one wireless router/access point within range has WPS enabled, and then try to connect again. • Try to connect again after a few minutes to avoid interference from other access points/ routers.

How to confirm wireless security information (SSID/authentication method/encryption method/Network Key) of your WLAN access point/router:

1. The default security settings may be provided on a label attached to the WLAN access point/router. Or the manufacturer's name or model number of the WLAN access point/router may be used as the default security settings.
2. See the documentation provided with your WLAN access point/router for information on how to find the security settings.

- If the WLAN access point/router is set to not broadcast the SSID, the SSID will not automatically be detected. You will have to manually enter the SSID name.
- The Network key may also be described as the Password, Security Key, or Encryption Key.

If you do not know the SSID and wireless security settings of your WLAN access point/router or how to change the configuration, see the documentation provided with your WLAN access point/router, ask the manufacturer of your access point/router or ask your Internet provider or network administrator.

Related Information

- Wireless Network Settings

Network Features

Related Models: ADS-1350W/ADS-1800W

- Configure and Operate LDAP Search
- Synchronise Time with the SNTP Server Using Web Based Management
- Reset the Network Settings to Factory Default

Configure and Operate LDAP Search

Related Models: ADS-1800W

The LDAP feature allows you to search for information, such as email addresses on your server. When you use the Scan to Email server feature, you can use the LDAP search to find email addresses.

- The LDAP feature does not support simplified Chinese, traditional Chinese, or Korean.
- The LDAP feature supports LDAPv3.

Related Information

- Network Features
  - Change LDAP Configuration Using Web Based Management
  - Perform an LDAP Search Using Your Machine's Control Panel

Change LDAP Configuration Using Web Based Management

Related Models: ADS-1800W

Use Web Based Management to configure your LDAP settings in a web browser.

1. Start your web browser.
2. Type "https://machine's IP address" in your browser's address bar (where "machine's IP address" is the machine's IP address).

   For example:

   https://192.168.1.2
3. If required, type the password in the **Login** field, and then click **Login**.

The default password to manage this machine's settings is located on the bottom of the machine and marked "**Pwd**". Change the default password by following the on-screen instructions when you first log in.

4. In the left navigation bar, click **Address Book** > **LDAP**.

If the left navigation bar is not visible, start navigating from ≡.

- **LDAP Search**
- **LDAP Server Address**
- **SSL/TLS**
- **Port** (The default port number is 389.)
- **Search Root**
- **Authentication**
- **Username**

  This selection will be available depending on the authentication method used.
- **Password**

  This selection will be available depending on the authentication method used.

- If the LDAP server supports Kerberos authentication, we recommend selecting Kerberos for the Authentication settings. It provides strong authentication between the LDAP server and your machine.
- You must configure the SNTP protocol (network time server), or you must set the date, time and time zone correctly on the control panel for Kerberos authentication.

- **Kerberos Server Address**

  This selection will be available depending on the authentication method used.
- **Timeout for LDAP**
- **Attribute of Name (Search Key)**
- **Attribute of E-mail**
- **Optional Attribute**

5. When finished, click **Submit**. Make sure the **Status** field reads **On**.

Related Information

- Configure and Operate LDAP Search

Related Topics:

- Access Web Based Management
- Install the Self-signed Certificate for Windows Users as Administrator

- Synchronise Time with the SNTP Server Using Web Based Management

Perform an LDAP Search Using Your Machine's Control Panel

Related Models: ADS-1800W

After you configure LDAP settings, you can use the LDAP search feature to find email addresses to use for scanning to Email Server.

- The LDAP feature supports LDAPv3.
- You may need to use Kerberos Authentication or Simple Authentication to connect to your LDAP server, depending on the security policy set by your network administrator.
- You must configure the SNTP protocol (network time server), or you must set the date, time and time zone correctly on the control panel for Kerberos authentication.

1. Press to search.
2. Enter the initial characters for your search using the LCD.
3. Press [OK].

   The LDAP search result will be shown on the LCD; the icon appears before the email (local) address book search results.

   If there is no match on the server or the email (local) address book, the LCD displays [Results cannot be found.] for about 60 seconds.
4. Press ▲ or ▼ to display the name you want.
5. Press the name and check the contact information is correct.
6. Press [Apply].
7. Load your document, press [OK], and then press [Start].

Related Information

- Configure and Operate LDAP Search

Related Topics:

- Synchronise Time with the SNTP Server Using Web Based Management

Synchronise Time with the SNTP Server Using Web Based Management

Related Models: ADS-1350W/ADS-1800W

The Simple Network Time Protocol (SNTP) is used to synchronise the time used by the machine for authentication with the SNTP time server. (This is not the time displayed on the machine's LCD.) You can automatically or manually synchronise the machine's time with the Coordinated Universal Time (UTC) provided by the SNTP time server.

- Configure Date and Time Using Web Based Management
- Configure the SNTP Protocol Using Web Based Management
- Change LDAP Configuration Using Web Based Management
- Perform an LDAP Search Using Your Machine's Control Panel

Configure Date and Time Using Web Based Management

Related Models: ADS-1350W/ADS-1800W

Configure the date and time to synchronise the time used by the machine with the SNTP time server.

This feature is not available in some countries.

1. Start your web browser.
2. Type "https://machine's IP address" in your browser's address bar (where "machine's IP address" is your machine's IP address).

   For example:

   https://192.168.1.2
3. If required, type the password in the **Login** field, and then click **Login**.

   The default password to manage this machine's settings is located on the bottom of the machine and marked "**Pwd**". Change the default password by following the on-screen instructions when you first log in.
4. In the left navigation bar, click **Administrator** > **Date&Time**.

   If the left navigation bar is not visible, start navigating from ≡.
5. Verify the **Time Zone** settings.

   Select the time difference between your location and UTC from the **Time Zone** drop-down list. For example, the time zone for Eastern Time in the USA and Canada is UTC-05:00.
6. Select the **Synchronize with SNTP server** checkbox.
7. Click **Submit**.

   You can also configure date and time manually.

Related Information

- Synchronise Time with the SNTP Server Using Web Based Management

Related Topics:

- Access Web Based Management

Configure the SNTP Protocol Using Web Based Management

Related Models: ADS-1350W/ADS-1800W

Configure the SNTP protocol to synchronise the time the machine uses for authentication with the time kept by the SNTP time server.

This feature is not available in some countries.

1. Start your web browser.
2. Type "https://machine's IP address" in your browser's address bar (where "machine's IP address" is the machine's IP address).

   For example:

   https://192.168.1.2
3. If required, type the password in the **Login** field, and then click **Login**.

   The default password to manage this machine's settings is located on the bottom of the machine and marked "**Pwd**". Change the default password by following the on-screen instructions when you first log in.
4. In the left navigation bar, click **Network** > **Network** > **Protocol**.

   If the left navigation bar is not visible, start navigating from ≡.
5. Select the **SNTP** checkbox to activate the settings.
6. Click **Submit**.
7. Restart your Brother machine to activate the configuration.
8. Next to the SNTP checkbox, click **Advanced Settings** and configure your settings as needed.

Option	Description
Status	Displays whether the SNTP protocol is enabled or disabled.
Synchronization Status	Confirm the latest synchronisation status.
SNTP Server Method	Select **AUTO** or **STATIC**. • **AUTO** If you have a DHCP server in your network, the SNTP server will obtain the address from that server automatically. • **STATIC** Type the address you want to use.
Primary SNTP Server Address **Secondary SNTP Server Address**	Type the server address (up to 64 characters). The secondary SNTP server address is used as a backup to the primary SNTP server address. If the primary server is unavailable, the machine will contact the secondary SNTP server.
Primary SNTP Server Port **Secondary SNTP Server Port**	Type the port number (1-65535). The secondary SNTP server port is used as a backup to the primary SNTP server port. If the primary port is unavailable, the machine will contact the secondary SNTP port.
Synchronization Interval	Type the number of hours between server synchronisation attempts (1-168 hours).

9. Click **Submit**.

Related Information

- Synchronise Time with the SNTP Server Using Web Based Management

Related Topics:

- Access Web Based Management

Reset the Network Settings to Factory Default

Related Models: ADS-1350W/ADS-1800W

You can use your machine's control panel or Web Based Management to reset the machine's network settings to its default factory settings. This resets all information, such as the password and IP address.

>> ADS-1350W
>> ADS-1800W

ADS-1350W

1. Start your web browser.
2. Type "https://machine's IP address" in your browser's address bar (where "machine's IP address" is the machine's IP address).

   For example:

   https://192.168.1.2
3. If required, type the password in the **Login** field, and then click **Login**.

The default password to manage this machine's settings is located on the bottom of the machine and marked "**Pwd**". Change the default password by following the on-screen instructions when you first log in.

4. In the left navigation bar, click **Administrator** > **Reset Menu**.

If the left navigation bar is not visible, start navigating from ≡.

5. In the **Network** section, click **Reset**.

   The reset confirmation message appears.
6. Click **Yes** to restart your machine.

To reset the network settings to factory default using machine's control panel, open the Front Cover, and then press and hold ⊗ and WPS simultaneously for five seconds.

ADS-1800W

1. Press [Settings] > [Network] > [Network Reset].

   The reset confirmation message appears.
2. Press [OK] for two seconds.

   The machine will restart.

Related Information

- Network Features

Brother Management Tools

Related Models: ADS-1350W/ADS-1800W

Use one of Brother's management tools to configure your Brother machine's network settings.

Go to your model's **Downloads** page at support.brother.com/downloads to download the tools.

Related Information

- Network

Security

Related Models: ADS-1350W/ADS-1800W

- Before Using Network Security Features
- Configure Certificates for Device Security
- Use SSL/TLS
- Use SNMPv3
- Use IEEE 802.1x Authentication
- Use Active Directory Authentication
- Use LDAP Authentication
- Use Secure Function Lock 3.0
- Send an Email Securely
- Lock the Machine Settings from the Control Panel

Before Using Network Security Features

Related Models: ADS-1350W/ADS-1800W

Your machine employs some of the latest network security and encryption protocols available today. These network features can be integrated into your overall network security plan to help protect your data and prevent unauthorised access to the machine.

We recommend disabling the FTP protocol. Accessing the machine using this protocol is not secure. However, note that if you disable FTP, the Scan to FTP feature will be disabled.

Related Information

- Security

Configure Certificates for Device Security

Related Models: ADS-1350W/ADS-1800W

You must configure a certificate to manage your networked machine securely using SSL/TLS. You must use Web Based Management to configure a certificate.

- Supported Security Certificate Features
- How to Create and Install a Certificate
- Create a Self-signed Certificate
- Create a Certificate Signing Request (CSR) and Install a Certificate from a Certificate Authority (CA)
- Import and Export the Certificate and Private Key
- Import and Export a CA Certificate
- Manage Multiple Certificates

Supported Security Certificate Features

Related Models: ADS-1350W/ADS-1800W

Your machine supports the use of multiple security certificates, which allows secure authentication and communication with the machine. The following security certificate features can be used with the machine:

- SSL/TLS communication
- IEEE 802.1x authentication

The Brother machine supports the following:

- Pre-installed certificate

  Your machine has a pre-installed self-signed certificate. This certificate enables you to use SSL/TLS communication without creating or installing a different certificate.

  The pre-installed self-signed certificate protects your communication up to a certain level. We recommend using a certificate that is issued by a trusted organisation for better security.

- Self-signed certificate

  This scan server issues its own certificate. Using this certificate, you can easily use the SSL/TLS communication without creating or installing a different certificate from a CA.

- Certificate from a Certificate Authority (CA)

  There are two methods for installing a certificate from a CA. If you already have a certificate from a CA or if you want to use a certificate from an external trusted CA:

  - When using a Certificate Signing Request (CSR) from this scan server.
  - When importing a certificate and a private key.

- Certificate Authority (CA) Certificate

  To use a CA certificate that identifies the CA and owns its private key, you must import that CA certificate from the CA before configuring the security features of the Network.

  - If you are going to use SSL/TLS communication, we recommend contacting your system administrator first.
  - When you reset the scan server back to its default factory settings, the certificate and the private key that are installed will be deleted. If you want to keep the same certificate and the private key after resetting the scan server, export them before resetting, and then reinstall them.

Related Information

- Configure Certificates for Device Security

Related Topics:

- Configure IEEE 802.1x Authentication for Your Network Using Web Based Management (Web Browser)

How to Create and Install a Certificate

Related Models: ADS-1350W/ADS-1800W

There are two options when choosing a security certificate: use a self-signed certificate or use a certificate from a Certificate Authority (CA).

Option 1

Self-Signed Certificate

1. Create a self-signed certificate using Web Based Management.
2. Install the self-signed certificate on your computer.

Option 2

Certificate from a CA

1. Create a Certificate Signing Request (CSR) using Web Based Management.
2. Install the certificate issued by the CA on your Brother machine using Web Based Management.
3. Install the certificate on your computer.

Related Information

- Configure Certificates for Device Security

Create a Self-signed Certificate

Related Models: ADS-1350W/ADS-1800W

1. Start your web browser.
2. Type "https://machine's IP address" in your browser's address bar (where "machine's IP address" is your machine's IP address).

   For example:

   https://192.168.1.2
3. If required, type the password in the **Login** field, and then click **Login**.

   The default password to manage this machine's settings is located on the bottom of the machine and marked "**Pwd**". Change the default password by following the on-screen instructions when you first log in.
4. In the left navigation bar, click **Network** > **Security** > **Certificate**.

   If the left navigation bar is not visible, start navigating from ≡.
5. Click **Create Self-Signed Certificate**.
6. Enter a **Common Name** and a **Valid Date**.
   - The length of the **Common Name** is less than 64 bytes. Enter an identifier, such as an IP address, node name, or domain name to use when accessing this machine through SSL/TLS communication. The node name is displayed by default.
   - A warning will appear if you use the IPPS or HTTPS protocol and enter a different name in the URL than the **Common Name** that was used for the self-signed certificate.
7. Select your setting from the **Public Key Algorithm** drop-down list. The default setting is **RSA(2048bit)**.
8. Select your setting from the **Digest Algorithm** drop-down list. The default setting is **SHA256**.
9. Click **Submit**.

Related Information

- Configure Certificates for Device Security

Related Topics:

- Access Web Based Management

Create a Certificate Signing Request (CSR) and Install a Certificate from a Certificate Authority (CA)

Related Models: ADS-1350W/ADS-1800W

If you already have a certificate from an external trusted Certificate Authority (CA) , you can store the certificate and private key on the machine and manage them by importing and exporting. If you do not have a certificate from an external trusted CA, create a Certificate Signing Request (CSR), send it to a CA for authentication, and install the returned certificate on your machine.

- Create a Certificate Signing Request (CSR)
- Install a Certificate on Your Machine

Create a Certificate Signing Request (CSR)

Related Models: ADS-1350W/ADS-1800W

A Certificate Signing Request (CSR) is a request sent to a Certificate Authority (CA) to authenticate the credentials contained within the certificate.

We recommend installing a Root Certificate from the CA on your computer before creating the CSR.

1. Start your web browser.
2. Type "https://machine's IP address" in your browser's address bar (where "machine's IP address" is your machine's IP address).

   For example:

   https://192.168.1.2
3. If required, type the password in the **Login** field, and then click **Login**.

   The default password to manage this machine's settings is located on the bottom of the machine and marked "**Pwd**". Change the default password by following the on-screen instructions when you first log in.
4. In the left navigation bar, click **Network** > **Security** > **Certificate**.

   If the left navigation bar is not visible, start navigating from ≡.
5. Click **Create CSR**.
6. Type a **Common Name** (required) and add other information about your **Organization** (optional).

   - Your company details are required so that a CA can confirm your identity and verify it to the outside world.
   - The length of the **Common Name** must be less than 64 bytes. Enter an identifier, such as an IP address, node name, or domain name to use when accessing this machine through SSL/TLS communication. The node name is displayed by default. The **Common Name** is required.
   - A warning will appear if you type a different name in the URL than the Common Name that was used for the certificate.
   - The length of the **Organization**, the **Organization Unit**, the **City/Locality**, and the **State/Province** must be less than 64 bytes.
   - The **Country/Region** should be a two-character ISO 3166 country code.
   - If you are configuring an X.509v3 certificate extension, select the **Configure extended partition** checkbox, and then select **Auto (Register IPv4)** or **Manual**.
7. Select your setting from the **Public Key Algorithm** drop-down list. The default setting is **RSA(2048bit)**.
8. Select your setting from the **Digest Algorithm** drop-down list. The default setting is **SHA256**.
9. Click **Submit**.

   The CSR appears on your screen. Save the CSR as a file or copy and paste it into an online CSR form offered by a Certificate Authority.
10. Click **Save**.

    Follow your CA's policy regarding the method to send a CSR to your CA.

Related Information

- Create a Certificate Signing Request (CSR) and Install a Certificate from a Certificate Authority (CA)

Related Topics:

- Access Web Based Management

Install a Certificate on Your Machine

Related Models: ADS-1350W/ADS-1800W

When you receive a certificate from a Certificate Authority (CA), follow the steps below to install it on the scan server:

> Only a certificate issued with your machine's Certificate Signing Request (CSR) can be installed on your machine. When you want to create another CSR, make sure that the certificate is installed before creating the new CSR. Create another CSR only after installing the certificate on the machine, otherwise the CSR created before installing the new CSR will be invalid.

1. Start your web browser.
2. Type "https://machine's IP address" in your browser's address bar (where "machine's IP address" is your machine's IP address).

   For example:

   https://192.168.1.2
3. If required, type the password in the **Login** field, and then click **Login**.

   The default password to manage this machine's settings is located on the bottom of the machine and marked "**Pwd**". Change the default password by following the on-screen instructions when you first log in.
4. In the left navigation bar, click **Network** > **Security** > **Certificate**.

   If the left navigation bar is not visible, start navigating from ≡.
5. Click **Install Certificate**.
6. Browse to the file that contains the certificate issued by the CA, and then click **Submit**.

   The certificate has been created and saved in your machine's memory successfully.

To use SSL/TLS communication, the Root Certificate from the CA must be installed on your computer. Contact your network administrator.

Related Information

- Create a Certificate Signing Request (CSR) and Install a Certificate from a Certificate Authority (CA)

Related Topics:

- Access Web Based Management

Import and Export the Certificate and Private Key

Related Models: ADS-1350W/ADS-1800W

Store the certificate and private key on your machine and manage them by importing and exporting them.

- Import a Certificate and Private Key
- Export the Certificate and Private Key

Import a Certificate and Private Key

Related Models: ADS-1350W/ADS-1800W

1. Start your web browser.
2. Type "https://machine's IP address" in your browser's address bar (where "machine's IP address" is your machine's IP address).

   For example:

   https://192.168.1.2
3. If required, type the password in the **Login** field, and then click **Login**.

   The default password to manage this machine's settings is located on the bottom of the machine and marked "**Pwd**". Change the default password by following the on-screen instructions when you first log in.
4. In the left navigation bar, click **Network** > **Security** > **Certificate**.

   If the left navigation bar is not visible, start navigating from ≡.
5. Click **Import Certificate and Private Key**.
6. Browse to the file you want to import.
7. Type the password if the file is encrypted, and then click **Submit**.

The certificate and private key are imported to your machine.

Related Information

- Import and Export the Certificate and Private Key

Related Topics:

- Access Web Based Management

Export the Certificate and Private Key

Related Models: ADS-1350W/ADS-1800W

1. Start your web browser.
2. Type "https://machine's IP address" in your browser's address bar (where "machine's IP address" is your machine's IP address).

   For example:

   https://192.168.1.2
3. If required, type the password in the **Login** field, and then click **Login**.

   The default password to manage this machine's settings is located on the bottom of the machine and marked "**Pwd**". Change the default password by following the on-screen instructions when you first log in.
4. In the left navigation bar, click **Network** > **Security** > **Certificate**.

   If the left navigation bar is not visible, start navigating from ≡.
5. Click **Export** shown with **Certificate List**.
6. Enter the password if you want to encrypt the file.

   If a blank password is used, the output is not encrypted.
7. Enter the password again for confirmation, and then click **Submit**.
8. Click **Save**.

The certificate and private key are exported to your computer.

You can also import the certificate to your computer.

Related Information

- Import and Export the Certificate and Private Key

Related Topics:

- Access Web Based Management

Import and Export a CA Certificate

Related Models: ADS-1350W/ADS-1800W

You can import, export, and store CA certificates on your Brother machine.

- Import a CA Certificate
- Export a CA Certificate

Import a CA Certificate

Related Models: ADS-1350W/ADS-1800W

1. Start your web browser.
2. Type "https://machine's IP address" in your browser's address bar (where "machine's IP address" is your machine's IP address).

   For example:

   https://192.168.1.2
3. If required, type the password in the **Login** field, and then click **Login**.

   The default password to manage this machine's settings is located on the bottom of the machine and marked "**Pwd**". Change the default password by following the on-screen instructions when you first log in.
4. In the left navigation bar, click **Network** > **Security** > **CA Certificate**.

   If the left navigation bar is not visible, start navigating from ≡.
5. Click **Import CA Certificate**.
6. Browse to the file you want to import.
7. Click **Submit**.

Related Information

- Import and Export a CA Certificate

Related Topics:

- Access Web Based Management

Export a CA Certificate

Related Models: ADS-1350W/ADS-1800W

1. Start your web browser.
2. Type "https://machine's IP address" in your browser's address bar (where "machine's IP address" is your machine's IP address).

   For example:

   https://192.168.1.2
3. If required, type the password in the **Login** field, and then click **Login**.

   The default password to manage this machine's settings is located on the bottom of the machine and marked "**Pwd**". Change the default password by following the on-screen instructions when you first log in.
4. In the left navigation bar, click **Network** > **Security** > **CA Certificate**.

   If the left navigation bar is not visible, start navigating from ≡.
5. Select the certificate you want to export and click **Export**.
6. Click **Submit**.

Related Information

- Import and Export a CA Certificate

Related Topics:

- Access Web Based Management

Manage Multiple Certificates

Related Models: ADS-1350W/ADS-1800W

The multiple certificate feature allows you to use Web Based Management to manage each certificate installed on your machine. In Web Based Management, navigate to the **Certificate** or **CA Certificate** screen to view certificate content, delete, or export your certificates.

	Maximum Number of Certificates Stored on Brother Machine
Self-signed Certificate or Certificate Issued by a CA	5
CA Certificate	7

We recommend storing fewer certificates than allowed, reserving an empty spot in case of certificate expiration. When a certificate expires, import a new certificate into the reserved spot, and then delete the expired certificate. This ensures that you avoid configuration failure.

- When you use HTTPS/IPPS or IEEE 802.1x, you must select which certificate you are using.
- (ADS-1800W) When you use SSL for SMTP communications, you do not have to choose the certificate. The necessary certificate will be chosen automatically.

Related Information

- Configure Certificates for Device Security

Use SSL/TLS

Related Models: ADS-1350W/ADS-1800W

- Introduction to SSL/TLS
- Manage Your Network Machine Securely Using SSL/TLS
- Send an Email Securely Using SSL/TLS

Introduction to SSL/TLS

Related Models: ADS-1350W/ADS-1800W

Secure Socket Layer (SSL) or Transport Layer Security (TLS) is an effective method of protecting data sent over a local or wide area network (LAN or WAN). It works by encrypting data, such as a scan job, sent over a network, so anyone trying to capture it will not be able to read it.

SSL/TLS will work with other forms of security such as WPA keys and firewalls.

Related Information

- Use SSL/TLS
  - Brief History of SSL/TLS
  - Benefits of Using SSL/TLS

Brief History of SSL/TLS

Related Models: ADS-1350W/ADS-1800W

SSL/TLS was originally created to secure web traffic information, particularly data sent between web browsers and servers. SSL is now used with additional applications, such as Telnet, printer, and FTP software, in order to become a universal solution for online security. Its original design intentions are still being used today by many online retailers and banks to secure sensitive data, such as credit card numbers, customer records, etc.

SSL/TLS uses extremely high levels of encryption and is trusted by banks all over the world.

Related Information

- Introduction to SSL/TLS

Benefits of Using SSL/TLS

Related Models: ADS-1350W/ADS-1800W

The primary benefit of using SSL/TLS is to guarantee secure scanning over an IP network by restricting unauthorised users from reading data sent to the machine. SSL's most important benefit is that it can be used to scan confidential data securely. For example, a Human Resource (HR) Department in a large company may be scanning wage slips on a regular basis. Without encryption, the data contained on these wage slips can be read by other network users. However, with SSL/TLS, anyone trying to capture the data will see a page of code and not the actual wage slip.

Related Information

- Introduction to SSL/TLS

Manage Your Network Machine Securely Using SSL/TLS

Related Models: ADS-1350W/ADS-1800W

- Configure a Certificate for SSL/TLS and Available Protocols
- Access Web Based Management Using SSL/TLS
- Install the Self-signed Certificate for Windows Users as Administrator
- Configure Certificates for Device Security

Configure a Certificate for SSL/TLS and Available Protocols

Related Models: ADS-1350W/ADS-1800W

Configure a certificate on your machine using Web Based Management before you use SSL/TLS communication.

1. Start your web browser.
2. Type "https://machine's IP address" in your browser's address bar (where "machine's IP address" is your machine's IP address).

   For example:

   https://192.168.1.2
3. If required, type the password in the **Login** field, and then click **Login**.

   The default password to manage this machine's settings is located on the bottom of the machine and marked "**Pwd**". Change the default password by following the on-screen instructions when you first log in.
4. In the left navigation bar, click **Network** > **Network** > **Protocol**.

   If the left navigation bar is not visible, start navigating from ≡.
5. Click **HTTP Server Settings**.
6. Select the certificate you want to configure from the **Select the Certificate** drop-down list.
7. Click **Submit**.
8. Click **Yes** to restart your scan server.

Related Information

- Manage Your Network Machine Securely Using SSL/TLS

Related Topics:

- Access Web Based Management

Access Web Based Management Using SSL/TLS

Related Models: ADS-1350W/ADS-1800W

To manage your network machine securely, you must use management utilities with security protocols.

- To use HTTPS protocol, HTTPS must be enabled on your machine. The HTTPS protocol is enabled by default.
- You can change the HTTPS protocol settings using the Web Based Management screen.

1. Start your web browser.
2. Type "https://machine's IP address" in your browser's address bar (where "machine's IP address" is the machine's IP address).

   For example:

   https://192.168.1.2
3. If required, type the password in the **Login** field, and then click **Login**.

   The default password to manage this machine's settings is located on the bottom of the machine and marked "**Pwd**". Change the default password by following the on-screen instructions when you first log in.
4. You can now access the machine using HTTPS.

Related Information

- Manage Your Network Machine Securely Using SSL/TLS

Related Topics:

- Access Web Based Management

Install the Self-signed Certificate for Windows Users as Administrator

Related Models: ADS-1350W/ADS-1800W

- The following steps are for Microsoft Edge. If you use another web browser, refer to your web browser's documentation or online help for instructions on how to install certificates.
- Make sure you have created your self-signed certificate using Web Based Management.

1. Right-click the **Microsoft Edge** icon, and then click **Run as administrator**.

   If the **User Account Control** screen appears, click **Yes**.
2. Type "https://machine's IP address" in your browser's address bar (where "machine's IP address" is your machine's IP address).

   For example:

   https://192.168.1.2
3. If your connection is not private, click the **Advanced** button, and then continue to the web page.
4. If required, type the password in the **Login** field, and then click **Login**.

   The default password to manage this machine's settings is located on the bottom of the machine and marked "**Pwd**". Change the default password by following the on-screen instructions when you first log in.
5. In the left navigation bar, click **Network** > **Security** > **Certificate**.

   If the left navigation bar is not visible, start navigating from ≡.
6. Click **Export**.
7. To encrypt the output file, type a password in the **Enter password** field. If the **Enter password** field is blank, your output file will not be encrypted.
8. Type the password again in the **Retype password** field, and then click **Submit**.
9. Click the downloaded file to open it.
10. When the **Certificate Import Wizard** appears, click **Next**.
11. Click **Next**.
12. If required, type a password, and then click **Next**.
13. Select **Place all certificates in the following store**, and then click **Browse…**.
14. Select the **Trusted Root Certification Authorities**, and then click **OK**.
15. Click **Next**.
16. Click **Finish**.
17. Click **Yes**, if the fingerprint (thumbprint) is correct.
18. Click **OK**.

Related Information

- Manage Your Network Machine Securely Using SSL/TLS

Related Topics:

- Create a Self-signed Certificate

Use SNMPv3

Related Models: ADS-1350W/ADS-1800W

- Manage Your Network Machine Securely Using SNMPv3

Manage Your Network Machine Securely Using SNMPv3

Related Models: ADS-1350W/ADS-1800W

The Simple Network Management Protocol version 3 (SNMPv3) provides user authentication and data encryption to manage network devices securely. To manage your network machine securely, we recommend using the SNMPv3 protocol when you use BRAdmin Professional 4.

1. Start your web browser.
2. Type "https://machine's IP address" in your browser's address bar (where "machine's IP address" is the machine's IP address).

   For example:

   https://192.168.1.2
3. If required, type the password in the **Login** field, and then click **Login**.

The default password to manage this machine's settings is located on the bottom of the machine and marked "**Pwd**". Change the default password by following the on-screen instructions when you first log in.

4. In the left navigation bar, click **Network** > **Network** > **Protocol**.

If the left navigation bar is not visible, start navigating from ≡.

5. Make sure the **SNMP** setting is enabled, and then click **Advanced Settings**.
6. Configure the SNMP settings. There are three options for **SNMP Mode of Operation**.

Option	Description
SNMP v1/v2c read-write access	The scan server uses version 1 and version 2c of the SNMP protocol. You can use all Brother applications in this mode. However, it is not secure since it will not authenticate the user, and data will not be encrypted.
SNMPv3 read-write access and v1/v2c read-only access	The scan server uses the read-write access of version 3 and the read-only access of version 1 and version 2c of the SNMP protocol. When you use **SNMPv3 read-write access and v1/v2c read-only access** mode, some Brother applications (such as BRAdmin Light) that access the scan server do not work correctly since they authorize the read-only access of version 1 and version 2c. If you want to use all applications, we recommend using the **SNMP v1/v2c read-write access** mode.
SNMPv3 read-write access	The scan server uses version 3 of the SNMP protocol. If you want to manage the scan server securely, use this mode. When you use the **SNMPv3 read-write access** mode, note the following: • You can use only BRAdmin Professional or Web Based Management to manage the scan server. • Except for BRAdmin Professional, all applications that use SNMPv1/v2c will be restricted. To allow the use of SNMPv1/v2c applications, use the **SNMPv3 read-write access and v1/v2c read-only access** or **SNMP v1/v2c read-write access** mode.

7. Click **Submit**.

Related Information

- Use SNMPv3

Related Topics:

- Access Web Based Management

Use IEEE 802.1x Authentication

Related Models: ADS-1350W/ADS-1800W

- What Is IEEE 802.1x Authentication?
- Configure IEEE 802.1x Authentication for Your Network Using Web Based Management (Web Browser)
- IEEE 802.1x Authentication Methods

What Is IEEE 802.1x Authentication?

Related Models: ADS-1350W/ADS-1800W

IEEE 802.1x is an IEEE standard that limits access from unauthorised network devices. Your Brother machine sends an authentication request to a RADIUS server (Authentication server) through your access point or hub. After your request has been verified by the RADIUS server, your machine can access the network.

Related Information

- Use IEEE 802.1x Authentication

Configure IEEE 802.1x Authentication for Your Network Using Web Based Management (Web Browser)

Related Models: ADS-1350W/ADS-1800W

- If you configure your machine using EAP-TLS authentication, you must install the client certificate issued by a CA before you start configuration. Contact your network administrator about the client certificate. If you have installed more than one certificate, we recommend writing down the certificate name you want to use.
- Before you verify the server certificate, you must import the CA certificate issued by the CA that signed the server certificate. Contact your network administrator or your Internet Service Provider (ISP) to confirm whether a CA certificate import is necessary.

1. Start your web browser.
2. Type "https://machine's IP address" in your browser's address bar (where "machine's IP address" is the machine's IP address).

   For example:

   https://192.168.1.2
3. If required, type the password in the **Login** field, and then click **Login**.

The default password to manage this machine's settings is located on the bottom of the machine and marked "**Pwd**". Change the default password by following the on-screen instructions when you first log in.

4. In the left navigation bar, click **Network**.

If the left navigation bar is not visible, start navigating from ≡.

5. Click **Wireless** > **Wireless (Enterprise)**.
6. Configure the IEEE 802.1x authentication settings.

- If you are using **EAP-TLS** authentication, you must select the client certificate installed (shown with certificate name) for verification from the **Client Certificate** drop-down list.
- If you select **EAP-FAST**, **PEAP**, **EAP-TTLS**, or **EAP-TLS** authentication, select the verification method from the **Server Certificate Verification** drop-down list. Verify the server certificate using the CA certificate, imported to the machine in advance, issued by the CA that signed the server certificate.

Select one of the following verification methods from the **Server Certificate Verification** drop-down list:

Option	Description
No Verification	The server certificate can always be trusted. The verification is not performed.
CA Cert.	The verification method to check the CA reliability of the server certificate, using the CA certificate issued by the CA that signed the server certificate.
CA Cert. + ServerID	The verification method to check the common name [1] value of the server certificate, in addition to the CA reliability of the server certificate.

7. When finished with configuration, click **Submit**.

1 The common name verification compares the common name of the server certificate to the character string configured for the **Server ID**. Before you use this method, contact your system administrator about the server certificate's common name and then configure **Server ID**.

Related Information

- Use IEEE 802.1x Authentication

Related Topics:

- Access Web Based Management
- Configure Certificates for Device Security
- Supported Security Certificate Features

IEEE 802.1x Authentication Methods

Related Models: ADS-1350W/ADS-1800W

EAP-FAST

Extensible Authentication Protocol-Flexible Authentication via Secured Tunneling (EAP-FAST) has been developed by Cisco Systems, Inc., which uses a user ID and password for authentication, and symmetric key algorithms to achieve a tunnelled authentication process.

The Brother machine supports the following inner authentication methods:

- EAP-FAST/NONE
- EAP-FAST/MS-CHAPv2
- EAP-FAST/GTC

PEAP

Protected Extensible Authentication Protocol (PEAP) is a version of EAP method developed by Cisco Systems, Inc., Microsoft Corporation and RSA Security. PEAP creates an encrypted Secure Sockets Layer (SSL)/Transport Layer Security (TLS) tunnel between a client and an authentication server, for sending a user ID and password. PEAP provides mutual authentication between the server and the client.

The Brother machine supports the following inner authentications:

- PEAP/MS-CHAPv2
- PEAP/GTC

EAP-TTLS

Extensible Authentication Protocol-Tunneled Transport Layer Security (EAP-TTLS) has been developed by Funk Software and Certicom. EAP-TTLS creates a similar encrypted SSL tunnel to PEAP, between a client and an authentication server, for sending a user ID and password. EAP-TTLS provides mutual authentication between the server and the client.

Your Brother machine supports only MS-CHAPv2 as an internal authentication method.

EAP-TLS

Extensible Authentication Protocol-Transport Layer Security (EAP-TLS) requires digital certificate authentication both at a client and an authentication server.

Related Information

- Use IEEE 802.1x Authentication

Use Active Directory Authentication

Related Models: ADS-1800W

- Introduction to Active Directory Authentication
- Configure Active Directory Authentication Using Web Based Management
- Log On to Change the Machine Settings Using the Machine's Control Panel (Active Directory Authentication)

Introduction to Active Directory Authentication

Related Models: ADS-1800W

Active Directory Authentication restricts the use of your machine. If Active Directory Authentication is enabled, the machine's control panel will be locked. You cannot change the machine's settings until you enter a User ID and password.

Active Directory Authentication offers the following feature:

Obtains the email address from the Active Directory server based on your User ID, when sending scanned data to an email server.

To use this feature, select the **On** option for the **Get Mail Address** setting, and the **LDAP + kerberos** or **LDAP + NTLMv2** authentication method. Your email address will be set as the sender when the machine sends scanned data to an email server, or as the recipient if you want to send the scanned data to your email address.

You can change the Active Directory Authentication settings using Web Based Management.

Related Information

- Use Active Directory Authentication

Configure Active Directory Authentication Using Web Based Management

Related Models: ADS-1800W

Active Directory authentication supports Kerberos authentication and NTLMv2 authentication. You must configure the SNTP protocol (network time server) and DNS server configuration for authentication.

1. Start your web browser.
2. Type "https://machine's IP address" in your browser's address bar (where "machine's IP address" is the machine's IP address).

   For example:

   https://192.168.1.2
3. If required, type the password in the **Login** field, and then click **Login**.

The default password to manage this machine's settings is located on the bottom of the machine and marked "**Pwd**". Change the default password by following the on-screen instructions when you first log in.

4. In the left navigation bar, click **Administrator** > **User Restriction Function**.

If the left navigation bar is not visible, start navigating from ≡.

5. Select **Active Directory Authentication**.
6. Click **Submit**.
7. Select the **Active Directory Authentication** menu.
8. Configure the following settings:

Option	Description
Remember User ID	Select this option to save your User ID.
Active Directory Server Address	Type the IP address or the server name (for example: ad.example.com) of the Active Directory Server.
Active Directory Domain Name	Type the Active Directory domain name.
Protocol & Authentication Method	Select the protocol and authentication method.
Get Mail Address	Select this option to obtain logged on user's email address from the Active Directory server. (Available for the **LDAP + kerberos** or **LDAP + NTLMv2** authentication methods.)
Get User's Home Directory	Select this option to obtain your home directory as the Scan to Network destination. (Available for the **LDAP + kerberos** or **LDAP + NTLMv2** authentication methods.)
SSL/TLS	Set an **SSL/TLS** option to use SSL/TLS communication. (Available for the **LDAP + NTLMv2** authentication methods.)
LDAP Server Port	Type the port number to connect the Active Directory server via LDAP. (Available for the **LDAP + kerberos** or **LDAP + NTLMv2** authentication methods.)

Option	Description
LDAP Search Root	Type the LDAP search root. (Available for the **LDAP + kerberos** or **LDAP + NTLMv2** authentication methods.)

9. Click **Submit**.

Related Information

- Use Active Directory Authentication

Related Topics:

- Access Web Based Management

Log On to Change the Machine Settings Using the Machine's Control Panel (Active Directory Authentication)

Related Models: ADS-1800W

When Active Directory Authentication is enabled, the machine's control panel will be locked until you enter your User ID and password on the machine's control panel.

1. On the machine's control panel, use the touchscreen to enter your User ID and Password.
2. Press [OK].

When authentication is successful, the machine's control panel will be unlocked.

Related Information

- Use Active Directory Authentication

Use LDAP Authentication

Related Models: ADS-1800W

- Introduction to LDAP Authentication
- Configure LDAP Authentication Using Web Based Management
- Log On to Change the Machine Settings Using the Machine's Control Panel (LDAP Authentication)

Introduction to LDAP Authentication

Related Models: ADS-1800W

LDAP Authentication restricts the use of your machine. If LDAP Authentication is enabled, the machine's control panel will be locked. You cannot change the machine's settings until you enter a User ID and password.

LDAP Authentication offers the following feature:

Obtains the email address from the LDAP server based on your User ID, when sending scanned data to an email server.

To use this feature, select the **On** option for the **Get Mail Address** setting. Your email address will be set as the sender when the machine sends scanned data to an email server, or as the recipient if you want to send the scanned data to your email address.

You can change the LDAP Authentication settings using Web Based Management.

Related Information

- Use LDAP Authentication

Configure LDAP Authentication Using Web Based Management

Related Models: ADS-1800W

1. Start your web browser.
2. Type "https://machine's IP address" in your browser's address bar (where "machine's IP address" is the machine's IP address).

   For example:

   https://192.168.1.2
3. If required, type the password in the **Login** field, and then click **Login**.

The default password to manage this machine's settings is located on the bottom of the machine and marked "**Pwd**". Change the default password by following the on-screen instructions when you first log in.

4. In the left navigation bar, click **Administrator** > **User Restriction Function**.

If the left navigation bar is not visible, start navigating from ≡.

5. Select **LDAP Authentication**.
6. Click **Submit**.
7. Click the **LDAP Authentication** menu.
8. Configure the following settings:

Option	Description
Remember User ID	Select this option to save your User ID.
LDAP Server Address	Type the IP address or the server name (for example: ldap.example.com) of the LDAP server.
Get Mail Address	Select this option to obtain the logged user's email address from the LDAP server.
Get User's Home Directory	Select this option to obtain your home directory as the Scan to Network destination.
SSL/TLS	Set the **SSL/TLS** option to use SSL/TLS communication.
LDAP Server Port	Type the LDAP server port number.
LDAP Search Root	Type the LDAP search root directory.
Attribute of Name (Search Key)	Type the attribute you want to use as a search key.

9. Click **Submit**.

Related Information

- Use LDAP Authentication

Related Topics:

- Access Web Based Management

Log On to Change the Machine Settings Using the Machine's Control Panel (LDAP Authentication)

Related Models: ADS-1800W

When LDAP Authentication is enabled, the machine's control panel will be locked until you enter your User ID and password on the machine's control panel.

1. On the machine's control panel, use the touchscreen to enter your User ID and Password.
2. Press [OK].

When authentication is successful, the machine's control panel will be unlocked.

Related Information

- Use LDAP Authentication

Use Secure Function Lock 3.0

Related Models: ADS-1800W

- Before Using Secure Function Lock 3.0
- Configure Secure Function Lock 3.0 Using Web Based Management
- Configure Public Mode for Secure Function Lock 3.0
- Register an External IC Card Reader

Before Using Secure Function Lock 3.0

Related Models: ADS-1800W

Secure Function Lock lets you restrict public access to the following machine operations:

- Scan to Web (supported models only)
- Scan to PC/Scan to Workflow
- Scan to Network
- Scan to FTP/SFTP
- Scan to Email Server
- Scan to SharePoint (supported models only)
- Scan to Apps (supported models only)
- Scan to USB
- Scan to WSS (Web Service Scan) (supported models only)

Secure Function Lock also prevents users from changing the default settings from the machine by limiting access to the machine's settings.

Before using the security features you should first enter an administrator password. The administrator can set up restrictions for individual users along with a user password. Carefully write down your password. If you forget it, you will have to reset the password stored in the machine. For more information about how to reset the password, contact Brother customer service.

- Only administrators can set limitations and make changes for each user.
- When Secure Function Lock is enabled, the machine is in Public Mode. To access any machine functions that have been restricted using Secure Function Lock, press , select your user name, and enter your password.

Related Information

- Use Secure Function Lock 3.0

Configure Secure Function Lock 3.0 Using Web Based Management

Related Models: ADS-1800W

1. Start your web browser.
2. Type "https://machine's IP address" in your browser's address bar (where "machine's IP address" is the machine's IP address).

   For example:

   https://192.168.1.2
3. If required, type the password in the **Login** field, and then click **Login**.

The default password to manage this machine's settings is located on the bottom of the machine and marked "**Pwd**". Change the default password by following the on-screen instructions when you first log in.

4. In the left navigation bar, click **Administrator** > **Restriction Management** or **User Restriction Function**.

If the left navigation bar is not visible, start navigating from ≡.

5. Select **Secure Function Lock**.
6. Click **Submit**.
7. Click the **Restricted Functions** menu.
8. In the **User List / Restricted Functions** field, type a group name or user name.
9. In the **Scan to** columns, select a checkbox to allow, or clear a checkbox to restrict, the function listed.
10. Click **Submit**.
11. Click the **User List** menu.
12. In the **User List** field, type the user name.
13. In the **Password** field, type a password.

The number of characters you can set differs depending on the model.

14. In the **E-mail Address** field, type the user's email address (available only for certain models).
15. To register the user's Card ID, type the card number in the **Card ID (NFC ID)** field.
16. Select **User List / Restricted Functions** from the drop-down list for each user.
17. Click **Submit**.

You can also change the user list lockout settings in the **Secure Function Lock** menu.

Related Information

- Use Secure Function Lock 3.0

Related Topics:

- Access Web Based Management

Configure Public Mode for Secure Function Lock 3.0

Related Models: ADS-1800W

Use the Secure Function Lock screen to set up Public Mode, which limits the functions available to public users. Public users will not need to enter a password to access the features made available through Public Mode settings.

1. Start your web browser.
2. Type "https://machine's IP address" in your browser's address bar (where "machine's IP address" is the machine's IP address).

   For example:

   https://192.168.1.2
3. If required, type the password in the **Login** field, and then click **Login**.

The default password to manage this machine's settings is located on the bottom of the machine and marked "**Pwd**". Change the default password by following the on-screen instructions when you first log in.

4. In the left navigation bar, click **Administrator** > **Restriction Management** or **User Restriction Function**.

If the left navigation bar is not visible, start navigating from ≡.

5. Select **Secure Function Lock**.
6. Click **Submit**.
7. Click the **Restricted Functions** menu.
8. In the **Public Mode** row, select a checkbox to allow or clear a checkbox to restrict the function listed.
9. Click **Submit**.

Related Information

- Use Secure Function Lock 3.0

Related Topics:

- Access Web Based Management

Register an External IC Card Reader

Related Models: ADS-1800W

When you connect an external IC (Integrated Circuit) card reader, use Web Based Management to register the card reader. Your machine supports HID class driver supported external IC card readers.

1. Start your web browser.
2. Type "https://machine's IP address" in your browser's address bar (where "machine's IP address" is the machine's IP address).

   For example:

   https://192.168.1.2
3. If required, type the password in the **Login** field, and then click **Login**.

   The default password to manage this machine's settings is located on the bottom of the machine and marked "**Pwd**". Change the default password by following the on-screen instructions when you first log in.
4. In the left navigation bar, click **Administrator** > **External Card Reader**.

   If the left navigation bar is not visible, start navigating from ≡.
5. Enter the necessary information, and then click **Submit**.
6. Connect the card reader to your machine.

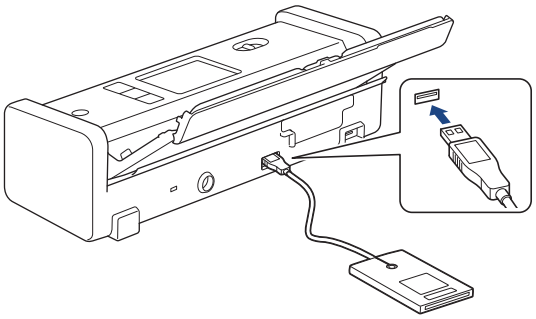

7. Touch the card to the card reader when using card authentication.

Related Information

- Use Secure Function Lock 3.0

Related Topics:

- Access Web Based Management

Send an Email Securely

Related Models: ADS-1800W

- Configure Email Sending Using Web Based Management
- Send an Email with User Authentication
- Send an Email Securely Using SSL/TLS

Configure Email Sending Using Web Based Management

Related Models: ADS-1800W

We recommend using Web Based Management to configure secured email sending with user authentication, or email sending using SSL/TLS.

1. Start your web browser.
2. Type "https://machine's IP address" in your browser's address bar (where "machine's IP address" is the machine's IP address).

   For example:

   https://192.168.1.2
3. If required, type the password in the **Login** field, and then click **Login**.

   The default password to manage this machine's settings is located on the bottom of the machine and marked "**Pwd**". Change the default password by following the on-screen instructions when you first log in.
4. In the left navigation bar, click **Network** > **Network** > **Protocol**.

   If the left navigation bar is not visible, start navigating from ≡.
5. In the **SMTP** field, click **Advanced Settings** and make sure the status of **SMTP** is **Enabled**.
6. Configure the **SMTP** settings.
   - Confirm that the email settings are correct after configuration by sending a test email.
   - If you do not know the SMTP server settings, contact your network administrator or Internet Service Provider (ISP).
7. When finished, click **Submit**.
8. Follow the instructions in the dialog box to test the current settings.

Related Information

- Send an Email Securely

Related Topics:

- Access Web Based Management

Send an Email with User Authentication

Related Models: ADS-1800W

Your machine supports the SMTP-AUTH method to send email via an email server that requires user authentication. This method prevents unauthorised users from accessing the email server.

You can use the SMTP-AUTH method for email notification and email reports (available for certain models).

We recommend using Web Based Management to configure the SMTP authentication.

Email Server Settings

You must configure your machine's SMTP authentication method to match the method used by your email server. For details about your email server settings, contact your network administrator or Internet Service Provider (ISP).

To enable SMTP server authentication: in the Web Based Management **SMTP** screen, under **Server Authentication Method**, you must select **SMTP-AUTH**.

Related Information

- Send an Email Securely

Send an Email Securely Using SSL/TLS

Related Models: ADS-1800W

Your machine supports SSL/TLS communication methods. To use an email server that is using SSL/TLS communication, you must configure the following settings.

We recommend using Web Based Management to configure SSL/TLS.

Verify Server Certificate

If you need to verify the server certificate, select the **Verify Server Certificate** checkbox under **SSL/TLS**.

Before you verify the server certificate, you must import the CA certificate issued by the CA that signed the server certificate. Contact your network administrator or your Internet Service Provider (ISP) to confirm if importing a CA certificate is necessary.

Port Number

If you select **SSL**, or **TLS**, the **Port** value will be changed to match the protocol. To change the port number manually, type the port number after you select **SSL/TLS** settings.

You must configure your machine's communication method to match the method used by your email server. For details about your email server settings, contact your network administrator or your ISP.

In most cases, the secured webmail services require the following settings:

SMTP	**Port**	587
	Server Authentication Method	**SMTP-AUTH**
	SSL/TLS	**TLS**

Related Information

- Send an Email Securely

Related Topics:

- Configure Certificates for Device Security

Lock the Machine Settings from the Control Panel

Related Models: ADS-1800W

Before turning on the machine's Setting Lock, make a careful note of your password. If you forget the password, you must reset all passwords stored in the machine by contacting your administrator or Brother customer service.

- Setting Lock Overview

Setting Lock Overview

Related Models: ADS-1800W

Use the Setting Lock feature to block unauthorised access to machine settings.
When Setting Lock is set to On, you cannot access the machine settings without entering the password.

Remote Setup will not launch when Setting Lock is set to On.

- Set or Change the Setting Lock Password
- Turn Setting Lock On

Set or Change the Setting Lock Password

Related Models: ADS-1800W

1. Press [Settings] > [General Setup] > [Setting Lock].

To change the password, press [Settings] > [General Setup] > [Setting Lock] > [Set Password], and then enter your existing four-digit password. Press [OK].

2. Enter a four-digit number for the password using numbers 0-9. Press [OK].
3. When the touchscreen displays [Verify:], re-enter the new password. Press [OK].
4. Press .

Related Information

- Setting Lock Overview

Turn Setting Lock On

Related Models: ADS-1800W

Use the Setting Lock feature to block unauthorised access to machine settings.
When Setting Lock is set to On, you cannot access the machine settings without entering the password.

1. Press [Settings] > [General Setup] > [Setting Lock] > [Lock Off=>On].
2. Enter the current four-digit password. Press [OK].

To turn Setting Lock off, press on the touchscreen, enter the current four-digit password, and then press [OK].

Related Information

- Setting Lock Overview

Brother Web Connect

Related Models: ADS-1800W

- Brother Web Connect Overview
- Online Services Used with Brother Web Connect
- Set Up Brother Web Connect
- Scan and Upload Documents Using Brother Web Connect

Brother Web Connect Overview

Related Models: ADS-1800W

Certain websites provide services that allow users to upload and view images and files on the website. Your Brother machine can scan images and upload them to these services.

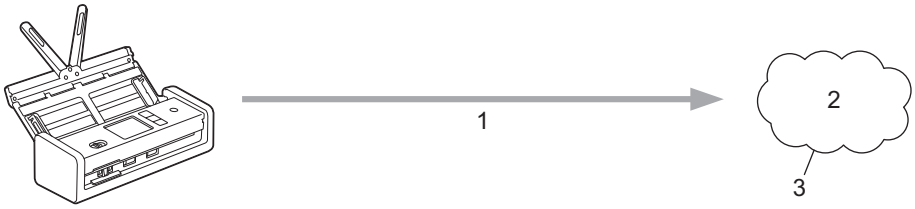

1. Scanning
2. Photos, images, documents and other files
3. Web Service

To use Brother Web Connect, your Brother machine must be connected to a network that has access to the Internet, through either a wired or wireless connection.

For network setups that use a proxy server, the machine must also be configured to use a proxy server. If you are unsure of your network configuration, check with your network administrator.

A proxy server is a computer that serves as an intermediary between computers without a direct Internet connection, and the Internet.

Press ([Web]) or ([Apps]) on the touchscreen to use Brother Web Connect.

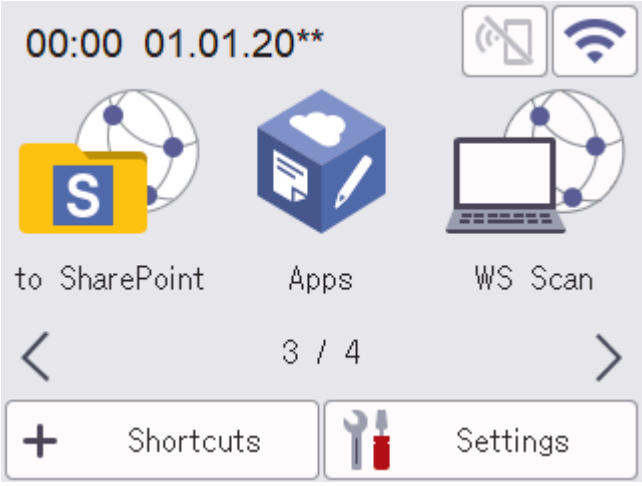

Related Information

- Brother Web Connect
  - Configure the Proxy Server Settings Using Web Based Management

Configure the Proxy Server Settings Using Web Based Management

Related Models: ADS-1800W

If your network uses a proxy server, the following proxy server information must be configured using Web Based Management:

- Proxy server address
- Port number
- User Name
- Password

- We recommend using the latest version of the following web browsers:
  - Microsoft Edge, Firefox, and Google Chrome™ for Windows
  - Safari, Firefox, and Google Chrome™ for Mac
  - Google Chrome™ for Android™
  - Safari and Google Chrome™ for iOS
- Ensure that JavaScript and Cookies are always enabled, regardless of which browser you use.

1. Start your web browser.
2. Type "https://machine's IP address" in your browser's address bar (where "machine's IP address" is your machine's IP address).

   For example:

   https://192.168.1.2
3. If required, type the password in the **Login** field, and then click **Login**.

The default password to manage this machine's settings is located on the bottom of the machine and marked "**Pwd**". Change the default password by following the on-screen instructions when you first log in.

4. In the left navigation bar, click **Network** > **Network** > **Protocol**.

If the left navigation bar is not visible, start navigating from ≡.

5. Make sure the **Proxy** checkbox is selected, and then click **Submit**.
6. In the **Proxy** field, click **Advanced Settings**.
7. Enter the proxy server information.
8. Click **Submit**.

Related Information

- Brother Web Connect Overview

Related Topics:

- Access Web Based Management

Online Services Used with Brother Web Connect

Related Models: ADS-1800W

Use Brother Web Connect to access online services from your Brother machine. Some of these web services offer business versions.

To use Brother Web Connect, you must have an account with the online service you want to use. If you do not already have an account, use a computer to access the service's website and create an account.

Google Drive™

An online document storage, editing, sharing and file synchronisation service.

URL: drive.google.com

Evernote®

An online file storage and management service.

URL: www.evernote.com

Dropbox

An online file storage, sharing and synchronisation service.

URL: www.dropbox.com

OneDrive

An online file storage, sharing and management service.

URL: https://onedrive.live.com

Box

An online document editing and sharing service.

URL: www.box.com

OneNote

An online document editing and sharing service.

URL: www.onenote.com

SharePoint Online

An online content storage, sharing, and managing service for businesses.

For more information about any of these services, refer to the respective service's website.

The following table describes which file types can be used with each Brother Web Connect feature:

Accessible Services	Google Drive™ Evernote® Dropbox OneDrive Box OneNote SharePoint Online
Upload scanned images	JPEG PDF DOCX XLSX PPTX TIFF

- Not all services are available in all countries.
- For Hong Kong, Taiwan and Korea:

  Brother Web Connect supports only file names written in English. Files named in the local language will not be downloaded.

Related Information

- Brother Web Connect

Set Up Brother Web Connect

Related Models: ADS-1800W

- Brother Web Connect Setup Overview
- Create an Account for Each Online Service Before Using Brother Web Connect
- Apply for Brother Web Connect Access
- Register an Account on Your Brother Machine for Brother Web Connect

Brother Web Connect Setup Overview

Related Models: ADS-1800W

Step 1: Create an account with the service you want to use.

Access the service's website using a computer and create an account. (If you already have an account, there is no need to create an additional account.)

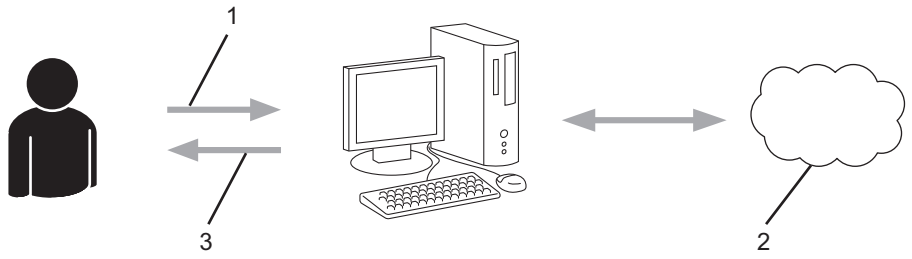

1. User registration
2. Web Service
3. Obtain account

Step 2: Apply for Brother Web Connect access.

Start Brother Web Connect access using a computer and obtain a temporary ID.

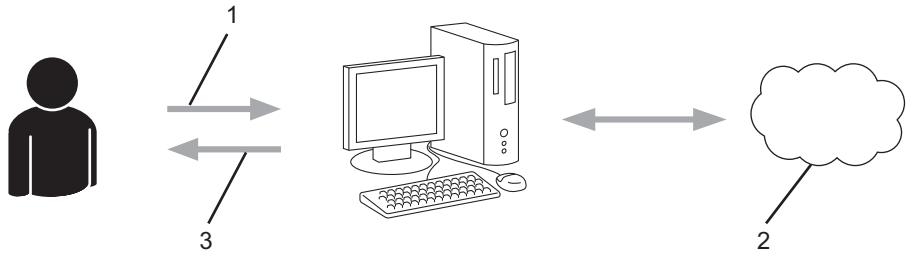

1. Enter account information
2. Brother Web Connect application page
3. Obtain temporary ID

Step 3: Register your account information on your machine so you can access the service you want to use.

Enter the temporary ID to enable the service on your machine. Specify the account name as you would like it to be displayed on the machine, and enter a PIN if you would like to use one.

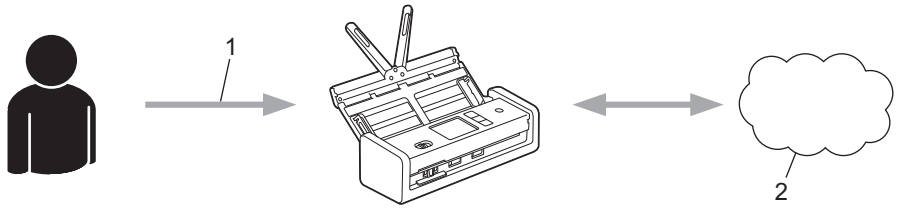

1. Enter temporary ID
2. Web Service

Your Brother machine can now use the service.

Related Information

- Set Up Brother Web Connect

Create an Account for Each Online Service Before Using Brother Web Connect

Related Models: ADS-1800W

To use Brother Web Connect to access an online service, you must have an account with that online service. If you do not already have an account, use a computer to access the service's website and create an account. After creating an account, log on and use the account once with a computer before using the Brother Web Connect feature. Otherwise, you may not be able to access the service using Brother Web Connect.

If you already have an account, there is no need to create an additional account.

After you finish creating an account with the online service you want to use, apply for Brother Web Connect access.

Related Information

- Set Up Brother Web Connect

Apply for Brother Web Connect Access

Related Models: ADS-1800W

To use Brother Web Connect to access online services, you must first apply for Brother Web Connect access using a computer that has the Brother Software installed.

1. Access the Brother Web Connect application website:

Option	Description
Windows	Launch (**Brother Utilities**), and then click the drop-down list and select your model name (if not already selected). Click **Do More** in the left navigation bar, and then click **Brother Web Connect**. You can also access the website directly: Type bwc.brother.com into your web browser's address bar.
Mac	Type bwc.brother.com into your web browser's address bar.

   The Brother Web Connect page launches.
2. Select the service you want to use.
3. Follow the on-screen instructions and apply for access.
   When finished, your temporary ID appears.

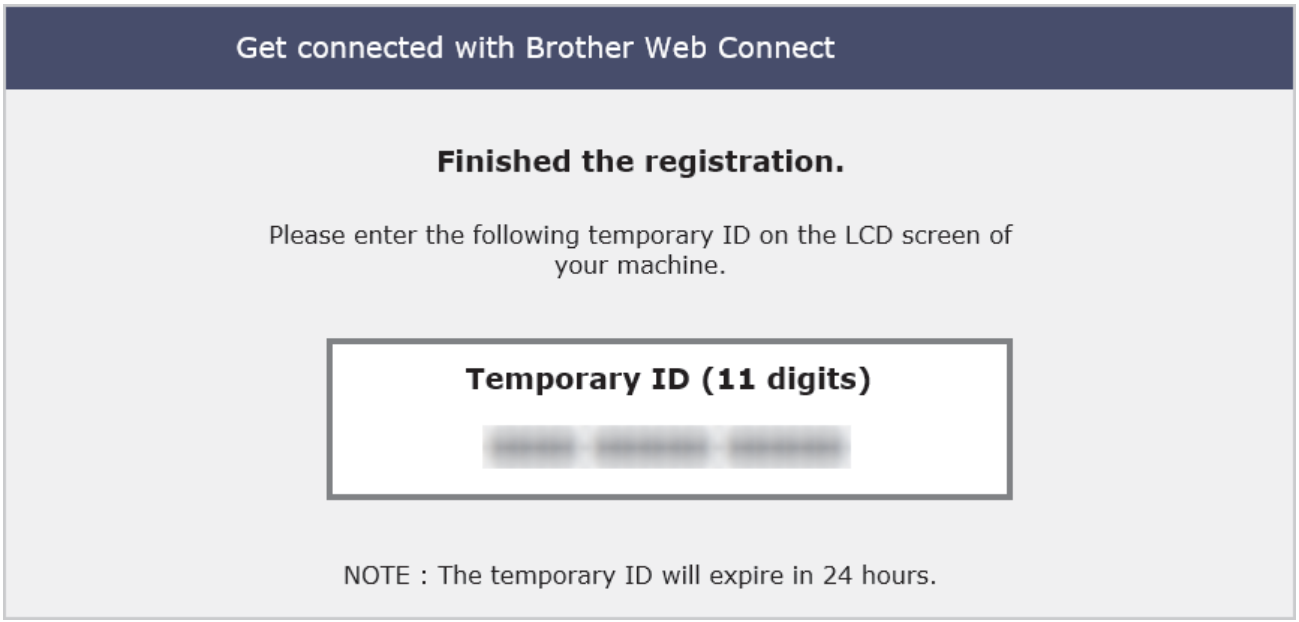

4. Make a note of your temporary ID as you will need it to register accounts to the machine. The temporary ID is valid for 24 hours.
5. Close the web browser.

Now that you have a Brother Web Connect access ID, you must register this ID on your machine, and then use your machine to access the web service you want to use.

Related Information

- Set Up Brother Web Connect

Register an Account on Your Brother Machine for Brother Web Connect

Related Models: ADS-1800W

You must enter your Brother Web Connect account information and configure your machine so that it can use Brother Web Connect to access the service you want.

- You must apply for Brother Web Connect access to register an account on your machine.
- Before you register an account, confirm that the correct date and time are set on the machine's control panel.

1. Press ◀ or ▶ to display [Web], and press it.

   - If information regarding the Internet connection appears on the machine's LCD, read the information and press [OK].
   - Occasionally, updates or announcements about Brother Web Connect's features will appear on the LCD. Read the information, and then press [OK].

2. If the information regarding licence agreement appears, make your selection and follow the on-screen instructions.
3. Press ▲ or ▼ to display the service with which you want to register.

   Press the service name.
4. If information regarding Brother Web Connect appears, press [OK].
5. Press [Register/Delete Account] > [Register Account].
6. The machine will prompt you to enter the temporary ID you received when you applied for Brother Web Connect access.

   Press [OK].
7. Enter the temporary ID using the LCD, and then press [OK].

   An error message will appear on the LCD if the information you entered does not match the temporary ID you received when you applied for access, or if the temporary ID has expired. Either enter the temporary ID correctly, or apply for access again and receive a new temporary ID.

8. The machine will prompt you to enter the account name that you want to be displayed on the LCD.

   Press [OK].
9. Enter the name using the LCD, and then press [OK].
10. Do one of the following:
    - To set a PIN for the account, press [Yes]. (A PIN prevents unauthorised access to the account.) Enter a four-digit number and press [OK].
    - If you do not want to set a PIN, press [No].

    When the account information you entered appears, confirm that it is correct.

11. Press [Yes] to register your information as entered.
12. Press [OK].

    Account registration is complete and your machine can now access the service.
13. Press .

Related Information

- Set Up Brother Web Connect

Scan and Upload Documents Using Brother Web Connect

Related Models: ADS-1800W

Upload your scanned photos and documents directly to a web service without using a computer.

- When scanning and uploading JPEG files or searchable PDF, monochrome scanning is not available.
- When scanning and uploading Microsoft Office files, monochrome scanning and grey scanning are not available.
- When scanning and uploading JPEG files, each page is uploaded as a separate file.
- Uploaded documents are saved in an album named **From_BrotherDevice**.

For information regarding restrictions, such as the size or number of documents that can be uploaded, refer to the respective service's website.

If you are a restricted Web Connect user due to the Secure Function Lock feature (available for certain models), you cannot upload the scanned data.

1. Load your document.
2. Press ◀ or ▶ to display [Web], and press it.

- If information regarding the Internet connection appears on the machine's LCD, read the information and press [OK].
- Occasionally, updates or announcements about Brother Web Connect's features will appear on the LCD. Read the information, and then press [OK].

3. Press ▲ or ▼ to display the service that hosts the account to which you want to upload.

   Press the service name.
4. Press ▲ or ▼ to display your account name, and then press it.
5. If the PIN entry screen appears, enter the four-digit PIN and press [OK].
6. Follow the on-screen instructions to complete this operation.

Related Information

- Brother Web Connect

Troubleshooting

- Error and Maintenance Messages
- Error and Maintenance LEDs
- Document Jam
- Card Jam
- If You Are Having Difficulty with Your Machine
- Check the Serial Number
- Reset Your Brother Machine
- Reset the Usage Counters

Error and Maintenance Messages

Related Models: ADS-1800W

As with any sophisticated office product, errors may occur and supply items must be replaced eventually. If this happens, your machine identifies the error or required routine maintenance and displays the appropriate message. The most common error and maintenance messages are shown in the table below.

You can correct most errors and clear routine maintenance messages yourself. If you need further information, go to your model's **FAQs & Troubleshooting** page at support.brother.com/faqs.

Error Message	Cause	Action
Access Denied	Secure Function Lock is On.	Contact your administrator to check your Secure Function Lock settings. See *Related Information*: *Use Secure Function Lock 3.0*.
Authenticate Err	The password entered in Scan to Network was incorrect.	Enter the correct password. If you forgot it, you must reset it. See *Related Information*: *Set up a Scan to Network Profile*.
Both Document and Card set	The ADF and the Card Slot are both loaded with a document and a card.	Load either the ADF or the Card Slot, whichever one you want to scan from.
Cannot Find Workflow	• Workflow was not created. • Workflow was deleted. • Workflow was not configured correctly.	Make sure that Workflow is created and configured correctly in Brother iPrint&Scan (for Windows and Mac). See *Related Information*:*Configure Scan to Workflow Settings Using Brother iPrint&Scan*.
Card JAM	• The power came on when the plastic card was inserted in the machine. • The embossed card was inserted in the Card Slot with the embossed side down. • The card was inserted diagonally. • The plastic card is not inserted according to the guidelines.	• Remove the plastic card. To prevent the card from getting jammed again, do not leave the card inserted in the machine. • Remove the plastic card. Insert the embossed card, embossed side up, into the Card Slot. • Remove the plastic card. Insert the plastic card straight according to the guidelines. See *Related Information*:*Card Jam*.
Check Connection	The machine is not connected to the network.	Check the network connection.
	The computer and machine are not connected using a USB cable.	Connect the USB cable. If a USB flash drive is inserted into the machine, remove it.
Clean Document Position Sensor /Clean Card Sensor	The sensor is dirty with paper dust.	Clean the sensor. See *Related Information*:*Clean the Sensors*.
Confirm the following and try again. - Check the network connection. and make sure the correct Date&Time is set.	There is a problem with the settings in the machine and/or server.	Make sure your machine is connected to a network with Internet access. Verify that the date and time are set correctly on your machine.
	The computer and machine are not connected using a USB cable.	Connect the USB cable. If a USB flash drive is inserted into the machine, remove it.

Error Message	Cause	Action
Connection Failed	The machine could not connect to the network.	Check the following: • The PIN is correct. • You did not press the WPS button on more than one wireless access point/ router. • The wireless access point/router is turned on. • Restart the machine and the wireless access point/router.
Document Jam	• The Paper Guides are not set to the correct document size. • The settings are not appropriate for your document. • Paper dust has accumulated on the surface of the Pick Up Roller or Separation Pad. • The document was curled.	Clear the document jam, and then do the following: • Gently adjust the Paper Guides to fit the width of your document. When Scan Size is set to Auto and you are scanning a document that contains multiple page sizes, insert narrow pages straight and as close to the centre of the machine as possible. If the document does not feed straight, use the continuous scan option. • Confirm the settings. See *Related Information*: *Document Jam*. • Clean the Pick Up Roller and Separation Pad. See *Related Information*: *Clean the Scanner and Rollers*. • Straighten the curled document and scan again.
Feed Selector Error	Feed Selector is set incorrectly.	Set the Feed Selector to the left side when scanning from the ADF, and to the right side when scanning from the Card Slot.
Insufficient USB Storage	The inserted USB flash drive is full.	Press Close, and then do one of the following: • Delete unused files or folders from the USB flash drive, and then try again. • Use a USB flash drive that has more free space.
No Access Point	The machine cannot detect a wireless access point/router that has an active WPS function.	Check the following: • You did not press the WPS button on two or more wireless access point/ routers. • Restart the machine and the wireless access point/router.
No Certificate	The certificate does not exist, or is corrupted.	Start Web Based Management. In the left navigation bar, click **Administrator** > **Signed PDF**, and then configure the settings.
No Document / Card	No document or card is loaded.	Load a document or card. See *Related Information*:*Load Documents*.
No PC found	The machine is not connected to your computer.	Connect the machine to your computer, and then try again.

Error Message	Cause	Action
No Profile found	No Scan to FTP/SFTP profile, Scan to Network profile, or Scan to SharePoint profile is registered.	Configure the Scan to FTP/SFTP profile, the Scan to Network profile, or the Scan to SharePoint profile before using these scanning features. See *Related Information*: *Set up a Scan to FTP Profile*. See *Related Information*: *Set up a Scan to SFTP Profile*. See *Related Information*: *Set up a Scan to Network Profile*. See *Related Information*: *Set up a Scan to SharePoint Profile*.
Power shortage (Code:01)	USB power is insufficient.	• When using a USB Type-C cable, use a computer with a USB Type-C port supporting more than 15 W output or higher. • Use only a Certified USB Type-C cable.
Remove documents	Auto Start Scan Mode was enabled while a document was loaded.	Remove the document, and then reload it.
Replace Pickup Roller	Pick Up Roller has been used for over 100,000 sheets.	Replace the Pick Up Roller with a new one. Scanning errors may occur if you do not replace the part. See *Related Information*: *Replace the Pick Up Roller*.
Replace Separation Pad	The Separation Pad has been used for more than 10,000 sheets.	Replace the Separation Pad with a new one. See *Related Information*:*Replace the Separation Pad*.
Scheduled Maintenance Alert	The Pick Up Roller and Separation Pad have been used for over 5,000 sheets.	Clean the Separation Pad and Pick Up Roller. Paper jams and reduced scan quality issues may occur if you do not clean them. See *Related Information*: *Clean the Scanner and Rollers*.
Security mode does not match the current settings (Authentication method/ Encryption method). Confirm supported security mode and try again.	The security settings are incorrect.	Confirm the security settings and try again.
Sending Error	The Scan to FTP/SFTP profile, Scan to Network profile, Scan to SharePoint profile, or Scan to Email Server is not configured correctly.	Make sure the Scan to FTP/SFTP profile, Scan to Network profile, Scan to SharePoint profile, or Scan to Email Server is configured correctly. Configure the Network Settings.
Server Time out	The machine was disconnected from the Scan to FTP/SFTP profile, Scan to Network profile, Scan to SharePoint profile, or Scan to Email Server.	Make sure the Scan to FTP/SFTP profile, Scan to Network profile, Scan to SharePoint profile, or Scan to Email Server is configured correctly. Configure the Network Settings.
Setting Lock	Adding a new shortcut was attempted while the Setting Lock was turned on.	Disable the Setting Lock.

Error Message	Cause	Action
`Unusable Device`	An unusable device is inserted in the USB port.	Remove the device.
`USB Access Error`	The USB flash drive was removed while it was being accessed.	Insert the USB flash drive.
`USB Host is write protected`	The inserted USB flash drive is write-protected.	Remove the write-protected USB flash drive, press `Close`, and then do one of the following: • Turn the USB flash drive's write-protection off, and then try again. • Use a USB flash drive that is not write-protected.
`USB hub not supported`	A USB flash drive with a hub is inserted in the USB port.	Remove the unsupported device from the USB port.
`Wrong Network Key`	The Network Key is incorrect.	Confirm the Network Key and try again.
`Wrong Password`	The password entered in `Setting Lock` was incorrect.	Enter the correct password. If you forgot it, you must reset it. See *Related Information*: *Set or Change the Setting Lock Password*.
	The password entered in Secure Function Lock was incorrect.	Enter the correct password. Contact your administrator to check your Secure Function Lock settings. See *Related Information*: *Use Secure Function Lock 3.0*.

Related Information

- Troubleshooting
  - Error Messages When Using the Brother Web Connect Feature

Related Topics:

- Use Secure Function Lock 3.0
- Clean the Scanner and Rollers
- Set up a Scan to Network Profile
- Set up a Scan to FTP Profile
- Set up a Scan to SFTP Profile
- Set up a Scan to SharePoint Profile
- Document Jam
- Configure Scan to Workflow Settings Using Brother iPrint&Scan
- Card Jam
- Clean the Sensors
- Load Documents
- Replace the Pick Up Roller
- Replace the Separation Pad
- Set or Change the Setting Lock Password

Error Messages When Using the Brother Web Connect Feature

Related Models: ADS-1800W

Your Brother machine displays an error message if an error occurs. The most common error messages are shown in the chart.

You can correct most errors yourself. If you need more tips, go to your model's **FAQs & Troubleshooting** page at support.brother.com/faqs.

Connection Error

Error Messages	Cause	Action
Connection Error 02	The machine is not connected to a network.	• Verify that the network connection is good. • If the Web or Apps option was pressed soon after the machine was turned on, the network connection may not have been established yet. Wait and try again.
Connection Error 03	• Network or server settings are incorrect. • There is a problem with the network or server.	• Confirm that network settings are correct, or wait and try again later. • If the Web or Apps option was pressed soon after the machine was turned on, the network connection may not have been established yet. Wait and try again.
Connection Error 07	Date and time settings are incorrect.	Set the date and time correctly. Note that if the machine's power cord is disconnected, the date and time settings may have reset to factory settings.

Authentication Error

Error Messages	Cause	Action
Authentication Error 01	The PIN you entered to access the account is incorrect. The PIN is the four-digit number that was entered when registering the account to the machine.	Enter the correct PIN.
Authentication Error 02	The temporary ID that was entered is incorrect.	Enter the correct temporary ID.
	The temporary ID that was entered has expired. A temporary ID is valid for 24 hours.	Apply for Brother Web Connect access again and receive a new temporary ID, and then use the new ID to register the account to the machine.
Authentication Error 03	The name you entered as the display name has already been registered to another service user.	Enter a different display name.

Server Error

Error Messages	Cause	Action
Server Error 01	The machine's authentication information (needed to access the service) has expired or is invalid.	Apply for Brother Web Connect access again to receive a new temporary ID, and then use the new ID to register the account to the machine.
Server Error 03	The file you are trying to upload may have one of the following problems: • The file exceeds the service's limit on number of pixels, file size, etc. • The file type is not supported. • The file is corrupted.	The file cannot be used: • Check the service's size or format restrictions. • Save the file as a different type. • If possible, get a new, uncorrupted version of the file.
Server Error 13	There is a problem with the service and it cannot be used now.	Wait and try again. If you get the message again, access the service from a computer to confirm if it is unavailable.

Shortcut Error

Error Messages	Cause	Action
Shortcut Error 02	The shortcut cannot be used because the account was deleted after the shortcut was registered.	Delete the shortcut, and then register the account and shortcut again.

Related Information

- Error and Maintenance Messages

Error and Maintenance LEDs

Related Models: ADS-1300/ADS-1350W

The LED indicators on the control panel are explained in this table.

If there is an error that you cannot clear yourself, contact your Brother dealer or Brother Customer Service.

Error Indicator	Power Indicator	Description
		The LED is off.
		The LED is on.
		The LED is flashing.

When ○ (USB LED) is off.

Error Indicator	Power Indicator	Machine Status
		Firmware update error This machine cannot boot. Go to your model's **Downloads** page at support.brother.com/downloads, and then download and install the latest firmware.
		Document Jam Clear the document jam. If scanning a long document, select **Long Paper** from the **Scan Size** or **Document Size** drop-down list.
		Pick Up Document Error The machine cannot pick up the document. Open the Front Cover and remove the document. Close the Front Cover and reload your document.
		Front Cover Open The Front Cover is open.
		Access Error (Scan to PC) • The USB cable is not connected to the machine. Connect the USB cable. • (ADS-1350W) If your machine is connected via a network, you must configure the Scan Destination setting using Web Based Management.
		Feed Selector is set incorrectly, or the ADF and the Card Slot are both loaded with a document and a card. • Set the Feed Selector to the left side when scanning from the ADF, and to the right side when scanning from the Card Slot. • Load either the ADF or the Card Slot, whichever one you want to scan from.
		Plastic Card Jam Clear the card jam. If you inserted an embossed card, make sure to insert it embossed side up, into the Card Slot.
		Memory Full

Error Indicator	Power Indicator	Machine Status
		The machine's memory is full. Press ⊗ to clear the data stored in the machine's memory.
		• **Network Connection Error** (ADS-1350W) To restart Wireless Direct and Wireless Network, open the Front Cover, and then press and hold 3 and WPS simultaneously for five seconds. Use this function to solve wireless network problems. • **Wireless Direct Connection Error** (ADS-1350W) To restart Wireless Direct, open the Front Cover, and then press and hold 2 and WPS simultaneously for five seconds. • **Wireless Network Connection Error** (ADS-1350W) To restart Wireless Network, open the Front Cover, and then press and hold 1 and WPS simultaneously for five seconds.
		Updating the Firmware Firmware update in progress. Wait for the update to complete.
		The Scheduled Maintenance counter has exceeded 5,000. Confirm the remaining life in the **Machine Info** dialog box using Remote Setup. If the Scheduled Maintenance counter has exceeded the limit, clean the machine promptly. If you do not, document jams and paper feed problems may occur. After cleaning the machine, reset the Scheduled Maintenance Counter using Remote Setup. See *Related Information*:*Clean the Scanner and Rollers*. (ADS-1350W) If your machine is connected via a network, we recommend using Web Based Management to check the information.
		The Pick Up Roller has been used more than 100,000 times. **The Separation Pad has been used more than 10,000 times.** Confirm the remaining life in the **Machine Info** dialog box using Remote Setup. If the Pick Up Roller or Separation Pad have exceeded their usage limit, replace them and then reset the Roller Counter using Remote Setup. See *Related Information*:*Reset the Usage Counters*. See *Related Information*:*Replace the Separation Pad*. See *Related Information*:*Replace the Pick Up Roller*. (ADS-1350W) If your machine is connected via a network, we recommend using Web Based Management to check the information.
		Clean the Sensors. See *Related Information*:*Clean the Sensors*.

For more information about errors, check your machine's status in Brother iPrint&Scan (for Windows and Mac).

When (USB LED) is on.

Error Indicator	Power Indicator	Machine Status
		Access Error (Scan to USB) • A USB flash drive is not inserted into the machine. Insert a USB flash drive. • The USB flash drive was removed while it was being accessed. Reinsert the USB flash drive.
		Unusable Device

Error Indicator	Power Indicator	Machine Status
		• An unsupported USB device is inserted in the USB port. Remove the device. • The USB flash drive is write-protected. Remove the write protection and try again.
		Too Many Files on USB (Scan to USB) Your machine cannot save to a USB flash drive if it contains too many files. Remove the USB flash drive, and then do one of the following: • Delete unused files or folders from the USB flash drive, and then try again. • Use a USB flash drive that has available space.

When (USB LED) is flashing.

Error Indicator	Power Indicator	Machine Status
		USB power is insufficient. • When using a USB Type-C cable, use a computer with a USB Type-C port supporting more than 15 W output or higher. • Use only a Certified USB Type-C cable.

Related Information

- Troubleshooting

Related Topics:

- Document Jam
- Clean the Scanner and Rollers
- Reset the Usage Counters
- Replace the Separation Pad
- Replace the Pick Up Roller
- Clean the Sensors

Document Jam

Documents can jam in the ADF unit if they are not inserted or fed correctly, if they are too long, or if multiple pages are fed at the same time (multifeed).

1. Remove any paper from the ADF that is not jammed.
2. Open the Front Cover (1).

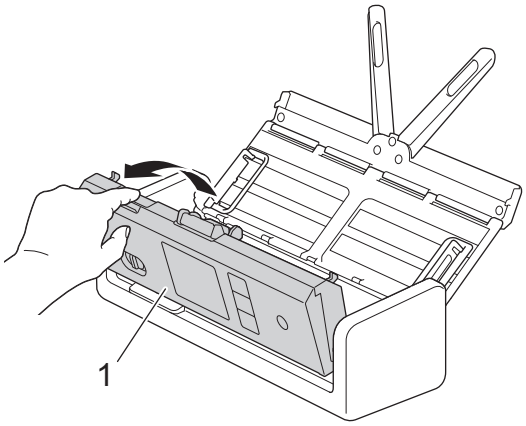

3. Gently pull the jammed document out of the machine.

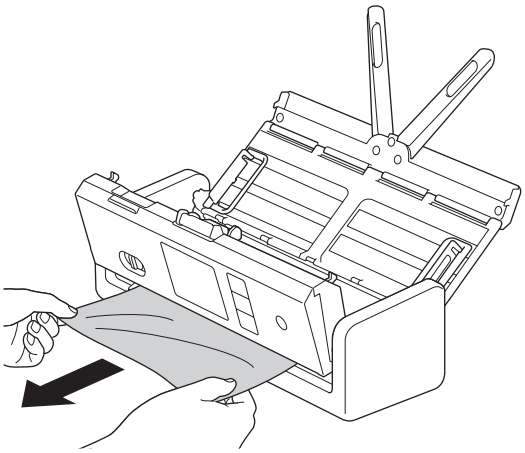

Check for ripped paper inside the machine. Remove any paper scraps you find inside the machine.

4. Close the Front Cover.

When clearing the multifeed, confirm that the data scanned before the multifeed was detected has been saved, and then start scanning again from the next page or the beginning of the document.

IMPORTANT

- To avoid damage to the jammed document, DO NOT pull the document out before opening the Front Cover.
- Take out any paper from the ADF before closing the Front Cover.
- To avoid future document jams, do the following:
  - Close the Front Cover correctly by pushing it gently in the centre.
  - Configure the settings for your document correctly.
  - Fan the paper to help prevent document jams and multi-feeding documents.
  - Clean the Separation Pad and Pick Up Roller. See *Related Information*: *Clean the Scanner and Rollers*.
  - Stagger the pages and then load your document.

- Make sure your document is acceptable for the machine.
- Load your document correctly.
- Make sure the maximum number of pages is appropriate for your document.
- When using long paper, to avoid a paper jam, you must select the **Long Paper** option from the **Document Size** menu.

Related Information

- Troubleshooting

Related Topics:

- Error and Maintenance LEDs
- Clean the Scanner and Rollers
- Acceptable Documents
- Load Documents

Card Jam

Cards can jam in the Card Slot if they are not inserted or fed correctly.

1. Open the Top Cover (1) and the Front Cover (2).

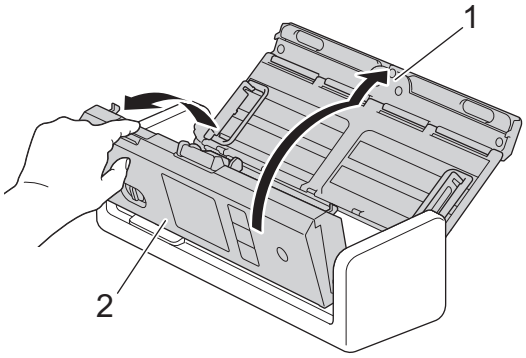

2. Remove the jammed card.

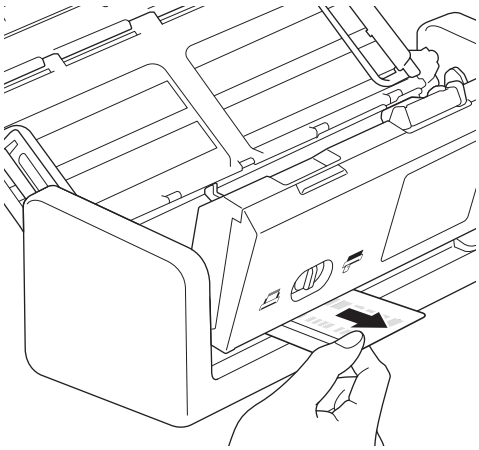

3. Close the Front Cover.

Related Information

- Troubleshooting

If You Are Having Difficulty with Your Machine

You can correct most problems yourself. If you think there is a problem with your machine, check the topics below. If you need additional help, visit support.brother.com/faqs for the latest **FAQs & Troubleshooting** tips.

Using non-Brother supplies may affect the scan quality, hardware performance, and machine reliability.

- Scanning and Other Problems
- AirPrint Scanning Problems
- Network Problems

Scanning and Other Problems

Scanning Difficulties

Difficulties	Cause	Suggestions
TWAIN or WIA errors appear when starting to scan. (Windows)	The TWAIN or WIA driver has not been selected as the primary source in your scanning application.	Make sure the Brother TWAIN or WIA driver is selected as the primary source in your scanning application. For example, in Nuance™ PaperPort™ 14SE, click **Scan Settings** > **Select**. Select the Brother TWAIN/WIA driver.
TWAIN errors appear when starting to scan. (Mac)	The TWAIN driver has not been selected as the primary source in your scanning application.	Make sure the Brother TWAIN driver is selected as the primary source in your application. (ADS-1300) You can also scan documents using the ICA Scanner Driver.
Vertical lines are seen in the scanned image.	Paper dust has accumulated on the surface of the glass strips.	Clean the glass strips inside the machine. See *Related Information*: *Clean the Scanner and Rollers*.
The scanned image is missing.	The Paper Guides are not adjusted to fit the width of the document.	Gently adjust the Paper Guides to fit the width of your document. When Scan Size is set to Auto and you are scanning a document that contains multiple page sizes, insert narrow pages straight and as close to the centre of the machine as possible. If the document does not feed straight, use the Continuous Scan option.
	The settings are not appropriate for your document. For example, a Letter/A4-sized document was fed when Executive/A5 was selected as the document size.	Make sure the document size settings are appropriate for your document. Configure the margin settings and adjust the scanning position.
	-	Configure the margin settings and adjust the scanning position.
The scanned image is skewed.	The Paper Guides are not adjusted to fit the width of the document.	Gently adjust the Paper Guides to fit the width of your document. When Scan Size is set to Auto and you are scanning a document that contains multiple page sizes, insert narrow pages straight and as close to the centre of the machine as possible. If the document does not feed straight, use the Continuous Scan option.
	The Long Paper setting is selected.	Select a setting other than Long Paper.
	• The plastic card is inserted on an angle. • The plastic card is not inserted according to the guidelines.	Insert the plastic card straight according to the guidelines.
	The document was curled.	Straighten the curled document and scan again.
	The embossed card was inserted in the Card Slot with the embossed side down.	Insert the embossed card, embossed side up, into the Card Slot.
	If you use a preset document size, the document skewing cannot be corrected automatically.	Select Auto for Document Size.
Scanning is too slow.	The resolution is not appropriate for your document.	Decrease the scanner resolution.

Difficulties	Cause	Suggestions
The document was not fed.	Paper dust has accumulated on the surface of the Pick Up Roller or Separation Pad.	Clean the Separation Pad and Pick Up Roller. See *Related Information*: *Clean the Scanner and Rollers*.
	Too many documents are loaded in the ADF at a time.	Make sure you do not exceed the ADF's capacity. See *Related Information*: *Acceptable Documents*.
	There are foreign objects in the ADF.	Remove any foreign objects or ripped paper from the ADF.
	Your media is too thin or too thick.	Make sure your media is acceptable for the machine. See *Related Information*: *Acceptable Documents*.
	Remote Setup is in progress.	Cancel Remote Setup.
	Paper ejection has paused.	Remove any paper from the ADF.
	Plastic Card Mode is selected in the Feed Selector.	Slide the Feed Selector to the ADF Mode side.
	A plastic card is inserted in the Card Slot.	Remove the plastic card.
	The document was curled.	Straighten the curled document and scan again.
	The Pick Up Roller cover film is folded or removed.	Contact your Brother dealer or Brother Customer Service to replace the Pick Up Roller Cover.
	The Separation Pad is not set correctly or the rubber part of the Separation Pad is folded.	Make sure the Separation Pad is set correctly.
	The leading edges of the document are aligned straight.	Fan the paper and position the pages so that the leading edges are aligned at a slight angle in the feed direction.
The document is jammed.	Paper dust has accumulated on the surface of the Pick Up Roller or Separation Pad.	Clean the Separation Pad and Pick Up Roller. See *Related Information*: *Clean the Scanner and Rollers*.
	There are foreign objects in the ADF.	Remove any foreign objects or ripped paper from the ADF.
	Your document is not acceptable for the machine.	Make sure your document is acceptable for the machine. See *Related Information*: *Acceptable Documents*.
	The document was curled.	Straighten the curled document and scan again.
	The Separation Pad is not set correctly or the rubber part of the Separation Pad is folded.	Make sure the Separation Pad is set correctly.
	Paper dust has accumulated on the sensors.	Clean the sensors. See *Related Information*:*Clean the Sensors*.
	The Pick Up Roller cover film is folded or removed.	Contact your Brother dealer or Brother Customer Service to replace the Pick Up Roller Cover.
	The leading edges of the document are aligned straight.	Fan the paper and position the pages so that the leading edges are aligned at a slight angle in the feed direction.
The scan quality is poor.	Paper dust has accumulated on the surface of the Pick Up Roller or Separation Pad.	Clean the Separation Pad and Pick Up Roller. See *Related Information*: *Clean the Scanner and Rollers*.
	Paper dust has accumulated on the surface of the glass strips inside the machine.	Clean the glass strips inside the machine. See *Related Information*: *Clean the Scanner and Rollers*.
	The scanner resolution is too low.	Increase the scanner resolution.

Difficulties	Cause	Suggestions
Bleedthrough is seen in the scanned data.	The settings are not appropriate for the type of document being scanned.	Select the Remove Bleed-through / Pattern / Remove Background Colour checkbox.
Colours in the scanned data are dark.	The settings are not appropriate for the type of document being scanned.	Do one of the following: • Select the Remove Bleed-through / Pattern / Remove Background Colour checkbox, and then scan from your computer. • Increase the Brightness, and then scan from your computer. • Increase the Contrast, and then scan from your computer. • Change the Colour Setting/Scan Type to Grey or Colour, and then scan from your computer.
A page that is not a blank page is skipped.	• The document is too faint. • Skip Blank Page is set to On.	Set Skip Blank Page to Off. Alternatively, reduce the Skip Blank Page sensitivity.
Cannot scan a long document.	Long Paper is not selected for the document size.	Select Long Paper for the document size. If you cannot select Long Paper, when scanning from the machine's Control Panel, set Skip Blank Page to Off, set 2-sided Scan to Off and set Colour Setting/ Scan Type to an option other than Auto. Then, you can select Long Paper for the document size.
A multifeed occurs.	The document is not loaded correctly.	Load your document correctly, and then try again.
	The document was curled.	Straighten the curled document and scan again.
	The Separation Pad is not set correctly or the rubber part of the Separation Pad is folded.	Make sure the Separation Pad is set correctly.
	The Pick Up Roller cover film is folded or removed.	Contact your Brother dealer or Brother Customer Service to replace the Pick Up Roller Cover.
	The leading edges of the document are aligned straight.	Fan the paper and position the pages so that the leading edges are aligned at a slight angle in the feed direction.
Cannot scan.	USB power is insufficient.	• When using a USB Type-C cable, use a computer with a USB Type-C port supporting more than 15 W output or higher. • Use only a Certified USB Type-C cable.
	Secure Function Lock is on. (ADS-1800W)	Contact your administrator to check your Secure Function Lock settings. See *Related Information*: *Use Secure Function Lock 3.0*.
	The **Pull Scan** option in the **Scan from PC** dialog box in Web Based Management is disabled. (ADS-1350W/ADS-1800W)	Enable the **Pull Scan** option.
Cannot scan to a computer from the machine.	• Scanning application (for example, Brother iPrint&Scan) is not installed on the computer. • The settings are not configured within the scanning application (for example, Brother iPrint&Scan). • The Scan Destination setting was not configured in Remote Setup or Web Based Management. (ADS-1300/ADS-1350W)	• Install a scanning application (for example, Brother iPrint&Scan). • Configure the settings using a scanning application (for example, Brother iPrint&Scan). • Configure the Scan Destination setting using Remote Setup or Web Based Management. (ADS-1300/ADS-1350W)

Difficulties	Cause	Suggestions
`Auto Start Scan` does not start. (ADS-1800W)	The settings for `Auto Start Scan` (Shortcut 21) are incorrect.	Confirm the settings for `Auto Start Scan` (Shortcut 21).
The plastic card is jammed.	The power came on when the plastic card was inserted in the machine.	Remove the plastic card. To prevent the card from getting jammed again, do not leave the card inserted in the machine.
	The embossed card was inserted in the Card Slot with the embossed side down.	Insert the embossed card, embossed side up, into the Card Slot.
	• The plastic card is inserted on an angle. • The plastic card is not inserted according to the guidelines.	Insert the plastic card straight according to the guidelines.
	Paper dust has accumulated on the sensors.	Clean the sensors. See *Related Information*:*Clean the Sensors*.
The plastic card was not fed.	A document was set on the ADF.	Remove the document from the ADF. See *Related Information*: *Card Jam*.
	ADF Mode is selected in the Feed Selector.	Slide the Feed Selector to the Plastic Card Mode side.
	The embossed card was inserted in the Card Slot with the embossed side down.	Insert the embossed card, embossed side up, into the Card Slot.
Cannot Scan to Workflow from the machine.	The Scan to Workflow settings are not configured within Brother iPrint&Scan (for Windows and Mac).	Configure the settings using Brother iPrint&Scan (for Windows and Mac). See *Related Information*: *Configure Scan to Workflow Settings Using Brother iPrint&Scan*.

Software Difficulties

Difficulties	Cause	Suggestions
Cannot save the settings in Remote Setup or Web Based Management.	The machine is processing.	Wait until the machine finishes processing, and then try again.
	The machine is being configured from the machine's Control Panel.	Stop configuring the machine from the Control Panel and use Remote Setup or Web Based Management instead.
Cannot start Remote Setup.	The machine is turned off.	Turn the machine on, and then try again.
	The machine is not connected to your computer.	Connect the machine to your computer, and then try again.
	An error is occurring.	Clear all errors, check the status is Ready on Remote Setup and then try again.
	The machine is scanning.	Wait until scanning has finished and try again.
	The machine is being configured from the machine's Control Panel.	Stop configuring the machine from the Control Panel.
	(ADS-1300/ADS-1350W) You pressed ⊗ on the machine before saving the Remote Setup settings. (ADS-1800W) You pressed ✕ on the machine before saving the Remote Setup settings.	Access Remote Setup again and save the settings.

Difficulties	Cause	Suggestions
	A USB flash drive is inserted into the machine.	Remove the USB flash drive.
Cannot enter the IP address and Subnet Mask. (ADS-1800W)	"000.000.000.000." has already been entered.	Press ⟨× to delete the entered information, and then enter the correct information.
The computer has detected a USB flash drive.	A USB flash drive is inserted into the machine and the computer is connected to the machine using a USB cable.	The computer detects the USB flash drive that is inserted into the machine. Remove the USB flash drive so that the computer does not detect it.
I want to prevent users from changing settings using Remote Setup. (ADS-1800W)	-	When you turn on the Secure Function Lock or Setting Lock, the users cannot use Remote Setup.

Other Difficulties

Difficulties	Cause	Suggestions
The machine will not scan.	A USB Type-C cable is connected to your computer via a USB hub.	Connect the machine directly to the computer using the USB Type-C cable. USB hubs are not supported.
The machine is in Sleep Mode (power save mode).	The machine is idle and the amount of time specified by the Sleep Mode setting has elapsed.	Do one of the following: • Press ⏻. • Press 🏠. (ADS-1800W) • Scan using your computer. • Open the Front Cover. • Load your document. • Touch the screen. (ADS-1800W) • Insert/disconnect the USB flash drive. • When using an AC Adapter, insert/disconnect the USB cable from the machine or computer.
The machine does not turn on.	The machine was plugged in within 60 seconds after being unplugged.	Wait 60 seconds, and then turn the scanner on.
The machine does not turn on. **-OR** ADS-1300/ADS-1350W: The machine displays the following error. Flashing ⏻ Off **-OR** ADS-1800W: The `Power shortage (Code:01)` message appears on the LCD.	When powering the machine using a USB Type-C cable, the USB Type-C cable is not correctly connected.	Securely connect the USB Type-C cable to your computer, turn the Brother machine off, and then turn it on again.
	The AC Adapter is not correctly connected to the electrical socket.	Securely connect the AC Adapter to the electrical socket, and turn the power off and on again.
	When powering the machine using a USB Type-C cable, a cable other than the included cable is being used.	• Use the USB Type-C cable that is included with the machine. • Purchase the optional AC Adapter (LK-1001C).
	When powering the machine using a USB Type-C cable, the power supply of your computer or USB port is insufficient. (Requires a supply of 15 W output or higher)	• Use a different USB Type-C port and make sure it is capable of supplying 15 W output or higher. • Purchase the optional AC Adapter (LK-1001C).

Difficulties	Cause	Suggestions
A USB Type-C cable cannot be connected to the power supply device (your computer or portable battery).	There is no USB Type-C port on the power supply device (your computer or portable battery).	Purchase the optional AC Adapter (LK-1001C).
Your computer cannot find the machine via USB interface.	The scanner driver is not installed.	Install the scanner driver.

Related Information

- If You Are Having Difficulty with Your Machine

Related Topics:

- Clean the Scanner and Rollers
- Use Secure Function Lock 3.0
- Acceptable Documents
- Configure Scan to Workflow Settings Using Brother iPrint&Scan
- Clean the Sensors
- Card Jam

AirPrint Scanning Problems

Related Models: ADS-1350W/ADS-1800W

Difficulty	Suggestions
My Brother machine is not displayed in the scanner list.	Make sure your Brother machine is turned on.
	Make sure your machine and your Mac are correctly connected to the same network.
I cannot scan.	Make sure your Brother machine is turned on.
	Make sure your machine and your Mac are correctly connected to the same network.
	Make sure the scan feature is enabled from **Network** > **Protocol** > **AirPrint Scanning** in Web Based Management.

Related Information

- If You Are Having Difficulty with Your Machine

Network Problems

Related Models: ADS-1350W/ADS-1800W

- If You Cannot Complete the Wireless Network Setup Configuration
- Your Scanner Cannot Be Detected on the Network During Installation
- Your Brother Machine Cannot Scan over the Network
- If You Want to Check that Your Network Devices are Working Correctly

If You Cannot Complete the Wireless Network Setup Configuration

Related Models: ADS-1350W/ADS-1800W

Turn your wireless router off and back on. If that does not resolve the problem, try to configure the wireless settings again. If this still does not resolve the problem, use the Actions listed in this table.

Cause	Action	Interface
Your security settings (SSID/ Network Key (Password)) are not correct.	Confirm your security settings. • The manufacturer's name or model number of the wireless access point/router may be used as the default security settings. • See the instructions supplied with your wireless access point/ router for information on how to find the security settings. • Ask the manufacturer of your wireless access point/router, your Internet provider, or your network administrator.	Wireless
Your Brother machine's MAC address is not allowed.	Confirm that the Brother machine's MAC Address is allowed in the filter. You can find the MAC address using the Brother machine's control panel.	Wireless
Your wireless access point/ router is in stealth mode (not broadcasting the SSID).	• Enter the correct Network Name (SSID) and Network Key (Password) manually. • Check the Network Name (SSID) and Network Key (Password) in the instructions supplied with your wireless access point/router and reconfigure the wireless network setup.	Wireless
Your security settings (SSID/ Password) are not correct.	• ADS-1350W Confirm the Network Name (SSID) and Network Key (Password). The SSID and Network Key are printed on the label attached to the scanner. • ADS-1800W Confirm the Network Name (SSID) and Network Key (Password). When you are configuring the network manually, the SSID and password are displayed on your Brother machine. If your mobile device supports the manual configuration, the SSID and password will be displayed on your mobile device's screen.	Wi-Fi Direct Wireless Direct
Your Brother machine is placed too far from your mobile device.	Move your Brother machine within about 1 metre of the mobile device when you configure the Wi-Fi Direct or Wireless Direct network settings.	Wi-Fi Direct Wireless Direct
There are some obstructions (walls or furniture, for example) between your machine and the mobile device.	Move your Brother machine to an obstruction-free area.	Wi-Fi Direct Wireless Direct
There is a wireless computer, Bluetooth®-supported device, microwave oven, or digital cordless phone near the Brother machine or the mobile device.	Move other devices away from the Brother machine or the mobile device.	Wi-Fi Direct Wireless Direct
If you have checked and tried all of the actions, but still cannot complete the Wi-Fi Direct or Wireless Direct configuration.	Turn your Brother machine off and back on. Then try to configure the Wi-Fi Direct or Wireless Direct settings again.	Wi-Fi Direct Wireless Direct

Cause	Action	Interface
Your machine is in Sleep Mode and cannot configure the network settings on Web Based Management. (ADS-1800W)	Turn off the Sleep Mode.	Wireless
The enterprise wireless network is not configured correctly.	Configure the settings in Web Based Management.	Wireless

Related Information

- Network Problems

Your Scanner Cannot Be Detected on the Network During Installation

Related Models: ADS-1350W/ADS-1800W

Cause	Action
Your computer is not connected to the network.	Make sure your computer is connected to a network, for example, a Wireless LAN environment or has Internet access. For further support, contact your network administrator.
Your machine is not connected to the network.	(Wireless network) • ADS-1350W If the Wi-Fi light on the Control Panel does not light up, the LEDs will indicate an error status. Make a note of the error status and then correct the error. See *Related Information*:*Error and Maintenance LEDs*. • ADS-1800W Press Settings > Network > WLAN(Wi-Fi) > WLAN Status > Status. If the LCD displays Connection Failed, ask your network administrator if your IP address is valid.
You use security software.	• In the installer dialog box, search for the Brother machine again. • Allow access when the alert message of the security software appears during the Brother Device installation. • The following port numbers are used for Brother network features: - Network scanning Port number 5566/Protocol TCP - Network scanning (Brother iPrint&Scan) Port number 54921/Protocol TCP • For more information about security software, see *Related Information*: *Your Brother Machine Cannot Scan over the Network*.
You use a Wi-Fi router.	The privacy separator on your Wi-Fi router may be enabled. Disable the privacy separator.
Your Brother machine is placed too far from the Wireless access point/router.	Place your Brother machine within about 1 metre of the Wireless access point/router when you configure the wireless network settings.
There are some obstructions (walls or furniture, for example) between your machine and the Wireless access point/router.	Move your Brother machine to an obstruction-free area, or closer to the Wireless access point/router.
There is a wireless computer, Bluetooth®-supported device, microwave oven, or digital cordless phone near the Brother machine or the Wireless access point/router.	Move all the devices away from the Brother machine or Wireless access point/router.

Related Information

- Network Problems

Related Topics:

- Your Brother Machine Cannot Scan over the Network
- If You Want to Check that Your Network Devices are Working Correctly
- Error and Maintenance LEDs

Your Brother Machine Cannot Scan over the Network

Related Models: ADS-1350W/ADS-1800W

Cause	Action
(Your Brother machine suddenly stopped scanning.)	• ADS-1350W Open the Front Cover, and then press and hold 3 and WPS simultaneously for five seconds to restart the wireless network. • ADS-1800W 1. Press > `Recover WLAN`. 2. When your wireless device connects successfully, the machine displays `Connected`. Press `OK`.
You did not select Accept in the security alert dialog box during the Brother Device installation, applications' start-up process, or when using the scanning features.	If you did not select Accept in the security alert dialog box, the firewall function of your security software may be denying access. Some security software may block access without showing a security alert dialog box. To allow access, see your security software instructions or ask the manufacturer.
Your security software blocks your machine's access to the network. (The Network scanning feature does not work.)	• Windows Configure the third-party Security/Firewall Software to allow Network scanning. To add port 54925 for Network scanning, type the information below: - in **Name**: Type any description, for example Brother NetScan. - in **Port number**: Type 54925. - in **Protocol**: UDP is selected. See the instruction manual that came with your third-party Security/Firewall Software or contact the software manufacturer. • Mac Reinstall the driver.
Your security software blocks your machine's access to the network.	The following port numbers are used for Brother network features: • Network scanning Port number 5566/Protocol TCP • Network scanning (Brother iPrint&Scan) Port number 54921/Protocol TCP For information about how to open the port, see the security software instructions or ask the manufacturer.
Your Brother machine was not assigned an available IP address.	Confirm the IP address and the Subnet Mask. Verify that both the IP addresses and Subnet Masks of your computer and the Brother machine are correct and located on the same network. For more information about how to verify the IP address and the Subnet Mask, ask your network administrator.
You cannot connect the Brother machine to the network using wireless capabilities.	• ADS-1350W If the Wi-Fi light on the Control Panel does not light up, the LEDs will indicate an error status. Make a note of the error status and then correct the error. See *Related Information*:*Error and Maintenance LEDs*. • ADS-1800W

Cause	Action
	Press Settings > Network > WLAN(Wi-Fi) > WLAN Status > Status. If the LCD displays Connection Failed, ask your network administrator if your IP address is valid.
Because the machine does not support Kerberos authentication, Network scanning cannot be used.	Change the server settings or change the destination folder where your document will be stored in the Scan to Network Profile from Web Based Management.

If you have checked and tried all of the actions, but your machine still cannot scan, uninstall the Brother software and drivers and reinstall them.

Related Information

- Network Problems

Related Topics:

- Your Scanner Cannot Be Detected on the Network During Installation
- If You Want to Check that Your Network Devices are Working Correctly
- Error and Maintenance LEDs

If You Want to Check that Your Network Devices are Working Correctly

Related Models: ADS-1350W/ADS-1800W

Check	Action
Check that your Brother machine, access point/router, or network hub is turned on.	**Check the following:** • The power cord is connected correctly and the Brother machine is turned on. • The access point/router or hub is turned on and its link indicator is flashing. • All protective packaging has been removed from the machine. • The Front Cover, Separation Pad Cover and Pick-up Roller Cover are completely closed.
Check your Brother machine's network settings, such as IP address, or the link status.	• For Web Based Management (supported models only) Start Web Based Management and access your Brother machine. When the Web Based Management screen appears, click **Network** > **Network** > **Network Status**. • For your machine's LCD (supported models only) (Wireless network) - ADS-1350W If the Wi-Fi light on the Control Panel does not light up, the LEDs will indicate an error status. Make a note of the error status and then correct the error. See *Related Information*:*Error and Maintenance LEDs*. - ADS-1800W Press `Settings` > `Network` > `WLAN(Wi-Fi)` > `WLAN Status` > `Status`. If the LCD displays `Connection Failed`, ask your network administrator if your IP address is valid.
Check that you can "ping" the Brother machine from your computer.	Ping the Brother machine from your computer using the IP address or the node name in the Windows command prompt or Mac Terminal application: ping `<ipaddress>` or `<nodename>`. • Successful: Your Brother machine is working correctly and connected to the same network as your computer. • Unsuccessful: Your Brother machine is not connected to the same network as your computer. • Confirm that the IP address and the Subnet Mask are set correctly.

If you have checked and tried all of the actions but you are still having problems, see the instructions supplied with your wireless access point/router to find the SSID and the Network Key (Password) information and set them correctly.

Related Information

- Network Problems

Related Topics:

- Your Brother Machine Cannot Scan over the Network
- Your Scanner Cannot Be Detected on the Network During Installation
- Error and Maintenance LEDs

Check the Serial Number

>> ADS-1300/ADS-1350W
>> ADS-1800W

ADS-1300/ADS-1350W

1. Do one of the following:
   - Windows

     Launch (**Brother Utilities**), and then click the drop-down list and select your model name (if not already selected). Click **Tools** in the left navigation bar, and then click **Remote Setup**.
   - Mac

     In the **Finder** menu bar, click **Go** > **Applications** > **Brother**, select your model name, and then double-click the **Brother Remote Setup** icon.
     If the **Search Devices** dialog box appears, select your model name and then click **Connect**.

If your machine is connected via a network, we recommend using Web Based Management to check the information.

2. Click the **Machine Info** menu in the left navigation pane.

   The window displays the **Serial Number**.

ADS-1800W

Press [Settings] > [Machine Info.] > [Serial No.].

The LCD displays [Serial No.].

Related Information

- Troubleshooting

Related Topics:

- Access Web Based Management

Reset Your Brother Machine

Select from the following reset functions:

- **Machine Reset** (ADS-1350W/ADS-1800W)
  Reset all machine settings that you have changed.
  Network settings are not affected by this reset.
- **Network Reset** (ADS-1350W/ADS-1800W)
  Reset the network settings to the default factory settings (includes IP Address information).
- **Address Book Reset** (ADS-1800W)
  Reset the Address Book to delete all existing contact information.
- **All Settings Reset**
  Reset all the machine settings to the original factory defaults.
  We strongly recommend performing this operation when you dispose of the machine.

>> ADS-1300/ADS-1350W
>> ADS-1800W

ADS-1300/ADS-1350W

1. Do one of the following:
   - Windows
     Launch (**Brother Utilities**), and then click the drop-down list and select your model name (if not already selected). Click **Tools** in the left navigation bar, and then click **Remote Setup**.
   - Mac
     In the **Finder** menu bar, click **Go** > **Applications** > **Brother**, select your model name, and then double-click the **Brother Remote Setup** icon.
     If the **Search Devices** dialog box appears, select your model name and then click **Connect**.

(ADS-1350W) If your machine is connected via a network, we recommend using Web Based Management to configure the scan settings.

2. Click the **Machine Info** menu in the left navigation pane.
3. Click the **Reset** button for the settings you want to reset.
4. Click **OK** to close the Remote Setup window.

ADS-1800W

1. Press [Settings] > [Initial Setup] > [Reset].
2. Press the reset option you want to use.
3. Press [OK] for two seconds to restart the machine.

Related Information

- Troubleshooting

Related Topics:

- Reset the Network Settings to Factory Default

Reset the Usage Counters

After replacing any machine parts, reset the usage counter so that you can start counting from 0.

>> ADS-1300/ADS-1350W
>> ADS-1800W

ADS-1300/ADS-1350W

1. Do one of the following:
   - Windows

     Launch (**Brother Utilities**), and then click the drop-down list and select your model name (if not already selected). Click **Tools** in the left navigation bar, and then click **Remote Setup**.
   - Mac

     In the **Finder** menu bar, click **Go** > **Applications** > **Brother**, select your model name, and then double-click the **Brother Remote Setup** icon.
     If the **Search Devices** dialog box appears, select your model name and then click **Connect**.

(ADS-1350W) If your machine is connected via a network, we recommend using Web Based Management to configure the scan settings.

2. In the left navigation pane, click the **Machine Info** menu.
3. In the **Remaining Life** section, click the **Reset** button in the **Pickup Roller** or **Separation Pad** option.
4. Click **OK** to close the Remote Setup window.

ADS-1800W

1. Press [Settings] > [Machine Info.] > [Usage Counters].
2. To reset the Roller Counter, press [Pickup Roller Count].
3. To reset the Separation Pad Counter, press [Separation Pad Count].
4. When the touchscreen displays a confirmation message, press [Yes].
5. Press .

Related Information

- Troubleshooting

Related Topics:

- Error and Maintenance LEDs

Routine Maintenance

- Clean Your Brother Machine
- Replace Supplies
- Pack and Ship Your Brother Machine

Clean Your Brother Machine

- Clean the Outside of the Machine
- Clean the Scanner and Rollers
- Clean the Sensors

Clean the Outside of the Machine

1. Turn off the machine and unplug it from the computer or AC Adapter.
2. Wipe the Top Cover and the Control Panel with a dry, soft, lint-free cloth to remove dust.

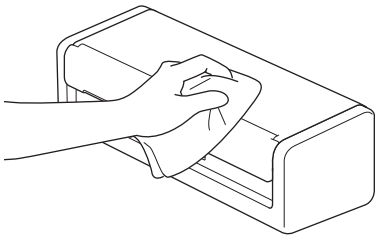

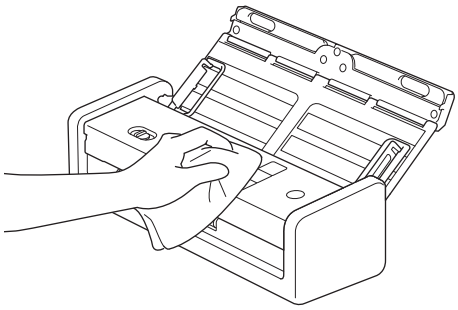

Related Information

- Clean Your Brother Machine

Clean the Scanner and Rollers

A spot of dirt or correction fluid on the glass strip may cause poor quality scans. Clean the scanner and rollers if a vertical line appears in the scanned data or if areas are missing in the scanned data.

1. Turn off the machine and unplug it from the computer or AC Adapter.
2. Open the Top Cover (1) and the Front Cover (2).

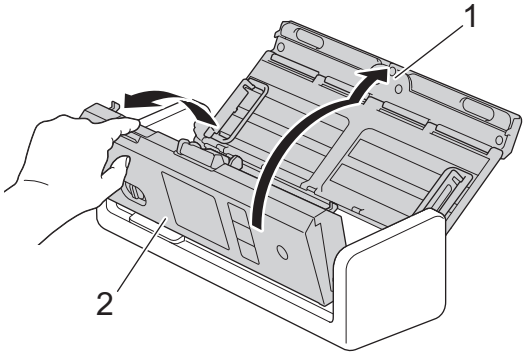

3. In the document feeder unit, clean the glass strips (1) (2) with a soft lint-free cloth moistened with water.

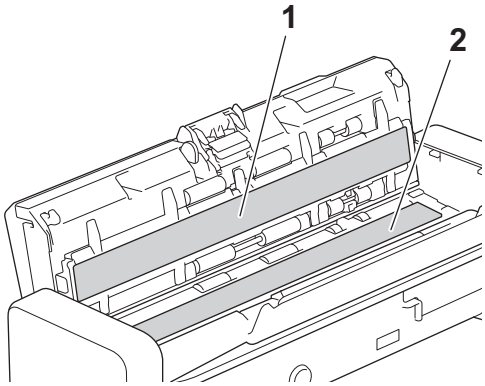

IMPORTANT

Be careful when touching the Separation Pad and its surrounding area in the machine. Otherwise, you could cause serious damage to the machine.

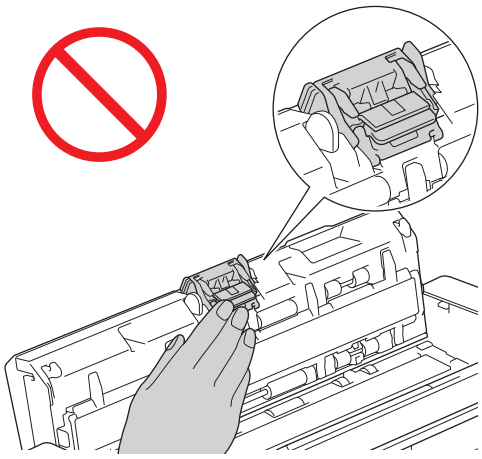

4. Pinch the Pick Up Roller Cover (1) and then pull the cover up and remove.

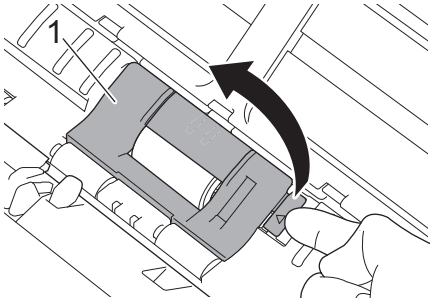

5. Slide the Pick Up Roller(1) to the right edge.

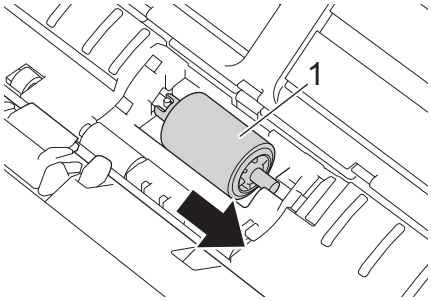

6. Pinch and pull the Pick Up Roller out of the machine.

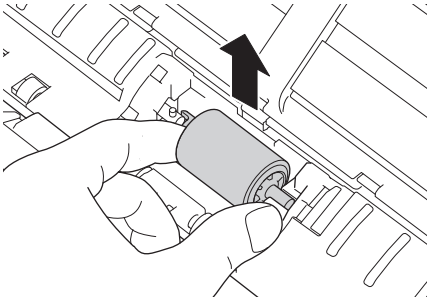

7. Clean the Pick Up Roller with a soft, lint-free cloth slightly moistened with water.
8. Place the Pick Up Roller into the machine.

Confirm the left and right sides of the Pick Up Roller before attaching it.

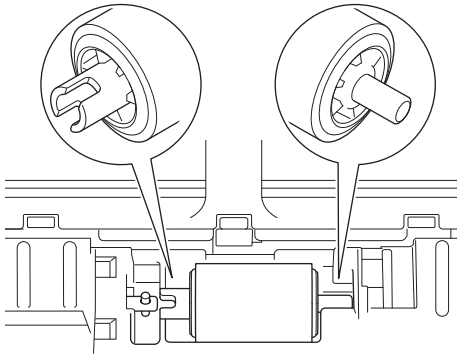

9. Slide the Pick Up Roller(1) to the left edge while turning the Pick Up Roller.

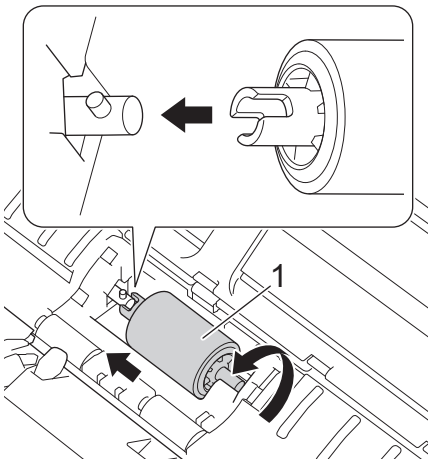

10. Close the Pick Up Roller Cover.
11. Close the Front Cover and the Top Cover.

(ADS-1800W)

When `[Scheduled Maintenance Alert]` appears on the machine's LCD, you must clean the machine promptly. If you do not, document jams and paper feed problems may occur.

First, run your fingertip over the glass to see if you feel anything (dirt or debris). Clean the glass strips with a lint-free cloth. You may have to repeat the cleaning process three or four times. To test, scan a document after each cleaning attempt.

When there is a spot of dirt or correction fluid on the glass strip, the scanned sample shows a vertical line.

After the glass strip is cleaned, the vertical line is gone.

Related Information

- Clean Your Brother Machine

Related Topics:

- Error and Maintenance LEDs
- Document Jam
- Scanning and Other Problems

Clean the Sensors

1. Turn off the machine and unplug it from the computer or AC Adapter.
2. Open the Top Cover (1) and the Front Cover (2).

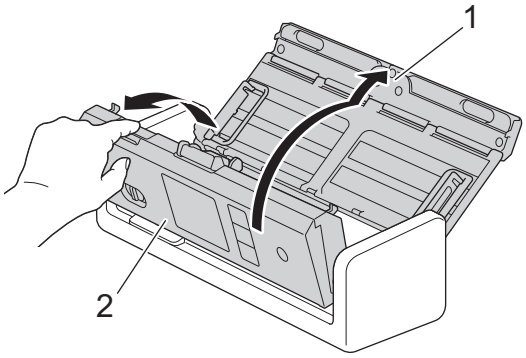

3. Wipe off the paper dust accumulated on the Document Scanning Position Sensor (1) with a soft lint-free cloth moistened with water.

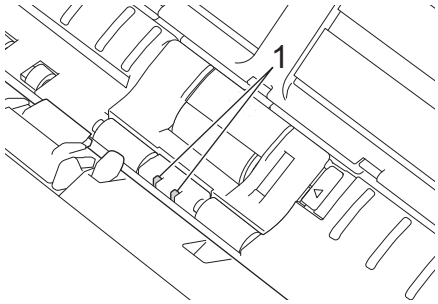

4. Wipe off the paper dust accumulated on the Card Sensor (1) with a soft lint-free cloth moistened with water.

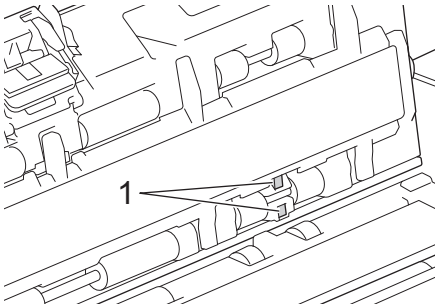

5. Close the Front Cover and the Top Cover.

Related Information

- Clean Your Brother Machine

Related Topics:

- Error and Maintenance LEDs

Replace Supplies

- Replacement Supplies and Optional Accessories
- Check Replacement Cycles for Your Supplies
- Replace the Pick Up Roller
- Replace the Separation Pad
- Install or Remove the Output Tray

Replacement Supplies and Optional Accessories

Part Name	Part No.	Standard Replacement Cycle
Separation Pad 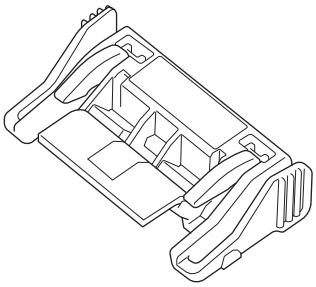	SP-2001C	10,000 sheets
Pick Up Roller 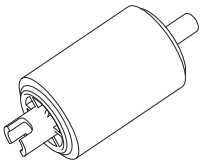	PUR-2001C	100,000 sheets
Carrier Sheet (x2) 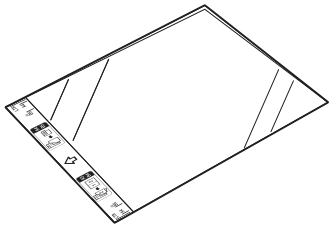	CS-A3301	500 times
Output Tray 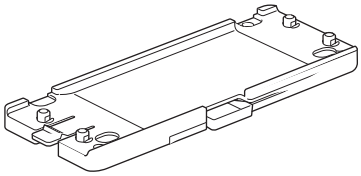	OT-1001C	-
AC Adapter 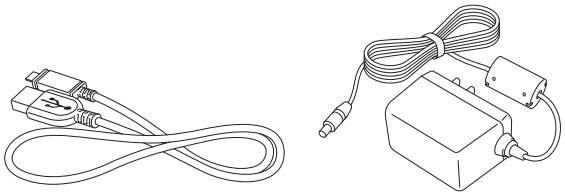 (SA-AD-001)	LK-1001C	-

Related Information

- Replace Supplies

Check Replacement Cycles for Your Supplies

Check machine parts regularly to maintain scan quality.

>> ADS-1300/ADS-1350W
>> ADS-1800W

ADS-1300/ADS-1350W

1. Do one of the following:
   - Windows

     Launch (**Brother Utilities**), and then click the drop-down list and select your model name (if not already selected). Click **Tools** in the left navigation bar, and then click **Remote Setup**.
   - Mac

     In the **Finder** menu bar, click **Go** > **Applications** > **Brother**, select your model name, and then double-click the **Brother Remote Setup** icon.
     If the **Search Devices** dialog box appears, select your model name and then click **Connect**.

If your machine is connected via a network, we recommend using Web Based Management to check the information.

2. Click **Machine Info** in the left navigation pane to check the remaining life of the Pick Up Roller and the Separation Pad.

If the LED patterns indicate that it is time to replace the Pick Up Roller or Separation Pad, we recommend ordering the necessary parts from Brother website or local Brother dealer.

ADS-1800W

Press [Settings] > [Machine Info.] > [Usage Counters].

The LCD displays [Pickup Roller Count] and [Separation Pad Count].

If the LCD indicates that it is time to replace the Pick Up Roller or Separation Pad, we recommend ordering the necessary parts from Brother website or local Brother dealer.

Related Information

- Replace Supplies

Related Topics:

- Access Web Based Management
- Error and Maintenance Messages
- Error and Maintenance LEDs

Replace the Pick Up Roller

Your machine is equipped with a scan counter that automatically counts how many times the machine has scanned. After approximately 100,000 scans, you may have to replace the Pick Up Roller.

1. Open the Top Cover (1) and the Front Cover (2).

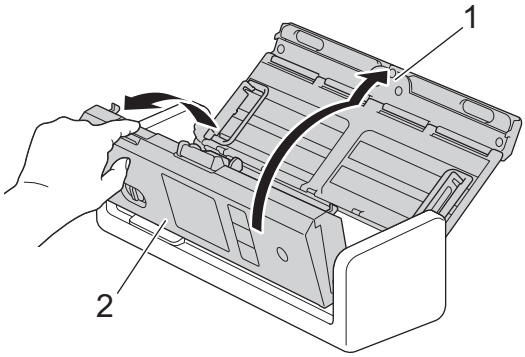

2. Pinch the Pick Up Roller Cover (1) and then pull the cover up and remove.

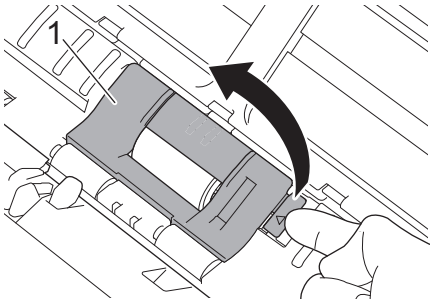

3. Slide the Pick Up Roller(1) to the right edge.

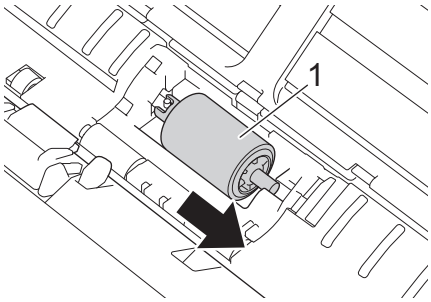

4. Pinch and pull the Pick Up Roller out of the machine.

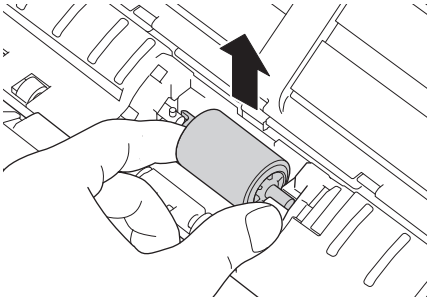

5. Place a new Pick Up Roller into the machine.

Confirm the left and right sides of the Pick Up Roller before attaching it.

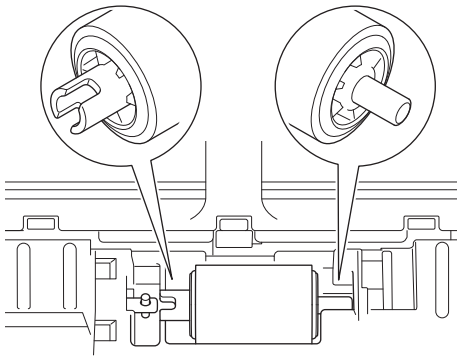

6. Slide the Pick Up Roller(1) to the left edge while turning the Pick Up Roller.

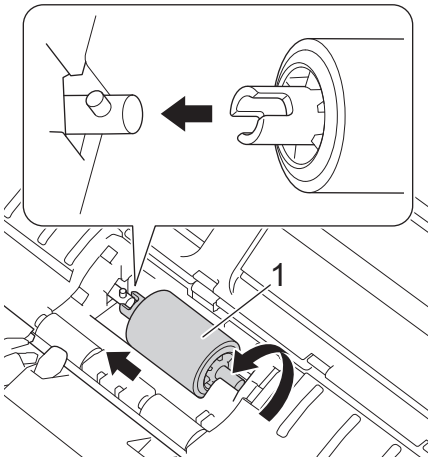

7. Close the Pick Up Roller Cover.
8. Close the Front Cover.
9. Reset the Pick Up Roller Counter. See *Related Information*:*Reset the Usage Counters*.

Confirm the following:
The Pick Up Roller Count value is 0.

Related Information

- Replace Supplies

Related Topics:

- Error and Maintenance LEDs
- Reset the Usage Counters

Replace the Separation Pad

Your machine is equipped with a scan counter that automatically counts how many times the machine has scanned. After approximately 10,000 scans, you may have to replace the Separation Pad.

1. Open the Top Cover (1) and the Front Cover (2).

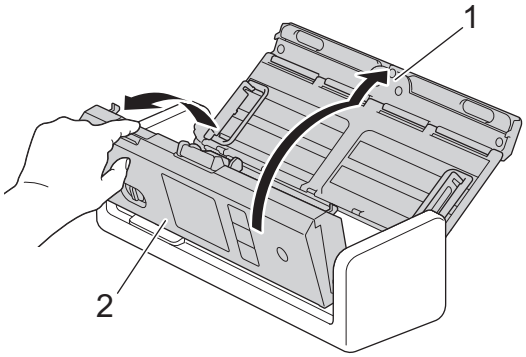

2. Pinch and pull the Separation Pad upwards.

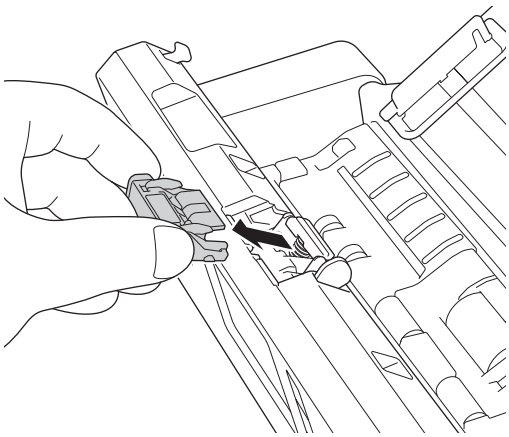

IMPORTANT

Be careful when touching the Separation Pad and its surrounding area in the machine. Otherwise, you could cause serious damage to the machine.

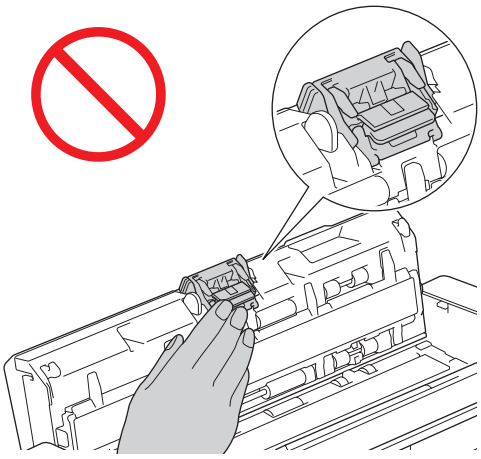

3. Attach a new Separation Pad.

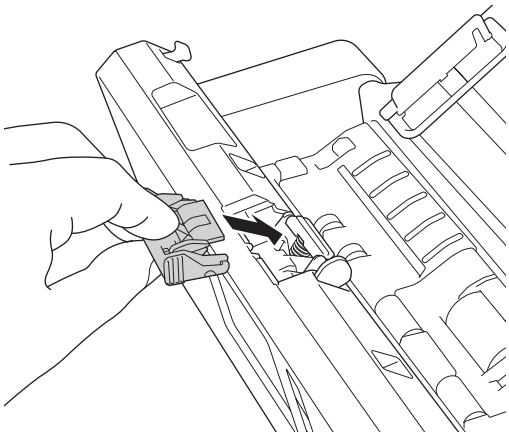

4. Close the Front Cover and the Top Cover.
5. Reset the Separation Pad Counter. See *Related Information*: Reset the Usage Counters.

Confirm the following:
The Separation Pad Count value is 0.

Related Information

- Replace Supplies

Related Topics:

- Error and Maintenance LEDs
- Reset the Usage Counters

Install or Remove the Output Tray

The Output Tray is an optional accessory.

>> Install the Output Tray
>> Remove the Output Tray

Install the Output Tray

1. Align the holes on the bottom of the machine with the docking pins on the Output Tray and push them together as shown.

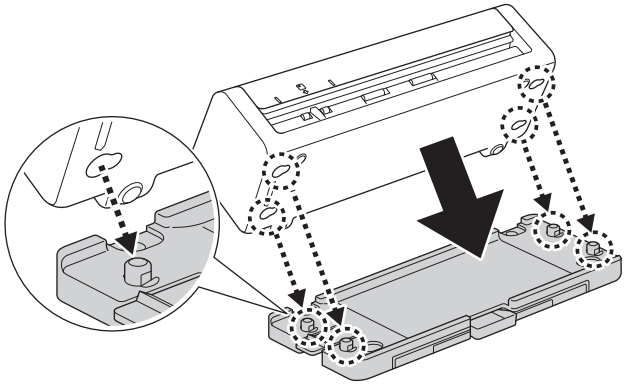

2. Slide the machine to the left to secure it.

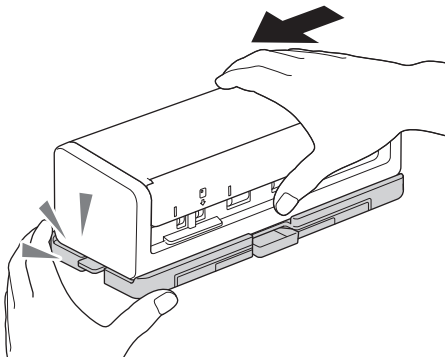

3. Open the Top Cover (1), and then lift the Document Support Arms (2).

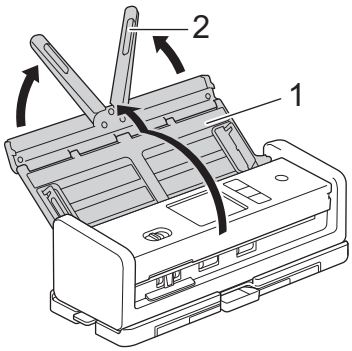

4. Extend the Output Tray (1) to match the length of the document pages.

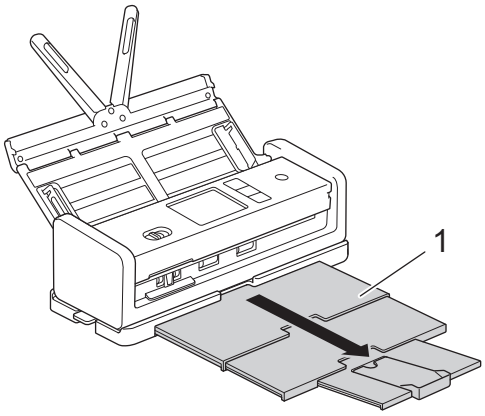

5. Unfold the Document Stopper (1).

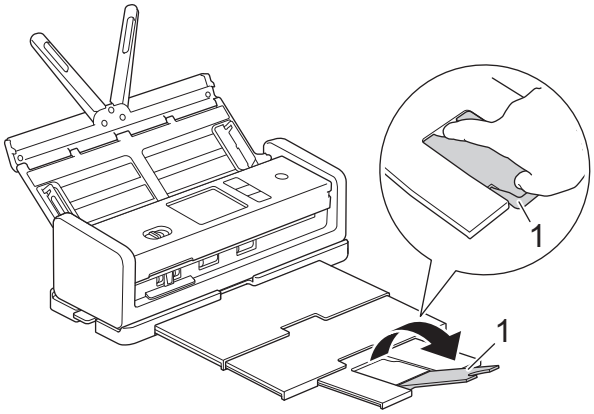

⚠ CAUTION

DO NOT carry the machine by the Output Tray.

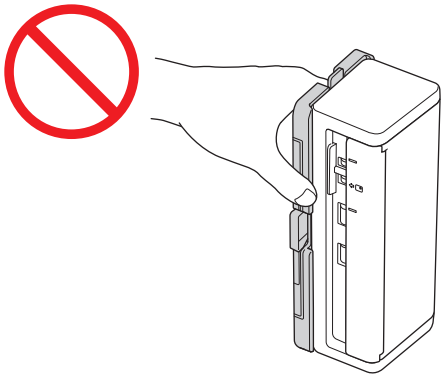

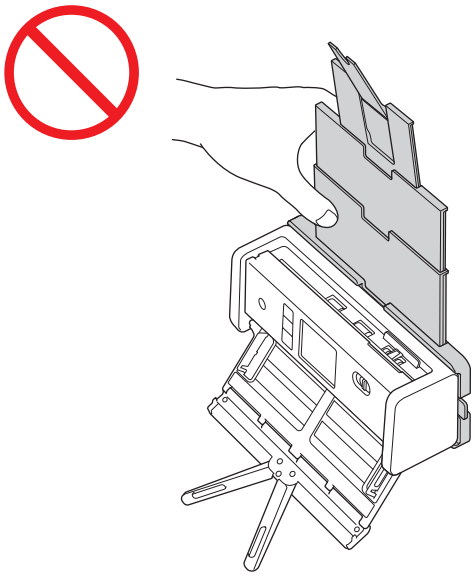

Remove the Output Tray

1. Close the Document Stopper (1) and collapse the Output Tray (2).

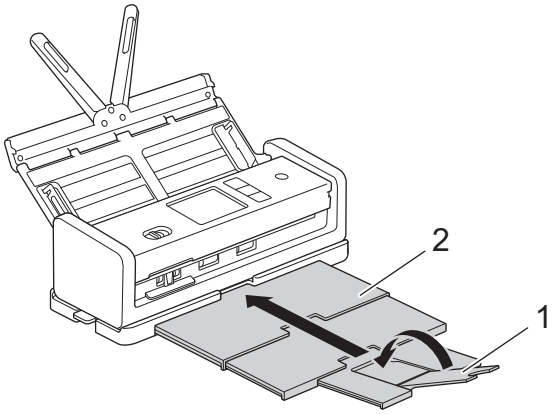

2. Gently fold the Document Support Arms (1), and then close the Top Cover (2).

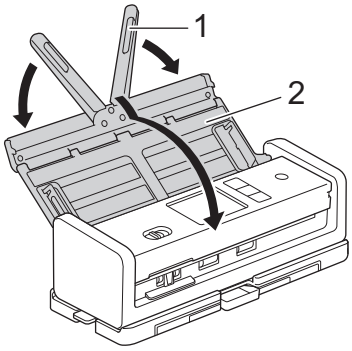

3. While pressing the switch on the left side down, slide the machine to the right.

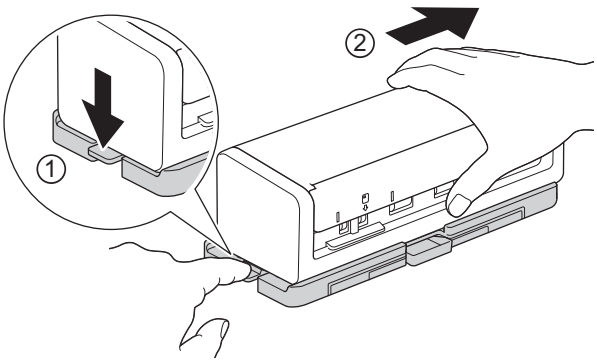

4. Lift up the main unit to remove it.

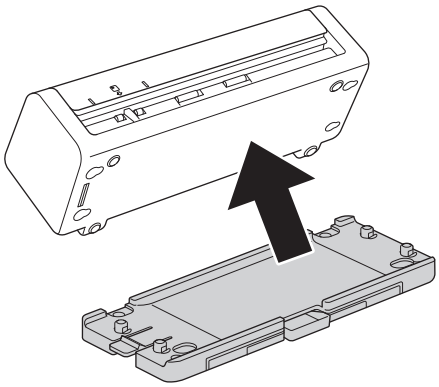

Related Information

- Replace Supplies

Pack and Ship Your Brother Machine

When you transport the machine, use the packing materials that came with your machine. If you do not pack the machine correctly, any damage that may occur in transit may not be covered by your warranty.

The machine should be adequately insured with the carrier.

1. Gently fold the Document Support Arms (1), and then close the Top Cover (2).

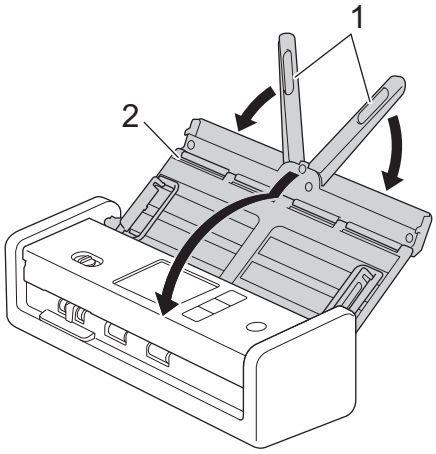

2. Wrap the machine in the original bag.

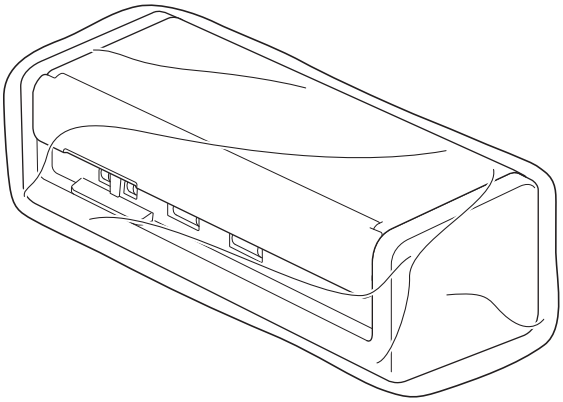

3. Pack the machine and the printed materials in the original carton with the original packing material as shown.

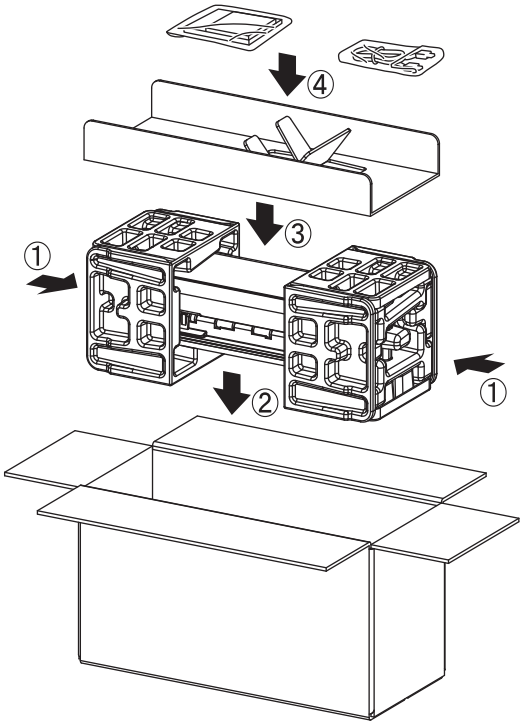

4. Close the carton and tape it shut.

Related Information

- Routine Maintenance

Machine Settings

- Check Your Machine's Password
- Change Machine Settings from the Control Panel
- Change Machine Settings from Your Computer

Check Your Machine's Password

Related Models: ADS-1350W/ADS-1800W

If prompted to enter a password, check the following information:

>> Find the Default Password
>> Change the Password
>> Reset the Password

Find the Default Password

The default password to manage this machine's settings is located on the bottom of the machine and marked "**Pwd**".

Change the Password

We recommend immediately changing the default password to protect your machine from unauthorised access.

Use Web Based Management to change the password.
For more information, see *Related Information*.

Reset the Password

If you forget your password, reset your machine to its factory default settings. The password will also be reset to the default password.

For more information, see *Related Information*.

Related Information

- Machine Settings

Related Topics:

- Change the Login Password Using Web Based Management
- Reset Your Brother Machine

Change Machine Settings from the Control Panel

Related Models: ADS-1800W

- In the Event of Power Failure (Memory Storage)
- Change the General Settings from the Control Panel
- Save Your Favourite Settings as a Shortcut

In the Event of Power Failure (Memory Storage)

Related Models: ADS-1800W

- Your menu settings are stored permanently and, in the event of a power failure, will not be lost.
- Temporary settings will be lost.
- During a power failure, the machine will keep the date and time for approximately 24 hours.

Related Information

- Change Machine Settings from the Control Panel

Change the General Settings from the Control Panel

Related Models: ADS-1800W

Purpose	Operation	Description
Adjust the LCD Backlight Brightness	Settings > General Setup > LCD Settings > Backlight	Adjust the brightness of the LCD backlight.
Change How Long the LCD Backlight Stays On	Settings > General Setup > LCD Settings > Dim Timer	Set how long the LCD backlight stays on.
Set the Home Screen	Settings > General Setup > Screen Settings > Home Screen	Set the Home screen to Scan 1-4, Shortcut 1-5, or Auto Start Scan. When the machine is idle or you press , the LCD will return to the screen you have set.
Set Sleep Mode Countdown	Settings > General Setup > Ecology > Sleep Time	Set how long the machine must be idle before it goes into Sleep Mode (5-90 minutes). The Sleep Mode setting can reduce power consumption. When the machine is in Sleep Mode, it acts as though it is turned off. The timer will restart if any operation is carried out on the machine. The machine will not enter Sleep Mode in the following situations: • A USB flash drive is inserted into the machine. • A machine error has occurred.
Set the Machine to Power Off Automatically	Settings > General Setup > Ecology > Auto Power Off	Select how long the machine must wait before it automatically turns itself off after entering Sleep Mode. The Auto Power Off feature can save power consumption. When this feature is set to Off, you must power off the machine manually. To turn the machine on after the Auto Power Off feature has turned it Off, press . The timer will restart if you press any buttons or touchscreen. Auto Power Off will be activated when all of these conditions are met: • Auto Power Off setting is not set to Off. • The machine has been in Sleep Mode for more than the preset period.

Purpose	Operation	Description
Display scan results	Settings > General Setup > Notice Settings > Scan Result(Skip Blank Page)	Set the LCD to display how many pages are scanned and how many are skipped.
Turn the Auto Start Scan Mode On	Settings > General Setup > Auto Start Scan Mode	Scanning starts automatically using the settings saved as the auto scan shortcut (Shortcut 21) when you place a document in the ADF. It is not necessary to press the Scan Button.
Turn the wireless network connection On	Settings > Network > WLAN(Wi-Fi) > WLAN(Wi-Fi) Enable	Turn the wireless network connection On or Off.
Set the Date and Time	Settings > Initial Setup > Date and Time	Set the date and time. If you set Auto Daylight to On, the time will be adjusted forward one hour in the spring and adjusted backward one hour in the autumn.
Change for Daylight Saving Time Automatically	Settings > Initial Setup > Date and Time > Auto Daylight	Set the machine to change automatically for Daylight Saving Time. It will reset itself forward one hour in the spring and backward one hour in the autumn. Make sure you have set the correct date and time in the Date and Time setting. This feature is available only in some countries.
Change the Language Displayed on the LCD	Settings > Initial Setup > Local Language	Change your LCD language.

Related Information

- Change Machine Settings from the Control Panel

Save Your Favourite Settings as a Shortcut

Related Models: ADS-1800W

- Add Shortcuts
- Change or Delete Shortcuts
- Assign a Shortcut to an IC Card

Add Shortcuts

Related Models: ADS-1800W

Use the Shortcuts feature to create shortcuts for frequently used operations, such as Scan to USB, Scan to Email Server, Scan to Network, and Scan to FTP/SFTP.

These instructions describe how to add a Scan to USB Shortcut. The steps for adding other 'Scan to' shortcuts are the same.

Before you add a shortcut for Scan to FTP/SFTP, Scan to Network, or Scan to SharePoint, make sure your network administrator adds your profile name and permissions in Web Based Management.

1. Press + ([Shortcuts]).
2. Press ◀ or ▶ to display the Shortcut screens.
3. Press + to add a new shortcut.
4. Press ▲ or ▼ to display [to USB].
5. Press [to USB].
6. Press [Options].
7. Press ▲ or ▼ to display the available options for the setting, and then press the option you want.

   If necessary, repeat these steps to add additional options, and then press [OK].
8. Press [Save as Shortcut].
9. Press [OK].
10. Enter a name for the shortcut. Press [OK].

    If you want to make this a One Touch Shortcut, follow the LCD instructions.
11. Press [OK].

Related Information

- Save Your Favourite Settings as a Shortcut

Change or Delete Shortcuts

Related Models: ADS-1800W

1. Press [Settings] > [Shortcut Settings], and select the Shortcut you want to change.
2. Press [Edit].

- To delete the Shortcut, press [Delete] and follow the LCD.
- To edit the name of the Shortcut, press [Rename] and follow the LCD.

3. Press [Options].
4. Select the settings you want to change for the Shortcut, and then press [OK].
5. Press [Save as Shortcut].
6. Press [OK] to confirm.

You will be asked if you want to make this a One Touch Shortcut. Follow the LCD instructions.

7. Press [OK].

Related Information

- Save Your Favourite Settings as a Shortcut

Assign a Shortcut to an IC Card

Related Models: ADS-1800W

- Assign a Shortcut to an IC Card with IC Card Reader

Assign a Shortcut to an IC Card with IC Card Reader

Related Models: ADS-1800W

You can assign one Shortcut to your IC card. When you touch your IC card to the IC card reader connected to your machine, your personal Shortcut automatically appears on the touchscreen.

- You cannot use the same IC card for different Shortcuts.
- To use the IC card for another Shortcut, unregister the card first, and then register it with the new Shortcut.
- You cannot assign the Scan to USB function as a shortcut to your IC card.

Before you assign a shortcut to an IC card, register an external IC card reader. Use Web Based Management to register the card reader. Your machine supports external IC card readers that use HID-class drivers.

1. Start your web browser.
2. Type "https://machine's IP address" in your browser's address bar (where "machine's IP address" is the machine's IP address).

   For example:

   https://192.168.1.2
3. If required, type the password in the **Login** field, and then click **Login**.

   The default password to manage this machine's settings is located on the bottom of the machine and marked "**Pwd**". Change the default password by following the on-screen instructions when you first log in.
4. In the left navigation bar, click **Administrator** > **External Card Reader**.

   If the left navigation bar is not visible, start navigating from ≡.
5. Enter the necessary information, and then click **Submit**.
6. Connect the card reader to your machine.

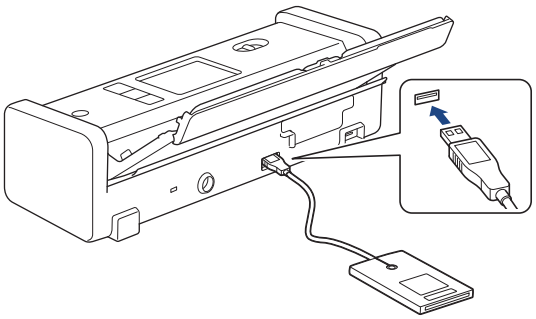

7. If the Home screen appears, press the tab that contains the Shortcut you want to assign to your IC card.
8. Press and hold the Shortcut until the options appear.
9. Press ▲ or ▼ to display the `[Register Card/NFC]` option, and then press it.
10. Touch the IC card to the IC card reader connected to your machine.
11. Press `[Register]`.

    The Shortcut is assigned to the IC card.

Related Information

- Assign a Shortcut to an IC Card

Related Topics:

- Access Web Based Management

Change Machine Settings from Your Computer

- Change Machine Settings Using Web Based Management
- Change the Machine Settings Using Remote Setup

Change Machine Settings Using Web Based Management

Related Models: ADS-1350W/ADS-1800W

Web Based Management is a utility that uses a standard web browser to manage your machine using the Hyper Text Transfer Protocol (HTTP) or Hyper Text Transfer Protocol over Secure Socket Layer (HTTPS).

- What is Web Based Management?
- Access Web Based Management
- Change the Login Password Using Web Based Management

What is Web Based Management?

Related Models: ADS-1350W/ADS-1800W

Web Based Management is a utility that uses a standard web browser to manage your machine using the Hyper Text Transfer Protocol (HTTP) or Hyper Text Transfer Protocol over Secure Socket Layer (HTTPS).

- We recommend using the latest version of the following web browsers:
  - Microsoft Edge, Firefox, and Google Chrome™ for Windows
  - Safari, Firefox, and Google Chrome™ for Mac
  - Google Chrome™ for Android™
  - Safari and Google Chrome™ for iOS
- Ensure that JavaScript and Cookies are always enabled, regardless of which browser you use.
- Make sure your machine is On and connected to the same network as your computer, and that your network supports the TCP/IP protocol.

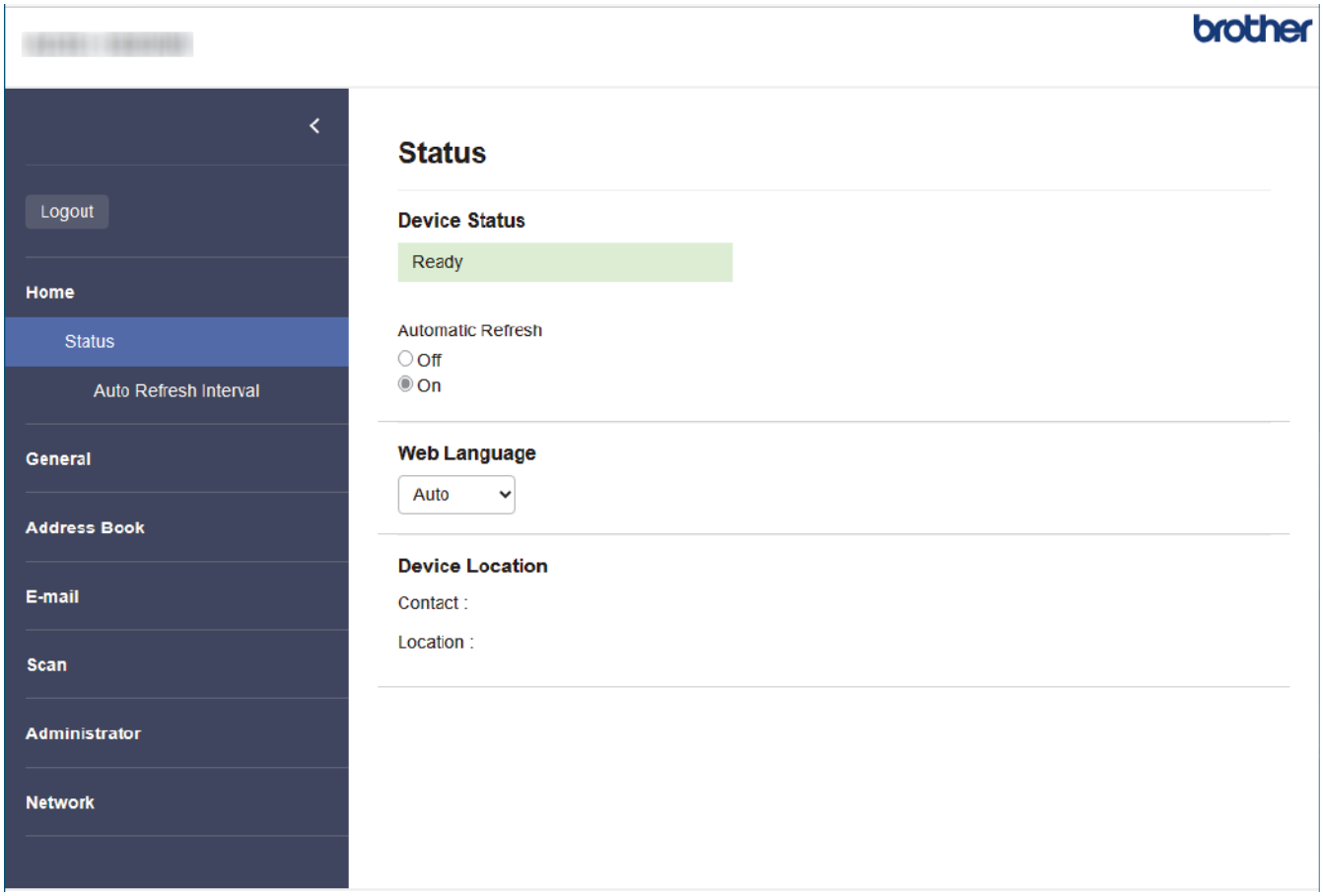

The actual screen may differ from the screen shown above.

Related Information

- Change Machine Settings Using Web Based Management

Access Web Based Management

Related Models: ADS-1350W/ADS-1800W

- We recommend using the latest version of the following web browsers:
  - Microsoft Edge, Firefox, and Google Chrome™ for Windows
  - Safari, Firefox, and Google Chrome™ for Mac
  - Google Chrome™ for Android™
  - Safari and Google Chrome™ for iOS
- Ensure that JavaScript and Cookies are always enabled, regardless of which browser you use.
- The default password to manage this machine's settings is located on the bottom of the machine and marked "**Pwd**". We recommend immediately changing the default password to protect your machine from unauthorised access.
- If the password is entered incorrectly several times, you will not be able to log in for a while. The lockout settings can be changed in Web Based Management.
- We recommend using the HTTPS security protocol when configuring settings using Web Based Management. If you use HTTP when configuring settings using Web Based Management, follow the screen prompts to switch to a secure HTTPS connection.
- When you use HTTPS for Web Based Management configuration, your browser will display a warning dialog box. To avoid displaying the warning dialog box, you can install a self-signed certificate to use SSL/TLS communication. For more detailed information, see *Related Information*.

>> Start from Your Web Browser
>> Start from Brother iPrint&Scan (Windows/Mac)
>> Start from Brother Utilities (Windows)

Start from Your Web Browser

1. Start your web browser.
2. Type "https://machine's IP address" in your browser's address bar (where "machine's IP address" is the machine's IP address).

   For example:

   https://192.168.1.2
3. If required, type the password in the **Login** field, and then click **Login**.

   The default password to manage this machine's settings is located on the bottom of the machine and marked "**Pwd**". Change the default password by following the on-screen instructions when you first log in.
4. If you want to pin the navigation menu on the left side of the screen, click ≡ and then click .

You can now change the machine settings.

If you change the protocol settings, you must restart the machine after clicking **Submit** to activate the configuration.

After configuring the settings, click **Logout**.

Start from Brother iPrint&Scan (Windows/Mac)

1. Start Brother iPrint&Scan.
   - Windows

     Launch (**Brother iPrint&Scan**).

- Mac

  In the **Finder** menu bar, click **Go** > **Applications**, and then double-click the iPrint&Scan icon.

The Brother iPrint&Scan screen appears.

2. If your Brother machine is not selected, click the **Select your Machine** button, and then select your model name from the list. Click **OK**.
3. Click (**Machine Settings**).

   Web Based Management appears.
4. If required, type the password in the **Login** field, and then click **Login**.
5. If you want to pin the navigation menu on the left side of the screen, click and then click .

You can now change the machine settings.

If you change the protocol settings, you must restart the machine after clicking **Submit** to activate the configuration.

After configuring the settings, click **Logout**.

Start from Brother Utilities (Windows)

1. Launch (**Brother Utilities**), and then click the drop-down list and select your model name (if not already selected).
2. Click **Tools** in the left navigation bar, and then click **Machine Settings**.

   Web Based Management appears.
3. If required, type the password in the **Login** field, and then click **Login**.
4. If you want to pin the navigation menu on the left side of the screen, click and then click .

You can now change the machine settings.

If you change the protocol settings, you must restart the machine after clicking **Submit** to activate the configuration.

After configuring the settings, click **Logout**.

Related Information

- Change Machine Settings Using Web Based Management

Related Topics:

- Create a Self-signed Certificate
- Install the Self-signed Certificate for Windows Users as Administrator

Change the Login Password Using Web Based Management

Related Models: ADS-1350W/ADS-1800W

The default password to manage this machine's settings is located on the bottom of the machine and marked "**Pwd**". Change the default password by following the on-screen instructions when you first log in. We recommend immediately changing the default password to protect your machine from unauthorised access.

1. Start your web browser.
2. Type "https://machine's IP address" in your browser's address bar (where "machine's IP address" is your machine's IP address).

   For example:

   https://192.168.1.2
3. Do one of the following:
   - If you have previously set your own password, type it, and then click **Login**.
   - If you have not previously set your own password, type the default login password, and then click **Login**.
4. In the left navigation bar, click **Administrator** > **Login Password**.

   - The default password to manage this machine's settings is located on the bottom of the machine and marked "**Pwd**".
   - If the left navigation bar is not visible, start navigating from ≡.
5. Following the on-screen **Login Password** guidelines, type your new password in the **Enter New Password** field.
6. Retype the new password in the **Confirm New Password** field.
7. Click **Submit**.

You can also change the lockout settings in the **Login Password** menu.

Related Information

- Change Machine Settings Using Web Based Management

Related Topics:

- Access Web Based Management
- Check Your Machine's Password

Change the Machine Settings Using Remote Setup

The Remote Setup program lets you configure many of your Brother machine's settings from your computer. When you start Remote Setup, the settings on your Brother machine will be downloaded to your computer and displayed on your screen. If you change the settings on your computer, you can upload them directly to the machine.

- Remote Setup (Windows)
- Remote Setup (Mac)

Remote Setup (Windows)

- Set Up the Brother Machine Using Remote Setup (Windows)
- Change the General Settings Using Remote Setup

Set Up the Brother Machine Using Remote Setup (Windows)

Before using Remote Setup, make sure your machine is connected to your computer using a USB cable. If your machine is connected via a network, use Web Based Management, not Remote Setup, to configure the machine settings.

1. Launch (**Brother Utilities**), and then click the drop-down list and select your model name (if not already selected). Click **Tools** in the left navigation bar, and then click **Remote Setup**.
2. Configure the settings as needed.

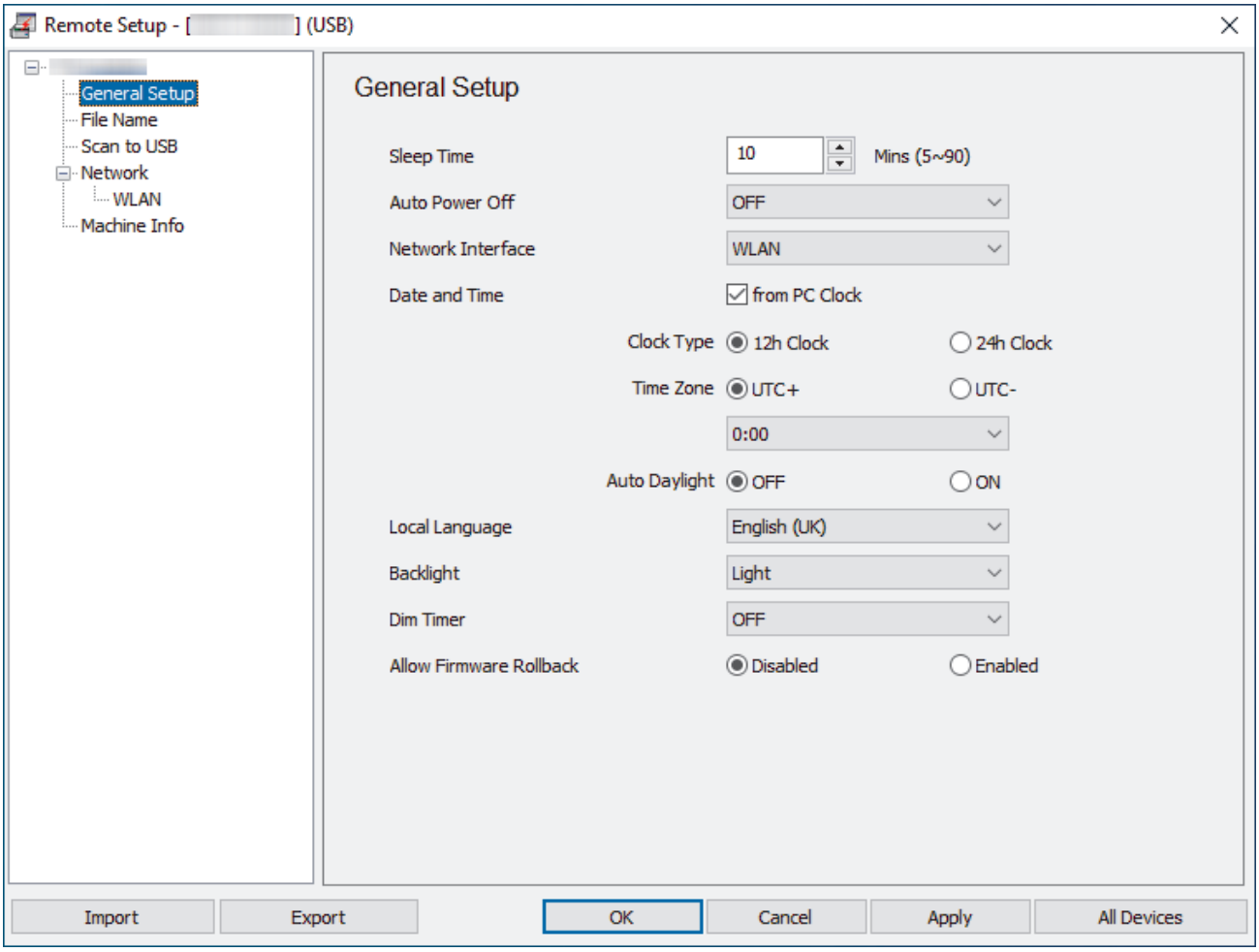

Your screen may differ from the screen shown.

Export

Click to save the current configuration settings to a file.

Import

Click to read the settings from a file.

OK

Click to start uploading data to the machine, and then exit the Remote Setup Program. If an error message appears, confirm that your data is correct, and then click **OK**.

Cancel

Click to exit the Remote Setup Program without uploading data to the machine.

Apply

Click to upload data to the machine without exiting the Remote Setup Program.

All Devices

Click to return to the device selection screen.

3. Click **OK**.

Related Information

- Remote Setup (Windows)

Related Topics:

- Access Web Based Management

Change the General Settings Using Remote Setup

Purpose	Operation (Windows/Mac)	Description
Set the Date and Time	**General Setup** > **Date and Time**	Set the date and time. If you set Auto Daylight to On, the time will be adjusted forward one hour in the spring and adjusted backward one hour in the autumn.
Set Sleep Mode Countdown	**General Setup** > **Sleep Time**	Set how long the machine must be idle before it goes into Sleep Mode (5-90 minutes). The Sleep Mode setting can reduce power consumption. When the machine is in Sleep Mode, it acts as though it is turned off. • The timer will restart if any operation is carried out on the machine. • The default setting is ten minutes.
Change the Language (ADS-1800W)	**General Setup** > **Local Language**	Change your language.

Related Information

- Remote Setup (Windows)
- Remote Setup (Mac)

Remote Setup (Mac)

- Set Up the Brother Machine Using Remote Setup (Mac)
- Change the General Settings Using Remote Setup

Set Up the Brother Machine Using Remote Setup (Mac)

Download and install the Remote Setup at support.brother.com/downloads.

Before using Remote Setup, make sure your machine is connected to your computer using a USB cable. If your machine is connected via a network, use Web Based Management to configure the machine settings.

1. In the **Finder** menu bar, click **Go** > **Applications** > **Brother**, select your model name, and then double-click the **Brother Remote Setup** icon.

   If the **Search Devices** dialog box appears, select your model name and then click **Connect**.

2. Configure the settings as needed.

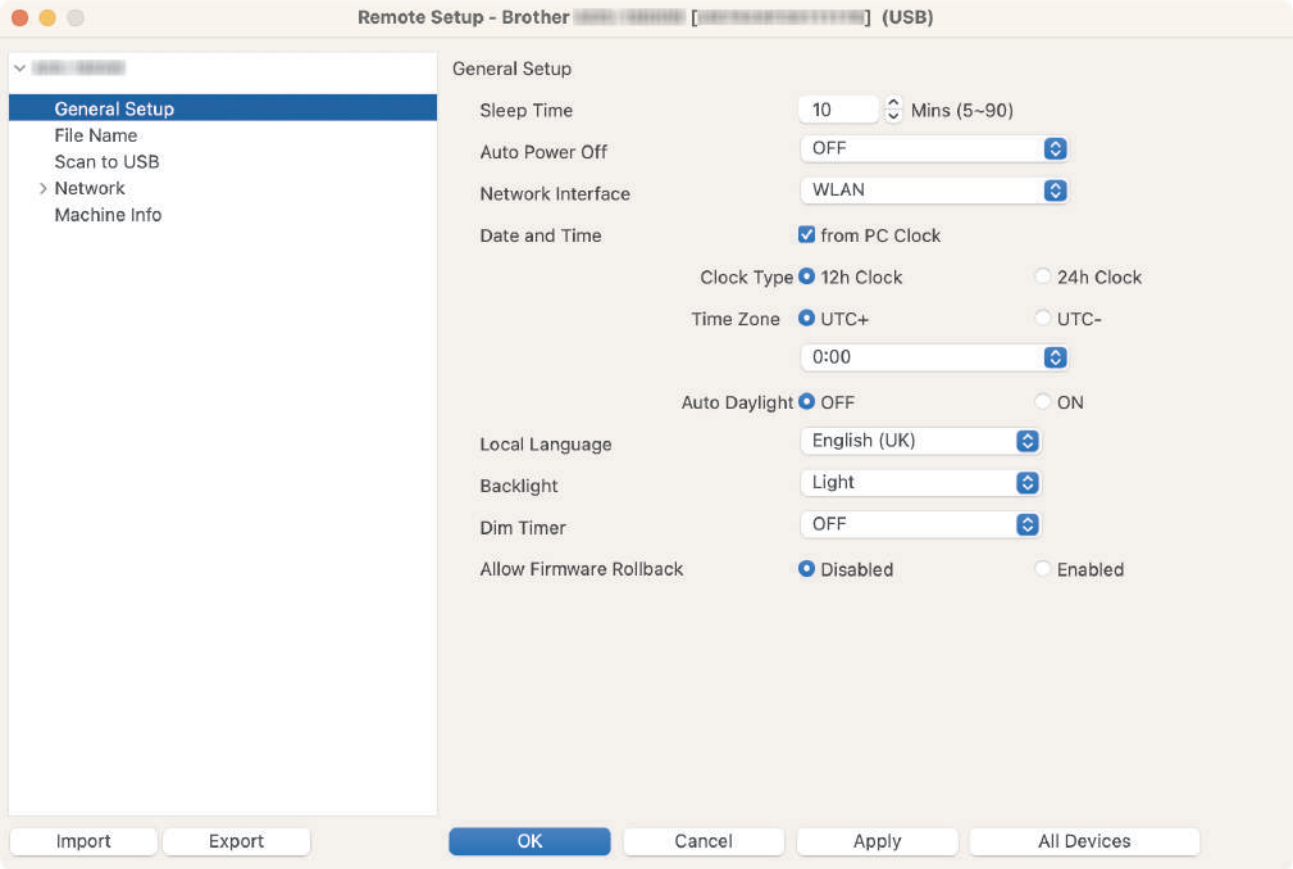

Your screen may differ from the screen shown.

Export

Click to save the current configuration settings to a file.

Import

Click to import a file and read its settings.

OK

Click to start uploading data to the machine, and then exit the Remote Setup Program. If an error message appears, enter the correct data again, and then click **OK**.

Cancel

Click to exit the Remote Setup Program without uploading data to the machine.

Apply

Click to upload data to the machine without exiting the Remote Setup Program.

All Devices

Click to return to the device selection screen.

3. When finished, click **OK**.

Related Information

- Remote Setup (Mac)

Related Topics:

- Access Web Based Management

Change the General Settings Using Remote Setup

Purpose	Operation (Windows/Mac)	Description
Set the Date and Time	**General Setup** > **Date and Time**	Set the date and time. If you set Auto Daylight to On, the time will be adjusted forward one hour in the spring and adjusted backward one hour in the autumn.
Set Sleep Mode Countdown	**General Setup** > **Sleep Time**	Set how long the machine must be idle before it goes into Sleep Mode (5-90 minutes). The Sleep Mode setting can reduce power consumption. When the machine is in Sleep Mode, it acts as though it is turned off. • The timer will restart if any operation is carried out on the machine. • The default setting is ten minutes.
Change the Language (ADS-1800W)	**General Setup** > **Local Language**	Change your language.

Related Information

- Remote Setup (Windows)
- Remote Setup (Mac)

Appendix

- Specifications
- Chemical Substances (EU REACH)
- Brother Help and Customer Support

Specifications

>> General Specifications
>> Document Specifications
>> Scanner Specifications
>> Direct Scan Feature (Scan to USB) Specifications
>> Interface Specifications
>> Network Specifications
>> Supported Protocols and Security Features
>> Computer Requirements Specifications

General Specifications

Memory Capacity	**Standard**	ADS-1300: 256 MB ADS-1350W/ADS-1800W: 512 MB
Power Source	**DC**	5V, 3A [1]
	AC Adapter [2]	• INPUT: AC 100 to 240 V 50/60 Hz • OUTPUT: DC 5V, 3A
Touchscreen LCD (Liquid Crystal Display) [3] (ADS-1800W)		Touchscreen 71.1 mm TFT Colour LCD
Power Consumption [4] [5]	**Scanning** [6]	ADS-1300 • AC: Approximately 11 W • DC: Approximately 9 W ADS-1350W • AC: Approximately 11 W • DC: Approximately 9 W ADS-1800W • AC: Approximately 12 W • DC: Approximately 10 W
	Ready	ADS-1300 • AC: Approximately 5 W • DC: Approximately 4 W ADS-1350W • AC: Approximately 5.5 W • DC: Approximately 4.4 W ADS-1800W • AC: Approximately 6.4 W • DC: Approximately 5.2 W
	Sleep	ADS-1300 • AC: Approximately 1.3 W • DC: Approximately 1 W ADS-1350W • AC: Approximately 1.4 W • DC: Approximately 1 W ADS-1800W • AC: Approximately 1.5 W • DC: Approximately 1.1 W
	Power Down	ADS-1300 • AC: Approximately 0.1 W • DC: Approximately 0.1 W

Power Consumption [4] [5]		ADS-1350W • AC: Approximately 0.1 W • DC: Approximately 0.1 W ADS-1800W • AC: Approximately 0.1 W • DC: Approximately 0.1 W
Dimensions 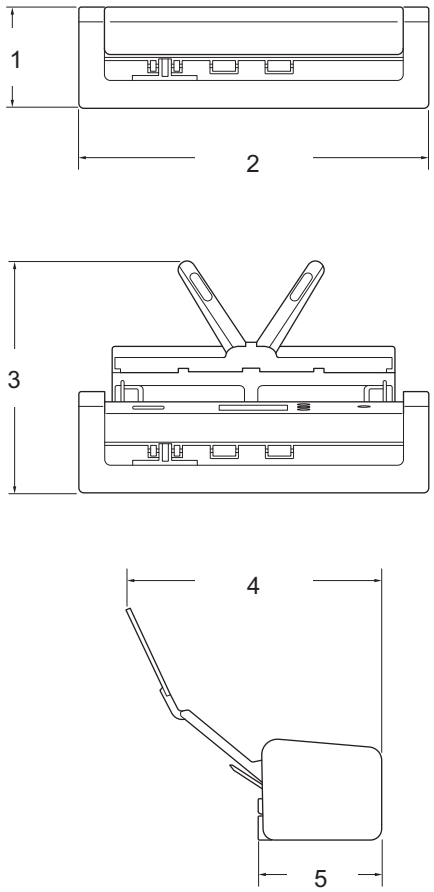 		1: 85 mm 2: 288 mm 3: 205 mm 4: 211 mm 5: 101 mm
Weights		ADS-1300: Approximately 1.37 kg ADS-1350W: Approximately 1.37 kg ADS-1800W: Approximately 1.42 kg
Temperature	**Operating**	5°C to 35°C
	Storage	0°C to 40°C
Humidity	**Operating**	20% to 80%
	Storage	10% to 90%
ADF (Automatic Document Feeder)		Up to 20 sheets (Paper: 80 g/㎡ A4/Letter size)

1 USB Type-C is supported.
2 The AC Adapter is an optional accessory and is available on the Brother website by searching for part number LK-1001C.
3 Measured diagonally.
4 Measured when the machine is connected to your computer.
5 When the USB port is connected.
6 When using 2-sided (duplex) colour scanning at resolutions 300 x 300 dpi.

Document Specifications

Paper Type		Plain Paper, Thin Paper, Thick Paper, Thicker Paper, Non Carbon Paper, Receipt, Recycled Paper, Business Card, Plastic Card
Document Size	**Width**	50.8 mm to 215.9 mm
	Length [1]	70 mm to 355.6 mm
Carrier Sheet Restrictions	**Width**	Documents narrower than 50.8 mm
	Length	Documents shorter than 70 mm
	Thickness	Pages thinner than 0.08 mm

[1] Up to 5000 mm when using the Long Paper function.

Scanner Specifications

Colour/Monochrome		Yes/Yes
TWAIN Compliant	**Windows**	Windows 10 / Windows 11
WIA Compliant	**Windows**	Windows 10 / Windows 11
ICA Compliant (ADS-1300)	**Mac**	macOS v11.x / macOS 12.x / macOS 13.x
Colour Depth	**Input**	48 bit colour processing
	Output	24 bit colour processing
Resolution	**Interpolated**	Up to 1200 x 1200 dpi
	Optical	Up to 600 x 600 dpi
Scanning Width		Up to 215.9 mm
Greyscale		256 levels
Max. Speed		For detailed specifications, visit www.brother.com.

Direct Scan Feature (Scan to USB) Specifications

Compatible Media	USB flash drive [1]
Interface	Interface USB 2.0 Hi Speed

[1] USB Mass Storage standard up to 128 GB
Supported formats: FAT12/FAT16/FAT32/exFAT

Interface Specifications

USB	USB 3.2 Gen1 Use a USB Type-A to USB Type-C Cable [1] or a USB Type-C to USB Type-C Cable that supports USB Super Speed or USB 2.0 High speed and is no more than 2.0 metres long.
Wireless LAN (ADS-1350W/ ADS-1800W)	2.4 GHz band IEEE 802.11b/g/n (Infrastructure Mode) IEEE 802.11g/n (Wi-Fi Direct) (ADS-1800W) IEEE 802.11g/n (Wireless Direct) (ADS-1350W)

[1] USB Type-A to USB Type-C Cables do not support USB power.

Network Specifications

Wireless Network Security	WEP 64/128 bit, WPA-PSK (TKIP/AES), WPA2-PSK (TKIP/AES), WPA3-SAE (AES)

Setup Support Utility	WPS

Supported Protocols and Security Features

Protocol (IPv4)	• ADS-1350W DHCP, APIPA (Auto IP), WINS/NetBIOS name resolution, DNS Resolver, mDNS, LLMNR responder, SNMPv1/v2c/v3, ICMP, Web Services (Scan), SNTP Client • ADS-1800W DHCP, APIPA (Auto IP), WINS/NetBIOS name resolution, DNS Resolver, mDNS, LLMNR responder, SMTP Client, FTP/SFTP Client, CIFS Client, SNMPv1/v2c/v3, HTTP/HTTPS server, ICMP, Web Services (Scan), SNTP Client
Protocol (IPv6)	• ADS-1350W RA, DNS Resolver, mDNS, LLMNR responder, ICMPv6, Web Services (Scan), SNTP Client, SNMPv1/v2c/v3 • ADS-1800W RA, DNS Resolver, mDNS, LLMNR responder, SMTP Client, FTP Client, CIFS Client, HTTP/HTTPS server, ICMPv6, Web Services (Scan), SNTP Client, SNMPv1/v2c/v3
Network Security (Wireless)	• ADS-1350W SSL/TLS (HTTPS), SNMP v3, 802.1x (EAP-FAST, PEAP, EAP-TLS, EAP-TTLS) • ADS-1800W SMTP-AUTH, SSL/TLS (HTTPS, SMTP), SNMP v3, SSH, 802.1x (EAP-FAST, PEAP, EAP-TLS, EAP-TTLS)
Network Security (Email) (ADS-1800W)	SMTP-AUTH, SSL/TLS (SMTP)
Wi-Fi Certification	• ADS-1350W Wi-Fi CERTIFIED™, WPA3™-Enterprise/Personal, Wi-Fi Protected Setup™ (WPS) • ADS-1800W Wi-Fi CERTIFIED™, WPA3™-Enterprise/Personal, Wi-Fi Protected Setup™ (WPS) , Wi-Fi Direct®

Computer Requirements Specifications

Computer Platform & Operating System Version		**Supported PC Software Functions**	**PC Interface**	**Processor Minimum Speed**	**Hard Disk Space to Install**	
					For Drivers	**For Applications**
Windows Operating System	Windows 10 Windows 11	Scanning	USB WLAN (Wi-Fi) [1]	32bit (x86) or 64bit (x64) processor	70 MB	Drivers, Installer and Software: 1.4 GB
Mac Operating System	macOS v11.x macOS v12.x macOS v13.x			64bit processor	30 MB	Drivers and Software: 600 MB

[1] ADS-1350W/ADS-1800W only

For the latest driver updates, go to your model's **Downloads** page at support.brother.com/downloads.

For the latest supported OS, go to your model's **Supported OS** page at support.brother.com/os.

All trademarks, brand and product names are the property of their respective companies.

Related Information

- Appendix

Chemical Substances (EU REACH)

Information concerning chemical substances within our products required for the REACH Regulation can be found at https://www.brother.eu/reach.

Related Information

- Appendix

Brother Help and Customer Support

If you need help with using your Brother product, visit support.brother.com for FAQs and troubleshooting tips. You can also download the latest software, drivers and firmware, to improve the performance of your machine, and user documentation, to learn how to get the most from your Brother product.

Further product and support information is available from your local Brother office website. Visit www.brother.com to find the contact details for your local Brother office and to register your new product.

Related Information

- Appendix

brother

Brother Earth

www.brotherearth.com

UK
Version 0