brother®

USER'S GUIDE

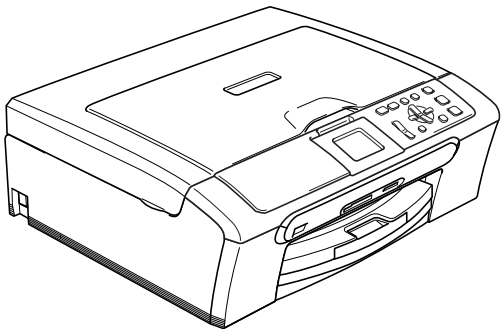

DCP-350C
DCP-560CN

If you need to call Customer Service

Please complete the following information for future reference:

Model Number: DCP-350C and DCP-560CN (Circle your model number)

Serial Number: [1] _____

Date of Purchase: _____

Place of Purchase: _____

[1] The serial number is on the back of the unit. Retain this User's Guide with your sales receipt as a permanent record of your purchase, in the event of theft, fire or warranty service.

Register your product on-line at

http://www.brother.com/registration/

By registering your product with Brother, you will be recorded as the original owner of the product. Your registration with Brother:

- may serve as confirmation of the purchase date of your product should you lose your receipt; and
- may support an insurance claim by you in the event of product loss covered by insurance.

© 2007 Brother Industries, Ltd.

Approval Information and Compilation and Publication Notice

Under the supervision of Brother Industries Ltd., this manual has been compiled and published, covering the latest product descriptions and specifications.

The contents of this manual and the specifications of this product are subject to change without notice.

Brother reserves the right to make changes without notice in the specifications and materials contained herein and shall not be responsible for any damages (including consequential) caused by reliance on the materials presented, including but not limited to typographical and other errors relating to the publication.

Table of Contents

Section I General

1 General Information 2

Using the documentation 2
Symbols and conventions used in the documentation 2
Accessing the Software User's Guide and Network User's Guide 3
Viewing Documentation 3
Control panel overview 6
LCD display indications 8
Basic Operations 8
Warning LED indications 9
Printing Reports 9

2 Loading documents and paper 10

Loading documents 10
Using the ADF (DCP-560CN only) 10
Using the scanner glass 11
Scannable area 11
Acceptable paper and other media 12
Recommended media 12
Handling and using media 13
Choosing the right media 14
Loading paper and other media 16
Loading envelopes and post cards 18
Loading photo paper 20
Removing small printouts from the machine 21
Printable area 22

3 General setup 23

Paper settings 23
Paper Type 23
Paper Size 23
LCD display 24
LCD Contrast 24
Setting the backlight brightness 24
Setting the Dim Timer for the backlight 25
Setting the Off Timer 25

Section II Copy

4 Making copies 28

How to copy 28
Making a single copy 28
Making multiple copies 28
Stop copying 28
Copy options 28
Changing copy speed and quality 29
Enlarging or reducing the image copied 29
Making N in 1 copies or a poster (page layout) 30
Sorting copies using the ADF (DCP-560CN only) 31
Adjusting Brightness, Contrast and Colour 31
Paper options 32
Setting your changes as a new default 32
Restoring all settings to the factory settings 32

Section III Direct Photo Printing

5 Printing photos from a memory card or USB Flash memory drive 34

PhotoCapture Center™ Operations 34
Printing from a memory card or USB Flash memory drive without a PC 34
Scanning to a memory card or USB Flash memory drive without a PC 34
Using PhotoCapture Center™ from your computer 34
Using a memory card or USB Flash memory drive 34
Memory cards or a USB Flash memory drive folder structure 35
Getting started 36
Entering PhotoCapture mode 37
Print Images 37
View Photo(s) 37
Print Index (Thumbnails) 37
Print Photos 38
Photo Effects 39
Search by Date 41
Print All Photos 42
Slide show 42
Trimming 43
DPOF printing 43

PhotoCapture Center™ print settings 44
Print Speed and Quality 45
Paper options 45
Adjusting Brightness, Contrast and Colour 46
Cropping 47
Borderless printing 47
Setting your changes as a new default 47
Restoring all settings to the factory settings 47
Scan to a memory card or USB Flash memory drive 48
Entering Scan mode 48
How to scan to a memory card or USB Flash memory drive 48
Understanding the Error Messages 49

6 Printing photos from a camera 50

Printing photos directly from a PictBridge camera 50
PictBridge requirements 50
Setting your digital camera 50
Printing Images 51
DPOF printing 51
Printing photos directly from a digital camera (without PictBridge) 52
Printing Images 52
Understanding the Error Messages 53

Section IV Software

7 Software and Network features 56

Section V Appendixes

A Safety and Legal 58

Choosing a location 58
To use the machine safely 59
Important safety instructions 62
IMPORTANT - For your safety 63
LAN connection (DCP-560CN only) 63
Legal limitations for copying 64
Trademarks 65

B Troubleshooting and Routine Maintenance 66

Troubleshooting 66
If you are having difficulty with your machine 66
Error messages 70
Changing LCD language 72
Error animation 72
Document jam (DCP-560CN only) 72
Printer jam or paper jam 73
Routine maintenance 75
Replacing the ink cartridges 75
Cleaning the outside of the machine 77
Cleaning the scanner 78
Cleaning the machine printer platen 79
Cleaning the paper pick-up roller 79
Cleaning the print head 80
Checking the print quality 80
Checking the print alignment 81
Checking the ink volume 81
Machine Information 82
Checking the serial number 82
Packing and shipping the machine 82

C Menu and Features 84

On-screen programming 84
Menu table 84
Mode and menu keys 84
Menu table 85

D Specifications 93

General 93
Print media 95
Copy 96
PhotoCapture Center™ 97
PictBridge 98
Scanner 99
Printer 100
Interfaces 101
Computer requirements 102
Consumable items 103
Network (LAN) (DCP-560CN only) 104

E Glossary 105

F Index 106

Section I

General

General Information 2
Loading documents and paper 10
General setup 23

1 General Information

Using the documentation

Thank you for buying a Brother machine! Reading the documentation will help you make the most of your machine.

Symbols and conventions used in the documentation

The following symbols and conventions are used throughout the documentation.

Bold	Bold typeface identifies specific keys on the machine's control panel.
Italics	Italicized typeface emphasizes an important point or refers you to a related topic.
`Courier New`	Text in the Courier New font identifies messages on the LCD of the machine.

Warnings tell you what to do to prevent possible personal injury.

Electrical Hazard icons alert you to possible electrical shock.

Cautions specify procedures you must follow or avoid to prevent possible damage to the machine or other objects.

Notes tell you how you should respond to a situation that may arise or give tips about how the operation works with other features.

Improper Setup icons alert you to devices and operations that are not compatible with the machine.

Accessing the Software User's Guide and Network User's Guide

This User's Guide does not contain all the information about the machine such as how to use the advanced features of Printer, Scanner and Network (DCP-560CN only). When you are ready to learn detailed information about these operations, read the **Software User's Guide** and **Network User's Guide**.

Viewing Documentation

Viewing Documentation (For Windows®)

To view the documentation, from the **Start** menu, point to **Brother**, **DCP-XXXX** (where XXXX is your model name) from the programs group, and then choose **User's Guides** in HTML format.

If you have not installed the software, you can find the documentation by following the instructions below:

1. Turn on your PC. Insert the Brother CD-ROM into your CD-ROM drive.
2. If the model name screen appears, click your model name.
3. If the language screen appears, click your language. The CD-ROM main menu will appear.

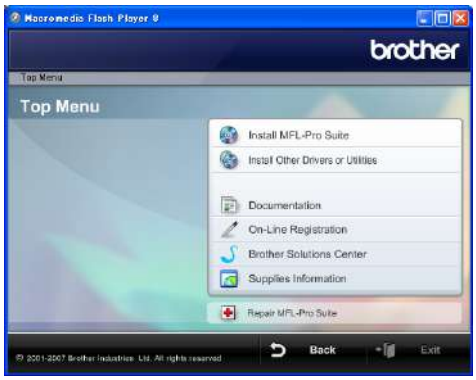

Note

If this window does not appear, use Windows® Explorer to run the start.exe program from the root directory of the Brother CD-ROM.

4. Click **Documentation**.
5. Click the documentation you want to read.
   - **HTML documents**: **Software User's Guide** and **Network User's Guide** in HTML format.

     This format is recommended for viewing on your computer.
   - **PDF documents**: **User's Guide** for stand-alone operations, **Software User's Guide** and **Network User's Guide** in PDF format.

     This format is recommended for printing the manuals. Click to go to the Brother Solutions Center, where you can view or download the PDF documents. (Internet access and PDF Reader software are required.)

How to find Scanning instructions

There are several ways you can scan documents. You can find the instructions as follows:

Software User's Guide

- *Scanning*
  (For Windows® 2000 Professional/Windows® XP and Windows Vista™)
- *ControlCenter3*
  (For Windows® 2000 Professional/Windows® XP and Windows Vista™)
- *Network Scanning*
  (DCP-560CN only)

Scansoft™ PaperPort™ 11SE with OCR How-to-Guides

- The complete ScanSoft™ PaperPort™ 11SE with OCR How-to-Guides can be viewed from the Help selection in the ScanSoft™ PaperPort™ 11SE with OCR application.

Viewing Documentation (For Macintosh®)

1. Turn on your Macintosh®. Insert the Brother CD-ROM into your CD-ROM drive. The following window will appear.

2. Double-click the **Documentation** icon.
3. Double-click your language folder.
4. Double-click the top page file to view the **Software User's Guide** and **Network User's Guide** in HTML format.
5. Click the documentation you want to read.
   - **Software User's Guide**
   - **Network User's Guide**
     (DCP-560CN only)

How to find Scanning instructions

There are several ways you can scan documents. You can find the instructions as follows:

Software User's Guide

- *Scanning*
  (For Mac OS® X 10.2.4 or greater)
- *ControlCenter2*
  (For Mac OS® X 10.2.4 or greater)
- *Network Scanning*
  (For Mac OS® X 10.2.4 or greater)
  (DCP-560CN only)

Presto!® PageManager® User's Guide

- The complete Presto!® PageManager® User's Guide can be viewed from the Help selection in the Presto!® PageManager® application.

Control panel overview

The **DCP-350C** and **DCP-560CN** have the same control panel keys.

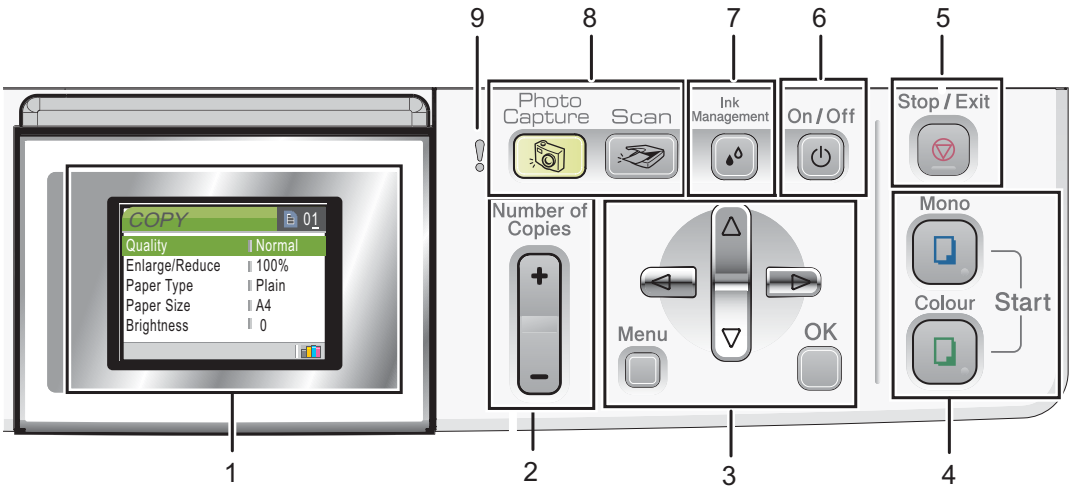

1 LCD (liquid crystal display)

Displays messages on the screen to help you set up and use your machine.

Also, you can adjust the angle of the LCD display by lifting it.

2 Number of Copies

Use this key to make multiple copies.

3 Menu keys:

- ◀ or ▶

  Press to scroll backward or forward to a menu selection.

- ▲ or ▼

  Press to scroll through the menus and options.

- **Menu**

  Lets you access the main menu to program the machine.

- **OK**

  Lets you choose a setting.

4 Start keys:

- **Colour Start**

  Lets you start making copies in full colour. Also lets you start a scanning operation (in colour or mono, depending on the scanning setting in the ControlCenter software).

- **Mono Start**

  Lets you start making copies in monochrome. Also lets you start a scanning operation (in colour or mono, depending on the scanning setting in the ControlCenter software).

5 **Stop/Exit**

Stops an operation or exits from a menu.

6 **On/Off**

You can turn the machine on and off.

If you turn the machine off, it will still periodically clean the print head to maintain print quality.

7 **Ink Management**

Lets you clean the print head, check the print quality, and check the available ink volume.

8 **Mode keys**

- **Scan**

  Lets you access Scan mode.

- **PhotoCapture**

  Lets you access PhotoCapture Center™ mode.

9 **Warning LED**

Turns red when the LCD displays an error or an important status message.

Note

Most of the illustrations in this User's Guide show the DCP-350C.

LCD display indications

The LCD display screen shows the mode the machine is in, the current settings, and the available ink volume.

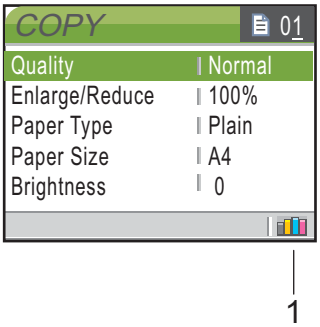

1 Ink indicator

Lets you see the available ink volume.

Basic Operations

The following steps show how to change a setting in the machine. In this example the Paper Type setting is changed from `Plain Paper` to `Inkjet Paper`.

1. Press **Menu**.
2. Press ▲ or ▼ to choose `General Setup`.

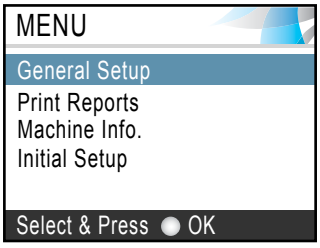

Press **OK**.

3. Press ▲ or ▼ to choose `Paper Type`.

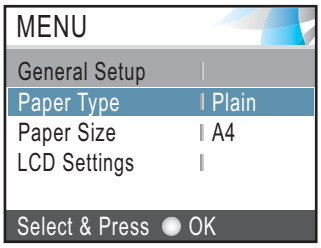

Press **OK**.

4. Press ▲ or ▼ to choose `Inkjet Paper`.

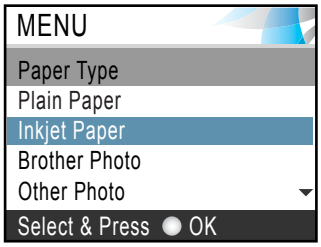

Press **OK**.
You can see the current setting on the LCD:

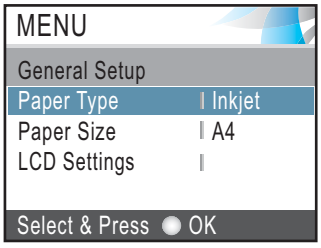

5. Press **Stop/Exit**.

Warning LED indications

The Status LED (light emitting diode) is a light that shows the status of the machine, as shown in the table.

LED	DCP status	Description
Off	Ready	The DCP is ready for use.
Red	Cover open	The cover is open. Close the cover. (See *Error messages* on page 70.)
	Ink empty	Replace the Ink cartridge with a new one. (See *Replacing the ink cartridges* on page 75.)
	Paper error	Put paper in the tray or clear the paper jam. Check the LCD message. (See *Error messages* on page 70.)
	Other messages	Check the LCD message. (See *Error messages* on page 70.)

Printing Reports

The following reports are available:

- `Help List`

  A help list about how to quickly program your machine.

- `User Settings`

  Lists your settings.

- `Network Config` (DCP-560CN only)

  Lists your Network settings.

How to print a report

1. Press **Menu**.
2. Press ▲ or ▼ to choose `Print Reports`.
   Press **OK**.
3. Press ▲ or ▼ to choose the report you want.
   Press **OK**.
4. Press **Mono Start**.
5. Press **Stop/Exit**.

2 Loading documents and paper

Loading documents

You can make copies, and scan from the ADF (automatic document feeder) and from the scanner glass.

Using the ADF (DCP-560CN only)

The ADF can hold up to 10 pages and feeds each sheet individually. Use standard 80 gsm paper and always fan the pages before putting them in the ADF.

Recommended environment

Temperature:	20 to 30°C
Humidity:	50% to 70%
Paper:	80 gsm A4

Document Sizes Supported

Length:	148 to 355.6 mm
Width:	148 to 215.9 mm
Weight:	64 to 90 gsm

How to load documents

CAUTION

DO NOT pull on the document while it is feeding.

DO NOT use paper that is curled, wrinkled, folded, ripped, stapled, paper clipped, pasted or taped.

DO NOT use cardboard, newspaper or fabric.

- Make sure documents written with ink are completely dry.

1. Fan the pages well. Make sure you put the documents **face down, top edge first** in the ADF until you feel them touch the feed roller.
2. Adjust the paper guides to fit the width of your documents.
3. Unfold the ADF Document Output Support Flap (1).

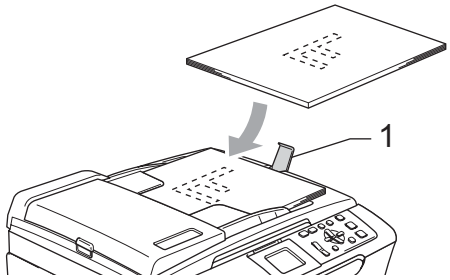

CAUTION

DO NOT leave thick documents on the scanner glass. If you do this, the ADF may jam.

Using the scanner glass

You can use the scanner glass to copy or scan pages of a book or one page at a time.

Document Sizes Supported

Length:	Up to 297 mm
Width:	Up to 215.9mm
Weight:	Up to 2 kg

How to load documents

Note

To use the scanner glass, the ADF must be empty.

1. Lift the document cover.
2. Using the document guidelines on the left, center the document face down on the scanner glass.

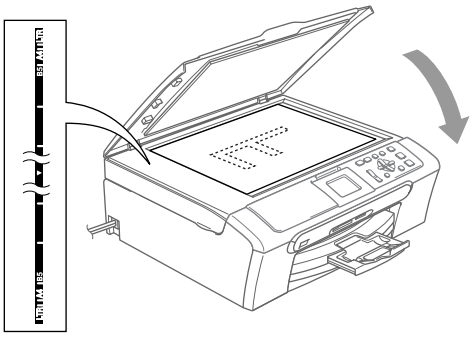

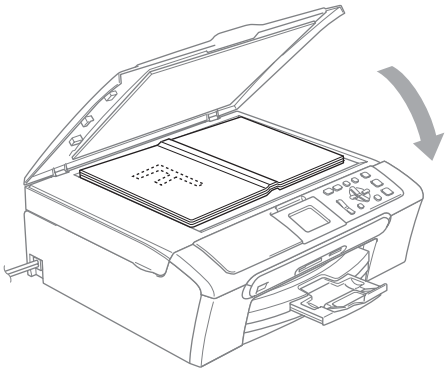

3. Close the document cover.

CAUTION

If you are scanning a book or thick document, DO NOT slam the cover down or press on it.

Scannable area

The scannable area depends on the settings in the application you are using. The figures below show the areas you cannot scan on A4 or Letter paper.

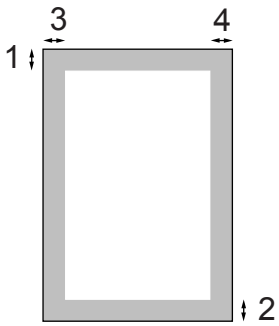

Usage	Document Size	Top (1) Bottom (2)	Left (3) Right (4)
Copy	Letter	3 mm	3 mm
	A4	3 mm	3 mm
Scan	Letter	3 mm	3 mm
	A4	3 mm	0 mm

Acceptable paper and other media

The print quality can be affected by the type of paper you are using in the machine.

To get the best print quality for the settings you have chosen, always set the Paper Type to match the type of paper you load.

You can use plain paper, inkjet paper (coated paper), glossy paper, transparencies and envelopes.

We recommend testing various paper types before buying large quantities.

For best results, use Brother paper.

- When you print on inkjet paper (coated paper), transparencies and photo paper, be sure to choose the correct media in the '**Basic**' tab of the printer driver or in the Paper Type setting of the menu. (See *Paper Type* on page 32.)
- When you print on Brother photo paper, load the instruction sheet included with the photo paper in the paper tray first, and then put the photo paper on top of the instruction sheet.
- When you use transparencies or photo paper, remove each sheet at once to prevent smudging or paper jams.
- Avoid touching the printed surface of the paper immediately after printing; the surface may not be completely dry and may stain your fingers.

Recommended media

To get the best print quality, we suggest using Brother paper. (See table below.)

If Brother paper is not available in your country, we recommend testing various papers before purchasing large quantities.

We recommend using '3M Transparency Film' when you print on transparencies.

Brother paper

Paper Type	Item
A4 Plain	BP60PA
A4 Glossy Photo	BP61GLA
A4 Inkjet (Matte)	BP60MA
10 x 15 cm Glossy	BP61GLP

Handling and using media

- Store paper in its original packaging, and keep it sealed. Keep the paper flat and away from moisture, direct sunlight and heat.
- The coated side of photo paper is shiny. Avoid touching the shiny (coated) side. Load photo paper with the shiny side facing down.
- Avoid touching either side of transparencies because they absorb water and perspiration easily, and this may cause decreased output quality. Transparencies designed for laser printers/copiers may stain your next document. Use only transparencies recommended for inkjet printing.

Improper Setup

DO NOT use the following kinds of paper:

- Damaged, curled, wrinkled, or irregularly shaped paper

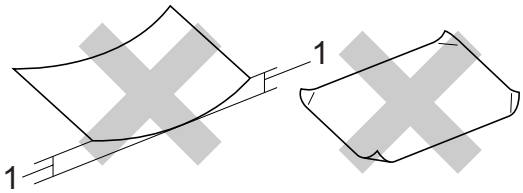

1 2 mm or longer

- Extremely shiny or highly textured paper
- Paper already printed on by a printer
- Paper that cannot be arranged uniformly when stacked
- Paper made with a short grain

Paper capacity of the output paper tray

Up to 50 sheets of 20 lb Letter or 80 gsm A4 paper.

- Transparencies or photo paper must be picked up from the output paper tray one page at a time to avoid smudging.

Choosing the right media

Paper type and size for each operation

Paper Type	Paper Size		Usage		
			Copy	Photo Capture	Printer
Cut Sheet	Letter	216 × 279 mm (8 1/2 × 11 in.)	Yes	Yes	Yes
	A4	210 × 297 mm (8.3 × 11.7 in.)	Yes	Yes	Yes
	Legal	216 × 356 mm (8 1/2 × 14 in.)	Yes	–	Yes
	Executive	184 × 267 mm (7 1/4 × 10 1/2 in.)	–	–	Yes
	JIS B5	182 × 257 mm (7.2 × 10.1 in.)	–	–	Yes
	A5	148 × 210 mm (5.8 × 8.3 in.)	Yes	–	Yes
	A6	105 × 148 mm (4.1 × 5.8 in.)	–	–	Yes
Cards	Photo	10 × 15 cm (4 × 6 in.)	Yes	Yes	Yes
	Photo L	89 × 127 mm (3 1/2 × 5 in.)	–	–	Yes
	Photo 2L	13 × 18 cm (5 × 7 in.)	–	Yes	Yes
	Index Card	127 × 203 mm (5 × 8 in.)	–	–	Yes
	Post Card 1	100 × 148 mm (3.9 × 5.8 in.)	–	–	Yes
	Post Card 2 (Double)	148 × 200 mm (5.8 × 7.9 in.)	–	–	Yes
Envelopes	C5 Envelope	162 × 229 mm (6.4 × 9 in.)	–	–	Yes
	DL Envelope	110 × 220 mm (4.3 × 8.7 in.)	–	–	Yes
	COM-10	105 × 241 mm (4 1/8 × 9 1/2 in.)	–	–	Yes
	Monarch	98 × 191 mm (3 7/8 × 7 1/2 in.)	–	–	Yes
	JE4 Envelope	105 × 235 mm (4.1 × 9.3 in.)	–	–	Yes
Transparencies	Letter	216 × 279 mm (8 1/2 × 11 in.)	Yes	–	Yes
	A4	210 × 297 mm (8.3 × 11.7 in.)	Yes	–	Yes

Paper weight, thickness and capacity

Paper Type		Weight	Thickness	No. of sheets
Cut Sheet	Plain Paper	64 to 120 gsm (17 to 32 lb)	0.08 to 0.15 mm (0.003 to 0.006 in.)	100 [1]
	Inkjet Paper	64 to 200 gsm (17 to 53 lb)	0.08 to 0.25 mm (0.003 to 0.01 in.)	20
	Glossy Paper	Up to 220 gsm (Up to 58 lb)	Up to 0.25 mm (Up to 0.01 in.)	20 [2]
Cards	Photo Card	Up to 220 gsm (Up to 64 lb)	Up to 0.28 mm (Up to 0.01 in.)	20 [2]
	Index Card	Up to 120 gsm (Up to 32 lb)	Up to 0.15 mm (Up to 0.006 in.)	30
	Post Card	Up to 200 gsm (Up to 53 lb)	Up to 0.23 mm (Up to 0.01 in.)	30
Envelopes		75 to 95 gsm (20 to 25 lb)	Up to 0.52 mm (Up to 0.02 in.)	10
Transparencies		–	–	10

[1] Up to 50 sheets for Legal size paper 80 gsm (20 lb).
Up to 100 sheets of A4 80 gsm (20 lb) paper.

[2] For Photo 10×15cm and Photo L paper, use the photo paper tray. (See *Loading photo paper* on page 20.)

Loading paper and other media

Note

To print on Photo L or 10 x 15 cm paper, you must use the photo paper tray. (See *Loading photo paper* on page 20.)

1. If the paper support flap is open, close it, and then pull the paper tray completely out of the machine.
   Lift the output paper tray cover (1).

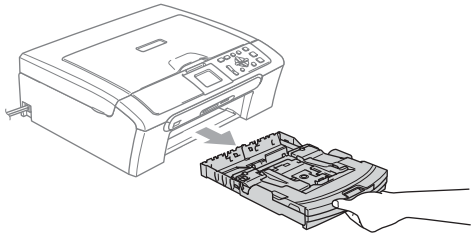

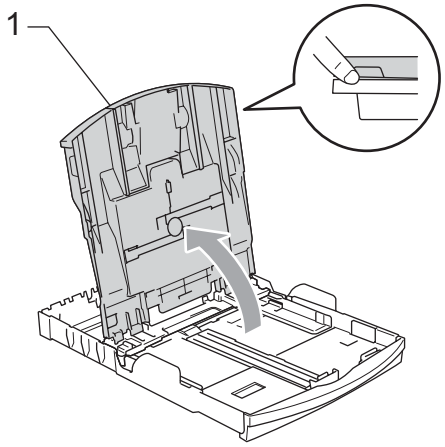

2. Press and slide the paper side guides (1) and paper length guide (2) to fit the paper size.

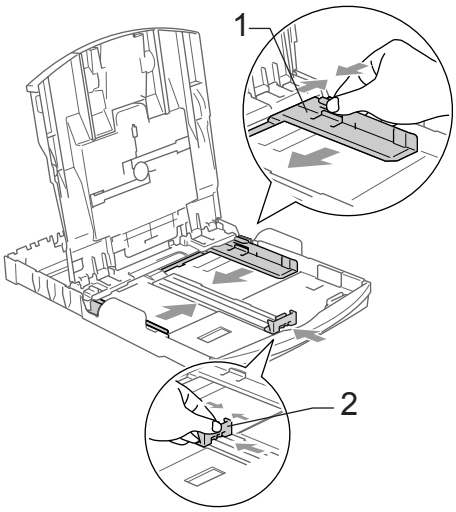

3. Fan the stack of paper well to avoid paper jams and misfeeds.

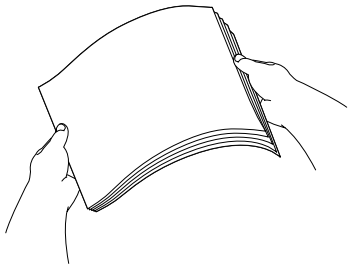

Note

Always make sure that the paper is not curled.

4 Gently put the paper into the paper tray print side down and top edge first. Check that the paper is flat in the tray.

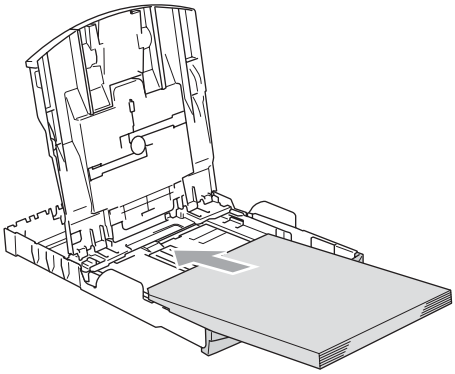

Note

When you use Legal size paper, press and hold the universal guide release button as you slide out the front of the paper tray.

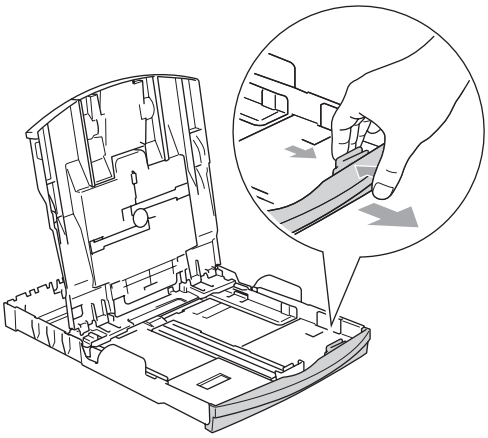

5 Gently adjust the paper side guides to the paper with both hands.
Make sure the paper side guides touch the sides of the paper.

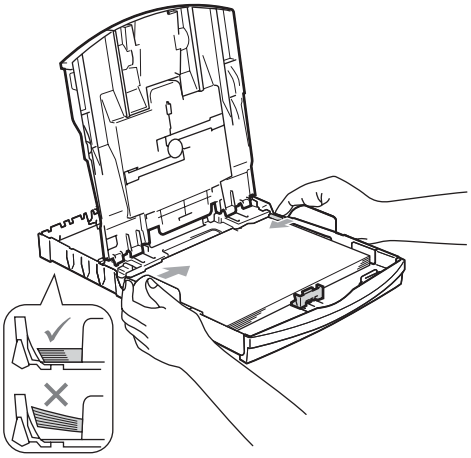

Note

Be careful that you do not push the paper in too far; it may lift at the back of the tray and cause feed problems.

6 Close the output paper tray cover.

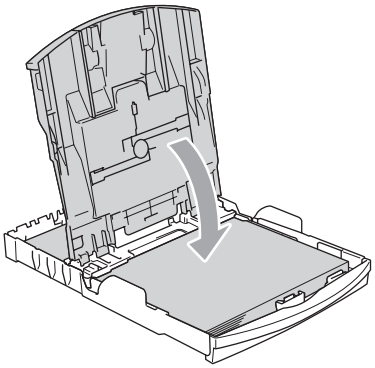

7 Slowly push the paper tray completely into the machine.

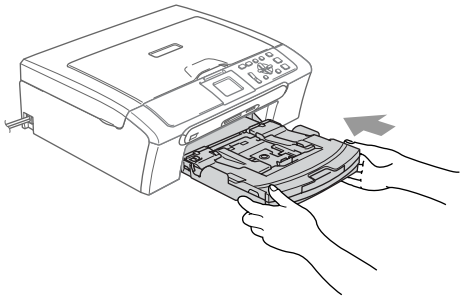

8 While holding the paper tray in place, pull out the paper support (1) until it clicks and unfold the paper support flap (2).

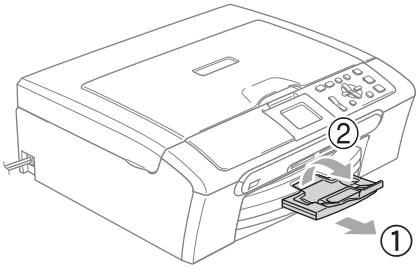

Note

Do not use the paper support flap for Legal paper.

Loading envelopes and post cards

About envelopes

- Use envelopes that weigh from 75 to 95 gsm.
- Some envelopes need margin settings to be set in the application. Make sure you do a test print first.

CAUTION

DO NOT use any of the following types of envelopes, as they will cause paper feed problems:

- That are of a baggy construction.
- That are embossed (have raised writing on them).
- That have clasps or staples.
- That are pre-printed on the inside.

Glue	Double flap

Occasionally you may experience paper feed problems caused by the thickness, size and flap shape of the envelopes you are using.

How to load envelopes and post cards

1. Before loading, press the corners and sides of the envelopes or post cards to make them as flat as possible.

Note

If the envelopes or post cards are ‘double-feeding,’ put one envelope or post card in the paper tray at a time.

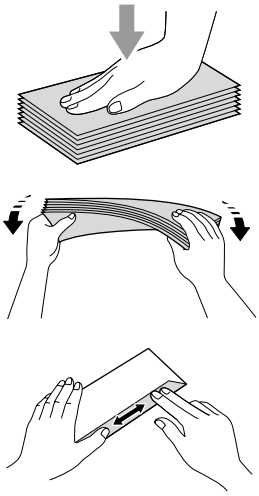

2. Put the envelopes or post cards into the paper tray with the address side down and the leading edge in first as shown in the illustration. Slide the paper side guides (1) and paper length guide (2) to fit the size of the envelopes or post cards.

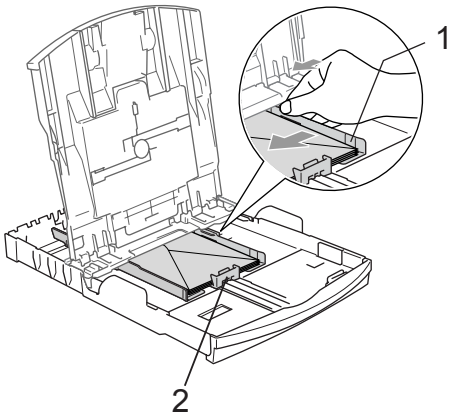

If you have problems when printing on envelopes, try the following suggestions:

1. Open the envelope flap.
2. Make sure the open flap is either to the side of the envelope or to the back edge of the envelope when printing.
3. Adjust the size and margin in your application.

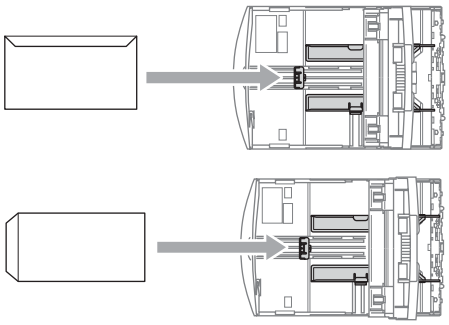

Loading photo paper

Use the photo paper tray which has been assembled on the top of the output paper tray cover to print on photo 10 × 15 cm and photo L size paper. When you use the photo paper tray, you do not have to take out the paper that is in the tray beneath it.

1. Press the photo paper tray release button with your left thumb and push the photo paper tray backward until it clicks into the photo printing position.

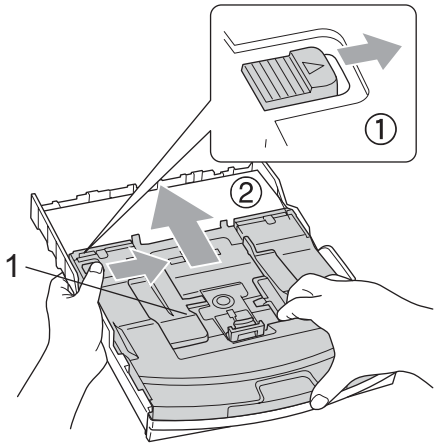

1 Photo Paper Tray

2. Press and slide the paper side guides (1) and paper length guide (2) to fit the paper size.

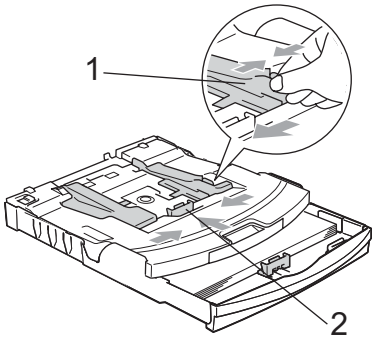

3. Put the photo paper into the photo paper tray and gently adjust the paper side guides to the paper.
   Make sure the paper side guides touch the sides of the paper.

Note

- Be careful that you do not push the paper in too far; it may lift at the back of the tray and cause feed problems.
- Always make sure that the paper is not curled.

4. When you have finished printing photos return the photo paper tray to the normal printing position.
   Press the photo paper tray release button with your left thumb and pull the photo paper tray forward until it clicks.

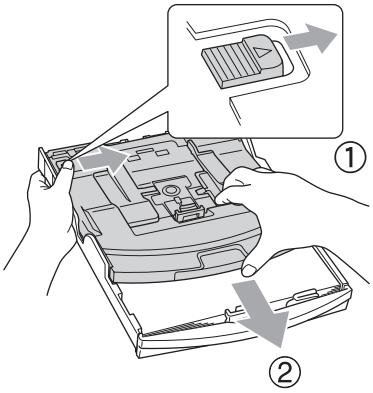

Removing small printouts from the machine

When the machine ejects small paper onto the output paper tray you may not be able to reach it. Make sure printing has finished, and then pull the tray completely out of the machine.

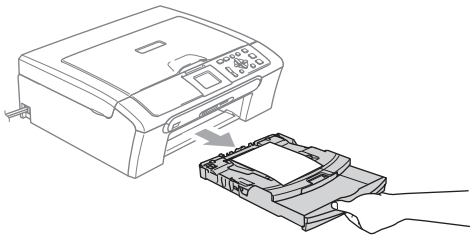

Printable area

The printable area depends on the settings in the application you are using. The figures below show the unprintable areas on cut sheet paper and envelopes. The machine can only print in the shaded areas when the Borderless print feature is available and turned on.

Cut Sheet Paper

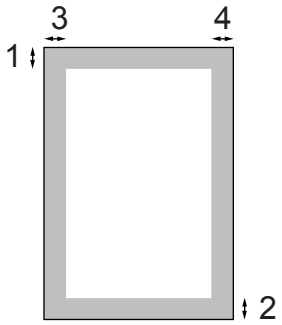

Envelopes

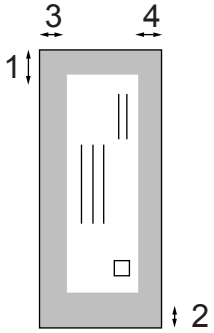

	Top (1)	Bottom (2)	Left (3)	Right (4)
Cut Sheet	3 mm	3 mm	3 mm	3 mm
Envelopes	12 mm	24 mm	3 mm	3 mm

Note

The Borderless feature is not available for envelopes.

3 General setup

Paper settings

Paper Type

To get the best print quality, set the machine for the type of paper you are using.

1. Press **Menu**.
2. Press ▲ or ▼ to choose `General Setup`.
   Press **OK**.
3. Press ▲ or ▼ to choose `Paper Type`.
   Press **OK**.
4. Press ▲ or ▼ to choose `Plain Paper`, `Inkjet Paper`, `Brother Photo`, `Other Photo` or `Transparency`.
   Press **OK**.
5. Press **Stop/Exit**.

Note

The machine ejects paper with printed surfaces face up onto the paper tray in front of the machine. When you use transparencies or glossy paper, remove each sheet at once to prevent smudging or paper jams.

Paper Size

You can use five sizes of paper for printing copies: Letter, Legal, A4, A5, and 10 × 15 cm. When you change the size of paper you load in the machine, you will need to change the paper size setting at the same time.

1. Press **Menu**.
2. Press ▲ or ▼ to choose `General Setup`.
   Press **OK**.
3. Press ▲ or ▼ to choose `Paper Size`.
   Press **OK**.
4. Press ▲ or ▼ to choose `Letter`, `Legal`, `A4`, `A5` or `10x15cm`.
   Press **OK**.
5. Press **Stop/Exit**.

LCD display

LCD Contrast

You can adjust the LCD contrast for a sharper and more vivid display. If you are having difficulty reading the LCD, try changing the contrast setting.

1. Press **Menu**.
2. Press ▲ or ▼ to choose `General Setup`.
   Press **OK**.
3. Press ▲ or ▼ to choose `LCD Settings`.
   Press **OK**.
4. Press ▲ or ▼ to choose `LCD Contrast`.
   Press **OK**.
5. Press ▲ or ▼ to choose `Light`, `Med` or `Dark`.
   Press **OK**.
6. Press **Stop/Exit**.

Setting the backlight brightness

If you are having difficulty reading the LCD, try changing the brightness setting.

1. Press **Menu**.
2. Press ▲ or ▼ to choose `General Setup`.
   Press **OK**.
3. Press ▲ or ▼ to choose `LCD Settings`.
   Press **OK**.
4. Press ▲ or ▼ to choose `Backlight`.
   Press **OK**.
5. Press ▲ or ▼ to choose `Light` or `Dark`.
   Press **OK**.
6. Press **Stop/Exit**.

Setting the Dim Timer for the backlight

You can set how long the LCD backlight stays on after the last key press.

1. Press **Menu**.
2. Press ▲ or ▼ to choose `General Setup`.
   Press **OK**.
3. Press ▲ or ▼ to choose `LCD Settings`.
   Press **OK**.
4. Press ▲ or ▼ to choose `Dim Timer`.
   Press **OK**.
5. Press ▲ or ▼ to choose `10 Secs`, `20 Secs`, `30 Secs` or `Off`.
   Press **OK**.
6. Press **Stop/Exit**.

Setting the Off Timer

You can set how long the LCD stays on after the last key press. This is a power saving feature. The machine can print and scan from your computer when the LCD is off.

1. Press **Menu**.
2. Press ▲ or ▼ to choose `General Setup`.
   Press **OK**.
3. Press ▲ or ▼ to choose `LCD Settings`.
   Press **OK**.
4. Press ▲ or ▼ to choose `Off Timer`.
   Press **OK**.
5. Press ▲ or ▼ to choose `1 Min`, `2 Mins`, `3 Mins`, `5 Mins`, `10 Mins`, `30 Mins` or `Off`.
   Press **OK**.
6. Press **Stop/Exit**.

Note

When the display is off you can press any key to turn it back on.

Section II

Copy

Making copies 28

4 Making copies

How to copy

Making a single copy

1. Load your document.
   (See *Loading documents* on page 10.)
2. Press **Mono Start** for B&W copy or **Colour Start** for Colour copy.

Making multiple copies

You can make up to 99 copies.

1. Load your document.
   (See *Loading documents* on page 10.)
2. Press **+** or **-** repeatedly until the number of copies you want appears (up to 99).
3. Press **Mono Start** or **Colour Start**.

Note

To sort the copies, press ▲ or ▼ to choose `Stack/Sort`. (See *Sorting copies using the ADF (DCP-560CN only)* on page 31.)

Stop copying

To stop copying, press **Stop/Exit**.

Copy options

You can change the copy settings from the default display. The LCD shows:

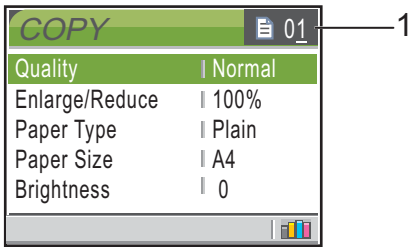

1 No of Copies
You can enter the number of copies you want by pressing **+** or **-** repeatedly.

Press ▲ or ▼ to scroll through the copy options menu.

- `Quality` (See page 29.)
- `Enlarge/Reduce` (See page 29.)
- `Paper Type` (See page 32.)
- `Paper Size` (See page 32.)
- `Brightness` (See page 31.)
- `Contrast` (See page 31.)
- `Color Adjust` (See page 31.)
- `Stack/Sort` (DCP-560CN only) (See page 31.)
- `Page Layout` (See page 30.)
- `Set New Default` (See page 32.)
- `Factory Reset` (See page 32.)

When the option you want is highlighted, press **OK**.

You can change the copy settings temporarily for the next copy.

The machine returns to its default settings after 1 minute.

If you have finished choosing settings, press **Mono Start** or **Colour Start**.

If you want to choose more settings, press ▲ or ▼.

Note

You can save some of the settings that you use most often by setting them as default. These settings will stay until you change them again. (See *Setting your changes as a new default* on page 32.)

Changing copy speed and quality

You can choose the copy quality. The factory setting is Normal.

Fast	Fast copy speed and lowest amount of ink used. Use this setting to save time (documents to be proof read, large documents or many copies).
Normal	Recommended setting for ordinary print outs. Good copy quality with adequate copy speed.
Best	Use this setting to copy precise images such as photographs. The highest resolution and slowest speed.

1. Load your document.
2. Enter the number of copies you want.
3. Press ▲ or ▼ to choose Quality.
   Press **OK**.
4. Press ▲ or ▼ to choose Fast, Normal or Best.
   Press **OK**.
5. If you do not want to change additional settings, press **Mono Start** or **Colour Start**.

Enlarging or reducing the image copied

You can choose an enlargement or reduction ratio.

1. Load your document.
2. Enter the number of copies you want.
3. Press ▲ or ▼ to choose Enlarge/Reduce.
   Press **OK**.

50%
69% A4→A5
78% (DCP-350C)
78% LGL→LTR (DCP-560CN)
83% (DCP-350C)
83% LGL→A4 (DCP-560CN)
93% A4→LTR
97% LTR→A4
100%*
104% EXE→LTR
142% A5→A4
186% 10x15cm→LTR
198% 10x15cm→A4
200%
Custom(25-400%)

4. Do one of the following.
   - Press ▲ or ▼ to choose the enlargement or reduction ratio you want. Press **OK**.
   - Press ▲ or ▼ to choose Custom(25-400%). Press **+** or **-** to enter an enlargement or reduction ratio from 25% to 400%. Press **OK**.
5. If you do not want to change additional settings, press **Mono Start** or **Colour Start**.

Note

Page Layout Options are not available with Enlarge/Reduce settings.

Making N in 1 copies or a poster (page layout)

The N in 1 copy feature can help you save paper by letting you copy two or four pages onto one printed page.

You can also make a poster. When you use the poster feature your machine divides your document into sections, then enlarges the sections so you can assemble them into a poster. If you want to print a poster, use the scanner glass.

Important

- Please make sure paper size is set to `Letter`, `Legal`, or `A4`.
- You cannot use the `Enlarge/Reduce` setting with the N in 1 and Poster features.
- If you are producing multiple colour copies, N in 1 copy is not available.
- (`P`) means Portrait and (`L`) means Landscape.
- You can only make one poster copy at a time.

1. Load your document.
2. Enter the number of copies you want.
3. Press ▲ or ▼ to choose `Page Layout`. Press **OK**.
4. Press ▲ or ▼ to choose `Off(1in1)`, `2in1 (P)`, `2in1 (L)`, `4in1 (P)`, `4in1 (L)` or `Poster(3x3)`. Press **OK**.
5. If you do not want to change additional settings, press **Mono Start** or **Colour Start** to scan the page. If you are making a poster or placed the document in the ADF, the machine scans the pages and starts printing. **If you are using the scanner glass, go to ❻.**
6. After the machine scans the page, press **+** (`Yes`) to scan the next page.
7. Put the next page on the scanner glass. Press **OK**. Repeat ❻ and ❼ for each page of the layout.
8. After all the pages have been scanned, press **-** (`No`) to finish.

Place your document face down in the direction shown below.

- **2 in 1 (P)**

- **2 in 1 (L)**

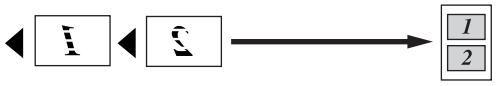

- **4 in 1 (P)**

- **4 in 1 (L)**

- **Poster (3 x 3)**

  You can make a poster size copy of a photograph.

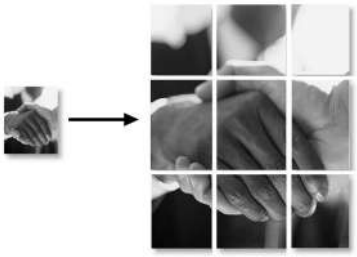

Sorting copies using the ADF (DCP-560CN only)

You can sort multiple copies. Pages will be sorted in reverse order.

1. Load your document.
2. Enter the number of copies you want.
3. Press ▲ or ▼ to choose `Stack/Sort`.
   Press **OK**.
4. Press ▲ or ▼ to choose `Sort`.
   Press **OK**.
5. If you do not want to change additional settings, press **Mono Start** or **Colour Start**.

Note

`Page Layout` options are not available with `Sort` settings.

Adjusting Brightness, Contrast and Colour

Brightness

You can adjust the copy brightness to make copies darker or lighter.

1. Load your document.
2. Enter the number of copies you want.
3. Press ▲ or ▼ to choose `Brightness`.
   Press **OK**.
4. Press ▲ to or ▼ to make a lighter or darker copy.
   Press **OK**.
5. If you do not want to change additional settings, press **Mono Start** or **Colour Start**.

Contrast

You can adjust the copy contrast to help an image look sharper and more vivid.

1. Load your document.
2. Enter the number of copies you want.
3. Press ▲ or ▼ to choose `Contrast`.
   Press **OK**.
4. Press ▲ or ▼ to increase or decrease the contrast.
   Press **OK**.
5. If you do not want to change additional settings, press **Mono Start** or **Colour Start**.

Colour Saturation

1. Load your document.
2. Enter the number of copies you want.
3. Press ▲ or ▼ to choose `Color Adjust`.
   Press **OK**.
4. Press ▲ or ▼ to choose `Red`, `Green` or `Blue`.
   Press **OK**.
5. Press ▲ or ▼ to change the colour saturation.
   Press **OK**.
6. Do one of the following:
   - If you want to change saturation for another colour, go to step ❹.
   - If you want to change additional settings, press ▲ or ▼ to choose `Exit`.

     Press **OK**.
   - If you do not want to change additional settings, press **Mono Start** or **Colour Start**.

Paper options

Paper Type

If you are copying on special paper, set the machine for the type of paper you are using to get the best print quality.

1. Load your document.
2. Enter the number of copies you want.
3. Press ▲ or ▼ to choose `Paper Type`.
   Press **OK**.
4. Press ▲ or ▼ to choose `Plain Paper`, `Inkjet Paper`, `Brother Photo`, `Other Photo` or `Transparency`.
   Press **OK**.
5. If you do not want to change additional settings, press **Mono Start** or **Colour Start**.

Paper Size

If copying on paper other than A4 size, you will need to change the paper size setting.

You can copy only on Letter, Legal, A4, A5 or Photo Card [10 cm (W) × 15 cm (H)] paper.

1. Load your document.
2. Enter the number of copies you want.
3. Press ▲ or ▼ to choose `Paper Size`.
   Press **OK**.
4. Press ▲ or ▼ to choose `Letter`, `Legal`, `A4`, `A5` or `10x15cm`.
   Press **OK**.
5. If you do not want to change additional settings, press **Mono Start** or **Colour Start**.

Setting your changes as a new default

You can save the copy settings for `Quality`, `Paper Type`, `Brightness`, `Contrast` and `Color Adjust` that you use most often by setting them as the default settings. These settings will stay until you change them again.

1. Press ▲ or ▼ to choose your new setting.
   Press **OK**.
   Repeat this step for each setting you want to change.
2. After changing the last setting, press ▲ or ▼ to choose `Set New Default`.
   Press **OK**.
3. Press **+** to choose `Yes`.
4. Press **Stop/Exit**.

Restoring all settings to the factory settings

You can restore all the settings you have changed to the factory settings. These settings will stay until you change them again.

1. Press ▲ or ▼ to choose `Factory Reset`.
   Press **OK**.
2. Press **+** to choose `Yes`.
3. Press **Stop/Exit**.

Section III

Direct Photo Printing

Printing photos from a memory card or USB Flash memory drive 34

Printing photos from a camera 50

5 Printing photos from a memory card or USB Flash memory drive

PhotoCapture Center™ Operations

Printing from a memory card or USB Flash memory drive without a PC

Even if your machine is not connected to your computer, you can print photos directly from digital camera media or a USB Flash memory drive. (See *Print Images* on page 37.)

Scanning to a memory card or USB Flash memory drive without a PC

You can scan documents and save them directly to a memory card or USB Flash memory drive. (See *Scan to a memory card or USB Flash memory drive* on page 48.)

Using PhotoCapture Center™ from your computer

You can access a memory card or USB Flash memory drive that is inserted in the front of the machine from your PC.

(See *PhotoCapture Center*™ for Windows® or *Remote Setup & PhotoCapture Center*™ for Macintosh® in the Software User's Guide on the CD-ROM.)

Using a memory card or USB Flash memory drive

Your Brother machine has media drives (slots) for use with popular digital camera media: CompactFlash®, Memory Stick®, Memory Stick Pro™, SecureDigital, MultiMediaCard™, xD-Picture Card™ and USB Flash memory drives.

CompactFlash®

Memory Stick®
Memory Stick Pro™

SecureDigital
MultiMediaCard™

xD-Picture Card™

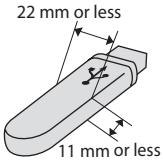

USB Flash memory drive

- miniSD™ can be used with a miniSD™ adapter.
- Memory Stick Duo™ can be used with a Memory Stick Duo™ adapter.
- Memory Stick Pro Duo™ can be used with a Memory Stick Pro Duo™ adapter.
- Adapters are not included with the machine. Contact a third party supplier for adapters.

The PhotoCapture Center™ feature lets you print digital photos from your digital camera at high resolution to get photo quality printing.

Memory cards or a USB Flash memory drive folder structure

Your machine is designed to be compatible with modern digital camera image files and memory cards; however, please read the points below to avoid errors:

- The image file extension must be .JPG. (Other image file extensions like .JPEG, .TIF, .GIF and so on will not be recognized.)
- PhotoCapture Center™ printing must be performed separately from PhotoCapture Center™ operations using the PC. (Simultaneous operation is not available.)
- IBM Microdrive™ is not compatible with the machine.
- The machine can read up to 999 files on a memory card or USB Flash memory drive.
- CompactFlash® Type II is not supported.
- This product supports xD-Picture Card™ Type M / Type H.
- The DPOF file on the memory cards must be in a valid DPOF format. (See *DPOF printing* on page 43.)

Please be aware of the following:

- When printing the INDEX or IMAGE, the PhotoCapture Center™ will print all the valid images, even if one or more images have been corrupted. The corrupted image will not be printed.
- (memory card users)

  Your machine is designed to read memory cards that have been formatted by a digital camera.

  When a digital camera formats a memory card it creates a special folder into which it copies image data. If you need to modify the image data stored on a memory card with your PC, we recommend that you do not modify the folder structure created by the digital camera. When saving new or modified image files to the memory card we also recommend you use the same folder your digital camera uses. If the data is not saved to the same folder, the machine may not be able to read the file or print the image.
- (USB Flash memory drive users)

  This machine supports USB Flash memory drives that has been formatted by Windows®.

Getting started

Firmly put a memory card or USB Flash memory drive into the correct slot.

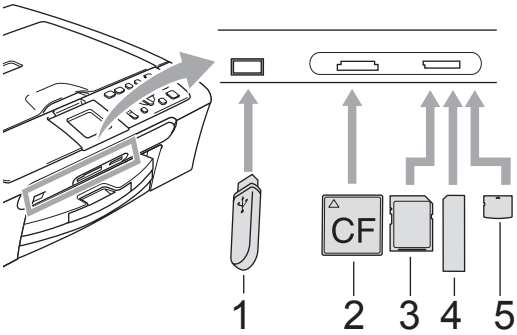

1 **USB Flash memory drive**

2 **CompactFlash®**

3 **SecureDigital, MultiMediaCard™**

4 **Memory Stick®, Memory Stick Pro™**

5 **xD-Picture Card™**

CAUTION

The USB direct interface supports only a USB Flash memory drive, a PictBridge compatible camera, or a digital camera that uses the USB mass storage standard. Any other USB devices are not supported.

PhotoCapture key indications:

- **PhotoCapture** light is on, the memory card or USB Flash memory drive is properly inserted.
- **PhotoCapture** light is off, the memory card or USB Flash memory drive is not properly inserted.
- **PhotoCapture** light is blinking, the memory card or USB Flash memory drive is being read or written to.

CAUTION

DO NOT unplug the power cord or remove the memory card or USB Flash memory drive from the media drive (slot) or USB direct interface while the machine is reading or writing to the memory card or USB Flash memory drive (the **PhotoCapture** key is blinking). **You will lose your data or damage the card.**

The machine can only read one device at a time so do not put more than one device in the slot.

Entering PhotoCapture mode

After you insert the memory card or USB Flash memory drive, press the (**PhotoCapture**) key to illuminate it in green and display the PhotoCapture options on the LCD.

The LCD shows:

Press ▲ or ▼ to scroll through the PhotoCapture key options.

- `View Photo(s)` (See page 37.)
- `Print Index` (See page 37.)
- `Print Photos` (See page 38.)
- `Photo Effects` (See page 39.)
- `Search by Date` (See page 41.)
- `Print All Photos` (See page 42.)
- `Slide show` (See page 42.)
- `Trimming` (See page 43.)

Note

If your digital camera supports DPOF printing, see *DPOF printing* on page 43.

When the option you want is highlighted, press **OK**.

Print Images

View Photo(s)

You can preview your photos on the LCD before you print them. If your photos are large files there may be a delay before each photo is displayed on the LCD.

1. Make sure you have put a memory card or USB Flash memory drive in the correct slot.
   Press (**PhotoCapture**).
2. Press ▲ or ▼ to choose `View Photo(s)`.
   Press **OK**.
3. Press ◀ or ▶ to choose your photo.
4. Press **+** or **-** repeatedly to enter the number of copies you want.
5. Repeat step ❸ and step ❹ until you have chosen all the photos.
6. After you have chosen all the photos, do one of the following:
   - Press **OK** and change the print settings. (See page 44.)
   - If you do not want to change any settings, press **Colour Start** to print.

Print Index (Thumbnails)

The PhotoCapture Center™ assigns numbers for images (such as No.1, No.2, No.3, and so on).

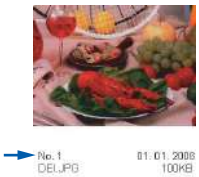

The PhotoCapture Center™ uses these numbers to identify each picture. You can print a thumbnail page (Index page with 5 images per line). This will show all the pictures on the memory card or USB Flash memory drive.

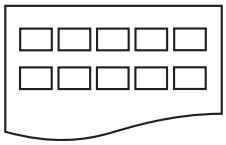

Note

Only file names that are 8 characters or less will be printed correctly on the index sheet.

1. Make sure you have put the memory card or USB Flash memory drive in the correct slot.

   Press (**PhotoCapture**).

2. Press ▲ or ▼ to choose `Print Index`. Press **OK**.

3. Press ▲ or ▼ to choose the paper settings, `Paper Type` or `Paper Size`. Do one of the following.

   - If you chose Paper Type, press **OK** and press ▲ or ▼ to choose the type of paper you are using, `Plain Paper`, `Inkjet Paper`, `Brother Photo` or `Other Photo`.

     Press **OK**.

   - If you chose Paper Size, press **OK** and press ▲ or ▼ to choose the paper size you are using, `Letter` or `A4`.

     Press **OK**.

   - If you do not want to change the paper settings, go to ❹

4. Press **Colour Start** to print.

Print Photos

Before you can print an individual image, you have to know the image number.

1. Make sure you have put a memory card or USB Flash memory drive in the correct slot.

   Press (**PhotoCapture**).

2. Print the Index. (See *Print Index (Thumbnails)* on page 37.)

3. Press ▲ or ▼ to choose `Print Photos`. Press **OK**.

4. Press ▲ repeatedly to choose the image number that you want to print from the Index page (Thumbnails).
   If you want to choose a two digit number, press ▶ to move the cursor to the next digit. (For example, enter 1, ▶, 6 to print image No.16.)
   Press **OK**.

Note

Press ▼ to decrease the image number.

5. Repeat step ❹ until you have entered all the image numbers that you want to print. (For example, enter **1**, **OK**, **3**, **OK**, **6**, **OK** to print images No.1, No.3 and No.6.)

Note

You can enter up to 12 characters (including commas) for the image numbers you want to print.

6. After you have chosen all the image numbers, press **OK** again.

7. Press **+** or **-** repeatedly to enter the number of copies you want.

8. Do one of the following:

   - Change the print settings. (See page 44.)

   - If you do not want to change any settings, press **Colour Start** to print.

Photo Effects

You can edit and add effects to your photos and view them on the LCD before printing.

Note

- After adding each effect, you can enlarge the view of the image by pressing **Ink Management**. To go back to the original size, press **Ink Management** again.
- The Photo Effects feature is supported by technology from Reallusion, Inc.

Auto Correct

Auto Correct is available for most photos. The machine decides the suitable effect for your photo.

1. Make sure you have put a memory card or USB Flash memory drive in the correct slot.
   Press (**PhotoCapture**).
2. Press ▲ or ▼ to choose `Photo Effects`.
   Press **OK**.
3. Press ◀ or ▶ to choose your photo.
   Press **OK**.
4. Press ▲ or ▼ to choose `Auto Correct`.
   Press **OK**.
5. Press **+** or **-** repeatedly to enter the number of copies you want.
6. Do one of the following.
   - Press **OK** and change the print settings. (See page 44.)
   - If you do not want to change any settings, press **Colour Start** to print.

Note

If `Remove Red-Eye` appears on the LCD, press ▲ to remove red-eye from your photo.

Enhance Skin-Tone

Enhance Skin-Tone is best used for adjusting portrait photographs. It detects human skin colour in your photos and adjusts the image.

1. Make sure you have put a memory card or USB Flash memory drive in the correct slot.
   Press (**PhotoCapture**).
2. Press ▲ or ▼ to choose `Photo Effects`.
   Press **OK**.
3. Press ◀ or ▶ to choose your photo.
   Press **OK**.
4. Press ▲ or ▼ to choose `Enhance Skin-Tone`.
   Press **OK**.
5. Do one of the following.
   - Press **OK** if you do not want to change any settings.
   - Press ▲ or ▼ to adjust the effect level manually. Press **OK** when you have finished.
6. Press **+** or **-** repeatedly to enter the number of copies you want.
7. Do one of the following.
   - Press **OK** and change the print settings. (See page 44.)
   - If you do not want to change any settings, press **Colour Start** to print.

Enhance Scenery

Enhance Scenery is best used for adjusting landscape photographs. It highlights green and blue areas in your photo, so that the landscape looks more sharp and vivid.

1. Make sure you have put the memory card or USB Flash memory drive in the correct slot.

   Press (**PhotoCapture**).

2. Press ▲ or ▼ to choose `Photo Effects`.
   Press **OK**.

3. Press ◀ or ▶ to choose your photo.
   Press **OK**.

4. Press ▲ or ▼ to choose `Enhance Scenery`.
   Press **OK**.

5. Do one of the following.
   - Press **OK** if you do not want to change any settings.
   - Press ▲ or ▼ to adjust the effect level manually. Press **OK** when you have finished.

6. Press **+** or **-** repeatedly to enter the number of copies you want.

7. Do one of the following.
   - Press **OK** and change the print settings. (See page 44.)
   - If you do not want to change any settings, press **Colour Start** to print.

Remove Red-Eye

The machine detects eyes in your photos and will remove red-eye from your photo.

Note

There are some cases when red-eye may not be removed.

- When the face is too small.
- When the face is turning too far up, down, left or right.

1. Make sure you have put a memory card or USB Flash memory drive in the correct slot.

   Press (**PhotoCapture**).

2. Press ▲ or ▼ to choose `Photo Effects`.
   Press **OK**.

3. Press ◀ or ▶ to choose your photo.
   Press **OK**.

4. Press ▲ or ▼ to choose `Remove Red-Eye`.
   Press **OK**.
   - When `Remove Red-Eye` is successful, the photo after effect is shown. The adjusted part is shown in a red frame.
   - When `Remove Red-Eye` is unsuccessful, `Unable to Detect.` is shown.

Note

Press ▲ to try `Remove Red-Eye` again.

- When `Remove Red-Eye` is successful, the photo after effect is shown. The adjusted part is shown in a red frame.
- When `Remove Red-Eye` is unsuccessful, `Unable to Detect.` is shown.

5. Press **+** or **-** repeatedly to enter the number of copies you want.

6. Do one of the following.
   - Press **OK** and change the print settings. (See page 44.)
   - If you do not want to change any settings, press **Colour Start** to print.

Monochrome

You can convert your photo to monochrome.

1. Make sure you have put a memory card or USB Flash memory drive in the correct slot.

   Press (**PhotoCapture**).

2. Press ▲ or ▼ to choose `Photo Effects`. Press **OK**.

3. Press ◀ or ▶ to choose your photo. Press **OK**.

4. Press ▲ or ▼ to choose `Monochrome`. Press **OK**.

5. Press **+** or **-** repeatedly to enter the number of copies you want.

6. Do one of the following.

   - Press **OK** and change the print settings. (See page 44.)
   - If you do not want to change any settings, press **Colour Start** to print.

Sepia

You can convert the colour of your photo to sepia.

1. Make sure you have put a memory card or USB Flash memory drive in the correct slot.

   Press (**PhotoCapture**).

2. Press ▲ or ▼ to choose `Photo Effects`. Press **OK**.

3. Press ◀ or ▶ to choose your photo. Press **OK**.

4. Press ▲ or ▼ to choose `Sepia`. Press **OK**.

5. Press **+** or **-** repeatedly to enter the number of copies you want.

6. Do one of the following.

   - Press **OK** and change the print settings. (See page 44.)
   - If you do not want to change any settings, press **Colour Start** to print.

Search by Date

You can find your photos based on date.

1. Make sure you have put a memory card or USB Flash memory drive in the correct slot.

   Press (**PhotoCapture**).

2. Press ▲ or ▼ to choose `Search by Date`. Press **OK**.

3. Press ▲ or ▼ to choose the date that you want to search from. Press **OK**.

4. Press ◀ or ▶ to choose your photo.

Note

You can view photos with other dates by pressing ◀ or ▶ continuously. Press ◀ to view an older photo and ▶ to view a newer photo.

5. Press **+** or **-** repeatedly to enter the number of copies you want.

6. Repeat step ❹ and step ❺ until you have chosen all your photos.

7. After you have chosen all your photos, do one of the following:

   - Press **OK** and change the print settings. (See page 44.)
   - If you do not want to change any settings, press **Colour Start** to print.

Print All Photos

You can print all the photos on your memory card.

1. Make sure you have put a memory card or USB Flash memory drive in the correct slot.

   Press (**PhotoCapture**).

2. Press ▲ or ▼ to choose `Print All Photos`.
   Press **OK**.

3. Press **+** or **-** repeatedly to enter the number of copies you want.

4. Do one of the following:
   - Change the print settings. (See page 44.)
   - If you do not want to change any settings, press **Colour Start** to print.

Slide show

You can view all your photos on the LCD using Slide show. You can also choose a photo during the operation.

1. Make sure you have put a memory card or USB Flash memory drive in the correct slot.

   Press (**PhotoCapture**).

2. Press ▲ or ▼ to choose `Slide show`.
   Press **OK**.

3. Press **Stop/Exit** to finish Slide show.

Printing a photo during a Slide show

1. Press **OK** to stop at one image while Slide show is operating.

2. Press **+** or **-** repeatedly to enter the number of copies you want.

3. Do one of the following:
   - Press **OK** and change the print settings. (See page 44.)
   - If you do not want to change any settings, press **Colour Start** to print.

Trimming

You can trim your photo and print a part of the image.

Note

If your photo is very small or of irregular proportions you may not be able to trim the photo. The LCD will display `Image Too Small`.or `Image Too Long`..

1. Make sure you have put a memory card or USB Flash memory drive in the correct slot.

   Press (**PhotoCapture**).

2. Press ▲ or ▼ to choose `Trimming`. Press **OK**.

3. Press ◀ or ▶ to choose your photo. Press **OK**.

4. Adjust the red frame on your photo. The part inside of the red frame will be printed.
   - Press **+** or **-** to enlarge or reduce the frame size.
   - Press each arrow key to move the position of the frame.
   - Press **Ink Management** to rotate the frame.
   - Press **OK** when you have finished the frame setting.

5. Press **+** or **-** repeatedly to enter the number of copies you want.

6. Do one of the following:
   - Press **OK** and change the print settings. (See page 44.)
   - If you do not want to change any settings, press **Colour Start** to print.

DPOF printing

DPOF stands for Digital Print Order Format.

Major digital camera manufacturers (Canon Inc., Eastman Kodak Company, Fuji Photo Film Co. Ltd., Matsushita Electric Industrial Co. Ltd. and Sony Corporation) created this standard to make it easier to print images from a digital camera.

If your digital camera supports DPOF printing, you will be able to choose on the digital camera display the images and number of copies you want to print.

When the memory card (CompactFlash®, Memory Stick®, Memory Stick Pro™, SecureDigital MultiMediaCard™ or xD-Picture Card™) with DPOF information is put into your machine, you can print the chosen image easily.

1. Make sure you have put a memory card in the correct slot.

   Press (**PhotoCapture**). The machine will ask you if you want to use DPOF setting.

2. Press **+** to choose `Yes`.

3. Do one of the following:
   - Change the print settings. (See page 44.)
   - If you do not want to change any settings, press **Colour Start** to print.

Note

An invalid DPOF File error can occur if the print order that was created on the camera has been corrupted. Delete and recreate the print order using your camera to correct this problem.

For instructions on how to delete or recreate the print order, refer to your camera manufacturer's support website or accompanying documentation.

PhotoCapture Center™ print settings

You can change the print settings temporarily for the next print.

The machine returns to its default settings after 3 minutes.

Note

You can save the print settings you use most often by setting them as default.
(See *Setting your changes as a new default* on page 47.)

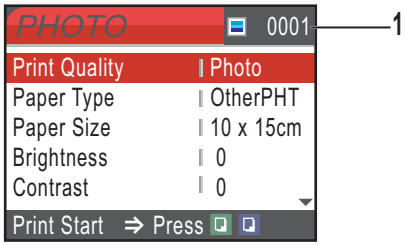

1 No. of prints

(For View Photo(s), Search by Date, Slide Show)
You can see the total number of photos that will be printed.
(For Print All Photos, Print Photos, Photo Effects, Trimming)
You can see the number of copies of each photo that will be printed.
(For DPOF printing) This does not appear.

Menu Selections	Options 1	Options 2	Page
Print Quality (Does not appear for DPOF printing.)	Normal/Photo		45
Paper Type	Plain Paper/Inkjet Paper/ Brother Photo/Other Photo		45
Paper Size	Letter/A4/10x15cm/13x18cm	(When A4 or Letter is chosen) 10 x 8cm 13 x 9cm 15 x 10cm 18 x 13cm 20 x 15cm Max. Size	45
Brightness (Does not appear when Photo Effects is chosen.)	Light 0 Dark		46

Menu Selections	Options 1	Options 2	Page
Contrast (Does not appear when Photo Effects is chosen.)	- + - 0 - - -		46
Color Enhance (Does not appear when Photo Effects is chosen.)	On/Off White Balance / Sharpness / Color Density / Exit	- + - 0 - - -	46
Cropping	On/Off		47
Borderless	On/Off		47
Set New Default	Yes/No		47
Factory Reset	Yes/No		47

5

Print Speed and Quality

1. Press ▲ or ▼ to choose Print Quality.
   Press **OK**.
2. Press ▲ or ▼ to choose Normal or Photo.
   Press **OK**.
3. If you do not want to change additional settings, press **Colour Start** to print.

Paper options

Paper Type

1. Press ▲ or ▼ to choose Paper Type.
   Press **OK**.
2. Press ▲ or ▼ to choose the type of paper you are using, Plain Paper, Inkjet Paper, Brother Photo or Other Photo.
   Press **OK**.
3. If you do not want to change additional settings, press **Colour Start** to print.

Paper and print size

1. Press ▲ or ▼ to choose Paper Size.
   Press **OK**.
2. Press ▲ or ▼ to choose the paper size you are using, Letter, 10x15cm, 13x18cm or A4.
   Press **OK**.
3. If you chose Letter or A4, press ▲ or ▼ to choose the print size.
   Press **OK**.

Example: Printed Position for A4 paper

1 10 x 8cm	2 13 x 9cm	3 15 x 10cm
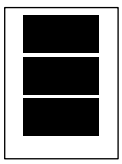	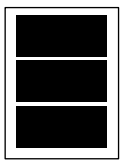	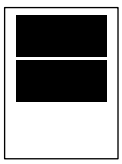
4 18 x 13cm	5 20 x 15cm	6 Max. Size
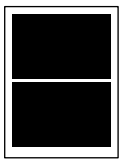	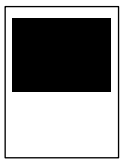	

4. If you do not want to change additional settings, press **Colour Start** to print.

Adjusting Brightness, Contrast and Colour

Brightness

1. Press ▲ or ▼ to choose `Brightness`.
   Press **OK**.
2. Press ▲ to make a lighter print or press ▼ to make a darker print.
   Press **OK**.
3. If you do not want to change additional settings, press **Colour Start** to print.

Contrast

You can choose the contrast setting. More contrast will make an image look sharper and more vivid.

1. Press ▲ or ▼ to choose `Contrast`.
   Press **OK**.
2. Press ▲ to increase the contrast or press ▼ to decrease the contrast.
   Press **OK**.
3. If you do not want to change additional settings, press **Colour Start** to print.

Colour Enhancement

You can turn on the colour enhancement feature to print more vivid images. Printing time will be slower.

1. Press ▲ or ▼ to choose `Color Enhance`.
   Press **OK**.
2. Do one of the following:
   - If you want to customize the White Balance, Sharpness or Colour Density, press ◀ or ▶ to choose `On`, and then go to step ❸.
   - If you do not want to customize, press ◀ or ▶ to choose `Off`.

     Press **OK** and then go to step ❻.
3. Press ▲ or ▼ to choose `White Balance`, `Sharpness` or `Color Density`.
   Press **OK**.
4. Press ▲ or ▼ to adjust the degree of the setting.
   Press **OK**.
5. Do one of the following:
   - If you want to customize another colour enhancement, press ▲ or ▼ to choose another option.
   - If you want to change other settings, press ▲ or ▼ to choose `Exit`, and then press **OK**.
6. If you do not want to change additional settings, press **Colour Start** to print.

Note

- **White Balance**

  This setting adjusts the hue of the white areas of an image. Lighting, camera settings and other influences will effect the appearance of white. The white areas of a picture may be slightly pink, yellow or some other colour. By using this setting, you can correct that effect and bring the white areas back to pure white.
- **Sharpness**

  This setting enhances the detail of an image, similar to adjusting the fine focus on a camera. If the image is not in true focus and you cannot see the fine details of the picture, then adjust the sharpness.
- **Colour Density**

  This setting adjusts the total amount of colour in the image. You can increase or decrease the amount of colour in an image to improve a washed out or weak picture.

Cropping

If your photo is too long or wide to fit the available space on your chosen layout, part of the image will automatically be cropped.

The factory setting is `On`. If you want to print the whole image, turn this setting to `Off`.

1. Press ▲ or ▼ to choose `Cropping`. Press **OK**.
2. Press ▲ or ▼ to choose `Off` (or `On`). Press **OK**.
3. If you do not want to change additional settings, press **Colour Start** to print.

Cropping: On

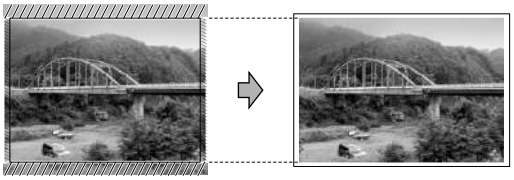

Cropping: Off

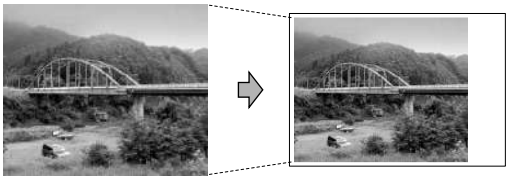

Borderless printing

This feature expands the printable area to the edges of the paper. Printing time will be slightly slower.

1. Press ▲ or ▼ to choose `Borderless`. Press **OK**.
2. Press ▲ or ▼ to choose `Off` (or `On`). Press **OK**.
3. If you do not want to change additional settings, press **Colour Start** to print.

Setting your changes as a new default

You can save the print settings you use most often by setting them as the default settings. These settings will stay until you change them again.

1. Press ▲ or ▼ to choose your new setting. Press **OK**.
   Repeat this step for each setting you want to change.
2. After changing the last setting, press ▲ or ▼ to choose `Set New Default`. Press **OK**.
3. Press **+** to choose `Yes`.
4. Press **Stop/Exit**.

Restoring all settings to the factory settings

You can restore all the settings you have changed to the factory settings. These settings will stay until you change them again.

1. Press ▲ or ▼ to choose `Factory Reset`. Press **OK**.
2. Press **+** to choose `Yes`.
3. Press **Stop/Exit**.

Scan to a memory card or USB Flash memory drive

Entering Scan mode

When you want to scan to a memory card or USB Flash memory drive, press

(**Scan**).

The LCD shows:

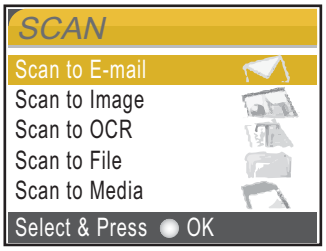

Press ▲ or ▼ to choose `Scan to Media`.

Press **OK**.

If you are not connected to your computer only the Scan to Media selection will appear on the LCD.

(See *Scanning* for Windows® or Macintosh® in the Software User's Guide on the CD-ROM for details about the other menu options.)

How to scan to a memory card or USB Flash memory drive

You can scan monochrome and colour documents into a memory card or USB Flash memory drive. Monochrome documents will be stored in PDF (*.PDF) or TIFF (*.TIF) file formats. Colour documents may be stored in PDF (*.PDF) or JPEG (*.JPG) file formats. The factory setting is `150dpi Color` and the default file format is PDF. The machine automatically creates file names based on the current date.(For details, see Quick Setup Guide.) For example, the fifth image scanned on June 1, 2007 would be named 01060705.PDF. You can change the colour and quality.

Quality	Selectable File Format
150dpi Color	JPEG / PDF
300dpi Color	JPEG / PDF
600dpi Color	JPEG / PDF
200x100dpi B/W	TIFF / PDF
200dpi B/W	TIFF / PDF

1. Insert a CompactFlash®, Memory Stick®, Memory Stick Pro™, SecureDigital, MultiMediaCard™, xD-Picture Card™ or USB Flash memory drive into your machine.

WARNING

Do not take out the memory card while **PhotoCapture** is blinking to avoid damaging the card, USB Flash memory drive, or data stored on the device that you are using.

2. Load your document.

3. Press (**Scan**).

4 Press ▲ or ▼ to choose `Scan to Media`.
Press **OK**.

5 Do one of the following.

- To change the quality, go to step ❻.
- Press **Mono Start** or **Colour Start** to start scanning without changing additional settings.

6 Press ▲ or ▼ to choose `150dpi Color`, `300dpi Color`, `600dpi Color`, `200x100dpi B/W` or `200dpi B/W`.
Press **OK**.

7 Do one of the following.

- To change the file type, go to step ❽.
- Press **Mono Start** or **Colour Start** to start scanning without changing additional settings.

8 Press ▲ or ▼ to choose `JPEG`, `PDF` or `TIFF`.
Press **OK**.

Note

- If you chose colour in the resolution setting, you cannot choose `TIFF`.
- If you chose monochrome in the resolution setting, you cannot choose `JPEG`.

9 Press **Mono Start** or **Colour Start**.

Understanding the Error Messages

Once you are familiar with the types of errors that can occur while you are using PhotoCapture Center™, you can easily identify and troubleshoot any problems.

- `Hub is Unusable.`

  This message will appear if a Hub or USB Flash memory drive with a Hub has been put into the USB direct interface.

- `Media Error`

  This message will appear if you put in a memory card that is either bad or not formatted, or when there is a problem with the media drive. To clear this error, take out the memory card.

- `No File`

  This message will appear if you try to access a memory card or USB Flash memory drive in the drive (slot) that does not contain a .JPG file.

- `Out of Memory`

  This message will appear if you are working with images that are too large for the machine's memory. This message will also appear when a memory card or USB Flash memory drive you are using does not have enough available space for the scanned document.

- `Media is Full.`

  This message will appear if you are trying to save more than 999 files in a memory card or USB Flash memory drive.

- `Unusable Device`

  This message will appear if a USB device or USB Flash memory drive that is not supported has been connected to the USB direct interface. (For more information, visit us at http://solutions.brother.com.) This message can also appear if you connect a broken device to the USB direct interface.

6 Printing photos from a camera

Printing photos directly from a PictBridge camera

Your Brother machine supports the PictBridge standard, allowing you to connect to and print photos directly from any PictBridge compatible digital camera.

If your camera is using the USB Mass Storage standard, you can also print photos from a digital camera without PictBridge. See *Printing photos directly from a digital camera (without PictBridge)* on page 52.

PictBridge requirements

To avoid errors, remember the following points:

- The machine and the digital camera must be connected using a suitable USB cable.
- The image file extension must be .JPG (other image file extensions like .JPEG, .TIF, .GIF and so on will not be recognized).
- PhotoCapture Center™ operations are not available when using the PictBridge feature.

Setting your digital camera

Make sure your camera is in PictBridge mode. The following PictBridge settings may be available from the LCD of your PictBridge compatible camera.

Depending on your camera some of these settings may not be available.

Camera Menu Selections	Options
Paper Size	Letter, A4, 10x15cm, Printer Settings (Default setting) [2]
Paper Type	Plain Paper, Glossy Paper, Inkjet Paper, Printer Settings (Default setting) [2]
Layout	Borderless: On, Borderless: Off, Printer Settings (Default setting) [2]
DPOF setting [1]	-
Print Quality	Normal, Fine, Printer Settings (Default setting) [2]
Color Enhancement	On, Off, Printer Settings (Default setting) [2]

[1] See *DPOF printing* on page 51 for more details.

[2] If your camera is set to use the Printer Settings (Default setting), the machine will print your photo using the following settings.

Settings	Options
Paper Size	10x15cm
Paper Type	Glossy Paper
Layout	Borderless: On
Print Quality	Fine
Color Enhancement	Off

- When your camera does not have any menu selections, this setting is also used.
- The names and availability of each setting depends on the specification of your camera.

Please refer to the documentation supplied with your camera for more detailed information on changing PictBridge settings.

Printing Images

Note

Remove any memory cards or USB Flash memory drive from the machine before connecting a digital camera.

1. Make sure that your camera is turned off. Connect your camera to the USB direct interface (1) on the machine using the USB cable.

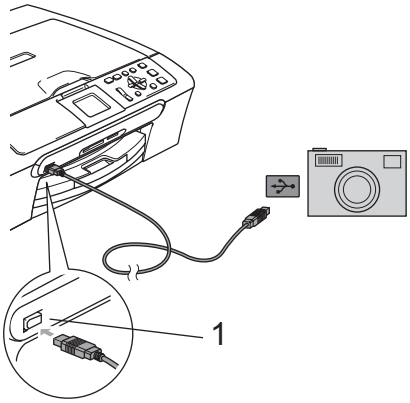

1 USB direct interface

2. Turn on the camera.
When the machine has recognized the camera, the LCD shows `Camera Connected`.

3. Choose the photo you want to print following the instructions from your camera.When the machine starts printing a photo, the LCD will show `Printing`.

WARNING

To prevent damage to your machine, do not connect any device other than a digital camera or USB Flash memory drive to the USB direct interface.

DPOF printing

DPOF stands for Digital Print Order Format.

Major digital camera manufacturers (Canon Inc., Eastman Kodak Company, Fuji Photo Film Co. Ltd., Matsushita Electric Industrial Co. Ltd. and Sony Corporation) created this standard to make it easier to print images from a digital camera.

If your digital camera supports DPOF printing, you will be able to choose on the digital camera display the images and number of copies you want to print.

Printing photos directly from a digital camera (without PictBridge)

If your camera supports the USB Mass Storage standard, you can connect your camera in storage mode. This enables you to print photos from your camera.

If you would like to print photos in PictBridge mode, see *Printing photos directly from a PictBridge camera* on page 50.

Note

The name, availability and operation differ among digital cameras. Please refer to the documentation supplied with your camera for detailed information, such as how to switch from PictBridge mode to mass storage mode.

Printing Images

Note

Remove any memory cards or USB Flash memory drive from the machine before connecting a digital camera.

1. Make sure that your camera is turned off. Connect your camera to the USB direct interface (1) on the machine using the USB cable.

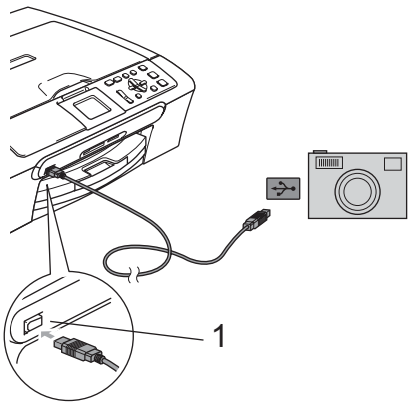

1 USB direct interface

2. Turn on the camera.
3. Following the steps in *Print Images* on page 37.

WARNING

To prevent damage to your machine, do not connect any device other than a digital camera or USB Flash memory drive to the USB direct interface.

Understanding the Error Messages

Once you are familiar with the types of errors that can occur while you are using PictBridge, you can easily identify and troubleshoot any problems.

- `Out of Memory`

  This message will appear if you are working with images that are too large for the machine's memory.

- `Unusable Device`

  This message will appear if you connect a camera which is not in PictBridge mode nor using the USB Mass Storage standard. This message can also appear if you connect a broken device to the USB direct interface.

For more detailed solutions see *Error messages* on page 70.

Section IV

Software

Software and Network features 56

7 Software and Network features

The CD-ROM includes the Software User's Guide and Network User's Guide (DCP-560CN only) for features available when connected to a computer (for example, printing and scanning). The guide has easy to use links that, when clicked, will take you directly to a particular section.

You can find information on these features:

- Printing
- Scanning
- ControlCenter3 (for Windows®)
- ControlCenter2 (for Macintosh®)
- PhotoCapture Center™
- Network Printing (DCP-560CN only)
- Network Scanning (DCP-560CN only)

How to read the HTML User's Guide

This is a quick reference for using the HTML User's Guide.

(For Windows®)

Note

If you have not installed the software, see *Viewing Documentation* on page 3.

1. From the **Start menu**, point to **Brother**, DCP-XXXX (where **XXXX** is your model number) from the programs group, then click **User's Guides** in HTML format.
2. Click **SOFTWARE USER'S GUIDE** (or **NETWORK USER'S GUIDE**) from the top menu.

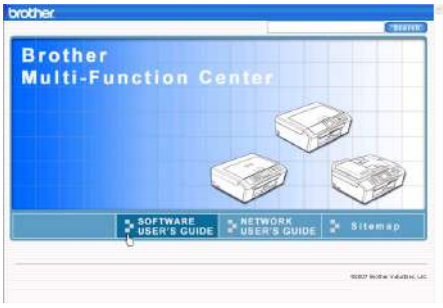

3. Click the heading you would like to read from the list at the left of the window.

(For Macintosh®)

1. Make sure your Macintosh® is turned on. Insert the Brother CD-ROM into your CD-ROM drive.
2. Double-click the **Documentation** icon.
3. Double-click your language folder, and then double-click the top page file.
4. Click **SOFTWARE USER'S GUIDE** (or **NETWORK USER'S GUIDE**) in the top menu, and then click the heading you would like to read from the list at the left of the window.

Section V

Appendixes

Safety and Legal	58
Troubleshooting and Routine Maintenance	66
Menu and Features	84
Specifications	93
Glossary	105

A Safety and Legal

Choosing a location

Put your machine on a flat, stable surface that is free of vibration and shocks, such as a desk. Put the machine near a standard grounded electrical socket. Choose a location where the temperature remains between 10°C and 35°C.

CAUTION

- Avoid placing your machine in a high-traffic area.
- Avoid placing your machine on carpet.
- DO NOT put the machine near heaters, air conditioners, refrigerators, medical equipment, chemicals or water.
- DO NOT expose the machine to direct sunlight, excessive heat, moisture, or dust.
- DO NOT connect your machine to electrical sockets controlled by wall switches or automatic timers.
- Disruption of power can wipe out information in the machine's memory.
- DO NOT connect your machine to electrical sockets on the same circuit as large appliances or other equipment that might disrupt the power supply.
- Avoid interference sources, such as speakers or the base units of non-Brother cordless phones.

To use the machine safely

Please keep these instructions for later reference and read them before attempting any maintenance.

WARNING

There are high voltage electrodes inside the machine. Before you clean the inside of the machine, make sure you have unplugged the power cord from the electrical socket. Doing this will prevent an electrical shock.

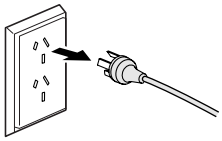

DO NOT handle the plug with wet hands. Doing this may cause an electrical shock.

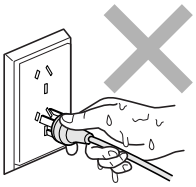

DO NOT pull in the middle of the AC power cord. Doing this may cause an electrical shock.

DO NOT put your hands on the edge of the machine under the document cover or the scanner cover. Doing this may cause injury.

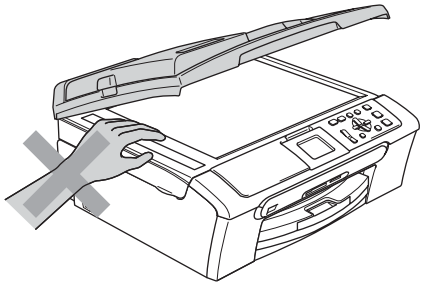

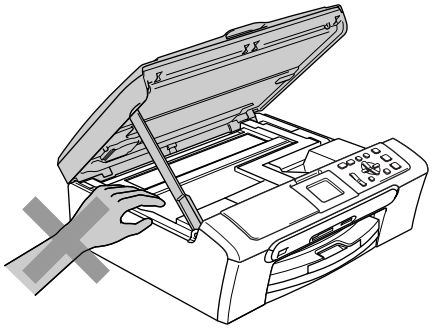

DO NOT put your hands on the edge of the paper tray under the output paper tray cover. Doing this may cause injury.

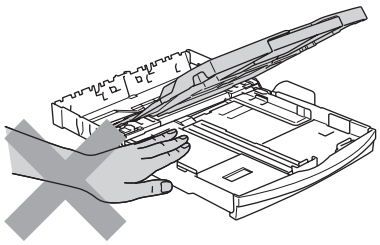

DO NOT touch the paper feed roller. Doing this may cause injury.

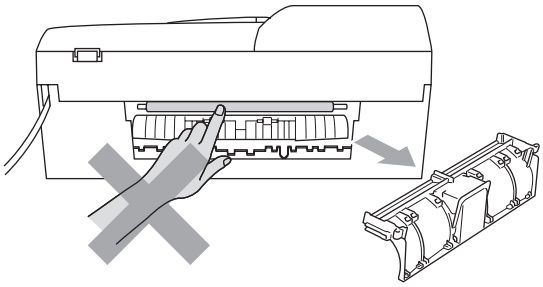

DO NOT touch the area shaded in the illustration. Doing this may cause injury.

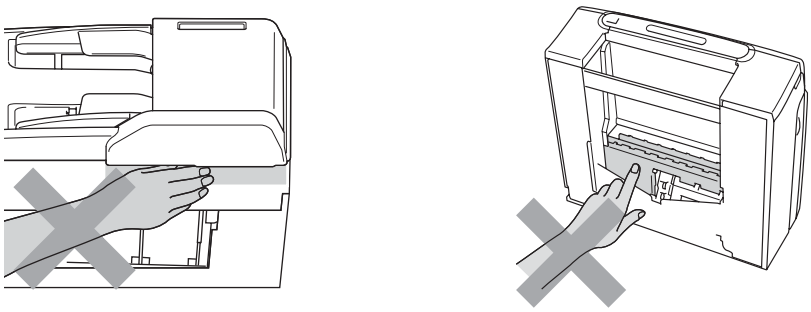

When moving the machine you must lift it from the base, by placing a hand at each side of the unit as shown in the illustration. DO NOT carry the machine by holding the scanner cover.

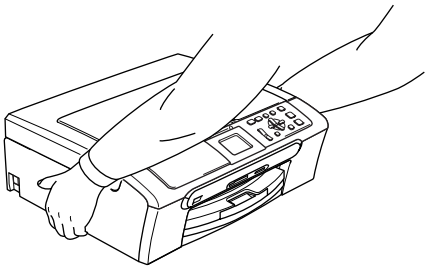

DO NOT use flammable substances or any type of spray to clean the inside or outside of the machine. Doing this may cause a fire or electrical shock.

If the machine becomes hot, releases smoke, or generates any strong smells, immediately turn off the power switch and unplug the machine from the electrical socket. Call your Brother dealer or Brother Customer Service.

If metal objects, water or other liquids get inside the machine, immediately turn off the power switch and unplug the machine from the electrical socket. Call your Brother dealer or Brother Customer Service.

WARNING

- This product must be installed near an electrical socket that is easily accessible. In case of an emergency, you must unplug the power cord from the electrical socket to shut off the power completely.
- Always make sure the plug is fully inserted.

Important safety instructions

1 Read all of these instructions.

2 Save them for later reference.

3 Follow all warnings and instructions marked on the product.

4 Unplug this product from the wall socket before cleaning the inside of the machine. DO NOT use liquid or aerosol cleaners. Use a damp cloth for cleaning.

5 DO NOT use this product near water.

6 DO NOT place this product on an unstable cart, stand, or table. The product may fall, causing serious damage to the product.

7 Slots and openings in the casing and the back or bottom are provided for ventilation. To ensure reliable operation of the product and to protect it from overheating, these openings must not be blocked or covered. The openings should never be blocked by placing the product on a bed, sofa, rug, or other similar surface. This product should never be placed near or over a radiator or heater. This product should never be placed in a built-in installation unless adequate ventilation is provided.

8 This product should be operated from the type of power source indicated on the label. If you are not sure of the type of power available, call your dealer or local power company.

9 Use only the power cord supplied with this machine.

10 This product is equipped with a 3-wire grounded plug, a plug having a third (grounded) pin. This plug will only fit into a grounded power outlet. This is a safety feature. If you are unable to insert the plug into the outlet, call your electrician to replace your obsolete outlet. DO NOT defeat the purpose of the grounded plug.

11 DO NOT allow anything to rest on the power cord. DO NOT place this product where people can walk on the cord.

12 DO NOT place anything in front of the machine that will block printing. DO NOT place anything in the path of printing.

13 Wait until pages have exited the machine before picking them up.

14 Unplug this product from the power socket and refer all servicing to Brother Authorized Service Personnel under the following conditions:

- When the power cord is damaged or frayed.
- If liquid has been spilled into the product.
- If the product has been exposed to rain or water.
- If the product does not operate normally when the operating instructions are followed, adjust only those controls that are covered by the operating instructions. Incorrect adjustment of other controls may result in damage and will often require extensive work by a qualified technician to restore the product to normal operation.
- If the product has been dropped or the casing has been damaged.
- If the product exhibits a distinct change in performance, indicating a need for service.

15 To protect your product against power surges, we recommend the use of a power protection device (Surge Protector).

16 To reduce the risk of fire, electric shock and injury to people, note the following:

- DO NOT use this product near appliances that use water, a swimming pool, or in a wet basement.
- DO NOT use the machine during an electrical storm (there is the remote possibility of an electrical shock) or to report a gas leak in the vicinity of the leak.

IMPORTANT - For your safety

To ensure safe operation, the supplied three-pin plug must be inserted only into a standard three-pin electrical socket that is effectively grounded through the normal household wiring.

The fact that the equipment operates satisfactorily does not imply that the power is grounded and that the installation is completely safe. For your safety, if in any doubt about the effective grounding of the power, consult a qualified electrician.

LAN connection (DCP-560CN only)

CAUTION

DO NOT connect this product to a LAN connection that is subject to over-voltages.

Legal limitations for copying

It is an offence to make reproductions of certain items or documents with the intent to commit fraud. This memorandum is intended to be a guide rather than a complete list. We suggest you check with relevant legal authorities if in doubt about a particular item or document.

The following are examples of documents which may not be copied:

- Money
- Bonds or other certificates of debt
- Certificates of Deposit
- Armed Forces Service or Draft papers.
- Passports
- Postage Stamps (cancelled or uncancelled)
- Immigration Papers
- Welfare documents
- Cheques or Drafts drawn by Governmental Agencies
- Identification Documents, badges or insignias
- Licences and Certificates of Title to motor vehicles

Copyrighted works cannot be copied. Sections of a copyrighted work can be copied for ‘fair dealing’. Multiple copies would indicate improper use.

Works of art should be considered the equivalent of copyrighted works.

Licenses and Certificates of Title to motor vehicles may not be copied under certain state/provincial laws.

Trademarks

The Brother logo is a registered trademark of Brother Industries, Ltd.

Brother is a registered trademark of Brother Industries, Ltd.

Multi-Function Link is a registered trademark of Brother International Corporation.

© 2007 Brother Industries, Ltd. All rights reserved.

Microsoft and Windows are registered trademarks of Microsoft in the U.S. and other countries.

Windows Vista is either a registered trademark or trademark of Microsoft Corporation in the United States and/or other countries.

Macintosh and TrueType are registered trademarks of Apple Inc.

Nuance, the Nuance logo, PaperPort and ScanSoft are trademarks or registered trademarks of Nuance Communications, Inc. or its affiliates in the United States and/or other countries.

Presto! PageManager is a registered trademark of NewSoft Technology Corporation.

Microdrive is a trademark of International Business Machine Corporation.

CompactFlash is a registered trademark of SanDisk Corporation.

Memory Stick is a registered trademark of Sony Corporation.

SanDisk is a licensee of the SD and miniSD trademarks.

MultiMediaCard is a trademark of Infineon Technologies and licensed to the MultiMediaCard Association.

xD-Picture Card is a trademark of Fujifilm Co. Ltd., Toshiba Corporation and Olympus Optical Co. Ltd.

PictBridge is a trademark.

Memory Stick Pro, Memory Stick Pro Duo, Memory Stick Duo and MagicGate are trademarks of Sony Corporation.

FaceFilter Studio is a trademark of Reallusion, Inc.

Each company whose software title is mentioned in this manual has a Software License Agreement specific to its proprietary programs.

All other brand and product names mentioned in this User's Guide, the Software User's Guide and the Network User’s Guide (DCP-560CN only) are registered trademarks of their respective companies.

B Troubleshooting and Routine Maintenance

Troubleshooting

If you think there is a problem with your machine, check the chart below and follow the troubleshooting tips.

Most problems can be easily resolved by yourself. If you need additional help, the Brother Solutions Center offers the latest FAQs and troubleshooting tips. Visit us at http://solutions.brother.com.

If you are having difficulty with your machine

Printing

Difficulty	Suggestions
No printout	Check the interface cable on both the machine and your computer. (See the *Quick Setup Guide*.)
	Make sure the machine is plugged in and not turned off.
	One or more ink cartridges are empty. (See *Replacing the ink cartridges* on page 75.)
	Check to see if the LCD is showing an error message. (See *Error messages* on page 70.)
	Check that the correct printer driver has been installed and chosen.
	Make sure that the machine is online. Click **Start** and then **Printers and Faxes**. Right-click and choose **Brother DCP-XXXX** (where XXXX is your model name), and make sure that **Use Printer Offline** is unchecked.
Poor print quality	Check the print quality. (See *Checking the print quality* on page 80.)
	Make sure that the Media Type setting in the printer driver or the Paper Type setting in the machine's menu matches the type of paper you are using. (See *Printing* for Windows® or *Printing and Faxing* for Macintosh® in the Software User's Guide on the CD-ROM.)
	Make sure that your ink cartridges are fresh. The following may cause ink to clog: ■ The expiration date written on the cartridge package has passed. (Cartridges stay usable for up to two years if kept in their original packaging.) ■ The ink cartridge was in your machine over six months. ■ The ink cartridge may not have been stored properly before use.
	Try using the recommended types of paper. (See *Acceptable paper and other media* on page 12.)
	The recommended environment for your machine is between 20°C to 33°C.
White horizontal lines appear in text or graphics.	Clean the print head. (See *Cleaning the print head* on page 80.)
	Try using the recommended types of paper. (See *Acceptable paper and other media* on page 12.)
	If you want to print on Photo L or 10 × 15 cm paper, make sure you use the photo paper tray. (See *Loading photo paper* on page 20.)
The machine prints blank pages.	Clean the print head. (See *Cleaning the print head* on page 80.)

Printing (continued)

Difficulty	Suggestions
Characters and lines are stacked.	Check the printing alignment. (See *Checking the print alignment* on page 81.)
Printed text or images are skewed.	Make sure the paper is loaded properly in the paper tray and the paper side guide is adjusted correctly. (See *Loading paper and other media* on page 16.)
	Make sure the Jam Clear Cover is set properly.
Smudged stain at the top center of the printed page.	Make sure the paper is not too thick or curled. (See *Acceptable paper and other media* on page 12.)
Printing appears dirty or ink seems to run.	Make sure you are using the recommended types of paper. (See *Acceptable paper and other media* on page 12.) Don't handle the paper until the ink is dry.
Stains appear on the reverse side or at the bottom of the page.	Make sure the printer platen is not dirty with ink. (See *Cleaning the machine printer platen* on page 79.)
	Make sure you are using the paper support flap. (See *Loading paper and other media* on page 16.)
The machine prints dense lines on the page.	Check **Reverse Order** in the **Basic** tab of the printer driver.
The printouts are wrinkled.	In the printer driver **Basic** tab, click **Settings**, and uncheck **Bi-Directional Printing**.
Cannot perform ‘2 in 1’ or ‘4 in 1’ printing.	Check that the paper size setting in the application and in the printer driver are the same.
Print speed is too slow.	Try changing the printer driver setting. The highest resolution needs longer data processing, sending and printing time. Try the other quality settings in the printer driver **Basic** tab. Also, click the **Settings**, and make sure you uncheck **Colour Enhancement**.
	Turn the borderless feature off. Borderless printing is slower than normal printing. (See *Printing* for Windows® or *Printing and Faxing* for Macintosh® in the Software User's Guide on the CD-ROM.)
Colour Enhancement is not working properly.	If the image data is not full colour in your application (such as 256 colour), Colour Enhancement will not work. Use at least 24 bit colour data with the Colour Enhancement feature.
Machine feeds multiple pages.	Make sure the paper is loaded properly in the paper tray. (See *Loading paper and other media* on page 16.)
	Check that more than two types of paper are not loaded in the paper tray at any one time.
Printed pages are not stacked neatly.	Make sure you are using the paper support flap. (See *Loading paper and other media* on page 16.)
Printed pages refeed and cause a paper jam.	Make sure you pull out the paper support until it clicks.
Machine does not print from Paint Brush.	Try setting the Display setting to ‘256 colours’.
Machine does not print from Adobe Illustrator.	Try to reduce the print resolution. (See *Printing* for Windows® or *Printing and Faxing* for Macintosh® in the Software User's Guide on the CD-ROM.)
The machine cannot print full pages of a document. `Out of Memory` message occurs.	Reduce the printing resolution. (See Printing for Windows® or Printing and Faxing for Macintosh® in the Software User’s Guide on the CD-ROM.) Reduce the complexity of your document and try again. Reduce the graphic quality or the number of font sizes within your application software.

B

Copying Difficulties

Difficulty	Suggestions
Vertical streaks appear on copies.	If you see vertical streaks on copies, clean the scanner. (See *Cleaning the scanner* on page 78.)
Poor copy results when using the ADF (DCP-560CN only)	Try using the scanner glass. (See *Using the scanner glass* on page 11.)
Vertical black line appears in copies. (DCP-560CN only)	Black vertical lines on copies are typically caused by dirt or correction fluid on the glass strip. Clean the glass strip. (See *Cleaning the scanner* on page 78.)

Scanning Difficulties

Difficulty	Suggestions
TWAIN/WIA errors appear when starting to scan.	Make sure the Brother TWAIN/WIA driver is chosen as the primary source. In PaperPort™ 11SE with OCR, click **File**, **Scan or Get Photo** and click **Select** to choose the Brother TWAIN/WIA driver.
Poor scanning results when using the ADF. (DCP-560CN only)	Try using the scanner glass. (See *Using the scanner glass* on page 11.)

Software Difficulties

Difficulty	Suggestions
Cannot install software or print.	Run the **Repair MFL-Pro Suite** program on the CD-ROM. This program will repair and reinstall the software.
'Device Busy'	Make sure the machine is not showing an error message on the LCD.
Cannot print images from FaceFilter Studio.	To use FaceFilter Studio, you must install the FaceFilter Studio application from the CD-ROM supplied with your machine. To install FaceFilter Studio see the *Quick Setup Guide*. Also, before you start FaceFilter Studio for the first time, you must make sure your Brother machine is turned On and connected to your computer. This will allow you to access all the functions of FaceFilter Studio.

PhotoCapture Center™ Difficulties

Difficulty	Suggestions
Removable Disk does not work properly.	1 Have you installed the Windows® 2000 update? If not, do the following: 1) Unplug the USB cable. 2) Install the Windows® 2000 update using one of the following methods. ■ Install MFL-Pro Suite from the CD-ROM. (See the *Quick Setup Guide*.) ■ Download the latest service pack from the Microsoft Web site. 3) Wait about 1 minute after you restart the PC, and then connect the USB cable. 2 Take out the memory card or USB Flash memory drive and put it back in again. 3 If you have tried 'Eject' from within Windows®, take out the memory card or USB Flash memory drive before you continue. 4 If an error message appears when you try to eject the memory card or USB Flash memory drive, it means the card is being accessed. Wait a while and then try again. 5 If all of the above do not work, turn off your PC and machine, and then turn them on again. (You will have to unplug the power cord of the machine to turn it off.)
Cannot access Removable Disk from Desktop icon.	Make sure that you have correctly inserted the memory card or USB Flash memory drive.

Network Difficulties

Difficulty	Suggestions
Cannot print over the Network.	Make sure that your machine is powered on and is online and in Ready mode. Print a Network Configuration list (see *Printing Reports* on page 9) and check the current Network settings printed in this list. Reconnect the LAN cable to the hub to verify that the cabling and network connections are good. If possible, try connecting the machine to a different port on your hub using a different cable. If the connections are good, the machine shows `LAN Active` for 2 seconds. (If you are having Network problems, see the *Network User's Guide* on the CD-ROM for more information.)
The network scanning feature does not work.	(For Windows® users only) Firewall settings on your PC may be rejecting the necessary network connection. Follow the instructions below to configure the Firewall. If you are using personal Firewall software, see the User's Guide for your software or contact the software manufacturer. For Windows® XP SP2 and Windows Vista™ users, see *Firewall settings* in the Software User's Guide on the CD-ROM. For Windows® XP SP1 user's, please visit the Brother Solutions Center.
Your computer cannot find your machine.	<Windows® users> Firewall settings on you PC may be rejecting the necessary network connection. For details, see the instruction above. <Macintosh® users> Re-select your machine in the Device Selector application located in Macintosh HD/Library/Printers/Brother/Utilities/DeviceSelector or from the model of ControlCenter2.

B

Error messages

As with any sophisticated office product, errors may occur. If this happens, your machine identifies the error and shows an error message. The most common error messages are shown below.

You can correct most errors by yourself. If you need more help, the Brother Solutions Center offers the latest FAQs and troubleshooting tips.

Visit us at http://solutions.brother.com.

Error Message	Cause	Action
Cover is Open.	The scanner cover is not closed completely.	Lift the scanner cover and then close it again.
	The ink cartridge cover is not completely closed.	Firmly close the ink cartridge cover until it clicks.
Data Remaining	Print data is left in the machine's memory.	Re-start printing from your computer.
	Print data is left in the machine's memory. The USB cable was unplugged while the computer was sending the data to the machine.	Press **Stop/Exit**. The machine will cancel the job and clear it from the memory. Try to print again.
Document Jam	The document was not inserted or fed properly, or the document scanned from the ADF was too long.	See *Using the ADF (DCP-560CN only)* on page 10. See *Document jam (DCP-560CN only)* on page 72.
High Temperature	The print head is too warm.	Allow the machine to cool down.
Hub is Unusable.	A Hub or USB Flash memory drive with Hub has been connected to the USB direct interface.	A Hub or USB Flash memory drive with Hub are not supported. Unplug the device from the USB direct interface.
Image Too Long.	The proportions of your photo are irregular so effects could not be added.	Choose a regularly proportioned image.
Image Too Small.	The size of your photo is too small to trim.	Choose a larger image.
Ink Empty	One or more of the ink cartridges is empty. The machine will stop all print operations.	Replace the empty ink cartridges. (See *Replacing the ink cartridges* on page 75.)
Low Temperature	The print head is too cold.	Allow the machine to warm up.
Media Error	The memory card is either corrupted, improperly formatted, or there is a problem with the memory card.	Put the card firmly into the slot again to make sure it is in the correct position. If the error remains, check the media drive (slot) of the machine by putting in another memory card that you know is working.

Error Message	Cause	Action
Media is Full.	The memory card or USB Flash memory drive you are using already contains 999 files.	Your machine can only save to your memory card or USB Flash memory drive if it contains less than 999 files. Try deleting unused files to free some space and try again.
Near Empty	One or more of the ink cartridges are running out of ink.	Order a new ink cartridge. Do Not Replace Ink Cartridge until Ink Empty message appears.
No Cartridge	An ink cartridge is not installed properly.	Take out the ink cartridge and put it in again seating it properly. (See *Replacing the ink cartridges* on page 75.)
No File	The memory card or USB Flash memory drive in the media drive does not contain a .JPG file.	Put the correct memory card or USB Flash memory drive into the slot again.
No Paper Fed	The machine is out of paper or paper is not properly loaded in the paper tray.	Do one of the following: ■ Refill the paper in the paper tray, and then press **Mono Start** or **Colour Start**. ■ Remove the paper and load it again and then press **Mono Start** or **Colour Start**.
	The paper is jammed in the machine.	See *Printer jam or paper jam* on page 73.
Out of Memory	The machine's memory is full.	**Copy operation in progress** Press **Stop/Exit** and wait until the other operations in progress finish and then try again. **Printing operation in progress** Reduce print resolution. (For details, *see* Printing for Windows® or Printing and Faxing for Macintosh® in the Software User's Guide on the CD-ROM.)
	The memory card or USB Flash memory drive you are using does not have enough free space to scan the documents.	Delete unused files from your memory card or USB Flash memory drive to make some free space and then try again.
Paper Jam	Paper is jammed in the machine.	Remove the Jam Clear Cover (at the back of the machine) and pull out the jammed paper. See *Printer jam or paper jam* on page 73.
Unable to Clean XX Unable to Init. XX Unable to Print XX Unable to Scan XX	The machine has a mechanical problem.	Disconnect the machine from the power for several minutes, then reconnect it.

B

Error Message	Cause	Action
Unusable Device Disconnect device from front connector & turn machine off & then on	A broken device has been connected to the USB direct interface.	Unplug the device from the USB direct interface, then press **On/Off** to turn the machine off and then on again.
Unusable Device Please Disconnect USB Device.	A USB device or USB Flash memory drive that is not supported has been connected to the USB direct interface. For more information, visit us at http://solutions.brother.com.	Unplug the device from the USB direct interface.

Changing LCD language

You can change the LCD language.

1. Press **Menu**.
2. Press ▲ or ▼ to choose Initial Setup.
   Press **OK**.
3. Press ▲ or ▼ to choose Local Language.
   Press **OK**.
4. Press ▲ or ▼ to choose your language.
   Press **OK**.
5. Press **Stop/Exit**.

Error animation

Error animation displays step-by-step instructions when paper gets jammed or ink cartridges become empty. You can read the steps at your own pace by pressing ▶ to see the next step and ◀ to go backward. If you do not press a key, after 1 minute the animation starts running automatically again.

Note

You can press ▶, ◀ or **OK** to pause the auto-animation and go back to step-by-step mode.

Document jam (DCP-560CN only)

Documents can jam in the ADF unit if they are not inserted or fed properly, or if they are too long. Follow the steps below to clear a document jam.

Document is jammed in the top of the ADF unit

1. Take out any paper from the ADF that is not jammed.
2. Open the ADF cover.
3. Pull the jammed document up and to the left.

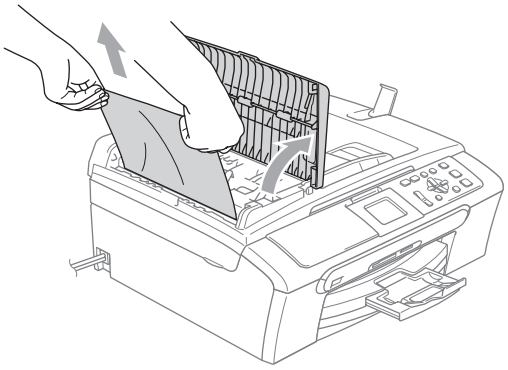

4. Close the ADF cover.
5. Press **Stop/Exit**.

Note

To avoid future document jams close the ADF cover properly by pushing it gently in the middle.

Document is jammed inside the ADF unit

1. Take out any paper from the ADF that is not jammed.
2. Lift the document cover.
3. Pull the jammed document out to the left.

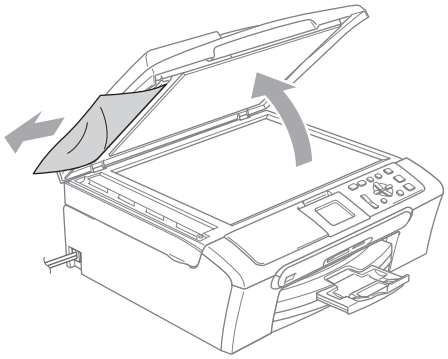

4. Close the document cover.
5. Press **Stop/Exit**.

Printer jam or paper jam

Take out the jammed paper depending on where it is jammed in the machine. Open and close the scanner cover to clear the error.

1. Pull the paper tray (1) out of the machine.

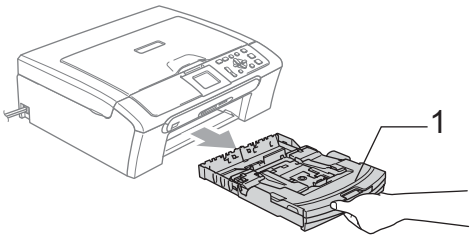

2. Pull out the jammed paper (1).

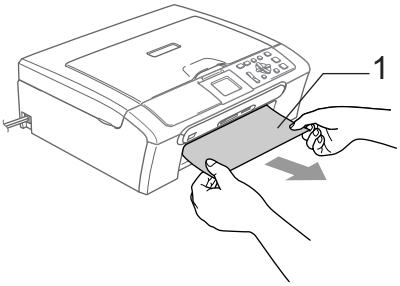

- If you cannot remove the jammed paper from the front, or the error message still appears on the LCD after you have removed the jammed paper, please go to the next step.

3. Remove the Jam Clear Cover (1). Pull the jammed paper out of the machine.

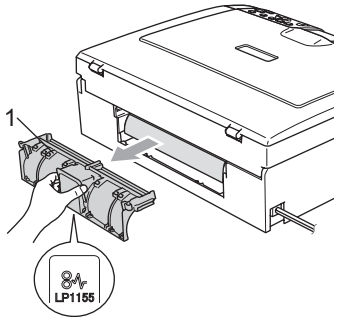

CAUTION

DO NOT place the jam clear cover face down as shown in the illustration. You may damage the cover and cause paper jams.

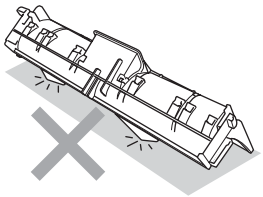

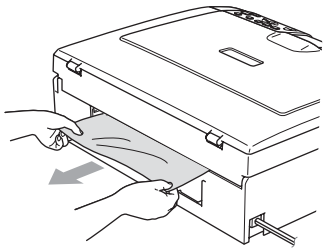

B

4 Put the Jam Clear Cover back on. Make sure the cover is set properly.

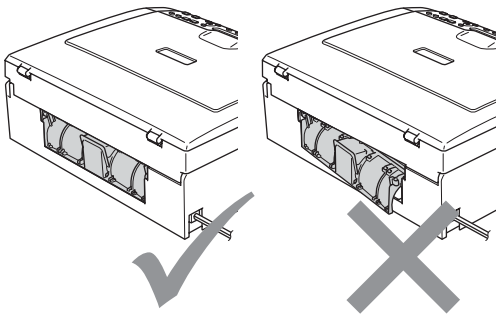

5 Lift the scanner cover (1) from the front side of the machine until it locks securely into the open position. Make sure that there is no jammed paper left inside the machine. Check *both* ends of the print carriage.

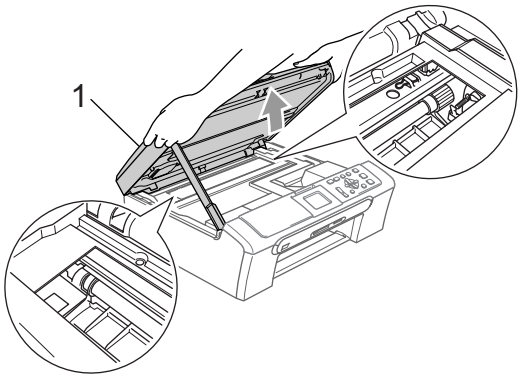

Note

If the paper is jammed under the print head, unplug the machine from the power source, and then move the print head to take out the paper.

6 Lift the scanner cover to release the lock (1). Gently push the scanner cover support down (2) and close the scanner cover (3).

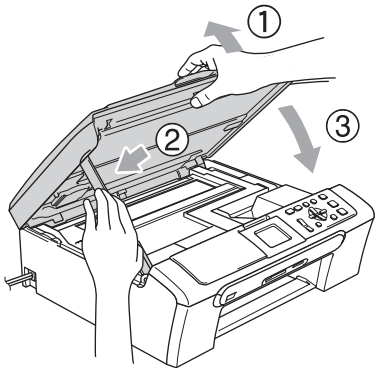

7 Push the paper tray firmly back into the machine. While holding the paper tray in place, pull out the paper support until it clicks and unfold the paper support flap.

Note

Make sure you pull out the paper support until it clicks.

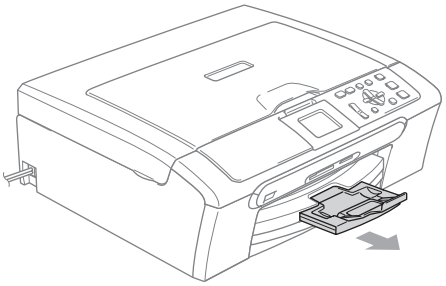

Routine maintenance

Replacing the ink cartridges

Your machine is equipped with an ink dot counter. The ink dot counter automatically monitors the level of ink in each of the 4 cartridges. When the machine detects an ink cartridge is running out of ink, the machine will tell you with a message on the LCD.

Note

For example, when one of the ink cartridge *is nearly empty*, the LCD will display `Near Empty` (name of colour).

You should purchase a replacement cartridge in preparation for when the machine indicates the colour is completely empty.

When one of the ink cartridge *is empty*, the LCD will display `Ink Empty` (name of colour).

You should *only* replace the actual ink cartridge when this message `Ink Empty` appears on the LCD.

The LCD will tell you which ink cartridge is low or needs replacing. Be sure to follow the LCD prompts to replace the ink cartridges in the correct order.

Even though the machine tells you that an ink cartridge is empty, there will be a small amount of ink left in the ink cartridge. It is necessary to keep some ink in the ink cartridge to prevent air from drying out and damaging the print head assembly.

1. Open the ink cartridge cover.
   If one or more ink cartridges are empty, for example Black, the LCD shows `Ink Empty` and BK `Black`.

2. Pull the lock release lever down and take out the ink cartridge for the color shown on the LCD.

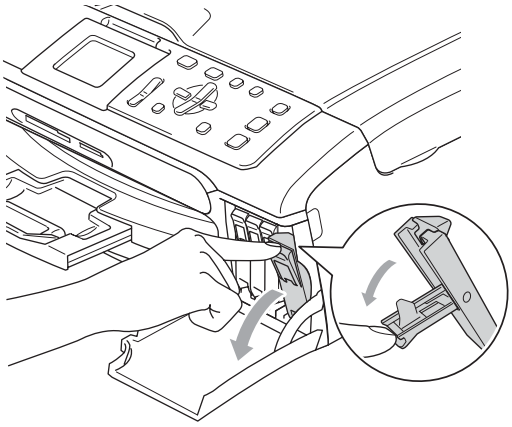

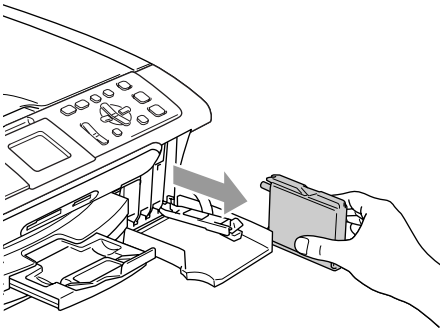

3. Open the new ink cartridge bag for the colour shown on the LCD, and then take out the ink cartridge.

4. Remove the protective yellow cap (1).

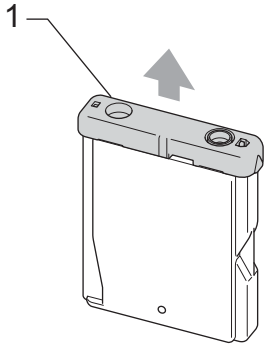

B

Improper Setup

DO NOT touch the area shown in the illustration below.

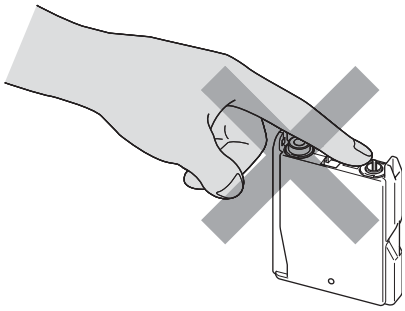

Note

If the protective yellow caps come off when you open the bag, the cartridge will not be damaged.

5 Each colour has its own correct position. Insert the ink cartridge in the direction of the arrow on the label.

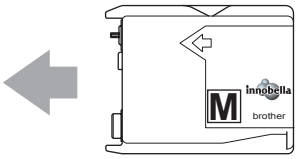

6 Lift the lock release lever and push it until it clicks, and then close the ink cartridge cover.

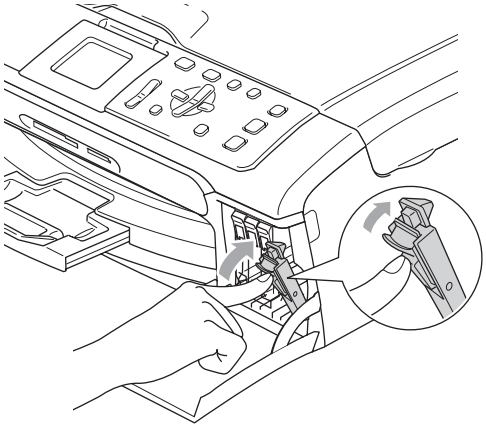

7 The machine will automatically reset the ink dot counter.

Note

- If you replaced an ink cartridge, the LCD will ask you to verify that it was a brand new one.
  (For example, `Did You Change` BK `Black`) For each new cartridge you installed, press **+** (`Yes`) to automatically reset the ink dot counter for that colour. If the ink cartridge you installed is not a brand new one, be sure to press **-** (`No`).
- If the LCD shows `No Cartridge` after you install the ink cartridges, check that the ink cartridges are installed properly.

WARNING

If ink gets in your eyes, wash them out with water at once and call a doctor if you are concerned.

CAUTION

DO NOT take out ink cartridges if you do not need to replace them. If you do so, it may reduce the ink quantity and the machine will not know the quantity of ink left in the cartridge.

DO NOT touch the cartridge insertion slots. If you do so, the ink may stain your skin.

If ink stains your skin or clothing, wash with soap or detergent at once.

If you mix the colours by installing an ink cartridge in the wrong position, clean the print head several times after correcting the cartridge installation.

Once you open an ink cartridge, install it in the machine and use it up within six months of installation. Use unopened ink cartridges by the expiration date written on the cartridge package.

DO NOT dismantle or tamper with the ink cartridge, this can cause the ink to leak out of the cartridge.

Brother multifunction machines are designed to work with ink of a particular specification and will work to a level of optimum performance when used with genuine Brother Branded ink cartridges. Brother cannot guarantee this optimum performance if ink or ink cartridges of other specifications are used. Brother does not therefore recommend the use of cartridges other than genuine Brother Branded cartridges or the refilling of empty cartridges with ink from other sources. If damage is caused to the print head or other parts of this machine as a result of using incompatible products with this machine, any repairs required as a result may not be covered by the warranty.

Cleaning the outside of the machine

CAUTION

Use neutral detergents. Cleaning with volatile liquids such as thinner or benzine will damage the outside surface of the machine.

DO NOT use cleaning materials that contain ammonia.

DO NOT use isopropyl alcohol to remove dirt from the control panel. It may crack the panel.

Clean the outside of the machine as follows:

1. Pull the paper tray (1) completely out of the machine.

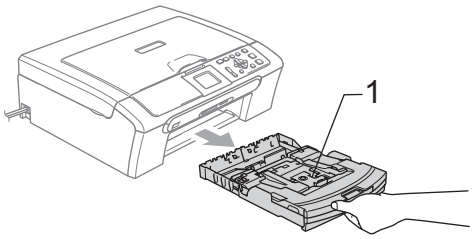

2. Wipe the outside of the machine with a soft cloth to remove dust.

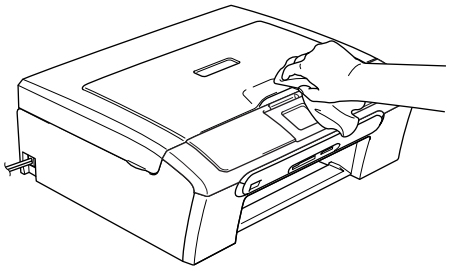

3. Lift the output paper tray cover and remove anything that is stuck inside the paper tray.

B

4 Wipe the inside and outside of the paper tray with a soft cloth to remove dust.

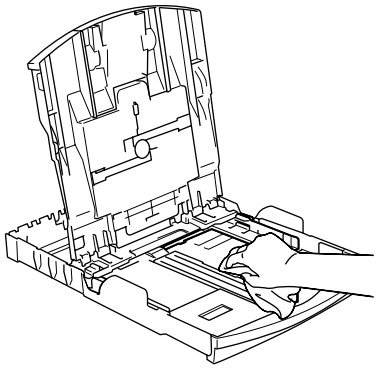

5 Close the output paper tray cover and put the paper tray firmly back in the machine.

Cleaning the scanner

1 Lift the document cover (1). Clean the scanner glass (2) and the white plastic (3) with a soft lint-free cloth moistened with a non-flammable glass cleaner.

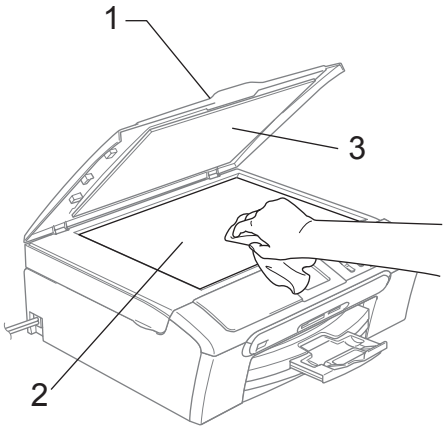

2 (DCP-560CN only) In the ADF unit, clean the white bar (1) and the glass strip (2) with a lint-free cloth moistened with a non-flammable glass cleaner.

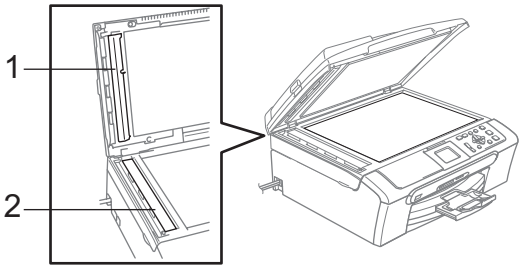

Note

In addition to cleaning the glass strip with a non-flammable glass cleaner, run your finger tip over the glass strip to see if you can feel anything on it. If you feel dirt or debris, clean the glass strip again concentrating on that area. You may need to repeat the cleaning process three or four times. To test, make a copy after each cleaning.

Cleaning the machine printer platen

WARNING

Unplug the machine from the electrical socket before cleaning the printer platen (1).

1. Using both hands, use the plastic tabs on both sides of the machine to lift the scanner cover until it locks securely into the open position.
2. Clean the machine printer platen (1) and the area around it, wiping off any scattered ink with a soft, dry, lint-free cloth.

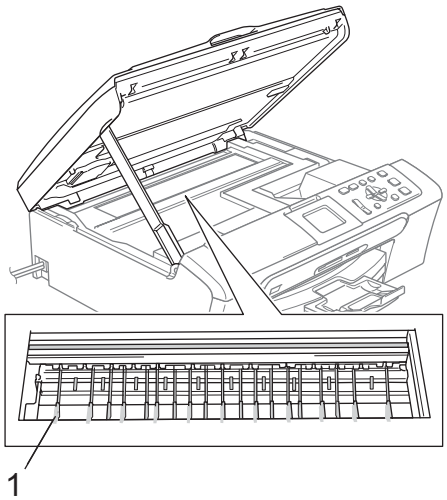

Cleaning the paper pick-up roller

1. Pull the paper tray completely out of the machine.
2. Unplug the machine from the electrical socket and remove the Jam Clear Cover (1).

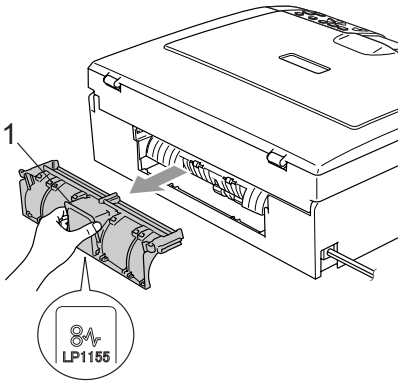

CAUTION

DO NOT place the jam clear cover face down as shown in the illustration. You may damage the cover and cause paper jams.

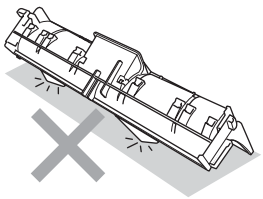

3. Clean the paper pick-up roller (1) with isopropyl alcohol on a cotton swab.

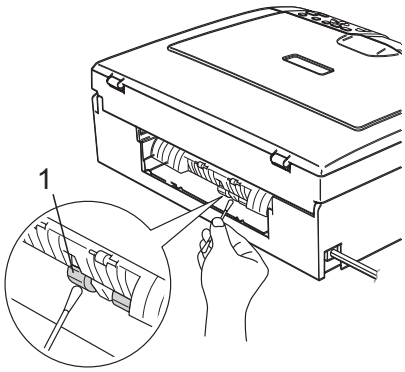

B

4 Put the Jam Clear Cover back on. Make sure the cover is set properly.

5 Re-connect the power cord.

6 Slowly push the paper tray completely back into the machine.

Cleaning the print head

To maintain print quality, the machine will automatically clean the print head when needed. You can start the cleaning process manually if there is a print quality problem.

Clean the print head and ink cartridges if you get a horizontal line in the text or graphics on your printed pages. You can clean Black only, three colours at a time (Yellow/Cyan/Magenta), or all four colours at once.

Cleaning the print head consumes ink. Cleaning too often uses ink unnecessarily.

CAUTION

DO NOT touch the print head. Touching the print head may cause permanent damage and may void the print head's warranty.

1 Press **Ink Management**.

2 Press ▲ or ▼ to choose `Cleaning`. Press **OK**.

3 Press ▲ or ▼ to choose `Black`, `Color` or `All`.
Press **OK**.
The machine cleans the print head. When cleaning is finished, the machine will go back to standby mode automatically.

Note

If you clean the print head at least five times and the print has not improved, call your Brother dealer.

Checking the print quality

If faded or streaked colours and text appear on your output, some of the nozzles may be clogged. You can check this by printing the Print Quality Check Sheet and looking at the nozzle check pattern.

1 Press **Ink Management**.

2 Press ▲ or ▼ to choose `Test Print`. Press **OK**.

3 Press ▲ or ▼ to choose `Print Quality`.
Press **OK**.

4 Press **Colour Start**.
The machine begins printing the Print Quality Check Sheet.

5 Check the quality of the four colour blocks on the sheet.

6 Do one of the following:

- If all lines are clear and visible, press **+** to choose `Yes`, and go to step ⑩.
- If you can see missing short lines as shown below, press **-** to choose `No`.

OK

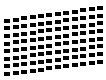

Poor

7 The LCD asks you if the print quality is OK for black and three colours.
Press **+** (`Yes`) or **-** (`No`).

8 The LCD asks you if you want to start cleaning.
Press **+** (`Yes`).
The machine starts cleaning the print head.

9 After cleaning is finished, press **Colour Start**.
The machine starts printing the Print Quality Check Sheet again and then returns to step ❺.

10 Press **Stop/Exit**.
If you repeat this procedure at least five times and the print quality is still poor, replace the ink cartridge for the clogged colour.
After replacing the ink cartridge, check the print quality. If the problem still exists, repeat the cleaning and test print procedures at least five times for the new ink cartridge. If ink is still missing, call your Brother dealer.

CAUTION

DO NOT touch the print head. Touching the print head may cause permanent damage and may void the print head's warranty.

Note

When a print head nozzle is clogged the printed sample looks like this.

→

After the print head nozzle is cleaned, the horizontal lines are gone.

Checking the print alignment

You may need to adjust the print alignment after transporting the machine if your printed text becomes blurred or images become faded.

1 Press **Ink Management**.

2 Press ▲ or ▼ to choose `Test Print`.
Press **OK**.

3 Press ▲ or ▼ to choose `Alignment`.
Press **OK**.

4 Press **Mono Start** or **Colour Start**.
The machine starts printing the Alignment Check Sheet.

5 Check the 600 dpi and 1200 dpi test prints to see if number 5 most closely matches number 0.

- If the number 5 samples of both the 600 dpi and 1200 dpi test prints are the best matches, press **+** (`Yes`) to finish Alignment Check, and go to step 8.
- If another test print number is a better match for either 600 dpi or 1200 dpi, press **-** (`No`) to choose it.

6 For 600 dpi, press ◀ or ▶ to choose the number of the test print that most closely matches the number 0 sample (1-8).
Press **OK**.

7 For 1200 dpi, press ◀ or ▶ to choose the number of the test print that most closely matches the number 0 sample (1-8).
Press **OK**.

8 Press **Stop/Exit**.

Checking the ink volume

You can check the ink that is left in the cartridge.

1 Press **Ink Management**.

2 Press ▲ or ▼ to choose `Ink Volume`.
Press **OK**.
The LCD shows the ink volume.

3 Press **Stop/Exit**.

Note

You can check the ink volume from your computer. (See *Printing* for Windows® or *Printing and Faxing* for Macintosh® in the Software User's Guide on the CD-ROM.)

B

Machine Information

Checking the serial number

You can see the machine's serial number on the LCD.

1. Press **Menu**.
2. Press ▲ or ▼ to choose `Machine Info.`.
   Press **OK**.
3. Press ▲ or ▼ to choose `Serial No.`.
   Press **OK**.
4. Press **Stop/Exit**.

Packing and shipping the machine

When you transport the machine, use the packing materials that came with your machine. If you do not pack the machine properly, you could void your warranty.

CAUTION

It is important to allow the machine to 'park' the print head after a print job. Listen carefully to the machine before unplugging it to make sure that all mechanical noise has stopped. Not allowing the machine to finish this parking process may lead to print problems and possible damage to the print head.

1. Open the ink cartridge cover.
2. Pull the lock release levers down and take out all the ink cartridges. (See *Replacing the ink cartridges* on page 75.)
3. Install the yellow protective part, lift each lock release lever and push it until it clicks, and then close the ink cartridge cover.

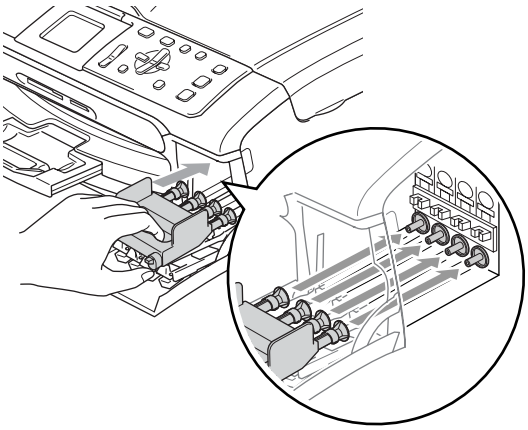

CAUTION

If you are not able to find the yellow protective part, DO NOT remove the ink cartridges before shipping. It is essential that the machine be shipped with either the yellow protective part or the ink cartridges in position. Shipping without them will cause damage to your machine and may void your warranty.

4 Unplug the machine from the electrical socket.

5 Using both hands, use the plastic tabs on both sides of the machine to lift the scanner cover until it locks securely into the open position. Then unplug the interface cable from the machine, if it is connected.

6 Lift the scanner cover to release the lock (1). Gently push the scanner cover support down (2) and close the scanner cover (3).

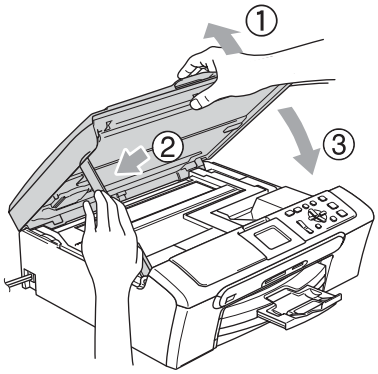

7 Wrap the machine in the bag and put it in the original carton with the original packing material.

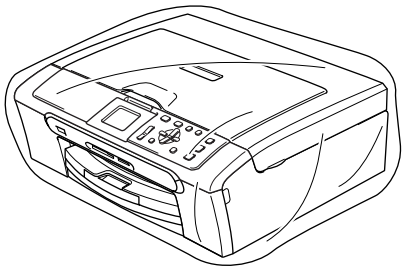

8 Pack the printed materials in the original carton as shown below. Do not pack the used ink cartridges in the carton.

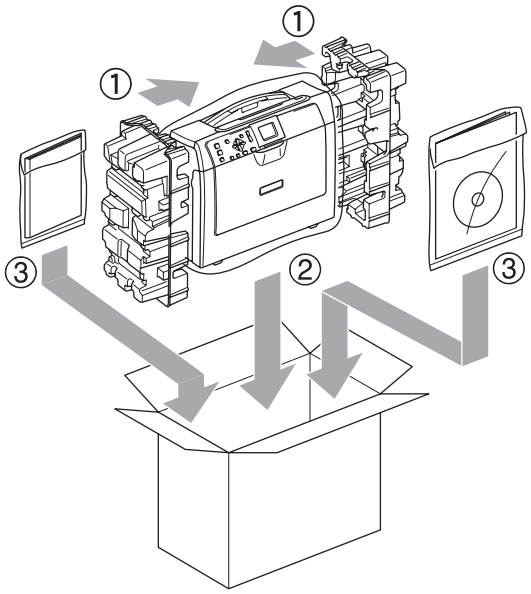

9 Close the carton and tape it shut.

B

C Menu and Features

On-screen programming

Your machine is designed to be easy to use with LCD on-screen programming using the menu keys. User-friendly programming helps you take full advantage of all the menu selections your machine has to offer.

Since your programming is done on the LCD, we have created step-by-step on-screen instructions to help you program your machine. All you need to do is follow the instructions as they guide you through the menu selections and programming options.

Menu table

You can program your machine by using the Menu table that begins on page 85. These pages list the menu selections and options.

Mode and menu keys

Photo Capture Scan Menu	Access the main menu, PhotoCapture menu or Scan menu.
▲ ▼	Scroll through the current menu level.
◄	Go back to the previous menu level.
►	Go to the next menu level.
OK	■ Go to the next menu level. ■ Accept an option.
Stop / Exit	Stop the current operation.

Menu table

The menu table will help you understand the menu selections and options that are found in the machine's programs. The factory settings are shown in Bold with an asterisk.

Menu (Menu)

Level 1	Level 2	Level 3	Options	Descriptions	Page
General Setup	**Paper Type**	—	**Plain Paper*** Inkjet Paper Brother Photo Other Photo Transparency	Sets the type of paper in the paper tray.	23
	Paper Size	—	Letter Legal **A4*** A5 10x15cm	Sets the size of the paper in the paper tray.	23
	LCD Settings	**LCD Contrast**	Light **Med*** Dark	Adjusts the contrast of the LCD.	24
		Backlight	**Light*** Dark	You can adjust the brightness of the LCD backlight.	24
		Dim Timer	Off 10 Secs 20 Secs **30 Secs***	You can set how long the LCD backlight stays on for after the last key press.	25
		Off Timer	**Off*** 1 Min 2 Mins 3 Mins 5 Mins 10 Mins 30 Mins	You can set how long the LCD stays on for after the last key press.	25
				The factory settings are shown in Bold with an asterisk.	

C

Level 1	Level 2	Level 3	Options	Descriptions	Page
LAN (DCP-560CN only)	**TCP/IP**	**BOOT Method**	**Auto*** Static RARP BOOTP DHCP	Chooses the BOOT method that best suits your needs.	See *Network User's Guide* on the CD-ROM
		IP Address	[000-255]. [000-255]. [000-255]. [000-255]	Enter the IP address.	
		Subnet Mask	[000-255]. [000-255]. [000-255]. [000-255]	Enter the Subnet mask.	
		Gateway	[000-255]. [000-255]. [000-255]. [000-255]	Enter the Gateway address.	
		Node Name	BRN_XXXXXX	You can see the current Node name.	
		WINS Config	**Auto*** Static	Chooses the WINS configuration mode.	
		WINS Server	(Primary) 000.000.000.000 (Secondary) 000.000.000.000	Specifies the IP address of the primary or secondary server.	
		DNS Server	(Primary) 000.000.000.000 (Secondary) 000.000.000.000	Specifies the IP address of the primary or secondary server.	
		APIPA	**On*** Off	Automatically allocates the IP address from the link-local address range.	
	The factory settings are shown in Bold with an asterisk.				

Level 1	Level 2	Level 3	Options	Descriptions	Page
LAN (DCP-560CN only) (Continued)	**Setup Misc.**	**Ethernet**	**Auto*** 100B-FD 100B-HD 10B-FD 10B-HD	Chooses the Ethernet link mode.	See *Network User's Guide* on the CD-ROM
	Factory Reset	—	Yes No	Restores all network settings to the factory default.	
Print Reports	**Help List**	—	—	Prints these lists and reports.	9
	User Settings	—	—		
	Network Config (DCP-560CN only)	—	—		
Machine Info.	**Serial No.**	—	—	Lets you check the serial number of your machine.	82
Initial Setup	**Date&Time**	—	—	Puts the date and time in your machine.	See *Quick Setup Guide*
	Local Language	—	**English*** French German Dutch Italian	Allows you to change the LCD language for your country.	72
	The factory settings are shown in Bold with an asterisk.				

C

Copy (Default display)

Level 1	Level 2	Level 3	Options	Descriptions	Page
Quality	—	—	Fast **Normal*** Best	Choose the Copy resolution for your type of document.	29
Enlarge/Reduce	—	—	50% 69% A4→A5 78% (DCP-350C) 78% LGL→LTR (DCP-560CN) 83% (DCP-350C) 83% LGL→A4 (DCP-560CN) 93% A4→LTR 97% LTR→A4 **100%*** 104% EXE→LTR 142% A5→A4 186% 10x15cm→LTR 198% 10x15cm→A4 200% Custom(25-400%)	You can choose the enlargement or reduction ratio for your type of document.	29
Paper Type	—	—	**Plain Paper*** Inkjet Paper Brother Photo Other Photo Transparency	Choose the paper type that matches the paper in the tray.	32
Paper Size	—	—	Letter Legal **A4*** A5 10x15cm	Choose the paper size that matches the paper in the tray.	32
Brightness	—	—	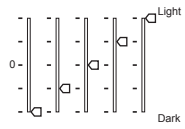	Adjusts the brightness of copies.	31
The factory settings are shown in Bold with an asterisk.					

Level 1	Level 2	Level 3	Options	Descriptions	Page
Contrast	—	—		Adjusts the contrast of copies.	31
Color Adjust	**Red**	—		Adjusts the amount of Red in copies.	31
	Green	—		Adjusts the amount of Green in copies.	
	Blue	—		Adjusts the amount of Blue in copies.	
Stack/Sort (DCP-560CN only)	—	—	**Stack*** Sort	You can choose to stack or sort multiple copies.	31
Page Layout	—	—	**Off(1 in 1)*** 2 in 1 (P) 2 in 1 (L) 4 in 1 (P) 4 in 1 (L) Poster(3 x 3)	You can make N in 1 or Poster copies.	30
Set New Default	—	—	Yes No	You can save your copy settings.	32
Factory Reset	—	—	Yes No	You can restore all settings to the factory settings.	32

The factory settings are shown in Bold with an asterisk.

C

PhotoCapture ( )

Level 1	Level 2	Level 3	Options	Descriptions	Page
View Photo(s)	—	—	See the print settings in the following table.	You can preview your photos on the LCD.	37
Print Index	Paper Type	—	**Plain Paper*** Inkjet Paper Brother Photo Other Photo	You can print a thumbnail page.	37
	Paper Size	—	Letter **A4***		
Print Photos	—	—	See the print settings in the following table.	You can print an individual image.	38
Photo Effects	Auto Correct Enhance Skin-Tone Enhance Scenery Remove Red-Eye Monochrome Sepia	—	See the print settings in the following table.	You can adjust your photos with these settings.	39
Search by Date	—	—	—	You can search your photos from date.	41
Print All Photos	—	—	See the print settings in the following table.	You can print all photos in your media card or USB Flash memory drive.	42
Slide show	—	—	—	The machine starts a Slide Show of your photos.	42
Trimming	—	—	—	You can trim your photo and print a part of the image.	43
	The factory settings are shown in Bold with an asterisk.				

Print Settings

Option 1	Option 2	Option 3	Option 4	Descriptions	Page
Print Quality (Does not appear for DPOF printing)	Normal **Photo***	—	—	Choose the print quality.	45
Paper Type	Plain Paper Inkjet Paper Brother Photo **Other Photo***	—	—	Choose the paper type.	45
Paper Size	Letter A4 **10x15cm*** 13x18cm	(When A4 or Letter is chosen) 10 x 8cm 13 x 9cm 15 x 10cm 18 x 13cm 20 x 15cm **Max. Size***	—	Choose the paper and print size.	45
Brightness (Does not appear when Photo Effects is chosen.)	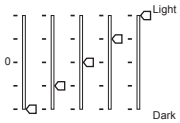	—	—	Adjusts the brightness.	46
Contrast (Does not appear when Photo Effects is chosen.)	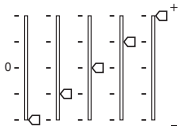	—	—	Adjusts the contrast.	46
Color Enhance (Does not appear when Photo Effects is chosen.)	On **Off***	White Balance	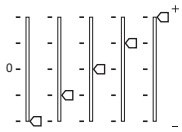	Adjusts the hue of the white areas.	46
		Sharpness	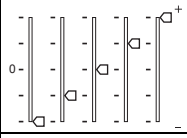	Enhances the detail of the image.	
		Color Density	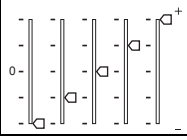	Adjusts the total amount of color in the image.	

The factory settings are shown in Bold with an asterisk.

C

Option 1	Option 2	Option 3	Option 4	Descriptions	Page
Cropping	**On*** Off	—	—	Crops the image around the margin to fit the paper size or print size. Turn this feature off if you want to print whole images or prevent unwanted cropping.	47
Borderless	**On*** Off	—	—	Expands the printable area to fit the edges of the paper.	47
Set New Default	Yes No	—	—	You can save your print settings.	47
Factory Reset	Yes No	—	—	You can restore all settings to the factory settings.	47
	The factory settings are shown in Bold with an asterisk.				

Scan ( )

Level 1	Option 1	Option 2	Option 3	Descriptions	Page
Scan to E-mail	—	—	—	You can scan a monochrome or a colour document into your E-mail application.	See *Software User's Guide on the CD-ROM*
Scan to Image	—	—	—	You can scan a colour picture into your graphics application.	
Scan to OCR	—	—	—	You can have your text document converted to an editable text file.	
Scan to File	—	—	—	You can scan a monochrome or a colour document into your computer.	
Scan to Media (When a memory card or USB Flash memory drive is inserted)	**150dpi Color*** 300dpi Color 600dpi Color 200x100dpi B/W 200dpi B/W	**PDF***/JPEG **PDF***/JPEG **PDF***/JPEG **TIFF***/PDF **TIFF***/PDF	—	You can choose the scan resolution and file format for your document.	48
	The factory settings are shown in Bold with an asterisk.				

D Specifications

General

Memory Capacity	32 MB	
ADF (automatic document feeder)	(DCP-560CN only)	
	Up to 10 pages	
	Recommended Environment for Best Results:	
	Temperature: 20°C - 30°C	
	Humidity: 50% - 70%	
	Paper: [80 gsm] A4 or Letter size	
Paper Tray	100 Sheets [80 gsm]	
Printer Type	Ink Jet	
Print Method	Black:	Piezo with 94 × 1 nozzle
	Colour:	Piezo with 94 × 3 nozzles
LCD (liquid crystal display)	50.8 mm Colour LCD	
Power Source	AC 220 to 240V 50/60Hz	
Power Consumption	(DCP-350C)	
	Off:	Average 5.5 W
	Standby:	Average 7 W
	Operating:	Average 21 W
	(DCP-560CN)	
	Off:	Average 4 W
	Standby:	Average 8 W
	Operating:	Average 35 W

Dimensions

(DCP-350C)

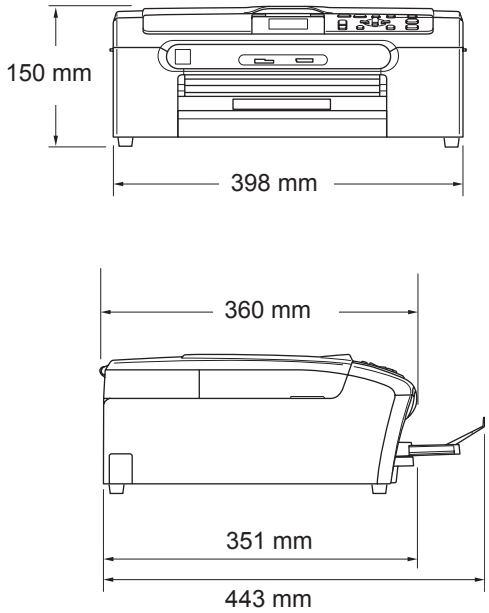

(DCP-560CN)

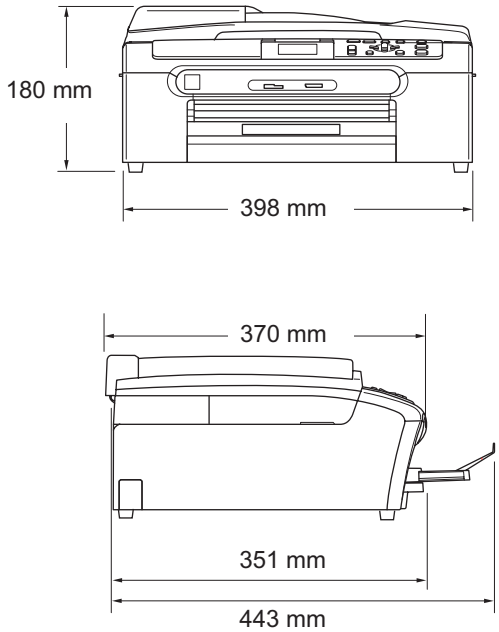

Weight	(DCP-350C)	
	7.3 kg	
	(DCP-560CN)	
	8.2 kg	
Noise	Operating:	50 dB or less [1]
Temperature	Operating:	10 to 35°C
	Best Print Quality:	20 to 33°C
Humidity	Operating:	20 to 80% (without condensation)
	Best Print Quality:	20 to 80% (without condensation)

[1] This depends on printing conditions.

Print media

Paper Input	**Paper Tray** ■ Paper type: Plain paper, inkjet paper (coated paper), glossy paper [2], transparencies [1] [2] and envelopes ■ Paper size: Letter, Legal, Executive, A4, A5, A6, JIS B5, envelopes (commercial No.10, DL, C5, Monarch, JE4), Photo 2L, Index card and Post card [3]. Width: 89 mm (3.5 in.) -216 mm (8.5 in.) Height: 127 mm (5.0 in.) - 356 mm (14.0 in.) For more details, see *Paper weight, thickness and capacity* on page 15. ■ Maximum paper tray capacity: Approx. 100 sheets of 80 gsm (20 lb) plain paper **Photo Paper Tray** ■ Paper type: Plain paper, inkjet paper (coated paper) and glossy paper [2] ■ Paper size: Photo 10×15cm and Photo L. Width: 89 mm (3.5 in.) -101.6 mm (4.0 in.) Height: 127 mm (5.0 in.) - 152.4 mm (6.0 in.) ■ Maximum paper tray capacity: Approx. 20 sheets
Paper Output	Up to 50 sheets of A4 plain paper (face up print delivery to the output paper tray) [2]

1 Use only transparencies recommended for inkjet printing.

2 For glossy paper or transparencies, we recommend removing printed pages from the output paper tray immediately after they exit the machine to avoid smudging.

3 See *Paper type and size for each operation* on page 14.

Copy

Colour/Monochrome	Yes/Yes
Document Size	ADF Width (DCP-560CN): 148 mm to 215.9 mm
	ADF Height (DCP-560CN): 148 mm to 355.6 mm
	Scanner Glass Width: Max. 215.9mm
	Scanner Glass Height: Max. 297 mm
	Copy Width: Max. 210 mm
Copy Speed	Monochrome: Up to 22 pages/minute (A4 paper) [1]
	Colour: Up to 20 pages/minute (A4 paper) [1]
Multiple Copies	Stacks up to 99 pages
	Sorts up to 99 pages (DCP-560CN only)
Enlarge/Reduce	25% to 400% (in increments of 1%)
Resolution	(Monochrome) ■ Scans up to 600×1200 dpi ■ Prints up to 1200×1200 dpi (Colour) ■ Scans up to 600×1200 dpi ■ Prints up to 600×1200 dpi

[1] Based on Brother standard pattern (Fast mode/Stack Copy). Copy speeds vary with the complexity of the document.

PhotoCapture Center™

Compatible Media [1]	CompactFlash® (Type I only) (Microdrive™ is not compatible) (Compact I/O cards such as Compact LAN card and Compact Modem card are not supported.) Memory Stick® Memory Stick Pro™ Memory Stick Duo™ with adapter MultiMediaCard™ SecureDigital miniSD™ with adapter xD-Picture Card™ [2] USB Flash memory drive [3]
Resolution	Up to 1200 × 2400 dpi
File Extension	DPOF, EXIF, DCF
(Media Format)	Photo Print: JPEG [4]
(Image Format)	Scan to Media: JPEG, PDF (Colour) TIFF, PDF (Black)
Number of Files	Up to 999 files (The folder inside memory cards or USB Flash memory drive is also counted)
Folder	File must be stored in the 4th folder level of the memory card or USB Flash memory drive.
Borderless	Letter, A4, Photo 10×15 cm, Photo 13×18 cm [5]

1 Memory cards, adapters and USB Flash memory drive are not included.

2 xD-Picture Card™ Conventional Card from 16MB to 512MB
xD-Picture Card™ Type M from 256MB to 2GB
xD-Picture Card™ Type H from 256MB to 2GB

3 USB 2.0 standard
USB Mass Storage standard from 16 MB to 8 GB
Support format: FAT12/FAT16/FAT32

4 Progressive JPEG format is not supported.

5 See *Paper type and size for each operation* on page 14.

PictBridge

Compatibility	Supports the Camera & Imaging Products Association PictBridge standard CIPA DC-001. Visit http://www.cipa.jp/pictbridge for more information.
Interface	USB direct interface

Scanner

Colour/Monochrome	Yes/Yes
TWAIN Compliant	Yes (Windows® 2000 Professional/XP/XP Professional x64 Edition/Windows Vista™)
	Mac OS® X 10.2.4 or greater
WIA Compliant	Yes (Windows® XP [1]/Windows Vista™)
Colour Depth	36 bit colour Processing (Input)
	24 bit colour Processing (Output)
	(Actual Input: 30 bit colour/Actual Output: 24 bit colour)
Resolution	Up to 19200 × 19200 dpi (interpolated) [2]
	Up to 600 × 2400 dpi (optical)
Scanning Speed	Colour: up to 6.02 sec.
	Monochrome: up to 3.82 sec.
	(A4 size at 100 × 100 dpi)
Document Size	ADF Width (DCP-560CN): 148 mm to 215.9 mm
	ADF Height (DCP-560CN): 148 mm to 355.6 mm
	Scanner Glass Width: Max. 215.9 mm
	Scanner Glass Height: Max. 297 mm
Scanning Width	210 mm
Greyscale	256 levels

[1] Windows® XP in this User's Guide includes Windows® XP Home Edition, Windows® XP Professional, and Windows® XP Professional x64 Edition.

[2] Maximum 1200 × 1200 dpi scanning when using the WIA Driver for Windows® XP and Windows Vista™ (resolution up to 19200 × 19200 dpi can be chosen by using the Brother scanner utility)

Printer

Printer Driver	Windows® 2000 Professional/XP/XP Professional x64 Edition/Windows Vista™ driver supporting Brother Native Compression mode
	Mac OS® X 10.2.4 or greater: Brother Ink Driver
Resolution	Up to 1200 × 6000 dpi
	1200 × 2400 dpi
	1200 × 1200 dpi
	600 × 600 dpi
	600 × 300 dpi
	600 × 150 dpi
Print Speed	Monochrome: Up to 30 pages/minute [1]
	Colour: Up to 25 pages/minute [1]
Printing Width	204 mm (210 mm) [2]
Disk-Based Fonts	35 TrueType (Windows® only)
Borderless	Letter, A4, A6, Photo 10×15cm, Index Card, Photo L, Photo 2L, Post Card [3]

[1] Based on Brother standard pattern.
A4 size in draft mode.

[2] When you set the Borderless feature to On.

[3] See *Paper type and size for each operation* on page 14.

Interfaces

USB	A USB 2.0 interface cable that is no longer than 2.0 m. [1] [2]
LAN cable [3] (DCP-560CN only)	Ethernet UTP cable category 5 or greater.

1 Your machine has a full-speed USB 2.0 interface. This interface is compatible with Hi-Speed USB 2.0; however, the maximum data transfer rate will be 12 Mbits/s. The machine can also be connected to a computer that has a USB 1.1 interface.

2 Third party USB ports are not supported for Macintosh®.

3 See the *Network User's Guide* on the CD-ROM for detailed network specification.

Computer requirements

SUPPORTED OPERATING SYSTEMS AND SOFTWARE FUNCTIONS						
Operating Systems		**Supported Functions**	**Interface**	**Minimum Processor**	**Recommended RAM**	**Required HARD Disk Space**
Windows® [1, 4]	2000 Professional	Printing Scanning, Removable Disk [3]	USB 10/100 BASE-TX (DCP560CN only)	Intel® Pentium® II or AMD equivalent	256MB	480MB
	XP Home XP Professional					
	XP Professional x64 Edition			AMD Opteron™ AMD Athlon™ 64 Intel® Xeon™ with Intel® EM64T Intel® Pentium® 4 with Intel® EM64T	512MB	
	Windows Vista™			1 GHz 32-bit (x86) or 64-bit (x64) processor	1GB	1.1GB
Mac® [5]	OS X 10.2.4 or greater	Printing Scanning, Removable Disk [3]	USB [2] 10/100 BASE-TX (DCP560CN only)	PowerPC G4/G5, Intel® Core™ Solo/Duo PowerPC G3 350MHz	256MB	480MB

Conditions:

1 Microsoft® Internet Explorer 5.5 or greater.

2 Third party USB ports are not supported.

3 Removable disk is a function of PhotoCapture Center™.

4 PaperPort™ 11SE supports Microsoft® SP4 or higher for Windows® 2000 and SP2 or higher for XP.

5 Presto!® PageManager® on the CD-ROM supports Mac OS X 10.3.9 or higher. For Mac OS X 10.2.4-10.3.8 Presto!® PageManager® is available as a download from the Brother Solutions Center.

For the latest driver updates, visit www.brother.com. All trademarks, brand and product names are property of their respective companies.

Consumable items

Ink	The machine uses individual Black, Yellow, Cyan and Magenta ink cartridges that are separate from the print head assembly.
Service Life of Ink Cartridge	**Replacement Ink Cartridges** The first time you install the ink cartridges the machine will use extra ink to fill the ink delivery tubes. This is a one-time process that enables high quality printing. Afterward, replacement ink cartridges will print the specified number of pages. Black - Approximately 500 pages at 5% coverage Yellow, Cyan and Magenta - Approximately 400 pages at 5% coverage ■ The above figures assume continuous printing at a resolution of 600 x 600 dpi in normal mode after installing new ink cartridge. ■ The number of pages a cartridge will print may change depending on how often you use the machine and how many pages you print with each use. ■ The machine will automatically and periodically clean the print head assembly, a process that uses a small amount of ink. ■ When the machine identifies a cartridge as empty there may be a small amount of ink left in it. This is necessary to prevent air from drying out and damaging the print head assembly.
Replacement Consumables	<Black> LC57BK, <Yellow> LC57Y, <Cyan> LC57C, <Magenta> LC57M

What is Innobella™?

Innobella™ is a range of genuine consumables offered by Brother. The name "Innobella™" derives from the words "Innovation" and "Bella" (meaning "Beautiful" in Italian) and is a representation of the "innovative" technology providing you with "beautiful" and "long lasting" print results.

When you print photo images, Brother recommends Innobella™ glossy photo paper (BP61GL series) for high quality. Brilliant prints are made easier with Innobella™ Ink and paper.

D

Network (LAN) (DCP-560CN only)

LAN	You can connect your machine to a network for Network Printing and Network Scanning. Also included is Brother BRAdmin Light [1] Network Management software.
Support for	Windows® 2000 Professional/XP/XP Professional x64 Edition/Windows Vista™
	Mac OS® X 10.2.4 or greater
	Ethernet 10/100 BASE-TX Auto Negotiation (Wired LAN)
Protocols	TCP/IP
	ARP, RARP, BOOTP, DHCP, APIPA (Auto IP), NetBIOS Name Resolution, WINS DNS Resolver, LPR/LPD, Custom Raw Port/Port9100, FTP Server, mDNS, TELNET, SNMP, TFTP

[1] If you require more advanced printer management, use the latest Brother BRAdmin Professional utility version that is available as a download from http://solutions.brother.com.

E Glossary

This is a comprehensive list of features and terms that appear in Brother manuals. Availability of these features depends on the model you purchased.

ADF (automatic document feeder)

The document can be placed in the ADF and scanned one page at a time automatically.

Brightness

Changing the Brightness makes the whole image lighter or darker.

Contrast

Setting to compensate for dark or light documents, by making copies of dark documents lighter and light documents darker.

Colour Enhancement

Adjusts the colour in the image for better print quality by improving sharpness, white balance and colour density.

Greyscale

The shades of grey available for copying and scanning.

Help list

A printout of the complete Menu table that you can use to program your machine when you do not have the User's Guide with you.

Innobella™

Innobella™ is a range of genuine consumables offered by Brother.For best quality results Brother recommends Innobella™ Ink and Paper.

LCD (liquid crystal display)

The display screen on the machine that shows interactive messages during On-Screen Programming.

Menu mode

Programming mode for changing your machine's settings.

OCR (optical character recognition)

The bundled ScanSoft™ PaperPort™ 11SE with OCR or

Presto!® PageManager® software application converts an image of text to text you can edit.

PhotoCapture Center™

Allows you to print digital photos from your digital camera at high resolution for photo quality printing.

PictBridge

Allows you to print photos directly from your digital camera at high resolution for photo quality printing.

Scanning

The process of sending an electronic image of a paper document into your computer.

Scan to Media

You can scan a monochrome or colour document into a memory card or USB Flash memory drive. Monochrome images can be in TIFF or PDF file format and colour images may be in PDF or JPEG file format.

Temporary settings

You can choose certain options for each copy without changing the default settings.

User Settings

A printed report that shows the current settings of the machine.

F Index

A

ADF (automatic document feeder) 10
Apple® Macintosh®
  See Software User's Guide on the CD-ROM. .....

C

Cleaning
  paper pick-up roller 79
  print head 80
  printer platen 79
  scanner 78
Consumable items 103
Control panel overview 6
ControlCenter
  See Software User's Guide on the CD-ROM. .....
Copy
  brightness 31
  colour saturation 31
  contrast 31
  enlarge/reduce 29
  multiple 28
  page layout (N in 1, poster) 30
  paper size 32
  paper type 32
  quality 29
  Return to default 32
  set new default 32
  single 28
  sort (ADF only) 31
  using ADF 10
  using scanner glass 11

D

Direct printing
  from a non-PictBridge camera 52
  from a PictBridge camera 50
Document
  loading 10, 11

E

Envelopes 14, 18, 19, 20
Error messages on LCD 70
  Ink Empty 70
  Near Empty 71
  No Paper Fed 71
  Out of Memory 71
  Unable to Clean 71
  Unable to Init. 71
  Unable to Print 71
  Unable to Scan 71

G

Greyscale 99

H

Help
  LCD messages 84
    using Menu keys 84
  Menu Table 84, 85

I

Ink cartridges
  checking ink volume 81
  ink dot Counter 75
  replacing 75
Ink key 7
Innobella™ 103

J

Jams
  document 72
  paper 73

L

LCD (liquid crystal display) 84
  Brightness 24
  Contrast 24
  Dim Timer 25
  Help List 9
  Language 72
  Off Timer 25

M

Macintosh®
See Software User's Guide on the CD-ROM. .....
Maintenance, routine
replacing ink cartridges 75
Menu Table 84
Mode, entering
PhotoCapture 7
Scan 7

N

Network
Printing
See Network User's Guide on the CD-ROM. .....
Scanning
See Software User's Guide on the CD-ROM. .....
Number of Copies key 6

O

On/Off key 7
Out of Memory message 71

P

Paper 12, 95
capacity 15
loading 16, 18, 20
printable area 22
size 14, 23
size of document 10
type 14, 23
PaperPort™ 11SE with OCR
See Software User's Guide on the CD-ROM and Help in the PaperPort™ 11SE application to access How-to-Guides. .....
Photo Paper Tray 20
PhotoCapture Center™
Adding Effect 39
Borderless 47
CompactFlash® 34
Cropping 47
DPOF printing 43
from PC
See Software User's Guide on the CD-ROM. .....
Memory Stick Pro™ 34
Memory Stick® 34
MultiMediaCard™ 34
Photo Effects
Auto Correct 39
Enhance Scenery 40
Enhance Skin-Tone 39
Monochrome 41
Remove Red-Eye 40
Sepia 41
Preview photos 37
Print settings
Brightness 46
Colour enhancement 46
Contrast 46
Paper type & size 45
Quality 44, 45
Return to factory setting 47
Set new default 47
Printing
all photos 42
index 37
photos 38
Scan to memory card 48
Scan to USB flash memory 48
Search from Date 41
SecureDigital 34
Slide-Show 42
specifications 97
Trimming 43
xD-Picture Card™ 34
PictBridge
DPOF Printing 51
Presto!® PageManager®
See Help in Presto!® PageManager® to access the User's Guide. .....
Print
area 22
difficulties 66
drivers 100
improving quality 80
on small paper 21
paper jams 73
reports 9
resolution 100
specifications 100
Programming your machine 84

F

R

Reducing copies 29
Reports
  Help List 9
  how to print 9
  User Settings 9
Resolution
  copy 96
  print 100
  scan 99

S

Safety Instructions 62
Scannable area 11
Scanner glass
  cleaning 78
  using 11
Scanning
  See Software User's Guide on the CD-ROM. .....
Serial Number
  how to find..... See inside front cover
Shipping the machine 82

T

Transparencies 12, 13, 15, 95
Troubleshooting 66
  checking ink volume 81
  document jam 72
  error messages on LCD 70
  if you are having difficulty
    copying 68
    Network 69
    PhotoCapture Center™ 69
    printing 66
    scanning 68
    software 68
  paper jam 73
  print quality 80

W

Windows®
  See Software User's Guide on the CD-ROM. .....

For Australia Only:

Warranty & Repair – For details about warranty on your Brother Product, the details are listed on the following link: **www.brother.com.au** under Warranty. For warranty service (repair) of your Brother product you will need to retain a copy of your sales docket and contact the Support Centre for location of the nearest Authorised Warranty Centre (AWC)

Support – For technical support for your Brother Product other than what you can resolve through the User's Guide, please visit our website or our solutions website for FAQs/Troubleshooting, Drivers & Software, or contact the Product Support Centre for any technical or customer care/support enquiry.

Product Support Centre: Australia

Brother International (Aust) Pty Ltd

Phone: 02 8875 6000

Fax: 02 9870 7223

Email: **productsupport@brother.com.au**

Web Site: **www.brother.com.au**

Solutions Site: **http://solutions.brother.com**

Visit us on the World Wide Web
http://www.brother.com

This machine is approved for use in the country of purchase only. Local Brother companies or their dealers will only support machines purchased in their own countries.

ARL/ASA/NZ