brother®

BASIC USER'S GUIDE

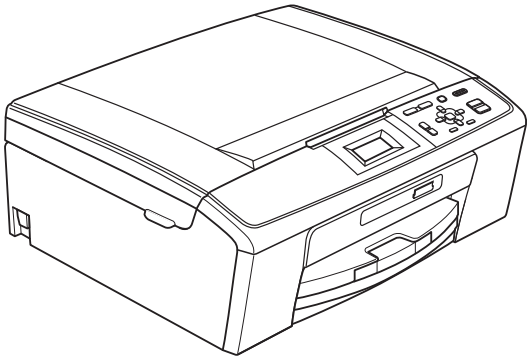

DCP-J125
DCP-J315W

Version A

ARL/ASA/NZ/SAF

If you need to call Customer Service

Please complete the following information for future reference:

Model Number: DCP-J125 and DCP-J315W
(Circle your model number)

Serial Number: [1] _____

Date of Purchase: _____

Place of Purchase: _____

[1] The serial number is on the back of the unit. Retain this User's Guide with your sales receipt as a permanent record of your purchase, in the event of theft, fire or warranty service.

Register your product on-line at

http://www.brother.com/registration/

© 2010 Brother Industries, Ltd.

User's Guides and where do I find it?

Which manual?	What's in it?	Where is it?
Safety and Legal	Please read the Safety Instructions before you set up your machine.	Printed / In the box
Quick Setup Guide	Read this Guide first. Follow the instructions for setting up your machine and installing the drivers and software for the operating system and connection type you are using.	Printed / In the box
Basic User's Guide	Learn the basic Copy, Scan and PhotoCapture Center™ operations and how to replace consumables. See troubleshooting tips.	Printed / In the box
Advanced User's Guide	Learn more advanced operations: Copy, printing reports and performing routine maintenance.	PDF file / Documentation CD-ROM
Software User's Guide	Follow these instructions for Printing, Scanning, Network Scanning, PhotoCapture Center™, and using the Brother ControlCenter utility.	PDF file / Documentation CD-ROM
Network User's Guide (DCP-J315W only)	This Guide provides more advanced information for configuring the Wireless network connections. In addition, find information about network utilities, network printing, troubleshooting tips and supported network specifications.	PDF file / Documentation CD-ROM

Table of Contents
(BASIC USER'S GUIDE)

1 General information 1

Using the documentation 1
Symbols and conventions used in the documentation 1
Accessing the Advanced User's Guide, Software User's Guide and Network User's Guide 1
Viewing Documentation 1
Accessing Brother Support (Windows®) 3
Accessing Brother Support (Macintosh) 3
Control panel overview 4
LCD display indications 5
Basic Operations 6
Warning LED indications 6
LCD display 7
Setting the backlight brightness 7

2 Loading paper 8

Loading paper and other print media 8
Loading envelopes and postcards 10
Removing small printouts from the machine 12
Printable area 13
Paper settings 14
Paper Type 14
Paper Size 14
Acceptable paper and other print media 15
Recommended print media 15
Handling and using print media 16
Choosing the right print media 17

3 Loading documents 19

How to load documents 19
Using the scanner glass 19
Scannable area 20

4 Making copies 21

How to copy 21
Stop copying 21
Copy settings 21
Paper options 22

5 Printing photos from a memory card 23

PhotoCapture Center™ operations 23
Using a memory card 23
Getting started 24
Print Images 26
View Photos 26
PhotoCapture Center™ print settings 26
How to scan to a memory card 27

6 How to print from a computer 29

Printing a document 29

7 How to scan to a computer 30

Scanning a document 30
Scanning using the scan key 30
Scanning using a scanner driver 30

A Routine maintenance 31

Replacing the ink cartridges 31
Cleaning and checking the machine 34
Cleaning the scanner glass 34
Cleaning the paper pick-up rollers 34
Cleaning the print head 35
Checking the print quality 35
Checking the print alignment 36

B Troubleshooting 37

Error and Maintenance messages 37
Error animation 40
Printer jam or paper jam 40
Troubleshooting 42
If you are having difficulty with your machine 42
Machine Information 47
Checking the serial number 47
Reset functions 47
How to reset the machine 47

C Menu and features 48

On-screen programming 48
Menu table 49
Entering Text 59
Inserting special characters 59
Making corrections 59

D Specifications 60

General 60
Print media 62
Copy 63
PhotoCapture Center™ 64
Scanner 65
Printer 66
Interfaces 67
Computer requirements 68
Consumable items 69
Network (LAN) (DCP-J315W only) 70

E Index 71

Table of Contents
(ADVANCED USER'S GUIDE)

The *Advanced User's Guide* explains the following features and operations.

You can view the *Advanced User's Guide* on the Documentation CD-ROM.

1 General setup

Memory storage
Sleep Mode
LCD display

2 Printing reports

Reports

3 Making copies

Copy settings

4 Printing photos from a memory card

PhotoCapture Center™ operations
Print Images
PhotoCapture Center™ print settings
Scan to a memory card

A Routine maintenance

Cleaning and checking the machine
Packing and shipping the machine

B Glossary

C Index

1 General information

Using the documentation

Thank you for buying a Brother machine! Reading the documentation will help you make the most of your machine.

Symbols and conventions used in the documentation

The following symbols and conventions are used throughout the documentation.

Bold	Bold typeface identifies specific buttons on the machine's control panel, or on the computer screen.
Italics	Italicized typeface emphasizes an important point or refers you to a related topic.
`Courier New`	Text in the Courier New font identifies messages on the LCD of the machine.

WARNING

WARNING indicates a potentially hazardous situation which, if not avoided, could result in death or serious injuries.

CAUTION

CAUTION indicates a potentially hazardous situation which, if not avoided, may result in minor or moderate injuries.

IMPORTANT

IMPORTANT indicates a potentially hazardous situation which may result in property-damage-only accidents or loss of product functionality.

Notes tell you how you should respond to a situation that may arise or give tips about how the operation works with other features.

Electrical Hazard icons alert you to possible electrical shock.

Accessing the Advanced User's Guide, Software User's Guide and Network User's Guide

This Basic User's Guide does not contain all the information about the machine such as how to use the advanced features for Copy, PhotoCapture Center™, Printer, Scanner and Network. When you are ready to learn detailed information about these operations, read the **Advanced User's Guide**, **Software User's Guide** and **Network User's Guide** that are on the Documentation CD-ROM.

Viewing Documentation

1. Turn on your computer. Insert the Documentation CD-ROM into your CD-ROM drive.

Note

(Windows® users)
If the screen does not appear automatically, go to **My Computer (Computer)**, double-click the CD-ROM icon, and then double-click **index.html**.

2. (Macintosh users)
Double-click the CD-ROM icon, and then double-click **index.html**.

3 Click your country.

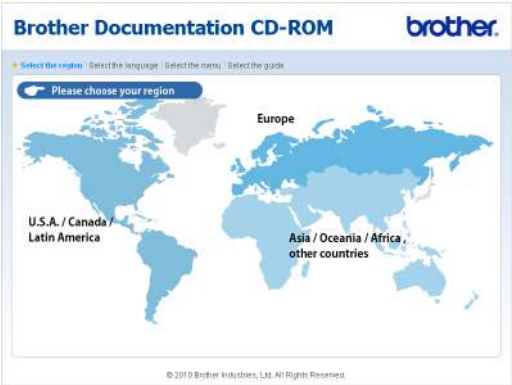

4 Point to your language, point to **View Guide**, and then click the guide you want to read.

Note

- (Windows® users only)
  Your web browser may display a yellow bar at the top of the page that contains a security warning about Active X controls. For the page to display correctly you must click on the bar, click **Allow Blocked Content**, then click **Yes** in the Security Warning dialog box.
- (Windows® users only) [1]
  For faster access, you can copy all user documentation in PDF format to a local folder on your computer. Point to your language, then click **Copy to local disk**.

[1] Microsoft® Internet Explorer® 6.0 or greater.

How to find Scanning instructions

There are several ways you can scan documents. You can find the instructions as follows:

Software User's Guide

- *Scanning*
- *ControlCenter*
- *Network Scanning* (DCP-J315W only)

How to find Network setup instructions (DCP-J315W only)

Your machine can be connected to a wireless network. You can find basic setup instructions in the Quick Setup Guide. If your wireless access point or router supports Wi-Fi Protected Setup or AOSS™, you can also follow the steps in the Quick Setup Guide. For more information about network setup please see the *Network User's Guide* on the Documentation CD-ROM.

Accessing Brother Support (Windows®)

You can find all the contacts you will need, such as Web support (Brother Solutions Center) on the Installation CD-ROM.

- Click **Brother Support** on the **Top Menu**. The following screen will appear:

- To access our website (http://www.brother.com), click **Brother Home Page**.
- For the latest news and product support information (http://solutions.brother.com/), click **Brother Solutions Center**.
- To visit our website for original Brother Supplies (http://www.brother.com/original/), click **Supplies Information**.
- To access the Brother CreativeCenter (http://www.brother.com/creativecenter/) for FREE photo projects and printable downloads, click **Brother CreativeCenter**.
- To return to the **Top Menu**, click **Back** or if you have finished, click **Exit**.

Accessing Brother Support (Macintosh)

You can find all the contacts you will need, such as Web support (Brother Solutions Center) on the Installation CD-ROM.

- Double-click the **Brother Support** icon. The following screen will appear:

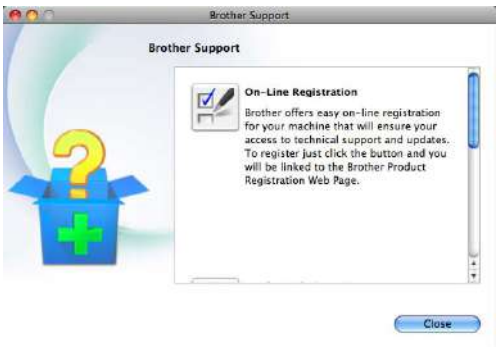

- To register your machine from the Brother Product Register Page (http://www.brother.com/registration/), click **On-Line Registration**.
- For the latest news and product support information (http://solutions.brother.com/), click **Brother Solutions Center**.
- To visit our website for original Brother Supplies (http://www.brother.com/original/), click **Supplies Information**.

Control panel overview

The **DCP-J125** and **DCP-J315W** have the same control panel keys.

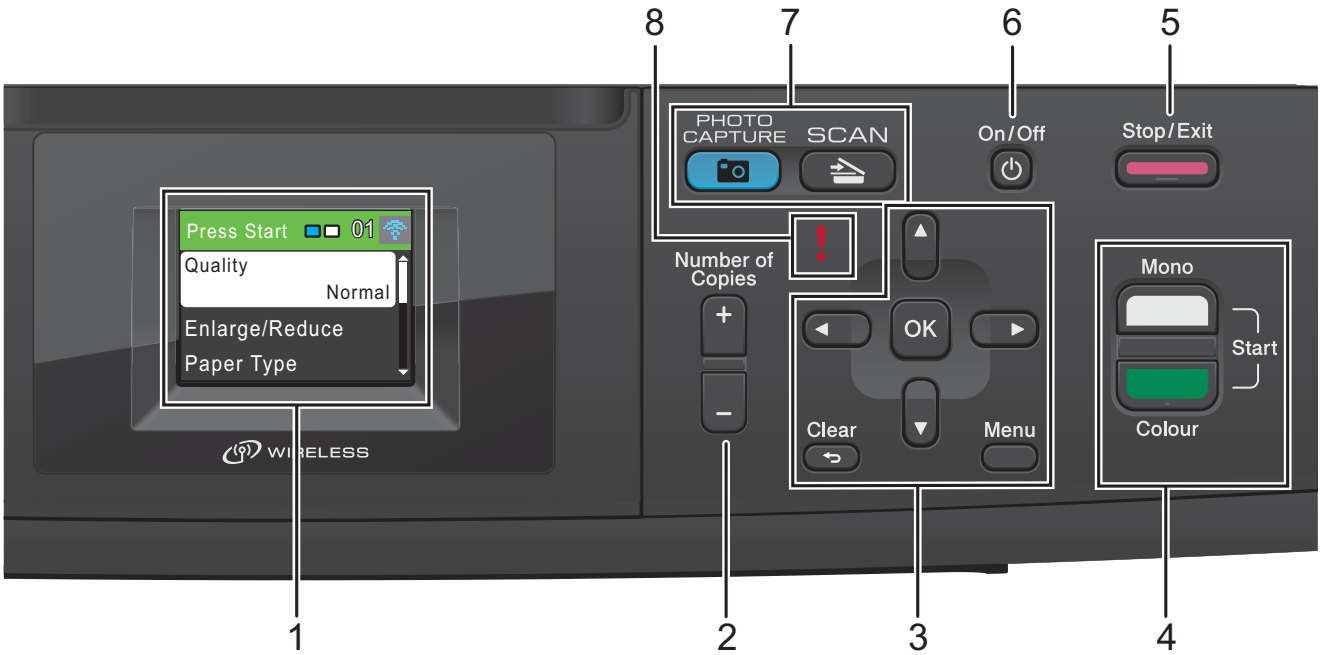

1 LCD (Liquid Crystal Display)

Displays messages on the screen to help you set up and use your machine.

2 Number of Copies

Use this key to make multiple copies.

3 Menu keys:

- ◀ or ▶

  Press ◀ or ▶ to move the selected area left or right on the LCD.

- ▲ or ▼

  Press ▲ or ▼ to scroll through the menus and options.

- **Clear**

  Press to go back to the previous menu level.

- **Menu**

  Lets you access the main menu to program the machine.

- **OK**

  Lets you confirm a selection.

4 Start keys:

- **Mono Start**

  Lets you start making copies in monochrome. Also lets you start a scanning operation (in colour or mono, depending on the scanning setting in the ControlCenter software).

- **Colour Start**

  Lets you start making copies in full colour. Also lets you start a scanning operation (in colour or mono, depending on the scanning setting in the ControlCenter software).

5 Stop/Exit

Stops an operation or exits from a menu.

6 On/Off

You can turn the machine on and off.

Press **On/Off** to turn the machine on.

Press and hold down **On/Off** to turn the machine off. The LCD will show Shutting Down and will stay on for a few seconds before going off.

If you turn the machine off, it will still periodically clean the print head to maintain print quality. To prolong print head life, provide the best ink cartridge economy, and maintain print quality, you should keep your machine connected to the power at all times.

7 Mode keys:

- **SCAN**

  Lets you access Scan mode.

- **PHOTO CAPTURE**

  Lets you access PhotoCapture Center™ mode.

8 Warning LED

Turns red and blinks when the LCD displays an error or an important status message.

Note

Most of the illustrations in this User's Guide show the DCP-J315W.

LCD display indications

The LCD display shows the mode the machine is in, the current settings, and the available ink volume.

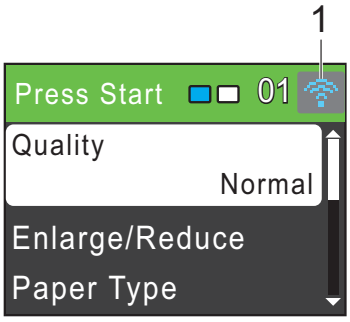

1 Wireless Status (DCP-J315W only)

A four level indicator shows the current wireless signal strength if you are using a wireless connection.

0 Max

The warning icon appears when there is an error or a maintenance message. For details, see *Error and Maintenance messages* on page 37.

Basic Operations

The following steps show how to change a setting in the machine. In this example the Paper Type setting is changed from `Plain Paper` to `Inkjet Paper`.

1. Press **Menu**.
2. Press ▲ or ▼ to choose `General Setup`.

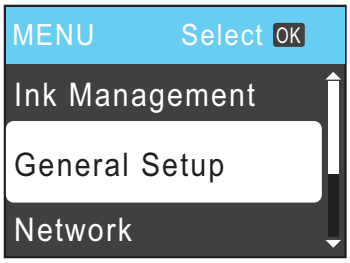

   Press **OK**.

3. Press ▲ or ▼ to choose `Paper Type`. Press **OK**.
4. Press ▲ or ▼ to choose `Inkjet Paper`. Press **OK**.
   You can see the current setting on the LCD:

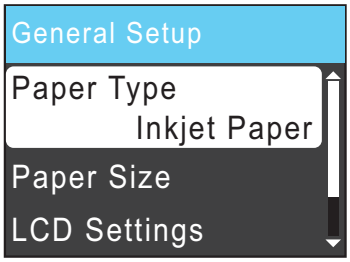

5. Press **Stop/Exit**.

Warning LED indications

The Warning LED (light emitting diode) is a light that shows the status of the machine, as shown in the table.

LED	DCP status	Description
! Off	Ready	The DCP is ready for use.
! Red	Cover open	The cover is open. Close the cover. (See *Error and Maintenance messages* on page 37.)
	Cannot Print	Replace the ink cartridge with a new one. (See *Replacing the ink cartridges* on page 31.)
	Paper error	Put paper in the tray or clear the paper jam. Check the LCD message. (See *Error and Maintenance messages* on page 37.)
	Other messages	Check the LCD message. (See *Error and Maintenance messages* on page 37.)

LCD display

Setting the backlight brightness

If you are having difficulty reading the LCD, try changing the brightness setting.

1. Press **Menu**.
2. Press ▲ or ▼ to choose `General Setup`.
   Press **OK**.
3. Press ▲ or ▼ to choose `LCD Settings`.
   Press **OK**.
4. Press ▲ or ▼ to choose `Backlight`.
   Press **OK**.
5. Press ▲ or ▼ to choose `Light`, `Med` or `Dark`.
   Press **OK**.
6. Press **Stop/Exit**.

2 Loading paper

Loading paper and other print media

1. If the paper support flap is open, close it, and then close the paper support. Pull the paper tray completely out of the machine.

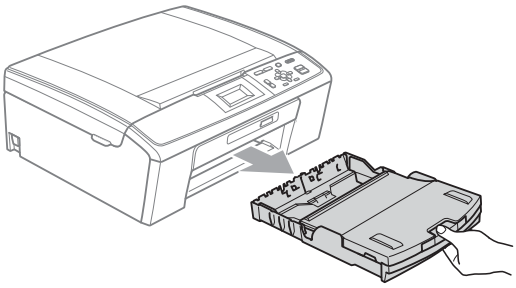

2. Lift the output paper tray cover (1).

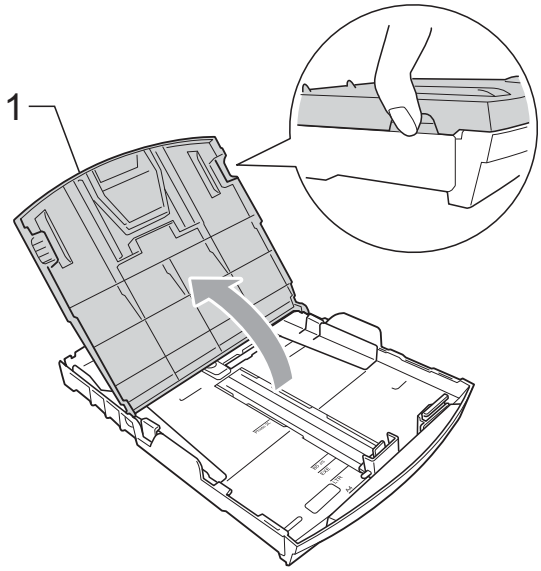

3. With both hands, gently press and slide the paper side guides (1) and then the paper length guide (2) to fit the paper size.
Make sure that the triangular marks (3) on the paper side guides (1) and paper length guide (2) line up with the marks for the paper size you are using.

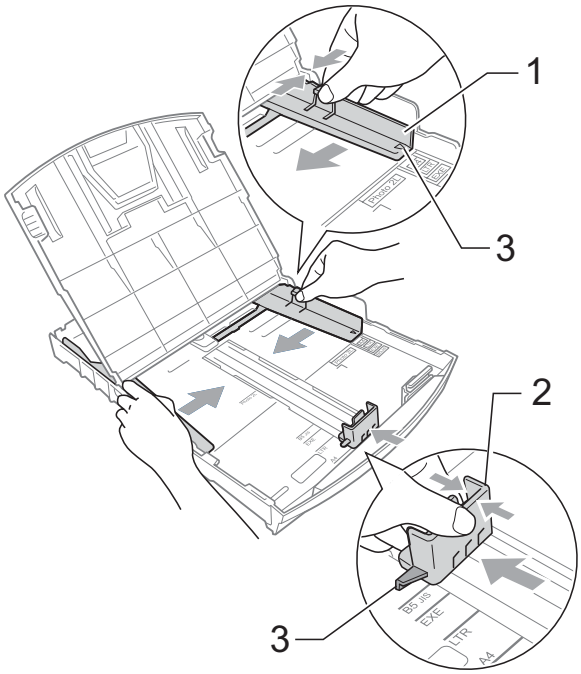

Note

When you use Legal size paper, press and hold the universal guide release button (1) as you slide out the front of the paper tray.

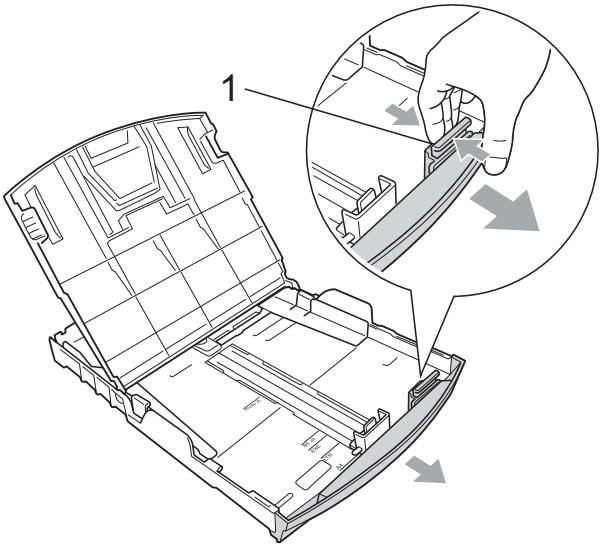

4 Fan the stack of paper well to avoid paper jams and misfeeds.

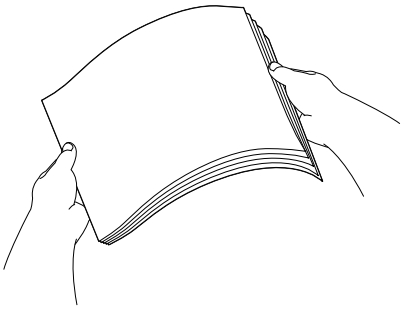

IMPORTANT

Always make sure that the paper is not curled.

5 Gently put the paper into the paper tray print side down and top edge in first. Check that the paper is flat in the tray.

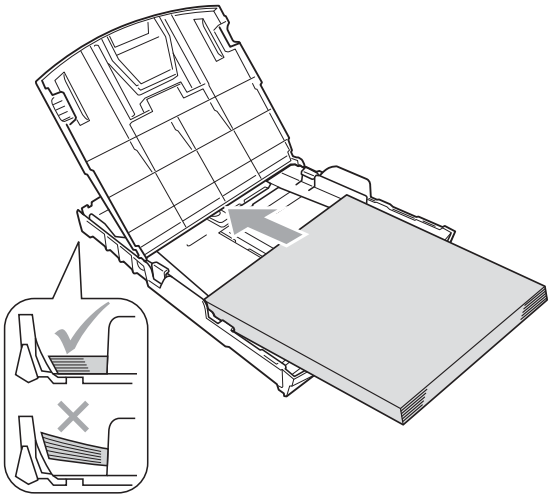

IMPORTANT

Be careful that you do not push the paper in too far; it may lift at the back of the tray and cause feed problems.

6 Gently adjust the paper side guides (1) to fit the paper with both hands.
Make sure the paper side guides touch the sides of the paper.

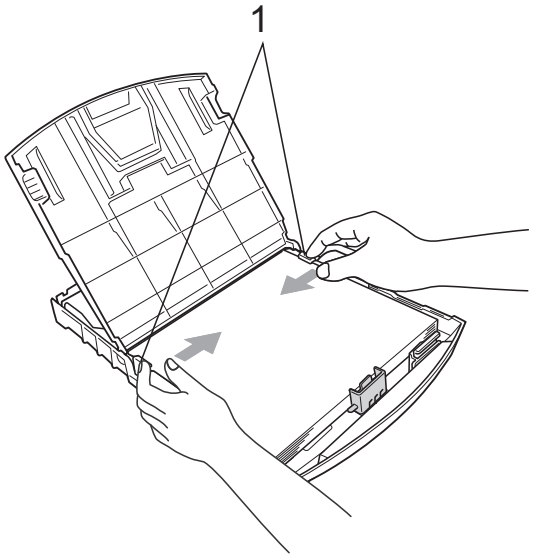

7 Close the output paper tray cover.

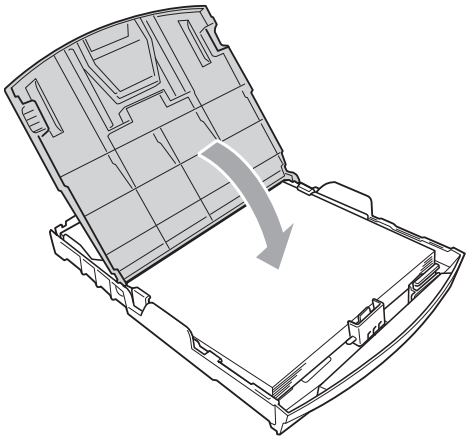

8 *Slowly* push the paper tray completely into the machine.

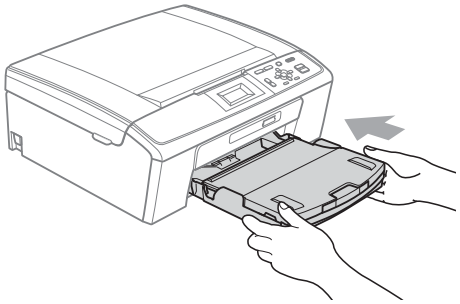

9 While holding the paper tray in place, pull out the paper support (①) until it clicks, and then unfold the paper support flap (②).

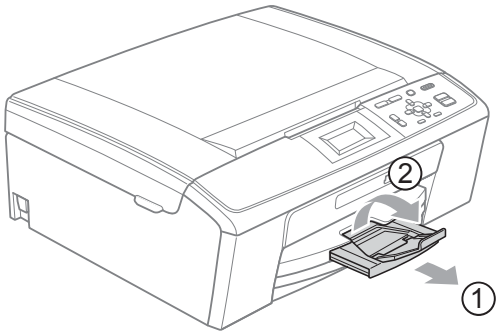

IMPORTANT

DO NOT use the paper support flap for Legal size paper.

Loading envelopes and postcards

About envelopes

- Use envelopes that weigh between 80 to 95 gsm.
- Some envelopes need margin settings to be set in the application. Make sure you do a test print first before printing many envelopes.

IMPORTANT

DO NOT use any of the following types of envelopes, as they will cause paper feed problems:

- That are of a baggy construction.
- That are embossed (have raised writing on them).
- That have clasps or staples.
- That are pre-printed on the inside.

Glue	Double flap
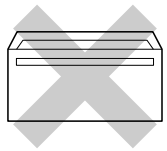	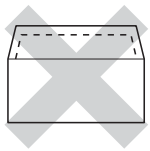

Occasionally you may experience paper feed problems caused by the thickness, size and flap shape of the envelopes you are using.

How to load envelopes and postcards

1. Before loading, press the corners and sides of envelopes or postcards to make them as flat as possible.

IMPORTANT

If envelopes or postcards are “double-feeding”, put one envelope or postcard in the paper tray at a time.

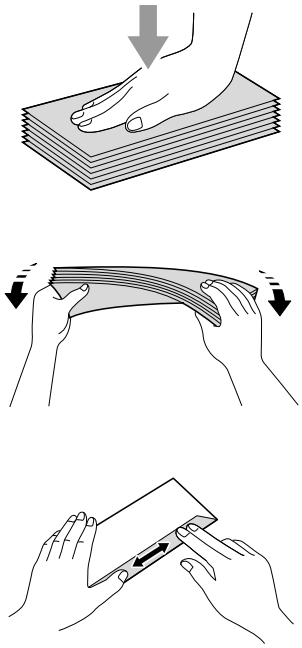

2. Put envelopes or postcards in the paper tray with the address side down and the leading edge (top of the envelopes) in first. With both hands, gently press and slide the paper side guides (1) and paper length guide (2) to fit the size of the envelopes or postcards.

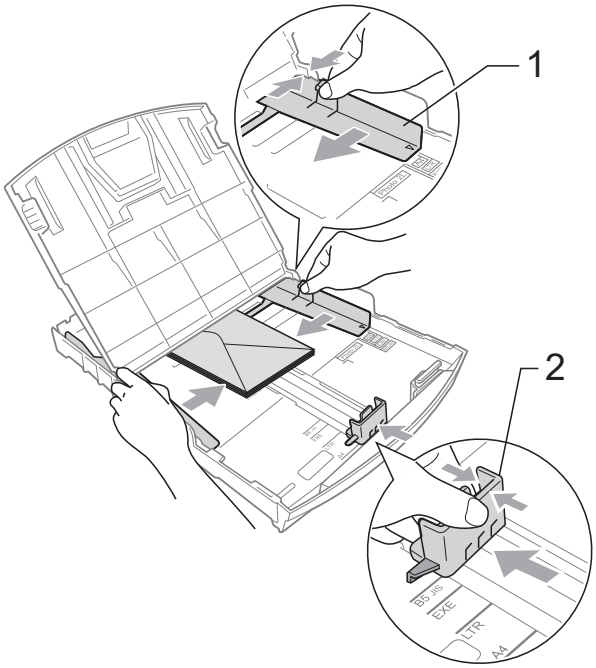

If you have problems printing on envelopes with the flap on the short edge, try the following suggestions:

1. Open the envelope flap.
2. Put the envelope into the paper tray with the address side down and the flap positioned as shown in the illustration.

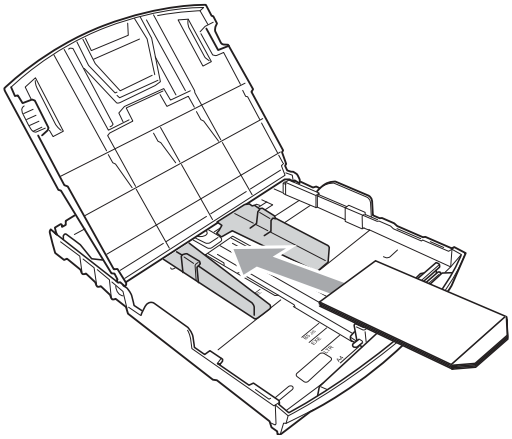

3. Adjust the size and margin in your application.

Removing small printouts from the machine

When the machine ejects small paper onto the output paper tray cover you may not be able to reach it. Make sure printing has finished, and then pull the tray completely out of the machine.

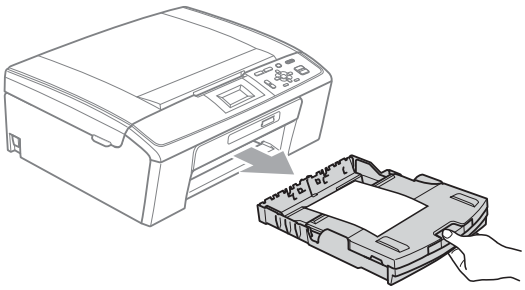

Printable area

The printable area depends on the settings in the application you are using. The figures below show the unprintable areas on cut sheet paper and envelopes. The machine can print in the shaded areas of cut sheet paper when the Borderless print feature is available and turned on. (See *Printing* for Windows® or *Printing and Faxing* for Macintosh in the *Software User's Guide*.)

Cut Sheet Paper

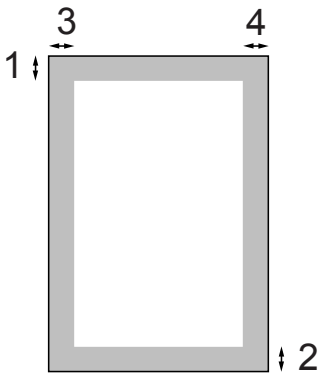

Envelopes

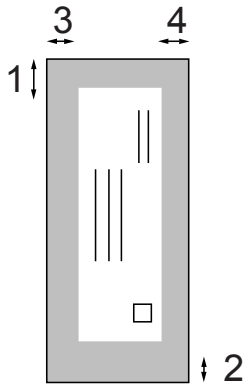

	Top (1)	Bottom (2)	Left (3)	Right (4)
Cut Sheet	3 mm	3 mm	3 mm	3 mm
Envelopes	12 mm	24 mm	3 mm	3 mm

Note

The Borderless feature is not available for envelopes.

Paper settings

Paper Type

To get the best print quality, set the machine for the type of paper you are using.

1. Press **Menu**.
2. Press ▲ or ▼ to choose `General Setup`.
   Press **OK**.
3. Press ▲ or ▼ to choose `Paper Type`.
   Press **OK**.
4. Press ▲ or ▼ to choose `Plain Paper`, `Inkjet Paper`, `Brother BP71`, `Brother BP61`, `Other Glossy` or `Transparency`.
   Press **OK**.
5. Press **Stop/Exit**.

Note

The machine ejects paper with printed surfaces face up onto the paper tray in front of the machine. When you use transparencies or glossy paper, remove each sheet at once to prevent smudging or paper jams.

Paper Size

You can use five sizes of paper for printing copies: A4, A5, Letter, Legal and 10 × 15 cm. When you load a different size of paper in the machine, you will need to change the paper size setting at the same time.

1. Press **Menu**.
2. Press ▲ or ▼ to choose `General Setup`.
   Press **OK**.
3. Press ▲ or ▼ to choose `Paper Size`.
   Press **OK**.
4. Press ▲ or ▼ to choose `A4`, `A5`, `10x15cm`, `Letter` or `Legal`.
   Press **OK**.
5. Press **Stop/Exit**.

Acceptable paper and other print media

The print quality can be affected by the type of paper you use in the machine.

To get the best print quality for the settings you have chosen, always set the Paper Type to match the type of paper you load.

You can use plain paper, inkjet paper (coated paper), glossy paper, transparencies and envelopes.

We recommend testing various paper types before buying large quantities.

For best results, use Brother paper.

- When you print on inkjet paper (coated paper), transparencies and glossy paper, be sure to choose the correct print media in the "**Basic**" tab of the printer driver or in the Paper Type setting of the menu. (See *Paper Type* on page 22.)
- When you print on Brother photo paper, load one extra sheet of the same photo paper in the paper tray. An extra sheet has been included in the paper package for this purpose.
- When you use transparencies or photo paper, remove each sheet at once to prevent smudging or paper jams.
- Avoid touching the printed surface of the paper immediately after printing, the surface may not be completely dry and may stain your fingers.

Recommended print media

To get the best print quality, we suggest using Brother paper. (See the table below.)

If Brother paper is not available in your country, we recommend testing various papers before purchasing large quantities.

We recommend using "3M Transparency Film" when you print on transparencies.

Brother paper

Paper Type	Item
A4 Plain	BP60PA
A4 Glossy Photo	BP71GA4
A4 Inkjet (Matte)	BP60MA
10 × 15 cm Glossy	BP71GP

Handling and using print media

- Store paper in its original packaging, and keep it sealed. Keep the paper flat and away from moisture, direct sunlight and heat.
- Avoid touching the shiny (coated) side of photo paper. Load photo paper with the shiny side facing down.
- Avoid touching either side of transparencies because they absorb water and perspiration easily, and this may cause decreased output quality. Transparencies designed for laser printers/copiers may stain your next document. Use only transparencies recommended for inkjet printing.

IMPORTANT

DO NOT use the following kinds of paper:

- Damaged, curled, wrinkled, or irregularly shaped paper

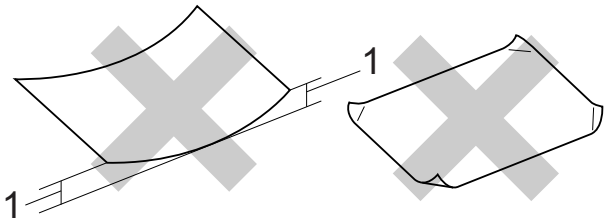

1 2 mm or greater curl may cause jams to occur.

- Extremely shiny or highly textured paper
- Paper that cannot be arranged uniformly when stacked
- Paper made with a short grain

Paper capacity of the output paper tray cover

Up to 50 sheets of 80 gsm A4 paper.

- Transparencies and photo paper must be picked up from the output paper tray cover one page at a time to avoid smudging.

Choosing the right print media

Paper type and size for each operation

Paper Type	Paper Size		Usage		
			Copy	Photo Capture	Printer
Cut Sheet	A4	210 × 297 mm (8.3 × 11.7 in.)	Yes	Yes	Yes
	Letter	215.9 × 279.4 mm (8 1/2 × 11 in.)	Yes	Yes	Yes
	Legal	215.9 × 355.6 mm (8 1/2 × 14 in.)	Yes	–	Yes
	Executive	184 × 267 mm (7 1/4 × 10 1/2 in.)	–	–	Yes
	JIS B5	182 × 257 mm (7.2 × 10.1 in.)	–	–	Yes
	A5	148 × 210 mm (5.8 × 8.3 in.)	Yes	–	Yes
	A6	105 × 148 mm (4.1 × 5.8 in.)	–	–	Yes
Cards	Photo	10 × 15 cm (4 × 6 in.)	Yes	Yes	Yes
	Photo 2L	13 × 18 cm (5 × 7 in.)	–	Yes	Yes
	Index Card	127 × 203 mm (5 × 8 in.)	–	–	Yes
	Postcard 1	100 × 148 mm (3.9 × 5.8 in.)	–	–	Yes
	Postcard 2 (Double)	148 × 200 mm (5.8 × 7.9 in.)	–	–	Yes
Envelopes	C5 Envelope	162 × 229 mm (6.4 × 9 in.)	–	–	Yes
	DL Envelope	110 × 220 mm (4.3 × 8.7 in.)	–	–	Yes
	COM-10	105 × 241 mm (4 1/8 × 9 1/2 in.)	–	–	Yes
	Monarch	98 × 191 mm (3 7/8 × 7 1/2 in.)	–	–	Yes
	JE4 Envelope	105 × 235 mm (4.1 × 9.3 in.)	–	–	Yes
Transparencies	A4	210 × 297 mm (8.3 × 11.7 in.)	Yes	–	Yes
	Letter	215.9 × 279.4 mm (8 1/2 × 11 in.)	Yes	–	Yes
	Legal	215.9 × 355.6 mm (8 1/2 × 14 in.)	Yes	–	Yes
	A5	148 × 210 mm (5.8 × 8.3 in.)	Yes	–	Yes

Paper weight, thickness and capacity

Paper Type		Weight	Thickness	No. of sheets
Cut Sheet	Plain Paper	64 to 120 gsm	0.08 to 0.15 mm	100 [1]
	Inkjet Paper	64 to 200 gsm	0.08 to 0.25 mm	20
	Other Glossy Paper	Up to 220 gsm	Up to 0.25 mm	20 [2]
Cards	Photo Card	Up to 220 gsm	Up to 0.25 mm	20 [2]
	Index Card	Up to 120 gsm	Up to 0.15 mm	30
	Postcard	Up to 200 gsm	Up to 0.25 mm	30
Envelopes		75 to 95 gsm	Up to 0.52 mm	10
Transparencies		–	–	10

[1] Up to 100 sheets of 80 gsm paper.

[2] BP71 260 gsm paper is especially designed for Brother inkjet machines.

3 Loading documents

How to load documents

Using the scanner glass

You can use the scanner glass to copy or scan pages of a book or one page at a time.

Document Sizes Supported

Length:	Up to 297 mm
Width:	Up to 215.9 mm
Weight:	Up to 2 kg

How to load documents

1. Lift the document cover.
2. Using the document guidelines on the left and top, place the document face down in the upper left corner of the scanner glass.

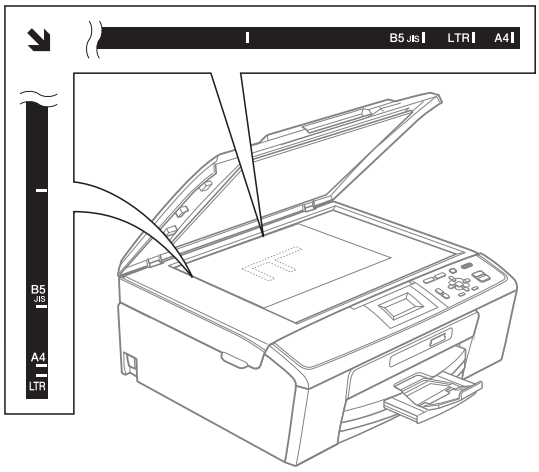

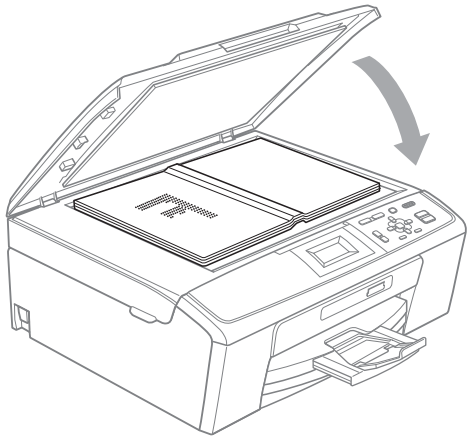

3. Close the document cover.

IMPORTANT

If you are scanning a book or thick document, DO NOT slam the cover down or press on it.

Scannable area

The scannable area depends on the settings in the application you are using. The figures below show unscannable areas.

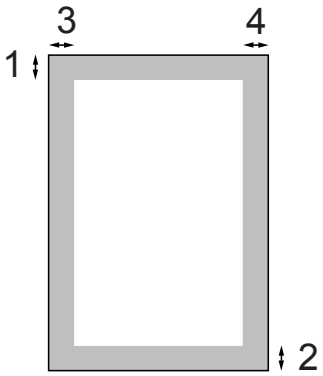

Usage	Document Size	Top (1) Bottom (2)	Left (3) Right (4)
Copy	A4	3 mm	3 mm
	Letter	3 mm	3 mm
Scan	A4	3 mm	3 mm
	Letter	3 mm	3 mm

4 Making copies

How to copy

The following steps show the basic copy operation. For details about each option, see the *Advanced User's Guide*.

1. Load your document *face down* on the scanner glass.
   (See *Using the scanner glass* on page 19.)

2. Press **+** or **-** repeatedly until the number of copies you want appears (up to 99).

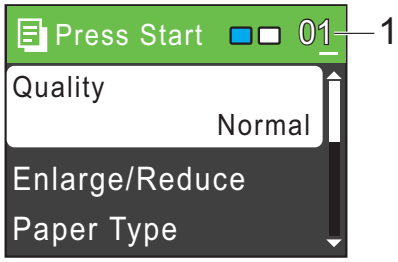

1 No. of Copies

3. Press **Mono Start** or **Colour Start**.

Stop copying

To stop copying, press **Stop/Exit**.

Copy settings

You can change the following copy settings. Press ▲ or ▼ to scroll through the copy settings. When the setting you want is highlighted, press **OK**.

(Basic User's Guide)

For details about changing the following copy settings, see page 22.

- Paper Type
- Paper Size

(Advanced User's Guide)

For details about changing the following copy settings, see chapter 3:

- Quality
- Enlarge/Reduce
- Density
- Page Layout
- Set New Default
- Factory Reset

Paper options

Paper Type

If you are copying on special paper, set the machine for the type of paper you are using to get the best print quality.

1. Load your document.
2. Enter the number of copies you want.
3. Press ▲ or ▼ to choose `Paper Type`.
   Press **OK**.
4. Press ▲ or ▼ to choose `Plain Paper`, `Inkjet Paper`, `Brother BP71`, `Brother BP61`, `Other Glossy` or `Transparency`.
   Press **OK**.
5. If you do not want to change additional settings, press **Mono Start** or **Colour Start**.

Paper Size

If you are copying on paper other than A4 size, you will need to change the paper size setting.

You can copy only on A4, Legal, Letter, A5 or Photo 10 × 15 cm paper.

1. Load your document.
2. Enter the number of copies you want.
3. Press ▲ or ▼ to choose `Paper Size`.
   Press **OK**.
4. Press ▲ or ▼ to choose `A4`, `A5`, `10x15cm`, `Letter` or `Legal`.
   Press **OK**.
5. If you do not want to change additional settings, press **Mono Start** or **Colour Start**.

5 Printing photos from a memory card

PhotoCapture Center™ operations

Even if your machine is *not* connected to your computer, you can print photos directly from digital camera media. (See *Print Images* on page 26.)

You can scan documents and save them directly to a memory card. (See *How to scan to a memory card* on page 27.)

If your machine is connected to a computer, you can access a memory card that is inserted in the front of the machine from your computer.

(See *PhotoCapture Center*™ for Windows® or *Remote Setup & PhotoCapture Center*™ for Macintosh in the *Software User's Guide*.)

Using a memory card

Your Brother machine has media drives (slots) for use with the following popular digital camera media: Memory Stick™, Memory Stick PRO™, Memory Stick Duo™, Memory Stick PRO Duo™, SD and SDHC.

The PhotoCapture Center™ feature lets you print digital photos from your digital camera at high resolution to get photo quality printing.

Getting started

Firmly put a memory card into the correct slot.

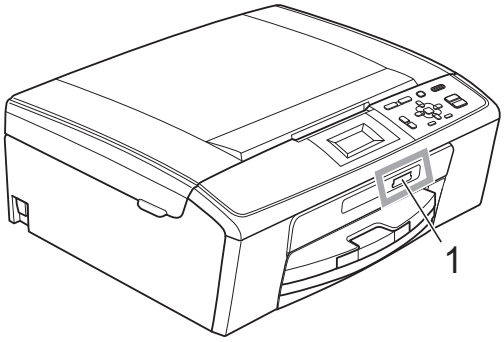

1 Memory card slot

Slot	Compatible memory cards	
Upper slot 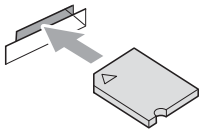		Memory Stick™ Memory Stick PRO™
		Memory Stick Duo™ Memory Stick PRO Duo™
		Memory Stick Micro™ (Adapter required)
Lower slot 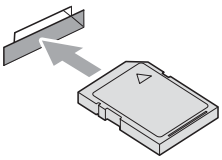		SD SDHC
	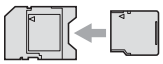	mini SD (Adapter required) micro SD (Adapter required)

IMPORTANT

DO NOT insert a Memory Stick Duo™ into the lower SD slot, this may cause damage to the machine.

PHOTO CAPTURE key indications:

- **PHOTO CAPTURE** light is on, the memory card is correctly inserted.
- **PHOTO CAPTURE** light is off, the memory card is not correctly inserted.
- **PHOTO CAPTURE** light is blinking, the memory card is being read or written to.

IMPORTANT

DO NOT unplug the power cord or remove the memory card from the media drive (slot) while the machine is reading or writing to the memory card (the **PHOTO CAPTURE** key is blinking). **You will lose your data or damage the card.**

The machine can only read one device at a time.

Print Images

View Photos

You can preview your photos on the LCD before you print them. If your photos are large files there may be a delay before each photo is displayed on the LCD.

1. Make sure you have put the memory card in the correct slot.
   Press (**PHOTO CAPTURE**).
2. Press ▲ or ▼ to choose `View Photo(s)`.
   Press **OK**.
3. Press ◀ or ▶ to choose your photo.
4. Press **+** or **-** repeatedly to enter the number of copies you want.
5. Repeat steps ❸ and ❹ until you have chosen all the photos.

Note

Press **Clear** to go back to the previous level.

6. After you have chosen all the photos, do one of the following:
   - Press **OK** and change the print settings. (See *PhotoCapture Center™ print settings* on page 26.)
   - If you do not want to change any settings, press **Colour Start** to print.

PhotoCapture Center™ print settings

You can change the print settings temporarily for the next print.

The machine returns to its default settings after 3 minutes.

Note

You can save the print settings you use most often by setting them as the default. (See *Setting your changes as a new default* in *chapter 4* in the *Advanced User's Guide*.)

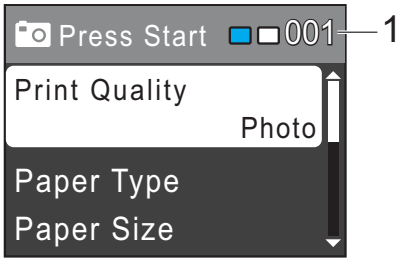

1 No. of prints

(For View Photo(s)
You can see the total number of photos that will be printed.

(For Print All Photos, Print Photos)
You can see the number of copies of each photo that will be printed.

(For DPOF printing)
This does not appear.

How to scan to a memory card

You can scan monochrome and colour documents into a memory card. Monochrome documents will be stored in PDF (*.PDF) or TIFF (*.TIF) file formats. Colour documents may be stored in PDF (*.PDF) or JPEG (*.JPG) file formats. The factory setting is `Color 150 dpi` and the default file format is `PDF`. The machine automatically creates file names based on the current date. (For details, see the *Quick Setup Guide*.) For example, the fifth image scanned on July 1, 2010 would be named 01071005.PDF. You can change the colour and quality.

Quality	Selectable File Format
`Color 150 dpi`	`JPEG` / `PDF`
`Color 300 dpi`	`JPEG` / `PDF`
`Color 600 dpi`	`JPEG` / `PDF`
`B/W 200x100 dpi`	`TIFF` / `PDF`
`B/W 200 dpi`	`TIFF` / `PDF`

1. Make sure you have put the memory card in the correct slot.

IMPORTANT

DO NOT take out the memory card while **PHOTO CAPTURE** is blinking to avoid damaging the card or data stored on it.

2. Load your document.

3. When you want to scan to a memory card, press (**SCAN**).

4. Press ▲ or ▼ to choose `Scan to Media`.

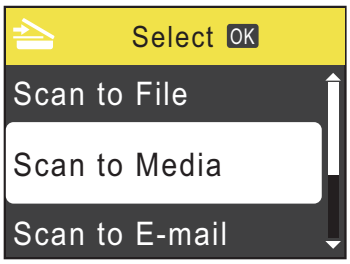

Press **OK**.

5. Do one of the following:
   - To change the quality, press ▲ or ▼ to choose `Quality`. Press **OK**. Go to step ❻.
   - Press **Mono Start** or **Colour Start** to start scanning without changing additional settings.

6. Press ▲ or ▼ to choose `Color 150 dpi`, `Color 300 dpi`, `Color 600 dpi`, `B/W 200x100 dpi` or `B/W 200 dpi`.
   Press **OK**.

7. Do one of the following:
   - To change the file type, go to step ❽.
   - Press **Mono Start** or **Colour Start** to start scanning without changing additional settings.

8. Press ▲ or ▼ to choose `File Type`.
   Press **OK**.
   Press ▲ or ▼ to choose `JPEG`, `PDF` or `TIFF`.
   Press **OK**.

Note

- If you chose a `Color` resolution in step ❻, you cannot choose `TIFF`.
- If you chose a `B/W` resolution in step ❻, you cannot choose `JPEG`.

9 Do one of the following:

- To change the file name, go to step ❿.
- Press **Mono Start** or **Colour Start** to start scanning without changing additional settings.

10 The file name is set automatically; however, you can set a name of your choice using the ▲, ▼, ◀ or ▶ keys.
Press ▲ or ▼ to choose `File Name`.
Press **OK**.
Enter the new name. (See *Entering Text* on page 59.)
You can only change the first 6 characters.

Press ▲, ▼, ◀ or ▶ to select OK, and press **OK**.

11 Press **Mono Start** or **Colour Start**.

6 How to print from a computer

Printing a document

The machine can receive data from your computer and print it. To print from a computer, install the printer driver.

(See *Printing* for Windows® or *Printing and Faxing* for Macintosh in the *Software User's Guide* for the details about the print settings.)

1. Install the Brother printer driver on the Installation CD-ROM. (See the *Quick Setup Guide*.)
2. From your application, choose the Print command.
3. Choose the name of your machine in the **Print** dialog box and click **Properties**.
4. Choose the settings you want in the Properties dialog box.
   - **Media Type/Quality**
   - **Paper Size**
   - **Page Layout**
   - **Colour Settings**
   - **Scaling**
   - **Use Watermark**
   - **Print Date & Time**
5. Click **OK**.
6. Click **OK** to begin printing.

7 How to scan to a computer

Scanning a document

There are several ways to scan documents. You can use the **SCAN** key on the machine or the scanner drivers on your computer.

1. To use the machine as a scanner, install a scanner driver.
   If the machine is on a Network, configure it with a TCP/IP address. (DCP-J315W only)
   - Install the scanner drivers on the Installation CD-ROM. (See the *Quick Setup Guide* and *Scanning* in the *Software User's Guide*.)
   - (DCP-J315W only)
     Configure the machine with a TCP/IP address if network scanning does not work. (See *Configuring Network Scanning* in the *Software User's Guide*.)
2. Load your document. (See *Loading documents* on page 19.)
   - Use the scanner glass to scan a page of a book or one sheet at a time.
3. Do one of the following:
   - To scan using the **SCAN** key, see *Scanning using the scan key* on page 30.
   - To scan using a scanner driver at your computer, see *Scanning using a scanner driver* on page 30.

Scanning using the scan key

For more information, see *Using the Scan key* in the *Software User's Guide*.

1. Press the **SCAN** key.
2. Choose the scan mode you want.
   - `Scan to File`
   - `Scan to Media`
   - `Scan to E-mail`
   - `Scan to OCR` [1]
   - `Scan to Image`

   [1] This function is not available.
3. (DCP-J315W only)
   Choose the computer you want to send the data to.
4. Press **Start** to begin scanning.

Scanning using a scanner driver

For more information, see *Scanning a document using the TWAIN driver* or *Scanning a document using the WIA driver* in the *Software User's Guide*.

1. Start a scanning application and click the **Scan** button.
2. Adjust the settings such as **Resolution**, **Brightness** and **Scan Type** in the **Scanner Setup** dialog box.
3. Click **Start** or **Scan** to begin scanning.

A Routine maintenance

Replacing the ink cartridges

Your machine is equipped with an ink dot counter. The ink dot counter automatically monitors the level of ink in each of the 4 cartridges. When the machine detects an ink cartridge is running out of ink, the machine will tell you with a message on the LCD.

Note

For example, when one of the ink cartridge is nearly empty, the LCD will display `Ink low` (name of colour).

You should purchase a replacement cartridge in preparation for when the machine indicates the colour is completely empty.

When one of the ink cartridge is empty, the LCD will display `Cannot Print` or `B&W Print Only`.

You should only replace the actual ink cartridge when this message `Cannot Print` or `B&W Print Only` appears on the LCD.

The LCD will tell you which ink cartridge is low or needs replacing. Be sure to follow the LCD prompts to replace the ink cartridges in the correct order.

Even though the machine tells you to replace an ink cartridge, there will be a small amount of ink left in the ink cartridge. It is necessary to keep some ink in the ink cartridge to prevent air from drying out and damaging the print head assembly.

IMPORTANT

Brother multifunction machines are designed to work with ink of a particular specification and will work to a level of optimum performance and reliability when used with genuine Brother Original ink cartridges. Brother cannot guarantee this optimum performance and reliability if ink or ink cartridges of other specifications are used. Brother does not therefore recommend the use of cartridges other than genuine Brother Original cartridges or the refilling of used cartridges with ink from other sources. If damage is caused to the print head or other parts of this machine as a result of using incompatible products with this machine, any repairs required as a result may not be covered by the warranty.

1. Open the ink cartridge cover.
   If one or more ink cartridges have reached the end of their life, the LCD shows `Cannot Print` or `B&W Print Only`.

2 Press the lock release lever as shown to release the cartridge indicated on the LCD. Remove the cartridge from the machine.

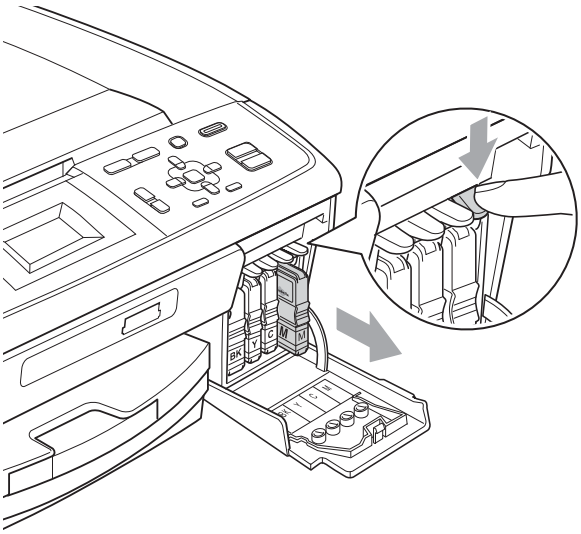

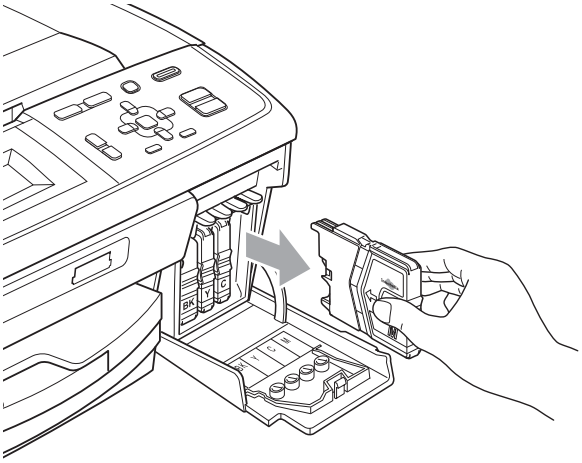

3 Open the new ink cartridge bag for the colour shown on the LCD, and then take out the ink cartridge.

4 Turn the green knob on the protective yellow cap clockwise until it clicks to release the vacuum seal, then remove the cap (1).

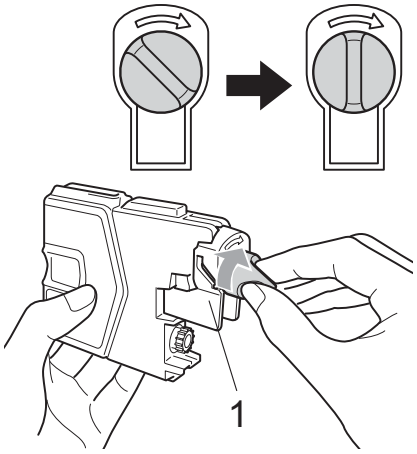

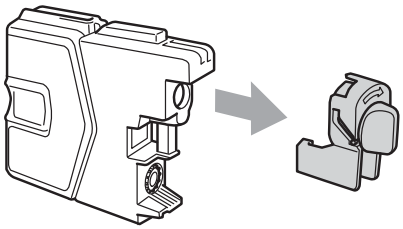

5 Each colour has its own correct position. Insert the ink cartridge in the direction of the arrow on the label.

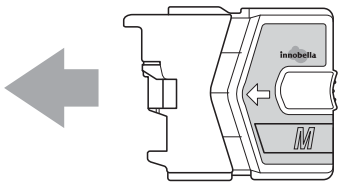

6 Gently push the ink cartridge in until it clicks, and then close the ink cartridge cover.

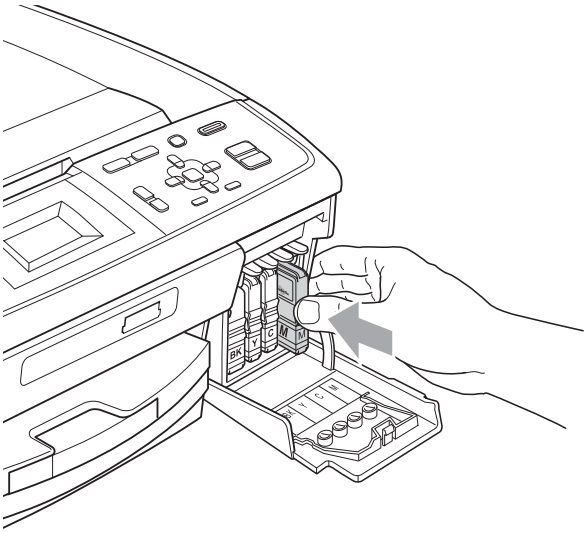

7 The machine will automatically reset the ink dot counter.

Note

- If you replaced an ink cartridge, for example Black, the LCD may ask you to verify that it was a brand new one (for example, `Did You Change` BK `Black`). For each new cartridge you installed, press **+** (`Yes`) to automatically reset the ink dot counter for that colour. If the ink cartridge you installed is not a brand new one, be sure to press **-** (`No`).
- If the LCD shows `No Ink Cartridge` or `Cannot Detect` after you install the ink cartridges, check that the ink cartridges are installed correctly.

CAUTION

If ink gets in your eyes, wash it out with water at once and call a doctor if you are concerned.

IMPORTANT

- DO NOT take out ink cartridges if you do not need to replace them. If you do so, it may reduce the ink quantity and the machine will not know the quantity of ink left in the cartridge.
- DO NOT touch the cartridge insertion slots. If you do so, the ink may stain your skin.
- If ink gets on your skin or clothing immediately wash it off with soap or detergent.
- If you mix the colours by installing an ink cartridge in the wrong position, clean the print head several times after correcting the cartridge installation.
- Once you open an ink cartridge, install it in the machine and use it up within six months of installation. Use unopened ink cartridges by the expiration date written on the cartridge package.
- DO NOT dismantle or tamper with the ink cartridge, this can cause the ink to leak out of the cartridge.

Cleaning and checking the machine

Cleaning the scanner glass

1. Lift the document cover (1). Clean the scanner glass (2) and the white plastic (3) with a soft lint-free cloth moistened with a non-flammable glass cleaner.

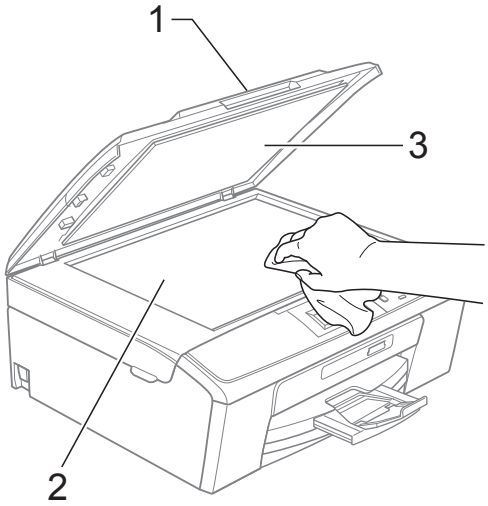

Note

In addition to cleaning the scanner glass with a non-flammable glass cleaner, run your finger tip over the glass to see if you can feel anything on it. If you feel dirt or debris, clean the glass again concentrating on that area. You may need to repeat the cleaning process three or four times. To test, make a copy after each cleaning attempt.

Cleaning the paper pick-up rollers

1. Pull the paper tray completely out of the machine.
2. Unplug the machine from the electrical socket and open the Jam Clear Cover (1) at the back of the machine.

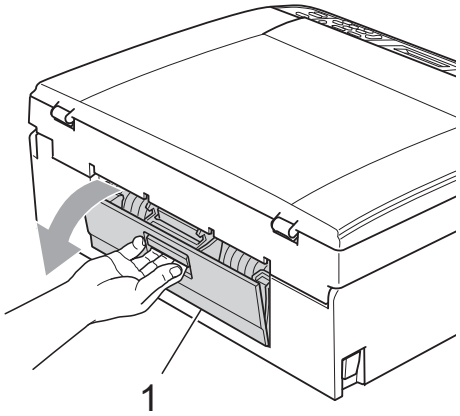

3. Clean the Paper Pick-up Rollers (1) with isopropyl alcohol on a cotton swab.

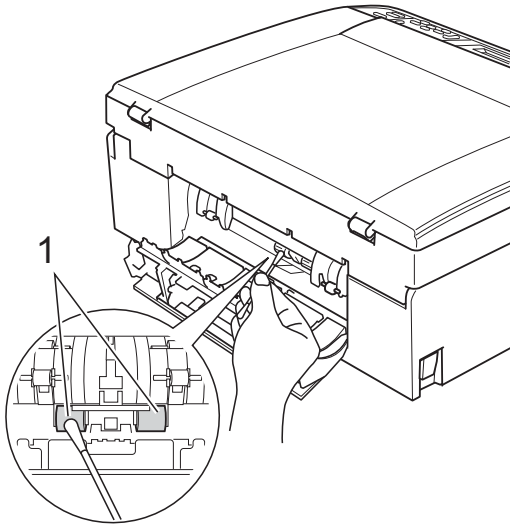

4. Close the Jam Clear Cover.
   Make sure the cover is closed correctly.
5. Re-connect the power cord.
6. Slowly push the paper tray completely back into the machine.

Cleaning the print head

To maintain good print quality, the machine will automatically clean the print head when needed. You can start the cleaning process manually if there is a print quality problem.

Clean the print head and ink cartridges if you get a horizontal line in the text or graphics, or blank text on your printed pages. You can clean Black only, three colours at a time (Cyan/Magenta/Yellow), or all four colours at once.

Cleaning the print head consumes ink. Cleaning too often uses ink unnecessarily.

IMPORTANT

DO NOT touch the print head. Touching the print head may cause permanent damage and may void the print head's warranty.

1. Press **Menu**.
2. Press ▲ or ▼ to choose `Ink Management`.
   Press **OK**.
3. Press ▲ or ▼ to choose `Cleaning`.
   Press **OK**.
4. Press ▲ or ▼ to choose `Black`, `Color` or `All`.
   Press **OK**.
   The machine cleans the print head.
   When cleaning is finished, the machine will go back to standby mode automatically.

Note

If you clean the print head at least five times and the print has not improved, try installing a new Brother Original Innobella™ ink cartridge for each problem colour. Try cleaning the print head again up to five more times. If the print has not improved call your Brother dealer.

Checking the print quality

If faded or streaked colours and text appear on your output, some of the nozzles may be clogged. You can check this by printing the Print Quality Check Sheet and looking at the nozzle check pattern.

1. Press **Menu**.
2. Press ▲ or ▼ to choose `Ink Management`.
   Press **OK**.
3. Press ▲ or ▼ to choose `Test Print`.
   Press **OK**.
4. Press ▲ or ▼ to choose `Print Quality`.
   Press **OK**.
5. Press **Colour Start**.
   The machine begins printing the Print Quality Check Sheet.
6. Check the quality of the four colour blocks on the sheet.
7. Do one of the following:
   - If all lines are clear and visible, press **+** to choose `Yes`, and go to step ⓫.
   - If you can see missing short lines as shown below, press **-** to choose `No`.

OK

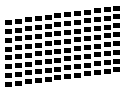

Poor

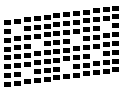

8. The LCD asks you if the print quality is OK for black and the three colours.
   Press **+** (`Yes`) or **-** (`No`).
9. The LCD asks you if you want to start cleaning.
   Press **+** (`Yes`).
   The machine starts cleaning the print head.

A

10 After cleaning is finished, press **Colour Start**.
The machine starts printing the Print Quality Check Sheet again. Return to step ❻.

11 Press **Stop/Exit**.
If you repeat this procedure at least five times and the print quality is still poor, replace the ink cartridge for the clogged colour.
After replacing the ink cartridge, check the print quality. If the problem still exists, repeat the cleaning and test print procedures at least five times for the new ink cartridge. If ink is still missing, call your Brother dealer.

IMPORTANT

DO NOT touch the print head. Touching the print head may cause permanent damage and may void the print head's warranty.

Note

When a print head nozzle is clogged the printed sample looks like this.

→

After the print head nozzle is cleaned, the horizontal lines are gone.

Checking the print alignment

You may need to adjust the print alignment after transporting the machine, if your printed text becomes blurred or images become faded.

1 Press **Menu**.

2 Press ▲ or ▼ to choose `Ink Management`.
Press **OK**.

3 Press ▲ or ▼ to choose `Test Print`.
Press **OK**.

4 Press ▲ or ▼ to choose `Alignment`.
Press **OK**.

5 Press **Mono Start** or **Colour Start**.
The machine starts printing the Alignment Check Sheet.

6 Check the 600 dpi and 1200 dpi test prints to see if number 5 most closely matches number 0.

- If the number 5 samples of both the 600 dpi and 1200 dpi test prints are the best matches, press **+** (`Yes`) to finish Alignment Check, and go to step ❾.
- If another test print number is a better match for either 600 dpi or 1200 dpi, press **-** (`No`) to choose it.

7 For 600 dpi, press ◀ or ▶ to choose the number of the test print that most closely matches the number 0 sample (1-8).
Press **OK**.

8 For 1200 dpi, press ◀ or ▶ to choose the number of the test print that most closely matches the number 0 sample (1-8).
Press **OK**.

9 Press **Stop/Exit**.

B Troubleshooting

Error and Maintenance messages

As with any sophisticated office product, errors may occur and consumable items may need to be replaced. If this happens, your machine identifies the error and shows an error message. The most common error and maintenance messages are shown below.

You can correct most errors and routine maintenance by yourself. If you need more help, the Brother Solutions Center offers the latest FAQs and troubleshooting tips.

Visit us at http://solutions.brother.com/

Error Message	Cause	Action
`B&W Print Only` `Replace Ink`	One or more of the colour ink cartridges have reached the end of their life. You can use the machine in black & white mode for approximately four weeks depending on the number of pages you print. While this message appears on the LCD, each operation works in the following way: ■ Printing If you click **Greyscale** in the **Advanced** tab of the printer driver you can use the machine as a monochrome printer. ■ Copying If the paper type is set to `Plain Paper` or `Inkjet Paper` you can make copies in monochrome. If the paper type is set to `Other Glossy`, `Brother BP71` or `Brother BP61` the machine will stop all print operations. *If you unplug the machine, or take out the ink cartridge, you cannot use the machine until you change to a new ink cartridge.*	Replace the ink cartridges. (See *Replacing the ink cartridges* on page 31.)

B

Error Message	Cause	Action
Cannot Detect	You installed a new ink cartridge too quickly and the machine did not detect it.	Take out the new ink cartridge and re-install it slowly.
	If you are using non Brother Original ink the machine may not detect the ink cartridge.	Replace the cartridge with a Brother Original ink cartridge. If the error message remains, contact your Brother dealer.
	An ink cartridge is not installed correctly.	Take out the ink cartridge and re-install it slowly until it clicks. (See *Replacing the ink cartridges* on page 31.)
Cannot Print Replace Ink	One or more of the ink cartridges have reached the end of their life. The machine will stop all print operations.	Replace the ink cartridges. (See *Replacing the ink cartridges* on page 31.)
Cover is Open	The scanner cover is not completely closed.	Lift the scanner cover and then close it again.
	The ink cartridge cover is not completely closed.	Firmly close the ink cartridge cover until it clicks.
Data Remaining	Print data is left in the machine's memory.	Press **Stop/Exit**. The machine will cancel the job and clear it from the memory. Try to print again.
High Temperature	The print head is too warm.	Allow the machine to cool down.
Ink Absorber Full	Internal servicing required. This problem may be caused by the use of cartridges other than genuine Brother Original cartridges or the refilling of empty cartridges with ink from other sources. If damage is caused to the print head or other parts of this machine as a result of using other brands of ink or ink cartridges, any repairs required as a result may not be covered by the warranty.	Call Brother Customer Service / your Brother dealer.
Ink Absorber NearFull	The ink absorber box or flushing box is near full.	Call Brother Customer Service / your Brother dealer.
Ink low	One or more of the ink cartridges are near the end of their life.	Order a new ink cartridge.
Low Temperature	The print head is too cold.	Allow the machine to warm up.
Media Error	The memory card is either corrupted, incorrectly formatted, or there is a problem with the memory card.	Put the card firmly into the slot again to make sure it is in the correct position. If the error remains, check the media drive (slot) of the machine by putting in another memory card that you know is working.
Media is Full.	The memory card you are using already contains 999 files.	Your machine can only save to your memory card if it contains less than 999 files. Try deleting unused files to free some space and try again.

Error Message	Cause	Action
No File	The memory card in the media drive does not contain a .JPG file.	Put the correct memory card into the slot again.
No Ink Cartridge	An ink cartridge is not installed correctly.	Take out the ink cartridge and put it in again seating it properly. (See *Replacing the ink cartridges* on page 31.)
No Paper Fed	The machine is out of paper or paper is not correctly loaded in the paper tray.	Do one of the following: ■ Refill the paper in the paper tray, and then press **Mono Start** or **Colour Start**. ■ Remove the paper and load it again and then press **Mono Start** or **Colour Start**. (See *Loading paper and other print media* on page 8.)
	The paper is jammed in the machine.	Remove the jammed paper by following the steps in *Printer jam or paper jam* on page 40.
	The Jam Clear Cover is not closed correctly.	Check the Jam Clear Cover is closed evenly at both ends. (See *Printer jam or paper jam* on page 40.)
Out of Memory	The machine's memory is full.	Copy operation in progress: Press **Stop/Exit** and wait until the other operations in progress finish and then try again.
	The memory card you are using does not have enough free space to scan the documents.	Delete unused files from your memory card to make some free space and then try again.
Paper Jam	Paper is jammed in the machine.	Remove the jammed paper by following the steps in *Printer jam or paper jam* on page 40.
		Make sure the paper length guide is adjusted to the correct paper size.
Unable to Clean XX Unable to Init. XX Unable to Print XX Unable to Scan XX	The machine has a mechanical problem. –OR– A foreign object such as a paper clip or ripped paper is in the machine.	Open the scanner cover and remove any foreign objects and paper scraps inside the machine. If the error message continues, disconnect the machine from the power for several minutes, then reconnect it.
Wrong Paper Size	Paper is not the correct size.	Check that the Paper Size setting matches the size of paper in the tray. Load the correct size of paper, and then press **Mono Start** or **Colour Start**. (See *Paper Size* on page 14.)

Error animation

Error animations display step-by-step instructions when paper gets jammed. You can read the steps at your own pace by pressing ▶ to see the next step and ◀ to go backward.

Printer jam or paper jam

Take out the jammed paper depending on where it is jammed in the machine.

1. Unplug the machine from the electrical socket.

2. Open the Jam Clear Cover (1) at the back of the machine. Pull the jammed paper out of the machine.

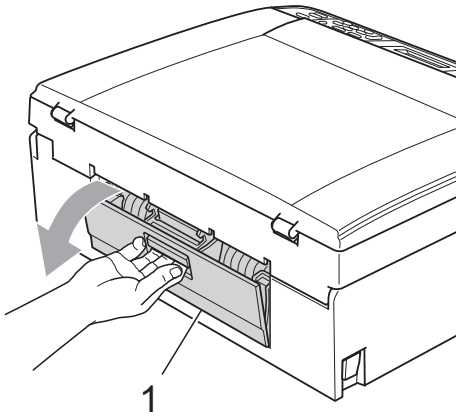

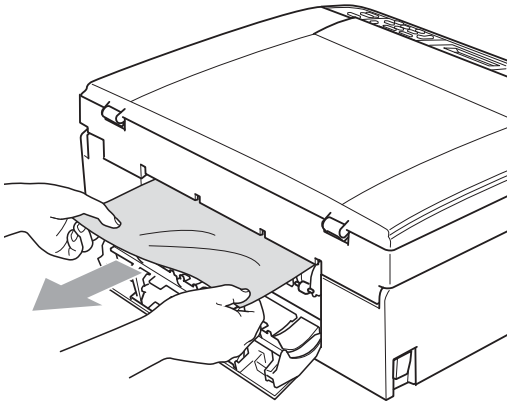

3. Close the Jam Clear Cover.
   Make sure the cover is closed correctly.

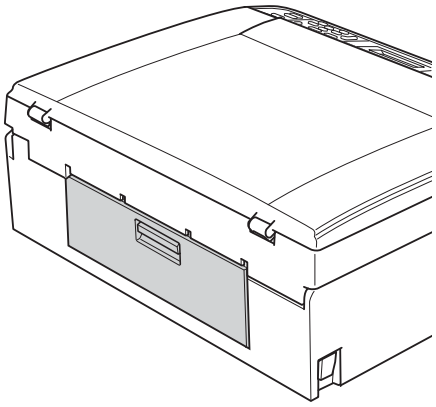

4. If the paper support flap is open, close it, and then close the paper support. Pull the paper tray completely out of the machine.

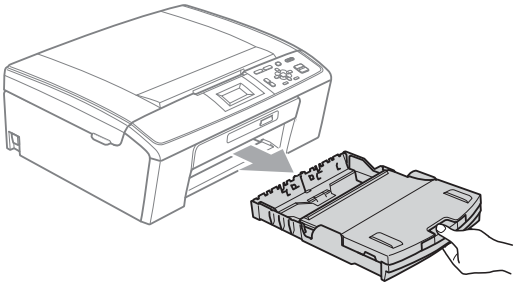

5. Pull out the jammed paper (1).

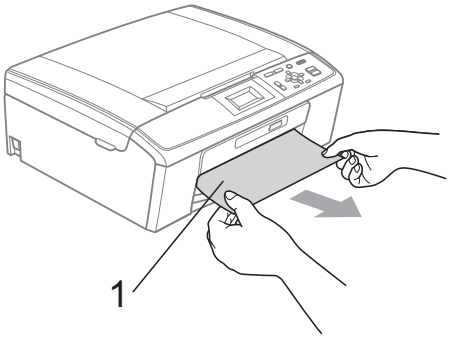

6 Using both hands, grasp the plastic tabs on both sides of the machine and lift the scanner cover (1) until it locks securely in the open position.

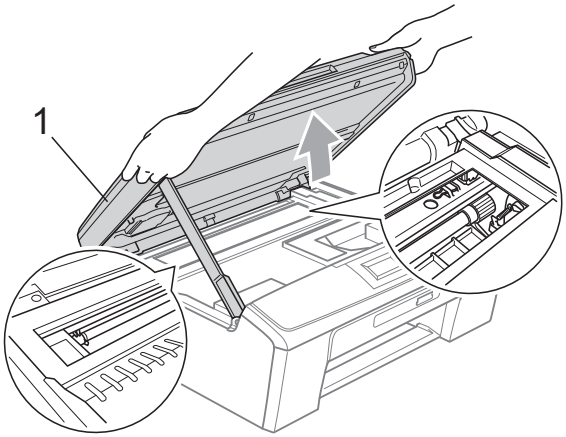

Move the print head (if necessary) to take out any paper remaining in this area. Make sure that jammed paper is not left in the corners of the machine. Check *both* ends of the print carriage.

Note

If the print head is at the right corner as shown in the illustration, you cannot move it. Re-connect the power cord, then hold down **Stop/Exit** until the print head moves to the middle. Unplug the machine from the power source, and take out the paper.

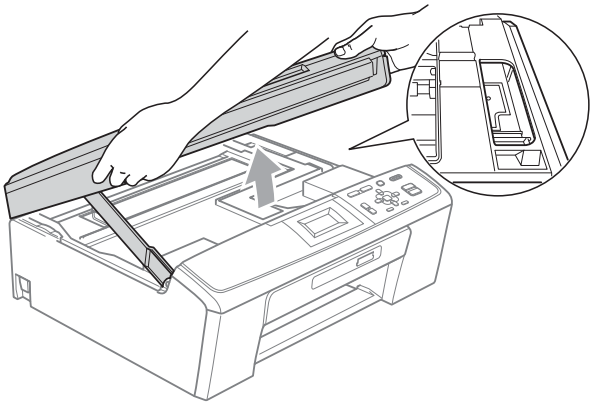

IMPORTANT

If ink gets on your skin or clothing immediately wash it off with soap or detergent.

7 Lift the scanner cover to release the lock (①). Gently push the scanner cover support down (②) and close the scanner cover (③) using both hands.

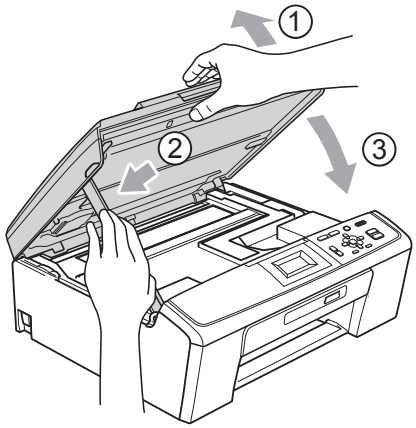

8 Push the paper tray firmly back into the machine.

9 While holding the paper tray in place, pull out the paper support (①) until it clicks, and then unfold the paper support flap (②).

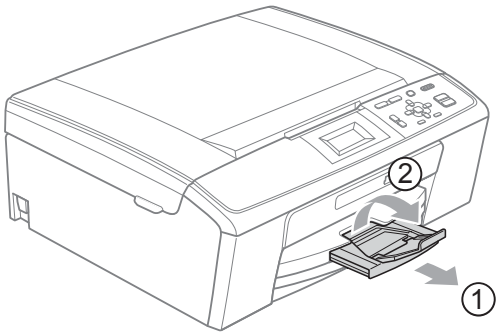

Make sure you pull out the paper support until it clicks.

IMPORTANT

DO NOT use the paper support flap for Legal size paper.

10 Re-connect the power cord.

B

Troubleshooting

If you think there is a problem with your machine, check the chart below and follow the troubleshooting tips.

Most problems can be easily resolved by yourself. If you need additional help, the Brother Solutions Center offers the latest FAQs and troubleshooting tips. Visit us at http://solutions.brother.com/

If you are having difficulty with your machine

Printing

Difficulty	Suggestions
No printout	Check the interface cable on both the machine and your computer. (See the *Quick Setup Guide*.)
	Make sure the machine is plugged in and not turned off.
	Check to see if the LCD is showing an error message. (See *Error and Maintenance messages* on page 37.)
	One or more ink cartridges have reached the end of their life. (See *Replacing the ink cartridges* on page 31.)
	If the LCD says `Cannot Print` and `Replace Ink`, see *Replacing the ink cartridges* on page 31.
	Check that the correct printer driver has been installed and chosen.
	Make sure that the machine is online. Click **Start** and then **Printers and Faxes**. Choose **Brother DCP-XXXX** (where XXXX is your model name), and make sure that **Use Printer Offline** is unchecked.
	When you choose the **Print Odd Pages** and **Print Even Pages** settings, you may see a print error message on your computer, as the machine pauses during the printing process. The error message will disappear after the machine re-starts printing.
Poor print quality	Brother does not recommend the use of cartridges other than genuine Brother Original cartridges or the refilling of used cartridges with ink from other sources.
	Check the print quality. (See *Checking the print quality* on page 35.)
	Make sure that the **Media Type** setting in the printer driver or the `Paper Type` setting in the machine's menu matches the type of paper you are using. (See *Printing* for Windows® or *Printing and Faxing* for Macintosh in the *Software User's Guide* and *Paper Type* on page 14.)
	Make sure that your ink cartridges are fresh. The following may cause ink to clog: ■ The expiration date written on the cartridge package has passed. (Brother Original cartridges stay usable for up to two years if kept in their original packaging.) ■ The ink cartridge was in your machine over for six months. ■ The ink cartridge may not have been stored correctly before use.
	Try using the recommended types of paper. (See *Acceptable paper and other print media* on page 15.)
	The recommended environment for your machine is between 20 °C to 33 °C.

Printing (continued)

Difficulty	Suggestions
White horizontal lines appear in text or graphics.	Clean the print head. (See *Cleaning the print head* on page 35.)
	Make sure you are using Brother Original Innobella™ ink.
	Try using the correct types of paper. (See *Acceptable paper and other print media* on page 15.)
The machine prints blank pages.	Clean the print head. (See *Cleaning the print head* on page 35.)
Characters and lines are stacked.	Check the printing alignment. (See *Checking the print alignment* on page 36.)
Printed text or images are skewed.	Make sure the paper is loaded correctly in the paper tray and the paper side guides are adjusted correctly. (See *Loading paper and other print media* on page 8.)
	Make sure the Jam Clear Cover is closed correctly.
Smudged stain at the top centre of the printed page.	Make sure the paper is not too thick or curled. (See *Acceptable paper and other print media* on page 15.)
Smudged stain at the right or left corner of the printed page.	Make sure the paper is not curled when you print on the back side of the paper with the **Print Odd Pages** and **Print Even Pages** settings.
Printing appears dirty or ink seems to run.	Make sure you are using the recommended types of paper. (See *Acceptable paper and other print media* on page 15.) Don't handle the paper until the ink is dry.
	If you are using photo paper, make sure that you have set the correct paper type. If you are printing a photo from your PC, set the **Media Type** in the **Basic** tab of the printer driver.
	Make sure you are using Brother Original Innobella™ ink.
Stains appear on the reverse side or at the bottom of the page.	Make sure the printer platen is not dirty with ink. (See *Cleaning the machine's printer platen* in *appendix A* in the *Advanced User's Guide*.)
	Make sure you are using the paper support flap. (See *Loading paper and other print media* on page 8.)
The machine prints dense lines on the page.	Check **Reverse Order** in the **Basic** tab of the printer driver.
The printouts are wrinkled.	In the printer driver **Advanced** tab, click **Colour Settings**, and uncheck **Bi-Directional Printing**.
	Make sure you are using Brother Original Innobella™ ink.
Cannot perform "Page Layout" printing.	Check that the paper size setting in the application and in the printer driver are the same.
Print speed is too slow.	Try changing the printer driver setting. The highest resolution needs longer data processing, sending and printing time. Try the other quality settings in the printer driver **Advanced** tab. Also, click the **Colour Settings**, and make sure you uncheck **Colour Enhancement**.
	Turn the borderless feature off. Borderless printing is slower than normal printing. (See *Printing* for Windows® or *Printing and Faxing* for Macintosh in the *Software User's Guide*.)
Colour Enhancement is not working correctly.	If the image data is not full colour in your application (such as 256 colour), Colour Enhancement will not work. Use at least 24 bit colour data with the Colour Enhancement feature.
Photo paper does not feed correctly.	When you print on Brother Photo paper, load one extra sheet of the same photo paper in the paper tray. An extra sheet has been included in the paper package for this purpose.
	Clean the paper pick-up rollers. (See *Cleaning the paper pick-up rollers* on page 34.)

Printing (continued)

Difficulty	Suggestions
Machine feeds multiple pages.	Make sure the paper is loaded correctly in the paper tray. (See *Loading paper and other print media* on page 8.)
	Check that more than two types of paper are not loaded in the paper tray at any one time.
There is a paper jam.	Make sure the paper length guide is set to the correct paper size. Do not extend the paper tray when you load A5 or smaller size paper. (See *Printer jam or paper jam* on page 40.)
Printed pages are not stacked neatly.	Make sure you are using the paper support flap. (See *Loading paper and other print media* on page 8.)
Machine does not print from Adobe® Illustrator®.	Try to reduce the print resolution. (See *Printing* for Windows® or *Printing and Faxing* for Macintosh in the *Software User's Guide*.)

Copying Difficulties

Difficulty	Suggestions
Vertical black lines or streaks appear on copies.	Vertical black lines or streaks on copies are typically caused by dirt or correction fluid on the scanner. Clean scanner glass and white plastic above it. (See *Cleaning the scanner glass* on page 34.)
Fit to Page does not work correctly.	Make sure the document is not skewed on the scanner glass. Reposition the document and try again.

Scanning Difficulties

Difficulty	Suggestions
TWAIN or WIA errors appear when starting to scan.	Make sure the Brother TWAIN or WIA driver is chosen as the primary source.

Software Difficulties

Difficulty	Suggestions
Cannot install software or print.	(Windows® users only) Run the **Repair MFL-Pro Suite** program on the Installation CD-ROM. This program will repair and reinstall the software.
"Device Busy"	Make sure the machine is not showing an error message on the LCD.
Cannot print images from FaceFilter Studio.	To use FaceFilter Studio, you must install the FaceFilter Studio application from the Installation CD-ROM supplied with your machine. To install FaceFilter Studio see the *Quick Setup Guide*. Also, before you start FaceFilter Studio for the first time, you must make sure your Brother machine is turned on and connected to your computer. This will allow you to access all the functions of FaceFilter Studio.

PhotoCapture Center™ Difficulties

Difficulty	Suggestions
Removable Disk does not work correctly.	1 Have you installed the Windows® 2000 update? If not, do the following: 1) Unplug the USB cable. 2) Install the Windows® 2000 update using one of the following methods. ■ Install MFL-Pro Suite from the Installation CD-ROM. (See the *Quick Setup Guide*.) ■ Download the latest service pack from the Microsoft Web site. 3) Wait about 1 minute after you restart the PC, and then connect the USB cable. 2 Take out the memory card and put it back in again. 3 If you have tried “Eject” from within Windows®, take out the memory card before you continue. 4 If an error message appears when you try to eject the memory card, it means the card is being accessed. Wait a while and then try again. 5 If all of the above do not work, turn off your PC and machine, and then turn them on again. (You will have to unplug the power cord of the machine to turn it off.)
Cannot access Removable Disk from Desktop icon.	Make sure that you have correctly inserted the memory card.
Part of my photo is missing when printed.	Make sure that Borderless Printing and Cropping are turned off. (See *Borderless printing* in *chapter 4* and *Cropping* in *chapter 4* in the *Advanced User’s Guide*.)

Network Difficulties (DCP-J315W only)

Difficulty	Suggestions
Cannot print over the Network.	Make sure that your machine is powered on and is online and in Ready mode. Print a Network Configuration list (see *Printing reports* in *chapter 2* in the *Advanced User's Guide*) and check the current Network settings printed in this list. (If you are having Network problems, see the *Network User's Guide* for more information.)
The network scanning feature does not work.	(Windows® users) It is necessary to configure third-party Security/Firewall Software to allow Network scanning. To add port 54925 for Network scanning, enter the information below: In Name: Enter any description, for example Brother NetScan. In Port number: Enter 54925. In Protocol: UDP is selected. Please refer to the instruction manual that came with your third-party Security/Firewall Software or contact the software manufacturer. (Macintosh users) Re-select your machine in the **Device Selector** application located in **Macintosh HD**/**Library**/**Printers**/**Brother**/**Utilities**/**DeviceSelector** or from the model list in ControlCenter2.
The Brother software cannot be installed.	(Windows® users) Allow network access to the following programs if your security software displays an alert message during MFL-Pro Suite installation. BrC3Rgin.exe BrnIPMon Brother Status Monitor (Network) ControlCenter Program Generic Host Process f... Setup.exe Spooler SubSystem App wdsw MFC Application (Macintosh users) Re-select your machine in the **Device Selector** application located in **Macintosh HD**/**Library**/**Printers**/**Brother**/**Utilities**/**DeviceSelector** or from the model list in ControlCenter2.
Cannot connect to wireless network.	Investigate the problem using the `WLAN Report`. Press **Menu** key, choose `Print Reports` and then press **OK**. Choose `WLAN Report`. For details, see the *Network User's Guide*.
Reset the network settings.	Press **Menu** key, choose `Network` and then press **OK**. Choose `Network Reset`. For details, see the *Network User's Guide*.

Machine Information

Checking the serial number

You can see the machine's serial number on the LCD.

1. Press **Menu**.
2. Press ▲ or ▼ to choose `Machine Info.`
   Press **OK**.
3. Press ▲ or ▼ to choose `Serial No.`
   Press **OK**.
4. Press **Stop/Exit**.

Reset functions

The following reset functions are available:

1 `Network` (DCP-J315W only)

You can reset the print server back to its default factory settings such as the IP address information.

2 `All Settings`

You can reset all the machine settings back to the settings that were set at the factory.

Brother strongly recommends you use this operation when you dispose of the machine.

How to reset the machine

1. Press **Menu**.
2. Press ▲ or ▼ to choose `Initial Setup`.
   Press **OK**.
3. Press ▲ or ▼ to choose `Reset`.
   Press **OK**.
4. Press ▲ or ▼ to choose the type of reset you want to use.
   Press **OK**.
   Press **+** to confirm.
5. Press **+** to reboot the machine.

B

C Menu and features

On-screen programming

Your machine is designed to be easy to operate with LCD on-screen programming using the menu keys. User-friendly programming helps you take full advantage of all the menu selections your machine has to offer.

Since your programming is done on the LCD, we have created step-by-step on-screen instructions to help you program your machine. All you need to do is follow the instructions as they guide you through the menu selections and programming options.

Menu table

The menu table will help you understand the menu selections and options that are found in the machine's programs. The factory settings are shown in Bold with an asterisk.

Menu (Menu)

Level1	Level2	Level3	Options	Descriptions	Page
Ink Management	**Test Print**	—	Print Quality Alignment	Lets you check the print quality or alignment.	35
	Cleaning	—	Black Color All	Lets you clean the print head.	35
	Ink Volume	—	—	Lets you check the available ink volume.	See [1].
General Setup	**Paper Type**	—	**Plain Paper*** Inkjet Paper Brother BP71 Brother BP61 Other Glossy Transparency	Sets the type of paper in the paper tray.	14
	Paper Size	—	**A4*** A5 10x15cm Letter Legal	Sets the size of the paper in the paper tray.	14
	[1] See *Advanced User's Guide*.				
	The factory settings are shown in Bold with an asterisk.				

C

Level1	Level2	Level3	Options	Descriptions	Page
General Setup (Continued)	**LCD Settings**	**LCD Contrast**	– □ □ □ □ □ + – □ □ □ ■ □ + **–** □ □ ■ □ □ **+*** – □ ■ □ □ □ + – ■ □ □ □ □ +	Adjusts the contrast of the LCD.	See [1].
		Backlight	**Light*** Med Dark	You can adjust the brightness of the LCD backlight.	7
		Dim Timer	Off 10Secs 20Secs **30Secs***	You can set how long the LCD backlight stays on for after you go back to the Ready screen.	See [1].
	Sleep Mode	—	1Min 2Mins 3Mins **5Mins*** 10Mins 30Mins 60Mins	You can choose how long the machine must be idle before it goes into sleep mode.	

[1] See *Advanced User's Guide*.

The factory settings are shown in Bold with an asterisk.

Network menu (DCP-J315W)

Level1	Level2	Level3	Options	Descriptions
Network	**TCP/IP**	**BOOT Method**	**Auto*** Static RARP BOOTP DHCP	Chooses the BOOT method that best suits your needs.
		IP Address	[000-255]. [000-255]. [000-255]. [000-255]	Enter the IP address.
		Subnet Mask	[000-255]. [000-255]. [000-255]. [000-255]	Enter the subnet mask.
		Gateway	[000-255]. [000-255]. [000-255]. [000-255]	Enter the Gateway address.
		Node Name	BRWXXXXXXXXXXXX	You can see the current Node name.
		WINS Config	**Auto*** Static	You can choose the WINS configuration mode.
		WINS Server	(Primary) 000.000.000.000 (Secondary) 000.000.000.000	Specifies the IP address of the primary or secondary server.
		DNS Server	(Primary) 000.000.000.000 (Secondary) 000.000.000.000	Specifies the IP address of the primary or secondary server.
		APIPA	**On*** Off	Automatically allocates the IP address from the link-local address range.
	Setup Wizard	—	—	You can manually configure your print server for a wireless network.
	See *Network User's Guide*.			
	The factory settings are shown in Bold with an asterisk.			

C

Level1	Level2	Level3	Options	Descriptions
Network (Continued)	**WPS/AOSS**	—	—	You can easily configure your wireless network settings using the one-button push method.
	WPS w/PIN Code	—	—	You can easily configure your wireless network settings using WPS with a PIN code.
	WLAN Status	**Status**	—	You can see the current wireless network status.
		Signal	—	You can see the current wireless network signal strength.
		SSID	—	You can see the current SSID.
		Comm. Mode	—	You can see the current Communication Mode.
	MAC Address	—	—	You can see your machine's Mac address from the control panel.
	WLAN Enable	—	On **Off***	Lets you use the wireless network connection.
	Network Reset	—	—	Restores all network settings to factory default.
	See *Network User's Guide*.			
	The factory settings are shown in Bold with an asterisk.			

Menu (Menu) (continued)

Level1	Level2	Level3	Options	Descriptions	Page
Print Reports	**Help List**	—	—	You can print these lists and reports.	See [1].
	User Settings	—	—		
	Network Config (DCP-J315W only)	—	—		
	WLAN Report (DCP-J315W only)	—	—		
Machine Info.	**Serial No.**	—	—	Lets you check the serial number of your machine.	47
Initial Setup	**Date&Time**	—	—	Puts the date and time in your machine.	See [2].
	Reset	**Network** (DCP-J315W only)	—	Resets the print server back to its factory default settings, such as the IP address information.	47
		All Settings	—	Resets all the machine's settings back to the settings that were set at the factory.	47
	Local Language	—	(Choose the language you want to use)	Allows you to change the LCD language for your country.	See [1].

[1] See *Advanced User's Guide*.

[2] See *Quick Setup Guide*.

The factory settings are shown in Bold with an asterisk.

C

Copy (Default display)

Level1	Level2	Level3	Options	Descriptions	Page
Quality	—	—	Fast **Normal*** Best	Choose the Copy resolution for your type of document.	See [1].
Enlarge/Reduce	**100%***	—	—	—	
	Enlarge	—	198% 10x15cm→A4 186% 10x15cm→LTR 142% A5→A4	You can choose the enlargement ratio for the next copy.	
	Reduce	—	97% LTR→A4 93% A4→LTR 83% 69% A4→A5 47% A4→10x15cm	You can choose the reduction ratio for the next copy.	
	Fit to Page	—	—	Your machine will adjust the size automatically to the paper size you set.	
	Custom(25-400%)	—	—	You can choose the enlargement or reduction ratio for the next copy.	
Paper Type	—	—	**Plain Paper*** Inkjet Paper Brother BP71 Brother BP61 Other Glossy Transparency	Choose the paper type that matches the paper in the tray.	22
Paper Size	—	—	**A4*** A5 10x15cm Letter Legal	Choose the paper size that matches the paper in the tray.	22

[1] See *Advanced User's Guide*.

The factory settings are shown in Bold with an asterisk.

Level1	Level2	Level3	Options	Descriptions	Page
Density	—	—	Dark +2 ☐ ☐ ☐ ☐ ■ +1 ☐ ☐ ☐ ■ ☐ 0 ☐ ☐ ■ ☐ ☐ * −1 ☐ ■ ☐ ☐ ☐ −2 ☐ ☐ ☐ ☐ ☐ Light	Adjusts the density of copies.	See [1].
Page Layout	—	—	**Off(1in1)*** 2 in 1 (P) 2 in 1 (L) 4 in 1 (P) 4 in 1 (L) Poster (3x3)	You can make N in 1 or Poster copies.	
Set New Default	—	—	—	You can save your copy settings.	
Factory Reset	—	—	—	You can restore all settings to the factory settings.	

[1] See *Advanced User's Guide*.

The factory settings are shown in Bold with an asterisk.

Photo Capture ( )

Level1	Level2	Level3	Options	Descriptions	Page
View Photo(s)	—	—	See the print settings in the following table.	You can preview your photos on the LCD.	26
Print Index	**6 IMGs/Line*** 5 IMGs/Line	**Paper Type**	**Plain Paper*** Inkjet Paper Brother BP71 Brother BP61 Other Glossy	You can print a thumbnail page.	See [1].
		Paper Size	**A4*** Letter		
Print Photos	—	—	See the print settings in the following table.	You can print an individual image.	
Print All Photos	—	—		You can print all photos in your media card.	

[1] See *Advanced User's Guide*.

The factory settings are shown in Bold with an asterisk.

C

Print Settings

Option1	Option2	Option3	Option4	Descriptions	Page
Print Quality (Does not appear for DPOF printing.)	Normal **Photo***	—	—	Choose the print quality.	See [1].
Paper Type	Plain Paper Inkjet Paper Brother BP71 Brother BP61 **Other Glossy***	—	—	Choose the paper type.	
Paper Size	Letter **10x15cm*** 13x18cm A4	(When Letter or A4 is chosen) 8 x 10cm 9 x 13cm 10 x 15cm 13 x 18cm 15 x 20cm **Max. Size***	—	Choose the paper and print size.	
Brightness	Light +2 ☐ ☐ ☐ ☐ ☐ +1 ☐ ☐ ☐ ▒ ☐ 0 ☐ ☐ ▒ ☐ ☐ * −1 ☐ ■ ☐ ☐ ☐ −2 ■ ☐ ☐ ☐ ☐ Dark	—	—	Adjusts the brightness.	
Contrast	+2 ☐ ☐ ☐ ☐ ☐ +1 ☐ ☐ ☐ ▒ ☐ 0 ☐ ☐ ▒ ☐ ☐ * −1 ☐ ■ ☐ ☐ ☐ −2 ■ ☐ ☐ ☐ ☐	—	—	Adjusts the contrast.	
Cropping	**On*** Off	—	—	Crops the image around the margin to fit the paper size or print size. Turn this feature off if you want to print whole images or prevent unwanted cropping.	
Borderless	**On*** Off	—	—	Expands the printable area to fit the edges of the paper.	

[1] See *Advanced User's Guide*.

The factory settings are shown in Bold with an asterisk.

Option1	Option2	Option3	Option4	Descriptions	Page
Date Print (Does not appear when DPOF Print is chosen.)	On **Off***	—	—	Prints the date on your photo.	See [1].
Set New Default	—	—	—	You can save your print settings.	
Factory Reset	—	—	—	You can restore all the settings to factory settings.	
	[1] See *Advanced User's Guide*.				
	The factory settings are shown in Bold with an asterisk.				

C

Scan ( )

Level1	Option1	Option2	Option3	Descriptions	Page
Scan to File	—	—	—	You can scan a monochrome or a colour document into your computer.	See [1].
Scan to Media (When a memory card is inserted.)	**Quality**	—	**Color 150 dpi*** Color 300 dpi Color 600 dpi B/W 200x100 dpi B/W 200 dpi	You can choose the scan resolution and file format for your document.	27
	File Type	—	(If you chose Colour option in Quality setting) **PDF*** JPEG		
			(If you chose Mono option in Quality setting) TIFF **PDF***		
	File Name	—	—		
	Set New Default	—	—	You can save your scan settings.	See [2].
	Factory Reset	—	—	You can restore all settings to the factory settings.	
Scan to E-mail	—	—	—	You can scan a monochrome or a colour document into your E-mail application.	See [1].
Scan to OCR [3]	—	—	—	You can have your text document converted to an editable text file.	
Scan to Image	—	—	—	You can scan a colour picture into your graphics application.	

1 See *Software User's Guide*.

2 See *Advanced User's Guide*.

3 This function is not available.

The factory settings are shown in Bold with an asterisk.

Entering Text

Press ▲, ▼, ◀ or ▶ to select numbers or characters you want to choose, and press **OK** repeatedly until the file name is complete.

Press ▲, ▼, ◀ or ▶ to select OK, and press **OK**.

Inserting special characters

To enter special characters, press ▲, ▼, ◀ or ▶ to select A1@, and press **OK**.

Making corrections

If you entered an incorrect letter and want to change it, press ▲, ▼, ◀ or ▶ to select < or >. Press **OK** several times to move the cursor under the incorrect character. Then press ▲, ▼, ◀ or ▶ to select ⌫, and press **OK**. Re-enter the correct letter.

C

D Specifications

General

Printer Type	Inkjet	
Print Method	Mono:	Piezo with 94 × 1 nozzle
	Colour:	Piezo with 94 × 3 nozzles
Memory Capacity	32 MB	
LCD (Liquid Crystal Display)	1.9 in. (48.98 mm) STN Colour LCD	
Power Source	AC 220 to 240V 50/60Hz	
Power Consumption [1]	(DCP-J125)	
	Copying Mode:	Approx. 17 W [2]
	Standby Mode:	Approx. 3.5 W
	Sleep Mode:	Approx. 1.5 W
	Off:	Approx. 0.45 W
	(DCP-J315W)	
	Copying Mode:	Approx. 17 W [2]
	Standby Mode:	Approx. 3.5 W
	Sleep Mode:	Approx. 2 W
	Off:	Approx. 0.45 W

1 When all the modes are connected to USB.

2 When resolution: standard, draft: ISO/IEC24712 printed pattern.

Dimensions

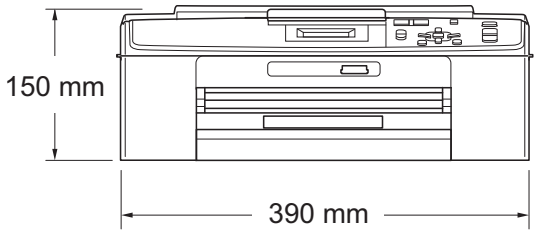

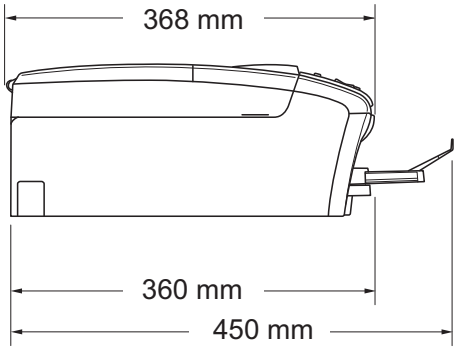

Weight		6.8 kg
Noise	Operating:	50 dB (A) or less [1]
Temperature	Operating:	10 - 35 °C
	Best Print Quality:	20 - 33 °C
Humidity	Operating:	20 - 80% (without condensation)
	Best Print Quality:	20 - 80% (without condensation)
Document Size	Scanner Glass Width: Max. 215.9 mm	
	Scanner Glass Length: Max. 297 mm	

[1] Noise depends on printing conditions.

D

Print media

Paper Input	**Paper Tray** ■ Paper type: Plain paper, inkjet paper (coated paper), glossy paper [1], transparencies [1] [2] and envelopes ■ Paper size: A4, Legal, Executive, Letter, A5, A6, JIS B5, envelopes (commercial No.10, DL, C5, Monarch, JE4), Photo 10 × 15 cm, Photo 2L 13 × 18 cm, Index card and Postcard [3] Width: 98 mm - 215.9 mm Length: 148 mm - 355.6 mm For more details, see *Paper weight, thickness and capacity* on page 18. ■ Maximum paper tray capacity: Approx. 100 sheets of 80 gsm plain paper
Paper Output	Up to 50 sheets of A4 plain paper (face up print delivery to the output paper tray) [1]

1 For glossy paper or transparencies, remove printed pages from the output paper tray immediately after they exit the machine to avoid smudging.

2 Use only transparencies recommended for inkjet printing.

3 See *Paper type and size for each operation* on page 17.

Copy

Colour/Monochrome	Yes/Yes
Copy Width	Max. 210 mm
Multiple Copies	Stacks up to 99 pages
Enlarge/Reduce	25% to 400% (in increments of 1%)
Copy Speed	(DCP-J125) Monochrome: Up to 22 pages/minute (A4 paper) [1] Colour: Up to 20 pages/minute (A4 paper) [1] (DCP-J315W) Monochrome: Up to 23 pages/minute (A4 paper) [1] Colour: Up to 20 pages/minute (A4 paper) [1]
Resolution	(Monochrome) ■ Prints up to 1200 × 1200 dpi (Colour) ■ Prints up to 600 × 1200 dpi

[1] Based on Brother standard pattern (Fast mode/Stack Copy). Copy speeds vary with the complexity of the document.

D

PhotoCapture Center™

Compatible Media [1]	Memory Stick™ (16 MB - 128 MB) Memory Stick PRO™ (256 MB - 16 GB) Memory Stick Duo™ (16 MB - 128 MB) Memory Stick PRO Duo™ (256 MB - 16 GB) Memory Stick Micro™ (M2™) with adapter SD (16 MB to 2 GB) SDHC (4 GB to 16 GB) microSD with adapter miniSD with adapter
Resolution	Up to 1200 × 2400 dpi
File Extension	DPOF (ver.1.0, ver.1.1), Exif DCF (up to ver.2.1)
(Media Format)	Photo Print: JPEG [2]
(Image Format)	Scan to Media: JPEG, PDF (Colour) TIFF, PDF (Monochrome)
Number of Files	Up to 999 files (The folder inside memory cards is also counted.)
Folder	File must be stored in the 4th folder level of the memory card.
Borderless	A4, Letter, Photo 10 × 15 cm, Photo 2L 13 × 18 cm [3]

1 Memory cards and adapters are not included.

2 Progressive JPEG format is not supported.

3 See *Paper type and size for each operation* on page 17.

Scanner

Colour/Monochrome	Yes/Yes
TWAIN Compliant	Yes (Windows® 2000 Professional/Windows® XP/ Windows® XP Professional x64 Edition/Windows Vista®/ Windows® 7)
	Mac OS X 10.4.11, 10.5.x, 10.6.x [1]
WIA Compliant	Yes (Windows® XP [2]/Windows Vista®/Windows® 7)
ICA Compliant	Yes (Mac OS X 10.6.x)
Colour Depth	36 bit colour Processing (Input)
	24 bit colour Processing (Output)
	(Actual Input: 30 bit colour/Actual Output: 24 bit colour)
Resolution	Up to 19200 × 19200 dpi (interpolated) [3]
	Up to 1200 × 2400 dpi (optical)
Scanning Speed	Monochrome: up to 3.44 sec.
	Colour: up to 4.83 sec.
	(A4 size at 100 × 100 dpi)
Scanning Width	Up to 210 mm
Scanning Length	Up to 291 mm
Greyscale	256 levels

1 For the latest driver updates for the Mac OS X you are using, visit us at http://solutions.brother.com/

2 Windows® XP in this User's Guide includes Windows® XP Home Edition, Windows® XP Professional, and Windows® XP Professional x64 Edition.

3 Maximum 1200 × 1200 dpi scanning when using the WIA Driver for Windows® XP, Windows Vista® and Windows® 7 (resolution up to 19200 × 19200 dpi can be chosen by using the Brother scanner utility).

Printer

Resolution	Up to 1200 × 6000 dpi
Printing Width	204 mm [210 mm (borderless) [1]] [3]
Borderless	A4, Letter, A6, Photo 10 × 15 cm, Index Card 127 × 203 mm, Photo 2L 13 × 18 cm, Postcard 1 100 × 148 mm [2]

[1] When you set the Borderless feature to On.

[2] See *Paper type and size for each operation* on page 17.

[3] When printing on A4 size paper.

Interfaces

USB [1] [2]	Use a USB 2.0 interface cable that is no longer than 2 m.
Wireless LAN (DCP-J315W only)	IEEE 802.11b/g (Infrastructure/Ad-hoc Mode)

1 Your machine has a full-speed USB 2.0 interface. This interface is compatible with Hi-Speed USB 2.0; however, the maximum data transfer rate will be 12 Mbits/s. The machine can also be connected to a computer that has a USB 1.1 interface.

2 Third party USB ports are not supported.

Computer requirements

SUPPORTED OPERATING SYSTEMS AND SOFTWARE FUNCTIONS								
Computer Platform & Operating System Version		Supported PC Software Functions	PC Interface	Processor Minimum Speed	Minimum RAM	Recommended RAM	Hard Disk Space to install	
							For Drivers	For Applications
Windows® Operating System [1]	Windows® 2000 Professional	Printing, Scanning, Removable Disk [4]	USB, Wireless 802.11b/g (DCP-J315W)	Intel® Pentium® II or equivalent	64 MB	256 MB	110 MB	340 MB
	Windows® XP Home [2] Windows® XP Professional [2]				128 MB		110 MB	340 MB
	Windows® XP Professional x64 Edition [2]			64-bit (Intel®64 or AMD64) supported CPU	256 MB	512 MB	110 MB	340 MB
	Windows Vista® [2]			Intel® Pentium® 4 or equivalent 64-bit (Intel®64 or AMD64) supported CPU	512 MB	1 GB	600 MB	530 MB
	Windows® 7 [2]				1 GB (32 bit) 2 GB (64 bit)	1 GB (32 bit) 2 GB (64 bit)	650 MB	530 MB
	Windows Server® 2003 (print only via network)	Printing	Wireless 802.11b/g (DCP-J315W)	Intel® Pentium®III or equivalent	256 MB	512 MB	50 MB	N/A
	Windows Server® 2003 x64 Edition (print only via network)			64-bit (Intel®64 or AMD64) supported CPU				
	Windows Server® 2003 R2 (print only via network)			Intel® Pentium®III or equivalent				
	Windows Server® 2003 R2 x64 Edition (print only via network)			64-bit (Intel®64 or AMD64) supported CPU	512 MB	1 GB		
	Windows Server® 2008 (print only via network)			Intel® Pentium® 4 or equivalent 64-bit (Intel®64 or AMD64) supported CPU		2 GB		
	Windows Server® 2008 R2 (print only via network)			64-bit (Intel®64 or AMD64) supported CPU				
Macintosh Operating System	Mac OS X 10.4.11, 10.5.x	Printing, Scanning, Removable Disk [4]	USB [3], Wireless 802.11b/g (DCP-J315W)	PowerPC G4/G5 Intel® Core™ Processor	512 MB	1 GB	80 MB	400 MB
	Mac OS X 10.6.x			Intel® Core™ Processor	1 GB	2 GB		

Conditions:

1 Microsoft® Internet Explorer® 5.5 or greater.

2 For WIA, 1200 × 1200 resolution. Brother Scanner Utility enables to enhance up to 19200 × 19200 dpi.

3 Third party USB ports are not supported.

4 Removable disk is a function of PhotoCapture Center™.

For the latest driver updates, visit us at http://solutions.brother.com/

All trademarks, brand and product names are the property of their respective companies.

Consumable items

Ink	The machine uses individual Black, Cyan, Magenta and Yellow ink cartridges that are separate from the print head assembly.
Service Life of Ink Cartridge	The first time you install a set of ink cartridges the machine will use an amount of ink to fill the ink delivery tubes for high quality printouts. This process will only happen once. After this process is complete the cartridges provided with your machine will have a lower yield than standard cartridges (65%). With all following ink cartridges you can print the specified number of pages.
Replacement Consumables	<Black> LC39BK, <Cyan> LC39C, <Magenta> LC39M, <Yellow> LC39Y Black - Approximately 300 pages [1] Cyan, Magenta, Yellow - Approximately 260 pages [1] [1] Approx. cartridge yield is declared in accordance with ISO/IEC 24711 For more information about the replacement consumables, visit us at www.brother.com/pageyield

What is Innobella™?

Innobella™ is a range of genuine consumables offered by Brother. The name "Innobella™" derives from the words "Innovation" and "Bella" (meaning "Beautiful" in Italian) and is a representation of the "innovative" technology providing you with "beautiful" and "long lasting" print results.

When you print photo images, Brother recommends Innobella™ glossy photo paper (BP71 series) for high quality. Brilliant prints are made easier with Innobella™ Ink and paper.

D

Network (LAN) (DCP-J315W only)

Note

For details about the full Network specifications, see the *Network User's Guide*.

LAN	You can connect your machine to a network for Network Printing, Network Scanning and access photos from PhotoCapture Center™ [1]. Also included is Brother BRAdmin Light [2] Network Management software.	
Wireless Network Security	SSID (32 chr), WEP 64/128 bit, WPA-PSK (TKIP/AES), WPA2-PSK (AES)	
Setup Support Utility	**AOSS™**	Yes
	WPS	Yes

[1] See the Computer Requirements chart on page 68.

[2] If you require more advanced printer management, use the latest Brother BRAdmin Professional utility version that is available as a download from http://solutions.brother.com/

E Index

A

Apple Macintosh
  See Software User's Guide.

C

Cleaning
  paper pick-up roller 34
  print head 35
  scanner 34
Consumable items 69
Control panel overview 4
ControlCenter
  See Software User's Guide.
Copy
  paper size 22
  paper type 22

D

Document
  loading 19

E

Envelopes 10, 11, 17, 18
Error messages on LCD 37
  B&W Print Only 37
  Cannot Print 38
  Cover is Open 38
  Data Remaining 38
  Ink Absorber Full 38
  Ink Absorber NearFull 38
  Ink Low 38
  No Ink Cartridge 39
  No Paper Fed 39
  Out of Memory 39
  Paper Jam 39
  Unable to Clean 39
  Unable to Init. 39
  Unable to Print 39
  Unable to Scan 39

G

Greyscale 65

H

Help
  LCD messages 48
  Menu Table 49

I

Ink cartridges
  ink dot Counter 31
  replacing 31
Innobella™ 69

J

Jams
  paper 40

L

LCD (Liquid Crystal Display) 48
  Brightness 7

M

Macintosh
  See Software User's Guide.
Maintenance, routine
  replacing ink cartridges 31
Mode, entering
  PhotoCapture 5
  Scan 5

N

Network
  Printing
    See Network User's Guide.
  Scanning
    See Software User's Guide.
Number of Copies key 4

O

On/Off key 5
Out of Memory message 39

P

Paper 15, 62
capacity 18
loading 8, 10
loading envelopes and postcards 10
printable area 13
size 14, 17
size of document 19
type 14, 17
PhotoCapture Center™
from PC
See Software User's Guide.
Memory Stick PRO™ 23
Memory Stick™ 23
Preview photos 26
Print settings
Quality 26
SD 23
SDHC 23
specifications 64
Print
area 13
difficulties 42
improving quality 35
on small paper 12
paper jams 40
resolution 66
specifications 66
Programming your machine 48

R

Resolution
copy 63
print 66
scan 65

S

Scannable area 20
Scanner glass
cleaning 34
using 19
Scanning
See Software User's Guide.
Serial Number
how to find ..... See inside front cover

T

Transparencies 14, 15, 16, 17, 18, 62
Troubleshooting 42
error messages on LCD 37
if you are having difficulty
copying 44
Network 46
PhotoCapture Center™ 45
printing 42
scanning 44
software 44
paper jam 40
print alignment 36
print quality 35

W

Windows®
See Software User's Guide.

For Australia Only:

Support – For technical support of your Brother Product other than what you can resolve through the User's Guide, please visit our Web Site or Solutions Web Site (see below) to find an answer to FAQs/Troubleshooting, locating Drivers & Software.

Alternatively, please contact the Product Support Centre for any customer care/technical support enquiry.

To contact Brother International (Aust) Pty Ltd for support on a Brother product please see the details listed below:

Product Support Centre: **Australia**	
Brother International (Aust) Pty Ltd	
Phone:	02 8875 6000
Fax:	02 9870 7223
Solutions Site:	http://solutions.brother.com/
Web Site:	www.brother.com.au
Email:	To submit an e-mail enquiry, visit www.brother.com.au go to **Service and Support** area and follow the prompts.

Our Technical Support Consultants are available 5 days a week by phone during the hours of 8.30am to 5.00pm (EST/EDST) Monday to Friday.

For New Zealand Only:

To contact Brother International (NZ) Limited for support with a Brother product please use the following methods.

Phone:	
Premium End User Assistance	0900 552 152
Auto Attendant Self Help	0800 652 152
Brother Recycle Assistance	0800 632 467
Fax Assistance	0800 837 822
Email Assistance	Please visit **www.brother.co.nz** and submit a helpdesk enquiry from Online Help
Web Assistance	Please visit **www.brother.co.nz** under Online Help for Frequently Asked Questions, Driver downloads, Warranty information and Service Centres

Our Technical Support Consultants are available 7 days a week by phone during the hours of 8.30am to 5pm Monday to Friday and 9am to 5pm Saturday and Sunday. Outside of these hours you can find assistance from our Auto Attendant Self Help and our Website **www.brother.co.nz** under Online Help.

brother®

Visit us on the World Wide Web
http://www.brother.com

This machine is approved for use in the country of purchase only. Local Brother companies or their dealers will only support machines purchased in their own countries.