brother®

ADVANCED USER'S GUIDE

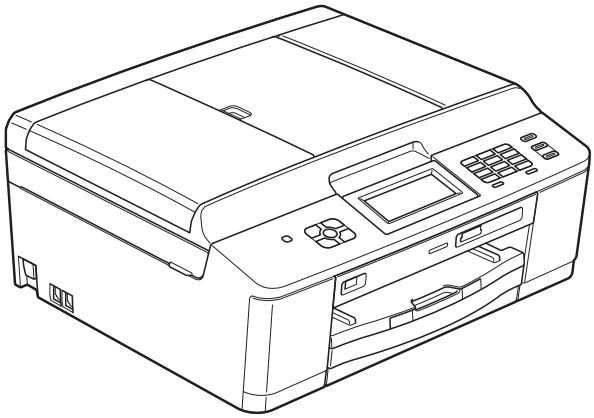

MFC-J625DW
DCP-J525W
DCP-J725DW

Version 0

ARL/ASA/NZ

User's Guides and where do I find it?

Which manual?	What's in it?	Where is it?
Product Safety Guide	Read this Guide first. Please read the Safety Instructions before you set up your machine. See this Guide for trademarks and legal limitations.	Printed / In the box
Quick Setup Guide	Follow the instructions for setting up your machine and installing the drivers and software for the operating system and connection type you are using.	Printed / In the box
Basic User's Guide	Learn the basic Fax (MFC models only), Copy, Scan and PhotoCapture Center™ [1] operations and how to replace consumables. See troubleshooting tips.	Printed / In the box
Advanced User's Guide	Learn more advanced operations: Fax (MFC models only), Copy, security features (MFC models only), printing reports and performing routine maintenance.	PDF file / CD-ROM
Software User's Guide	Follow these instructions for Printing, Scanning, Network Scanning, PhotoCapture Center™ [1], Remote Setup, PC-Fax (MFC models only), Web Services (Scan), and using the Brother ControlCenter utility.	PDF file / CD-ROM
Network Glossary	This Guide provides basic information about advanced network features of Brother machines along with explanations about general networking and common terms.	PDF file / CD-ROM
Network User's Guide	This Guide provides useful information about wireless network settings and security settings using the Brother machine. You can also find supported protocol information for your machine and detailed troubleshooting tips.	PDF file / CD-ROM
Mobile Print/Scan Guide	This Guide provides useful information about printing data from your mobile phone and transmitting scanned data from the Brother machine to your mobile phone.	PDF file / Brother Solutions Center [2]

[1] MFC-J625DW and DCP-J725DW only

[2] Visit us at http://solutions.brother.com/.

Table of Contents

1 General setup 1

IMPORTANT NOTE 1
Memory storage 1
Setting Daylight Saving Time (MFC models only) 1
Sleep Mode 2
Auto Power Down (DCP models only) 2
LCD display 3
- Changing LCD language 3
- LCD Contrast 3
- Setting the Dim Timer for the backlight 3

Mode Timer (MFC models only) 4

2 Security features (MFC models only) 5

TX Lock 5
- Setting and changing the TX Lock password 5
- Turning TX Lock on/off 6

3 Sending a fax (MFC models only) 7

Additional sending options 7
- Sending faxes using multiple settings 7
- Stop faxing 7
- Contrast 7
- Changing fax resolution 8
- Setting your changes as a new default 8
- Restoring fax settings to the factory default 9

Additional sending operations 9
- Sending a fax manually 9
- Sending a fax at the end of a conversation 10
- Dual Access (Monochrome only) 10
- Broadcasting (Monochrome only) 10
- Real Time Transmission 11
- Overseas Mode 12
- Delayed Faxing (Monochrome only) 12
- Delayed Batch Transmission (Monochrome only) 13
- Checking and cancelling waiting jobs 13

Polling overview 14
- Polled Transmit (Monochrome only) 14

4 Receiving a fax (MFC models only) 15

Memory Receive (Monochrome only) 15
Out of Paper Reception 15
Fax Forwarding 15
Fax Storage 16
Printing a fax from the memory 16
PC-Fax Receive (Windows® only) 17
Turning off Memory Receive operations 18
Changing Memory Receive operations 18
Remote Retrieval 19
Setting a Remote Access Code 19
Using your Remote Access Code 19
Remote Fax commands 20
Retrieving fax messages 21
Changing your Fax Forwarding number 21
Additional receiving operations 22
Printing a reduced incoming fax 22
Polling overview 22
Polling receive 22

5 Dialling and storing numbers (MFC models only) 25

Additional dialling operations 25
Combining Quick Dial numbers 25
Additional ways to store numbers 26
Storing Speed Dial numbers from Outgoing Calls 26
Storing Speed Dial numbers from the Caller ID history 27
Setting up groups for Broadcasting 28

6 Printing reports 30

Fax reports (MFC models only) 30
Transmission Verification Report 30
Fax Journal (activity report) 30
Reports 31
How to print a report 31

7 Making copies 32

Copy settings 32
Stop copying 32
Changing copy speed and quality 32
Enlarging or reducing the copied image 33
Making N in 1 copies or a poster (Page Layout) 34
2 in 1 ID Copy 35
Sorting copies using the ADF (MFC-J625DW and DCP-J725DW only) 36
Adjusting Density 36
Duplex (2-sided) copying (MFC-J625DW and DCP-J725DW only) 37
Setting your changes as a new default 38
Restoring all settings to the factory default 38

8 Printing photos from a memory card or USB Flash memory drive (MFC-J625DW and DCP-J725DW only) 39

PhotoCapture Center™ operations 39
Memory cards, USB Flash memory drive and folder structures 39
Print Images 40
Print Index (Thumbnails) 40
Printing Photos 40
Printing All Photos 41
DPOF printing 41
PhotoCapture Center™ print settings 42
Print Quality 42
Paper options 42
Adjusting Brightness, Contrast and Colour 43
Cropping 45
Borderless printing 45
Date Print 45
Setting your changes as a new default 46
Restoring all settings to the factory default 46
Scan to a memory card or USB Flash memory drive 47
How to set a new default 47
How to reset to the factory default 47

9 Printing photos from a camera (MFC-J625DW and DCP-J725DW only) 48

Printing photos directly from a PictBridge camera 48
PictBridge requirements 48
Setting your digital camera 48
Printing Images 49
DPOF printing 50
Printing photos directly from a digital camera (without PictBridge) 50
Printing Images 51

A Routine maintenance 52

Cleaning and checking the machine 52
Cleaning the outside of the machine 52
Cleaning the machine's printer platen 53
Cleaning the paper feed rollers 54
Cleaning the paper pick-up rollers 55
Checking the ink volume 56
Packing and shipping the machine 56

B Glossary 59

C Index 63

1 General setup

IMPORTANT NOTE

- This manual shows the LCD messages of the MFC-J625DW unless specified.
- Most of the illustrations in this User's Guide show the MFC-J625DW.

Memory storage

Your menu settings are stored permanently, and in the event of a power failure will not be lost. Temporary settings (for example, `Overseas Mode`) will be lost. If you have chosen `Set New Default` or `Favorite Settings` for your **FAX**, **SCAN** (or `Scan`) [1], **COPY** (or `Copy`) or **PHOTO** (or `Photo`) [1] preferred settings, those settings will not be lost. However you may have to reset the date and time.

[1] MFC-J625DW and DCP-J725DW only

Setting Daylight Saving Time (MFC models only)

You can set the machine to change for daylight saving time. When selecting `On` it will forward the time by an hour and backward one hour when selecting `Off`. Make sure you have set the correct date and time in the `Date&Time` setting.

1. Press `Menu`.
2. Press ▲ or ▼ to display `General Setup`.
3. Press `General Setup`.
4. Press ▲ or ▼ to display `Daylight Save`.
5. Press `Daylight Save`.
6. Press `Off` (or `On`).
7. Press **Stop/Exit**.

Sleep Mode

You can choose how long the machine will remain idle before it goes into Sleep Mode (up to 60 minutes). The timer will restart if any operation is carried out on the machine.

1. Press `Menu`.
2. Press ▲ or ▼ to display `General Setup`.
3. Press `General Setup`.
4. Press ▲ or ▼ to display `Sleep Mode`.
5. Press `Sleep Mode`.
6. Press ▲ or ▼ to display `1Min`, `2Mins`, `3Mins`, `5Mins`, `10Mins`, `30Mins` or `60Mins` to choose the length of time the machine is idle before entering sleep mode. Press the option you want to set.
7. Press **Stop/Exit**.

Auto Power Down (DCP models only)

The Auto Power Down feature will turn the machine off one hour after entering Sleep Mode. When this feature is `Off`, the machine will not power off automatically.

Note that the machine will not power off automatically when:

- the machine is connected to a wireless network
- `On` is selected in the `WLAN Enable` setting

1. Press `Menu`.
2. Press ▲ or ▼ to display `General Setup`.
3. Press `General Setup`.
4. Press ▲ or ▼ to display `Auto Power Down`.
5. Press `Auto Power Down`.
6. Press `On` (or `Off`).
7. Press **Stop/Exit**.

LCD display

Changing LCD language

You can change the LCD language. [1]

[1] Not available in Australia and New Zealand. (MFC-J625DW only)

1. Press `Menu`.
2. Press ▲ or ▼ to display `Initial Setup`.
3. Press `Initial Setup`.
4. Press ▲ or ▼ to display `Local Language`.
5. Press `Local Language`.
6. Press your language.
7. Press **Stop/Exit**.

LCD Contrast

You can adjust the LCD contrast. If you are having difficulty reading the LCD, try changing the contrast setting.

1. Press `Menu`.
2. Press ▲ or ▼ to display `General Setup`.
3. Press `General Setup`.
4. Press ▲ or ▼ to display `LCD Settings`.
5. Press `LCD Settings`.
6. Press ▲ or ▼ to display `LCD Contrast`.
7. Press `LCD Contrast`.
8. Press ◀ to increase the contrast and press ▶ to decrease the contrast. Press `OK`.
9. Press **Stop/Exit**.

Setting the Dim Timer for the backlight

You can set how long the LCD backlight stays on after the last key press.

1. Press `Menu`.
2. Press ▲ or ▼ to display `General Setup`.
3. Press `General Setup`.
4. Press ▲ or ▼ to display `LCD Settings`.
5. Press `LCD Settings`.
6. Press ▲ or ▼ to display `Dim Timer`.
7. Press `Dim Timer`.
8. Press `10Secs`, `20Secs`, `30Secs` or `Off`.
9. Press **Stop/Exit**.

Mode Timer (MFC models only)

The machine has four temporary mode keys on the control panel: **FAX**, **SCAN**, **COPY** and **PHOTO**. You can change the amount of time the machine takes after the last Scan, Copy or PhotoCapture operation before it returns to FAX mode. If you choose `Off`, the machine stays in the mode you used last by default.

1. Press `Menu`.
2. Press ▲ or ▼ to display `General Setup`.
3. Press `General Setup`.
4. Press ▲ or ▼ to display `Mode Timer`.
5. Press `Mode Timer`.
6. Press ▲ or ▼ to display `0Sec`, `30Secs`, `1Min`, `2Mins`, `5Mins` or `Off`, and then press the option you want to set.
7. Press **Stop/Exit**.

2 Security features (MFC models only)

TX Lock

TX Lock lets you prevent unauthorized access to the machine. You will not be able to continue to schedule Delayed Faxes or Polling jobs. However, any pre-scheduled Delayed Faxes will still be sent even if you turn on TX Lock, so they will not be lost.

While TX Lock is On, the following operations are available:

- Receiving faxes
- Fax Forwarding
  (if Fax Forwarding was already On)
- Remote Retrieval
  (if Fax Storage was already On)
- PC-Fax Receive [1]
  (if PC-Fax Receive was already On)

[1] While the TX Lock feature is turned on, your machine will receive faxes and store them in its memory. Then, when TX Lock is turned off, the faxes will automatically be sent to your chosen PC.

While TX Lock is On, the following operations are NOT available:

- Sending faxes
- Copying
- PC printing
- Scanning
- PhotoCapture
- Operation from the control panel

Note

If you forget the TX Lock password, please call Brother customer service for support.

Setting and changing the TX Lock password

Note

If you have already set the password, you will not need to set it again.

Setting the password

Make a careful note of your password.

1. Press `Menu`.
2. Press ▲ or ▼ to display `Fax`.
3. Press `Fax`.
4. Press ▲ or ▼ to display `Miscellaneous`.
5. Press `Miscellaneous`.
6. Press ▲ or ▼ to display `TX Lock`.
7. Press `TX Lock`.
8. Enter a 4-digit number for the password by pressing the buttons on the screen.
   Press `OK`.
9. When the LCD shows `Verify`, re-enter the password by pressing the buttons on the screen.
   Press `OK`.
10. Press **Stop/Exit**.

Changing the password

1. Press Menu.
2. Press ▲ or ▼ to display Fax.
3. Press Fax.
4. Press ▲ or ▼ to display Miscellaneous.
5. Press Miscellaneous.
6. Press ▲ or ▼ to display TX Lock.
7. Press TX Lock.
8. Press Set Password.
9. Enter the 4-digit number of the current password by pressing the buttons on the screen.
   Press OK.
10. Enter a 4-digit number for the new password by pressing the buttons on the screen.
    Press OK.
11. When the LCD shows Verify, re-enter the new password by pressing the buttons on the screen.
    Press OK.
12. Press **Stop/Exit**.

Turning TX Lock on/off

Turning TX Lock on

1. Press Menu.
2. Press ▲ or ▼ to display Fax.
3. Press Fax.
4. Press ▲ or ▼ to display Miscellaneous.
5. Press Miscellaneous.
6. Press ▲ or ▼ to display TX Lock.
7. Press TX Lock.
8. Press Set TX Lock.
9. Enter the registered 4-digit password by pressing the buttons on the screen.
   Press OK.
   The machine goes offline and the LCD shows TX Lock Mode.

Turning TX Lock off

1. Press Unlock.
2. Enter the registered 4-digit password by pressing the buttons on the screen.
   Press OK.
   TX Lock is automatically turned off.

Note

If you enter the wrong password, the LCD shows Wrong Password and stays offline. The machine will stay in TX Lock mode until the registered password is entered.

3 Sending a fax (MFC models only)

Additional sending options

Sending faxes using multiple settings

When you send a fax you can choose a combination of settings, such as `Fax Resolution`, `Contrast`, `Glass ScanSize`, and `Real Time TX`.

You can also choose: `History`, `Speed Dial`, `Broadcasting`, `Delayed Fax`, `Batch TX`, `Polled TX`, `Polling RX`, `Overseas Mode`, `Set New Default`, and `Factory Reset`.

Some settings are only available when sending mono faxes.

1. Press (**FAX**).
   The LCD shows:

2. Press `Options`.
3. Press ▲ or ▼ to display the setting you want to change. When the setting is displayed, press it.
4. Press ▲ or ▼ to display the available options, and then press the option you want to set.
5. Go back to ❸ to change more settings.

Note

- Most settings are temporary and the machine returns to its default settings after you send a fax.
- You can save some of the settings you use most often by setting them as the default. These settings will remain until you change them again. (See *Setting your changes as a new default* ➤➤ page 8.)

Stop faxing

To stop faxing, press **Stop/Exit**.

Contrast

If your document is very light or very dark, you may want to change the contrast. For most documents the factory setting `Auto` can be used. It automatically chooses the suitable contrast for your document.
Choose `Light` when sending a light document. Choose `Dark` when sending a dark document.

1. Press (**FAX**).
2. Press `Options`.
3. Press ▲ or ▼ to display `Contrast`.
4. Press `Contrast`.
5. Press ▲ or ▼ to display `Auto`, `Light` or `Dark`, and then press the option you want to set.

Note

Even if you choose `Light` or `Dark`, the machine will send the fax using the `Auto` setting in any of the following conditions:

- When you send a colour fax.
- When you choose `Photo` as the Fax Resolution.

Changing fax resolution

The quality of a fax can be improved by changing the fax resolution.

1. Press (**FAX**).
2. Press `Options`.
3. Press ▲ or ▼ to display `Fax Resolution`.
4. Press `Fax Resolution`.
5. Press ▲ or ▼ to display the resolution options, and then press the option you want to set.

Note

You can choose four different resolution settings for monochrome faxes and two for colour.

Monochrome	
`Standard`	Suitable for most typed documents.
`Fine`	Good for small print and transmits a little slower than Standard resolution.
`S.Fine`	Good for small print or artwork and transmits slower than Fine resolution.
`Photo`	Use when the document has varying shades of grey or is a photograph. Photo has the slowest transmission.

Colour	
`Standard`	Suitable for most typed documents.
`Fine`	Use when the document is a photograph. The transmission time is slower than Standard resolution.

If you choose `S.Fine` or `Photo` and then use the **Colour Start** key to send a fax, the machine will send the fax using the `Fine` setting.

Setting your changes as a new default

You can save the settings for the fax options you use most often by setting them as default, such as `Fax Resolution`, `Contrast`, `Glass ScanSize`, and `Real Time TX`. These settings will remain until you change them again.

1. Press (**FAX**).
2. Press `Options`.
3. Press ▲ or ▼ to choose the menu option that you want to change. Press your new option.

   Repeat this step for each setting you want to change.
4. After changing the last setting, press ▲ or ▼ to display `Set New Default`.
5. Press `Set New Default`.
6. Press `OK`.
7. Press `Yes`.
8. Press **Stop/Exit**.

Restoring fax settings to the factory default

You can restore all the fax settings you have changed to the factory default. These settings will remain until you change them again.

1. Press (**FAX**).
2. Press `Options`.
3. Press ∧ or ∨ to display `Factory Reset`.
4. Press `Factory Reset`.
5. Press `Yes`.
6. Press **Stop/Exit**.

Additional sending operations

Sending a fax manually

Manual transmission lets you hear the dialling, ringing and fax-receiving tones while sending a fax.

Note

To send a multiple page fax, use the ADF.

1. Press (**FAX**).
2. Load your document.
3. To listen for a dial tone, press **Hook**.
4. Dial the fax number.
5. When you hear the fax tone, press **Mono Start** or **Colour Start**.
   If you are using the scanner glass, press `Send` on the Touchscreen to send the fax.

Sending a fax at the end of a conversation

At the end of a conversation, you can send a fax to the other party before you both hang up.

1. Ask the other party to wait for fax tones (beeps) and then to press the Start or Send key before hanging up.
2. Press (**FAX**).
3. Load your document.
4. Press **Mono Start** or **Colour Start**.
   - If you are using the scanner glass, press `Send` to send the fax.
5. Replace the handset of the external phone.

Dual Access (Monochrome only)

You can dial a number and start scanning the fax into memory—even when the machine is sending from memory, receiving faxes or printing PC data. The LCD shows the new job number.

The number of pages you can scan into the memory will vary depending on the data that is printed on them.

Note

If the `Out of Memory` message appears, press **Stop/Exit** to cancel or **Mono Start** to send the pages scanned so far.

Broadcasting (Monochrome only)

Broadcasting is when the same fax message is automatically sent to more than one fax number. You can include Groups and Speed Dial numbers in the same broadcast.

After the broadcast is finished, a Broadcast Report will be printed.

Before you begin the broadcast

Speed Dial numbers must be stored in the machine's memory before they can be used in a broadcast. (➤➤Basic User's Guide: *Storing Speed Dial numbers*)

Group numbers must also be stored in the machine's memory before they can be used in a broadcast. Group numbers include many stored Speed Dial numbers for easier dialling. (See *Setting up groups for Broadcasting* ➤➤ page 28.)

How to broadcast a fax

1. Press (**FAX**).
2. Load your document.
3. Press `Options`.
4. Press ▲ or ▼ to display `Broadcasting`.
5. Press `Broadcasting`.
6. Press `Add number from SpeedDial`.
   Press #01 A to search by Alphabetical Order or Numerical Order. Press the check boxes of the numbers you want to add to the broadcast. After you have checked all the numbers you want to add, press `OK`.
7. Press `OK`.

8 Press **Mono Start**.

Faxing from the ADF

- The machine starts scanning the document.

Faxing from the scanner glass

When the LCD shows `Next Page?`, do one of the following:

- To send a single page, press `No (Send)` (or press **Mono Start** again).

  The machine starts sending the document.
- To send more than one page, press `Yes` and place the next page on the scanner glass.

  Press `OK`.

  The machine starts scanning the page. (Repeat this step for each additional page.)

Note

- If you did not use up any of the numbers for Groups, you can "broadcast" faxes to as many as 200 different numbers.
- The machine's available memory will vary depending on the types of jobs in the memory and the number of locations used for broadcasting. If you broadcast to the maximum numbers available, you will not be able to use dual access and delayed fax.
- If the `Out of Memory` message appears, press **Stop/Exit** to cancel or **Mono Start** to send the pages scanned so far.

Cancelling a Broadcast in progress

1 Press **Stop/Exit**.

2 Do one of the following:

- To cancel the entire broadcast, press `Entire Broadcast`. Go to step ❸.
- To cancel the current job, press the button that displays the number being dialled. Go to step ❹.
- To exit without cancelling, press **Stop/Exit**.

3 When the LCD asks if you want to cancel the entire broadcast, do one of the following:

- Press `Yes` to confirm.
- To exit without cancelling, press `No` or **Stop/Exit**.

4 Do one of the following:

- To cancel the current job, press `Yes`.
- To exit without cancelling, press `No` or **Stop/Exit**.

Real Time Transmission

When you are sending a fax, the machine will scan the documents into the memory before sending. Then, as soon as the telephone line is free, the machine will start dialling and sending.

Sometimes, you may want to send an important document immediately, without waiting for memory transmission. You can do this by turning on `Real Time TX`.

1 Press (**FAX**).

2 Load your document.

3 Press `Options`.

4 Press ▲ or ▼ to display `Real Time TX`.

5 Press `Real Time TX`.

6 Press `On`.

7 Press ⮌ so you can continue sending your fax.

Note

- If you are sending a colour fax or if the memory is full and you are sending a black & white fax from the ADF, the machine will send the document in real time (even if `Real Time TX` is set to `Off`).
- In Real Time Transmission, the automatic redial feature does not work when you are using the scanner glass.

Overseas Mode

If you are having difficulty sending a fax overseas due to possible interference on the telephone line, we recommend that you turn on Overseas Mode. After you send a fax using this feature, the feature will automatically turn itself off.

1 Press (**FAX**).

2 Load your document.

3 Press `Options`.

4 Press ∧ or ∨ to display `Overseas Mode`.

5 Press `Overseas Mode`.

6 Press `On` (or `Off`).

7 Press ⮌ so you can continue sending your fax.

Delayed Faxing (Monochrome only)

You can store up to 50 faxes in the memory to be sent within 24 hours. These faxes will be sent at the time of day you enter in step ❼.

1 Press (**FAX**).

2 Load your document.

3 Press `Options`.

4 Press ∧ or ∨ to display `Delayed Fax`.

5 Press `Delayed Fax`.

6 Press `On`.

7 Enter the time you want the fax to be sent (in 24-hour format) by pressing the buttons on the Touchscreen.
(For example, enter 19:45 for 7:45 PM.)
Press `OK`.

Note

The number of pages you can scan into the memory depends on the amount of data that is printed on each page.

8 Press ⮌, and then enter the fax number and press **Mono Start**.

Delayed Batch Transmission (Monochrome only)

Before sending the delayed faxes, your machine will help you economize by sorting all the faxes in the memory by destination and scheduled time. All delayed faxes that are scheduled to be sent at the same time to the same fax number will be sent as one fax to save transmission time.

1. Press (**FAX**).
2. Press `Options`.
3. Press ▲ or ▼ to display `Batch TX`.
4. Press `Batch TX`.
5. Press `On`.
6. Press **Stop/Exit**.

Checking and cancelling waiting jobs

You can check which jobs are still waiting in the memory to be sent, or cancel a job. (If there are no jobs, the LCD shows `No Jobs Waiting`.)

1. Press `Menu`.
2. Press ▲ or ▼ to display `Fax`.
3. Press `Fax`.
4. Press ▲ or ▼ to display `Remaining Jobs`.
5. Press `Remaining Jobs`.
   Any waiting jobs appear on the LCD.
6. Press ▲ or ▼ to scroll through the jobs and press the job you want to cancel. Press `OK`.
7. Do one of the following:
   - To cancel, press `Yes`.

     If you want to cancel another job go to step ❻.
   - To exit without cancelling, press `No`.
8. When you have finished, press **Stop/Exit**.

Polling overview

Polling lets you set up your machine so other people can receive faxes from you, but they pay for the call. It also lets you call somebody else's fax machine and receive a fax from it, so you pay for the call. The polling feature needs to be set up on both machines for this to work. Not all fax machines support polling.

Polled Transmit (Monochrome only)

Polled transmit lets you set up your machine to wait with a document so another fax machine can call and retrieve it.

The document will be stored and can be retrieved by any other fax machine until you delete it from the memory. (See *Checking and cancelling waiting jobs* ➤➤ page 13.)

Setup for polled transmit

1. Press (**FAX**).
2. Load your document.
3. Press `Options`.
4. Press ▲ or ▼ to display `Polled TX`.
5. Press `Polled TX`.
6. Press ▲ or ▼ to display `Standard`.
7. Press `Standard`.
8. Press **Mono Start**.
9. If you are using the scanner glass, the LCD will prompt you to choose one of the following options:
   - Press `Yes` to scan another page. Go to step ❿.
   - Press `No (Send)` or **Mono Start** to send the document.
10. Place the next page on the scanner glass and press `OK`. Repeat steps ❾ and ❿ for each additional page. Your machine will automatically send the fax when it is polled.

Setup for polled transmit with secure code

Secure Polling lets you restrict who can get the documents you set up to be polled.

Secure Polling only works with Brother fax machines. If another person wants to retrieve a fax from your machine, they will have to enter the secure code.

1. Press (**FAX**).
2. Load your document.
3. Press `Options`.
4. Press ▲ or ▼ to display `Polled TX`.
5. Press `Polled TX`.
6. Press ▲ or ▼ to display `Secure`.
7. Press `Secure`.
8. Enter a four-digit number. Press `OK`.
9. Press **Mono Start**.
10. If you are using the scanner glass, the LCD will prompt you to choose one of the following options:
    - Press `Yes` to scan another page. Go to step ⓫.
    - Press `No (Send)` or **Mono Start** to send the document.
11. Place the next page on the scanner glass and press `OK`.
12. Repeat steps ❿ and ⓫ for each additional page. Your machine will automatically send the fax.

4 Receiving a fax (MFC models only)

Memory Receive (Monochrome only)

You can only use one Memory Receive operation at a time:

- Fax Forwarding
- Fax Storage
- PC-Fax Receive
- Off

You can change your selection at any time. If received faxes are still in the machine's memory when you change the Memory Receive operation, a message will appear on the LCD. (See *Changing Memory Receive operations* ➤➤ page 18.)

Out of Paper Reception

As soon as the paper tray becomes empty during fax reception, the LCD shows `No Paper Fed`. Put some paper in the paper tray. (➤➤Basic User's Guide: *Loading paper and other print media*)

If you don't put paper in the paper tray, the machine will carry on receiving the fax, with the remaining pages being stored in memory, if enough memory is available.

Further incoming faxes will also be stored in memory until the memory is full. To print the faxes, put fresh paper in the tray. When the memory is full, the machine will stop automatically answering calls.

Fax Forwarding

When you choose Fax Forward, your machine stores the received fax in the memory. The machine will then dial the fax number you have programmed and forward the fax message.

1. Press `Menu`.
2. Press ∧ or ∨ to display `Fax`.
3. Press `Fax`.
4. Press ∧ or ∨ to display `Setup Receive`.
5. Press `Setup Receive`.
6. Press ∧ or ∨ to display `Memory Receive`.
7. Press `Memory Receive`.
8. Press ∧ or ∨ to display `Fax Forward`.
9. Press `Fax Forward`.
10. Enter the forwarding number (up to 20 digits) by pressing the buttons on the Touchscreen.
    Press `OK`.
11. Press `Backup Print:On` or `Backup Print:Off`.

IMPORTANT

- If you choose `Backup Print:On`, the machine will also print the fax at your machine so you will have a copy. This is a safety feature in case there is a power failure before the fax is forwarded or a problem at the receiving machine.
- When you receive a colour fax, your machine prints the colour fax at your machine but does not send the fax to the fax forwarding number you programmed.

12 Press **Stop/Exit**.

Fax Storage

If you choose Fax Storage, your machine stores received faxes in the memory. You will be able to retrieve fax messages from another location using the remote retrieval commands.

If you have turned on Fax Storage, a backup copy will automatically be printed at the machine.

1 Press `Menu`.

2 Press ▲ or ▼ to display `Fax`.

3 Press `Fax`.

4 Press ▲ or ▼ to display `Setup Receive`.

5 Press `Setup Receive`.

6 Press ▲ or ▼ to display `Memory Receive`.

7 Press `Memory Receive`.

8 Press ▲ or ▼ to display `Fax Storage`.

9 Press `Fax Storage`.

10 Press **Stop/Exit**.

Note

Colour faxes cannot be stored in the memory. When you receive a colour fax, your machine prints the colour fax at your machine.

Printing a fax from the memory

If you have chosen Fax Storage, you can still print a fax from the memory when you are at your machine.

1 Press `Menu`.

2 Press ▲ or ▼ to display `Fax`.

3 Press `Fax`.

4 Press ▲ or ▼ to display `Print Document`.

5 Press `Print Document`.

6 Press `Start`.

7 Press **Stop/Exit**.

Note

When you print a fax from the memory, the fax data will be erased from your machine.

PC-Fax Receive (Windows® only)

If you turn on the PC-Fax Receive feature your machine will store received faxes in memory and send them to your PC automatically. You can then use your PC to view and store these faxes.

Even if you have turned off your PC (at night or on the weekend, for example), your machine will receive and store your faxes in its memory.

When you start your PC and the PC-FAX Receiving software runs, your machine transfers your faxes to your PC automatically.

To transfer the received faxes to your PC you must have the PC-FAX Receiving software running on your PC.
(➤➤Software User's Guide: *PC-FAX receiving*)

If you choose `Backup Print:On` the machine will also print the fax.

1. Press `Menu`.
2. Press ▲ or ▼ to display `Fax`.
3. Press `Fax`.
4. Press ▲ or ▼ to display `Setup Receive`.
5. Press `Setup Receive`.
6. Press ▲ or ▼ to display `Memory Receive`.
7. Press `Memory Receive`.
8. Press ▲ or ▼ to display `PC Fax Receive`.
9. Press `PC Fax Receive`.
10. The LCD shows the message `Run PC-Fax on your computer`. Press `OK`.
11. Press `<USB>` or, for network users, the name of the PC you want to receive faxes to.
12. Press `Backup Print:On` or `Backup Print:Off`.
13. Press **Stop/Exit**.

Note

- PC-Fax Receive is not supported by Mac OS.
- Before you can set up PC-Fax Receive you must install the MFL-Pro Suite software on your PC. Make sure your PC is connected and turned on. (➤➤Software User's Guide: *PC-FAX receiving*)
- If you get an error message and the machine cannot print the faxes in memory, you can use this setting to transfer your faxes to your PC. (➤➤Basic User's Guide: *Transferring your faxes or Fax Journal report*)
- When you receive a colour fax, your machine prints the colour fax at your machine but does not send the fax to your PC.
- To change the destination PC, repeat steps ❶ to ⓭.

Turning off Memory Receive operations

1. Press `Menu`.
2. Press ▲ or ▼ to display `Fax`.
3. Press `Fax`.
4. Press ▲ or ▼ to display `Setup Receive`.
5. Press `Setup Receive`.
6. Press ▲ or ▼ to display `Memory Receive`.
7. Press `Memory Receive`.
8. Press `Off`.
9. Press **Stop/Exit**.

Note

The LCD will show you more options if there are received faxes still in the machine's memory. (See *Changing Memory Receive operations* ➤➤ page 18.)

Changing Memory Receive operations

If there are received faxes in your machine's memory when you change the Memory Receive Operations, the LCD will ask you one of the following questions:

- `Erase All Doc?`
- `Print All Fax?`
  - If you press `Yes`, faxes in the memory will be erased or printed before the setting changes. If a backup copy has already been printed it will not be printed again.
  - If you press `No`, faxes in the memory will not be erased or printed and the setting will be unchanged.

If received faxes are left in the machine's memory when you change to `PC Fax Receive` from another option [`Fax Forward` or `Fax Storage`], press ▲ or ▼ to choose the PC.

The LCD will ask you the following question:

- `Send Fax to PC?`
  - If you press `Yes`, faxes in the memory will be sent to your PC before the setting changes. You will be asked if you want to turn on Backup Print. (For details, see *PC-Fax Receive (Windows® only)* ➤➤ page 17.)
  - If you press `No`, faxes in the memory will not be erased or transferred to your PC and the setting will be unchanged.

Remote Retrieval

You can call your machine from any touch-tone telephone or fax machine and then use the remote access code and remote commands to retrieve fax messages.

Setting a Remote Access Code

The Remote Access Code lets you access the remote retrieval features when you are away from your machine. Before you can use the remote access and retrieval features, you have to set up your own code. The factory default code is the inactive code (---∗).

1. Press `Menu`.
2. Press ∧ or ∨ to display `Fax`.
3. Press `Fax`.
4. Press ∧ or ∨ to display `Remote Access`.
5. Press `Remote Access`.
6. Enter a three-digit code using numbers `0-9`, ∗, or # by pressing the buttons on the Touchscreen.
   Press `OK`.
   (The preset '∗' cannot be changed.)

Note

Do not use the same code as your Remote Activation Code (∗ **5 1** (∗ **9 1** for New Zealand)) or Remote Deactivation Code (**# 5 1** (**# 9 1** for New Zealand)). (➤➤Basic User's Guide: *Operation from external and extension telephones*)

7. Press **Stop/Exit**.

Note

You can change your code at any time by entering a new one. If you want to make your code inactive, press ⊠ in step ❻ to restore the inactive setting (---∗) and press `OK`.

Using your Remote Access Code

1. Dial your fax number from a touch-tone telephone or another fax machine.
2. When your machine answers, enter your remote access code (3 digits followed by ∗) at once.
3. The machine signals if it has received messages:
   - **1 long beep — Fax messages**
   - **No beeps — No messages**
4. When the machine gives two short beeps, enter a command.
   The machine will hang up if you wait longer than 30 seconds to enter a command.
   The machine will beep three times if you enter an invalid command.
5. Press **9 0** to stop Remote Access when you have finished.
6. Hang up.

Note

If your machine is set to `Manual` mode and you want to use the remote retrieval features, wait for about 100 seconds after it starts ringing, and then enter the remote access code within 30 seconds. This function may not be available in some countries e.g. Australia.

Remote Fax commands

Follow the commands below to access features when you are away from the machine. When you call the machine and enter your remote access code (3 digits followed by ∗), the system will give two short beeps and you must enter a remote command.

Remote commands		Operation details
95	**Change the Fax Forwarding or Fax Storage settings**	
	1 OFF	You can choose `Off` after you have retrieved or erased all your messages.
	2 Fax Forwarding	One long beep means the change is accepted. If you hear three short beeps, the change was not accepted because something has not been set up (for example, a Fax Forwarding number has not been registered). You can register your Fax Forwarding number by entering 4. (See *Changing your Fax Forwarding number* ➤➤ page 21.) Once you have registered the number, Fax Forwarding will work.
	4 Fax Forwarding number	
	6 Fax Storage	
96	**Retrieve a fax**	
	2 Retrieve all faxes	Enter the number of a remote fax machine to receive stored fax messages. (See *Retrieving fax messages* ➤➤ page 21.)
	3 Erase faxes from the memory	If you hear one long beep, fax messages have been erased from the memory.
97	**Check the receiving status**	
	1 Fax	You can check whether your machine has received any faxes. If yes, you will hear one long beep. If no, you will hear three short beeps.
98	**Change the Receive Mode**	
	1 External TAD	If you hear one long beep, your change has been accepted.
	2 Fax/Tel	
	3 Fax Only	
90	**Exit**	Pressing **9 0** allows you to exit remote retrieval. Wait for the long beep, then replace the handset.

Retrieving fax messages

You can call your machine from any touch-tone telephone and have your fax messages sent to another machine. Before you use this feature, you have to turn on Fax Storage. (*Fax Storage* ➤➤ page 16)

1. Dial your fax number.
2. When your machine answers, enter your remote access code (3 digits followed by ∗) at once. If you hear one long beep, you have messages.
3. When you hear two short beeps, press **9 6 2**.
4. Wait for a long beep, and then use the dial pad to enter the number of the remote fax machine where you want your fax messages sent, followed by **# #** (up to 20 digits).

Note

You cannot use ∗ and # as dial numbers. However, press **#** if you want to create a pause.

5. Hang up after you hear your machine beep. Your machine will call the other fax machine, which will then print your fax messages.

Changing your Fax Forwarding number

You can change the default setting of your fax forwarding number from another touch-tone telephone or fax machine.

1. Dial your fax number.
2. When your machine answers, enter your remote access code (3 digits followed by ∗) at once. If you hear one long beep, you have messages.
3. When you hear two short beeps, press **9 5 4**.
4. Wait for the long beep, enter the new number (up to 20 digits) of the remote fax machine you want your fax messages forwarded to using the dial pad, then enter **# #**.

Note

You cannot use ∗ and # as dial numbers. However, press **#** if you want to create a pause.

5. Press **9 0** to stop Remote Access when you have finished.
6. Hang up after you hear your machine beep.

Additional receiving operations

Printing a reduced incoming fax

If you choose On, the machine automatically reduces each page of an incoming fax to fit on one page of A4, Letter or Legal [1] size paper. The machine calculates the reduction ratio by using the page size of the fax and your Paper Size setting. (➤➤Basic User's Guide: *Paper Size*)

[1] Only available for some countries.

1. Press Menu.
2. Press ▲ or ▼ to display Fax.
3. Press Fax.
4. Press ▲ or ▼ to display Setup Receive.
5. Press Setup Receive.
6. Press ▲ or ▼ to display Auto Reduction.
7. Press Auto Reduction.
8. Press On (or Off).
9. Press **Stop/Exit**.

Polling overview

Polling lets you set up your machine so other people can receive faxes from you, but they pay for the call. It also lets you call somebody else's fax machine and receive a fax from it, so you pay for the call. The polling feature needs to be set up on both machines for this to work. Not all fax machines support polling.

Polling receive

Polling receive lets you call another fax machine to receive a fax.

Setup to receive polling

1. Press (**FAX**).
2. Press Options.
3. Press ▲ or ▼ to display Polling RX.
4. Press Polling RX.
5. Press ▲ or ▼ to display Standard.
6. Press Standard.
7. Enter the fax number you are polling using Speed Dial or the dial pad on the control panel.
8. Press **Mono Start** or **Colour Start**.

Setup to receive polling with secure code

Secure Polling lets you restrict who can get the documents you set up to be polled.

Secure Polling only works with Brother fax machines. If you want to get a fax from a secured Brother machine you have to enter the secure code.

1. Press (**FAX**).
2. Press Options.
3. Press ▲ or ▼ to display Polling RX.
4. Press Polling RX.
5. Press ▲ or ▼ to display Secure.
6. Press Secure.
7. Enter a four-digit secure code by pressing the buttons on the screen. This is the same as the security code of the fax machine you are polling. Press OK.
8. Enter the fax number you are polling by either using a Speed Dial or the dial pad on the control panel.
9. Press **Mono Start** or **Colour Start**.

Setup to receive delayed polling

Delayed polling lets you set the machine to begin polling receive at a later time. You can only set up *one* delayed polling operation.

1. Press (**FAX**).
2. Press Options.
3. Press ▲ or ▼ to display Polling RX.
4. Press Polling RX.
5. Press Timer.
6. Enter the time (in 24-hour format) you want to start polling. For example, enter 21:45 for 9:45 PM. Press OK.
7. Enter the fax number you are polling by either using a Speed Dial or the dial pad on the control panel.
8. Press **Mono Start** or **Colour Start**. The machine makes the polling call at the time you entered.

Sequential polling (Monochrome only)

Sequential polling lets you request documents from several fax machines in one operation.

1. Press (**FAX**).
2. Press Options.
3. Press ▲ or ▼ to display Polling RX.
4. Press Polling RX.
5. Press Standard, Secure or Timer.
6. Do one of the following:
   - If you chose Standard, go to step ❼.
   - If you chose Secure, enter a four-digit number, press OK, go to step ❼.
   - If you chose Timer, enter the time (24-hour format) you want to begin polling and press OK, go to step ❼.
7. Press Options. Press ▲ or ▼ to display Broadcasting.
8. Press Broadcasting.

9 Press
`Add number from SpeedDial`.
Press #01 A to choose alphabetical order or numerical order. Press the check boxes of the numbers you want to add to the broadcast. After you have checked all the numbers you want, press `OK`.

10 Press `OK`.

11 Press **Mono Start**.
The machine polls each number or group in turn for a document.

Press **Stop/Exit** while the machine is dialling to cancel the polling process.

To cancel all sequential polling receive jobs, see *Checking and cancelling waiting jobs* ➤➤ page 13.

Cancelling a Sequential Polling Job

1 Press **Stop/Exit**.

2 Do one of the following:

- To cancel the entire sequential polling job, press `Entire Seq. Poll`. Go to step ❸.
- To cancel the current job, press the button that displays the number being dialled. Go to step ❹.
- To exit without cancelling, press **Stop/Exit**.

3 When the LCD asks if you want to cancel the entire sequential polling job, do one of the following:

- Press `Yes` to confirm.
- To exit without cancelling, press `No` or **Stop/Exit**.

4 Do one of the following:

- To cancel the current job, press `Yes`.
- To exit without cancelling, press `No` or **Stop/Exit**.

5 Dialling and storing numbers (MFC models only)

Additional dialling operations

Combining Quick Dial numbers

Sometimes, you may want to choose from several long distance carriers when you send a fax. Rates may vary depending on the time and destination. To take advantage of low rates, you can store the access codes of long-distance carriers and credit card numbers as Speed Dial numbers. You can store these long dialling sequences by dividing them and setting them up as separate Speed Dial numbers in any combination. You can even include manual dialling using the dial pad. (➤➤Basic User's Guide: *Storing Speed Dial numbers*)

For example, you might have stored '01632' on Speed Dial: 03 and '960555' on Speed Dial: 02. You can use them both to dial '01632-960555' if you press the following buttons on the Touchscreen:

1. Press `SpeedDial`.
2. Press `Numerical`.
3. Press ∧ or ∨ to display `#03`.
4. Press `#03`.
5. Press `Send a fax`.
6. Press `Options`.
7. Press ∧ or ∨ to display `Speed Dial`.
8. Press `Speed Dial`.
9. Press `Numerical`.
10. Press ∧ or ∨ to display `#02`.
11. Press `#02`.
12. Press `Send a fax`.
13. Press **Mono Start** or **Colour Start**. You will dial '01632-960555'.

To temporarily change a number, you can substitute part of the number with manual dialling using the dial pad. For example, to change the number to 01632-960556 you could press `SpeedDial`, press **03**, press `Send a fax`, and then press **960556** using the dial pad.

Note

If you must wait for another dial tone or signal at any point in the dialling sequence, create a pause in the number by pressing **Redial/Pause**. Each key press adds a 3.5-second delay.

Additional ways to store numbers

Storing Speed Dial numbers from Outgoing Calls

You can also store Speed Dial numbers from the Outgoing Call history.

1. Press **Redial/Pause**.
   You can also choose the number by pressing History.

Note

You can also add numbers from the history in a different way. First, press Menu, and then Fax, Setup Speed Dial, Set Speed Dial and Add Number from History.

2. Press ▲ or ▼ to display the name or number you want to store.
3. Press the name or number you want to store.
4. Press More.
5. Press Add Speed Dial.
6. Do one of the following:
   - Enter the name (up to 16 characters) by pressing the buttons on the Touchscreen.

     (➤➤Basic User's Guide: *Entering Text*)

     Press OK.
   - To store the number without a name, press OK.
7. Press OK to confirm the fax or telephone number you want to store.
8. Do one of the following:
   - Enter the second fax or telephone number (up to 20 digits) by pressing the buttons on the Touchscreen.

     Press OK.
   - If you do not want to store a second number, press OK.
9. To choose where the number will be stored, do one of the following:
   - To accept the displayed next available Speed Dial location, press OK.
   - To enter a different Speed Dial location, press ⌫ and a 2-digit number by pressing the buttons on the Touchscreen.

     Press OK.

Note

If the 2-digit Speed Dial location you choose is already taken, the OK button on the LCD will not work. Choose a different location.

10. When the LCD displays your settings, press OK to confirm.
11. Press **Stop/Exit**.

Storing Speed Dial numbers from the Caller ID history

If you have the Caller ID subscriber service from your telephone company, you can also store Speed Dial numbers from incoming calls in the Caller ID History.
(➤➤Basic User's Guide: *Caller ID*)

1. Press **Redial/Pause**.
   You can also choose the number by pressing History.

Note

You can also add numbers from the history in a different way. First, press Menu, and then Fax, Setup Speed Dial, Set Speed Dial and Add Number from History.

2. Press .
3. Press ∧ or ∨ to display the number you want to store.
4. Press the number you want to store.
5. Press More.
6. Press Add Speed Dial.
7. Do one of the following:
   - Enter the name (up to 16 characters) by pressing the buttons on the Touchscreen.
     (➤➤Basic User's Guide: *Entering Text*)
     Press OK.
   - To store the number without a name, press OK.
8. Press OK to confirm the fax or telephone number you want to store.
9. Do one of the following:
   - Enter a second fax or telephone number (up to 20 digits) by pressing the buttons on the Touchscreen.
     Press OK.
   - If you do not want to store a second number, press OK.
10. To choose where the number will be stored, do one of the following:
    - To accept the displayed next available Speed Dial location, press OK.
    - To enter a different Speed Dial location, press ⌫ and a 2-digit number by pressing the buttons on the Touchscreen.
      Press OK.

Note

If the 2-digit Speed Dial location you choose is already taken, the OK button on the LCD will not work. Choose a different location.

11. When the LCD displays your settings, press OK to confirm.
12. Press **Stop/Exit**.

Setting up groups for Broadcasting

Groups, which can be stored on a Speed Dial location, allow you to send the same fax message to many fax numbers by pressing `SpeedDial`, the two-digit location, `Send a fax` and **Mono Start**.

First, you'll need to store each fax number in Speed Dial location. (➤➤Basic User's Guide: *Storing Speed Dial numbers*) Then you can include them as numbers in the Group. Each Group uses up a Speed Dial location. You can have up to six Groups, or you can assign up to 198 numbers to a large Group.

(See *Broadcasting (Monochrome only)* ➤➤ page 10.)

1. Press `SpeedDial`.
2. Press `Alphabetical` or `Numerical`.
3. Press `More`.
4. Press ∧ or ∨ to display `Setup Groups`.
5. Press `Setup Groups`.
6. Enter the group name (up to 16 characters) by pressing the buttons on the Touchscreen.
   Press `OK`.
7. When the LCD displays the next available Group number, press `OK`.
   This Group number and name will automatically be assigned to the next available Speed Dial location.
8. Add Speed Dial numbers to the Group by pressing them to display a red checkmark. Press `OK`.
   If you want to list the numbers in alphabetical order, press #01 A.
9. When the LCD displays the Group Name and numbers, press `OK` to confirm.
10. Do one of the following:
    - To store another Group for broadcasting, repeat steps ❸ to ❾.
    - To finish storing Groups for broadcasting, press **Stop/Exit**.

Note

You can print a list of all the Speed Dial numbers. Group numbers will be marked in the GROUP column. (See *Reports* ➤➤ page 31.)

Changing a Group name

1. Press `SpeedDial`.
2. Press `Alphabetical` or `Numerical`.
3. Press `More`.
4. Press ∧ or ∨ to display `Change`.
5. Press `Change`.
6. Press ∧ or ∨ to display the Group you want to change.
7. Press the Group.
8. Press `Name`.
9. Enter the new name (up to 16 characters) by pressing the buttons on the Touchscreen.
   (➤➤Basic User's Guide: *Entering Text*)
   Press `OK`.
   (For example, type NEW CLIENTS.)

Note

How to change the stored name or number:

If you want to change a character, press ◀ or ▶ to position the cursor under the character you want to change, and then press ⌫. Re-enter the character.

10. Press `OK`.
11. Press **Stop/Exit**.

Deleting a Group

1. Press SpeedDial.
2. Press Alphabetical or Numerical.
3. Press More.
4. Press ∧ or ∨ to display Delete.
5. Press Delete.
6. Press ∧ or ∨ to display the Group you want to delete.
7. Press the Group Name.
8. Press OK.
   Press Yes to confirm.
9. Press **Stop/Exit**.

Deleting a number from a Group

1. Press SpeedDial.
2. Press Alphabetical or Numerical.
3. Press More.
4. Press ∧ or ∨ to display Change.
5. Press Change.
6. Press ∧ or ∨ to display the Group you want to change.
7. Press the Group.
8. Press ∧ or ∨ to display Change.
9. Then press Change.
10. Press ∧ or ∨ to display the number you want to delete from the Group.
11. Press the check box of the number you want to delete to uncheck it.
    Press OK to confirm.
12. Press OK.
13. Press **Stop/Exit**.

6 Printing reports

Fax reports (MFC models only)

Use the buttons on the screen to set up the Transmission Verification Report and the Journal Period.

Transmission Verification Report

You can use the Transmission Verification Report as proof that you sent a fax. (➤➤Basic User's Guide: *Transmission Verification Report*)

Fax Journal (activity report)

You can set the machine to print a journal at specific intervals (every 50 faxes, 6, 12 or 24 hours, 2 or 7 days). If you set the interval to `Off`, you can still print the report by following the steps in *How to print a report* ➤➤ page 31. The factory setting is `Every 50 Faxes`.

1. Press `Menu`.
2. Press ▲ or ▼ to display `Fax`.
3. Press `Fax`.
4. Press ▲ or ▼ to display `Report Setting`.
5. Press `Report Setting`.
6. Press `Journal Period`.
7. Press ▲ or ▼ to choose an interval.
   If you choose `Every 50 Faxes`, go to step ❿.
   - 6, 12, 24 hours, 2 or 7 days

     The machine will print the report at the chosen time and then erase all jobs from its memory. If the machine's memory is filled with the maximum 200 jobs before the time you chose has passed, the machine will print the Journal early and then erase all jobs from the memory. If you want an extra report before it is due to print, you can print it without erasing the jobs from the memory.
   - Every 50 Faxes

     The machine will print the Journal when the machine has stored 50 jobs.
8. Enter the time to start printing in 24-hour format.
   Press `OK`.
   (For example: enter 19:45 for 7:45 PM.)
9. If you choose `Every 7 Days`, choose the first day for the 7-day countdown.
10. Press **Stop/Exit**.

Reports

The following reports are available:

- `XMIT Verify` (MFC models only)

  Prints a Transmission Verification Report for your last transmission.

- `Quick Dial` (MFC models only)

  Lists names and numbers stored in the Speed Dial memory, in alphabetical or numerical order.

- `Fax Journal` (MFC models only)

  Lists information about the last incoming and outgoing faxes.
  (TX: Transmit.) (RX: Receive.)

- `User Settings`

  Lists your settings.

- `Network Config`

  Lists your Network settings.

- `WLAN Report`

  Prints a WLAN connection report.

- `Caller ID hist.` (MFC models only)

  Lists the available Caller ID information about the last 30 received faxes and telephone calls.

How to print a report

1. Press `Menu`.
2. Press ▲ or ▼ to display `Print Reports`.
3. Press `Print Reports`.
4. Press the report you want.
5. (Quick Dial [1] Only) Press `Alphabetical Order` or `Numerical Order`.

   [1] MFC models only

6. Press `Start`.
7. Press **Stop/Exit**.

7 Making copies

Copy settings

You can change the copy settings temporarily for multiple copies.

(MFC models only) The machine returns to its default settings after being idle for 1 minute, or if the Mode Timer returns the machine to Fax mode. (See *Mode Timer (MFC models only)* ➤➤ page 4.)

To change a setting, press **COPY** or `Copy`, `Options` and then press ∧ or ∨ to scroll through the copy settings. When the setting you want is displayed, press it and choose your option.

When you are finished choosing settings, press **Mono Start** or **Colour Start**.

Note

You can save some of the settings that you use most often by setting them as default. These settings will remain until you change them again. (See *Setting your changes as a new default* ➤➤ page 38.)

Stop copying

To stop copying, press **Stop/Exit**.

Changing copy speed and quality

You can choose from a range of speed and quality. The factory setting is `Normal`.

- `Fast`

  Fast copy speed and lowest amount of ink used. Use to save time printing documents to be proof-read, large documents or many copies.

- `Normal`

  Normal is the recommended mode for ordinary print outs. This produces good copy quality with good copy speed.

- `Best`

  Use Best mode to copy precise images such as photographs. This provides the highest resolution and slowest speed.

1. Press (**COPY**) or `Copy`.
2. Load your document.
3. Enter the number of copies you want.
4. Press `Options`.
5. Press ∧ or ∨ to display `Quality`.
6. Press `Quality`.
7. Press ∧ or ∨ to display `Fast`, `Normal` or `Best`, and then press the option you want to set.
8. If you do not want to change additional settings, press **Mono Start** or **Colour Start**.

Enlarging or reducing the copied image

You can choose an enlargement or reduction ratio. If you choose Fit to Page, your machine will adjust the size automatically to the paper size you set.

1. Press (**COPY**) or Copy.
2. Load your document.
3. Enter the number of copies you want.
4. Press Options.
5. Press ▲ or ▼ to display Enlarge/Reduce.
6. Press Enlarge/Reduce.
7. Press ▲ or ▼ to display the available options, and then press the option you want to change.
8. Do one of the following:
   - If you chose Enlarge or Reduce, press the enlargement or reduction ratio you want.
   - If you chose Custom(25-400%), enter an enlargement or reduction ratio from 25% to 400%.

     Press OK.
   - If you chose 100% or Fit to Page, go to step ❾.

198% 10x15cm→A4
186% 10x15cm→LTR
141% A5→A4
100%
97% LTR→A4
93% A4→LTR
83% LGL→A4 (MFC-J625DW and DCP-J725DW)
83% (DCP-J525W)
69% A4→A5
47% A4→10x15cm
Fit to Page
Custom(25-400%)

9. If you do not want to change additional settings, press **Mono Start** or **Colour Start**.

Note

- Page Layout is not available with Enlarge/Reduce.
- Page Layout, Duplex Copy and Sort are not available with Fit to Page.
- Fit to Page does not work correctly when the document on the scanner glass is skewed more than 3 degrees. Using the document guidelines on the left and top, place your document in the upper left hand corner, with the document face down on the scanner glass.
- Fit to Page is not available when using the ADF.
- Fit to Page is not available for Legal sized documents.

Making N in 1 copies or a poster (Page Layout)

The N in 1 copy feature can help you save paper by letting you copy two or four pages onto one printed page.

You can also produce a poster. When you use the poster feature your machine divides your document into sections, then enlarges the sections so you can assemble them into a poster. If you want to print a poster, use the scanner glass.

IMPORTANT

- Make sure the paper size is set to A4 or Letter.
- If you are producing multiple colour copies, N in 1 copy is not available.
- `(P)` means Portrait and `(L)` means Landscape.
- Poster copy is not available when using transparencies.

Note

- `Sort` and `Enlarge/Reduce` are not available with `Page Layout`.
- `Duplex Copy` is not available with Poster copy.

1. Press (**COPY**) or `Copy`.
2. Load your document.
3. Enter the number of copies you want.
4. Press `Options`.
5. Press ▲ or ▼ to display `Page Layout`.
6. Press `Page Layout`.
7. Press ▲ or ▼ to display `Off(1in1)`, `2in1(P)`, `2in1(L)`, `4in1(P)`, `4in1(L)`, `Poster (2x1)`, `Poster (2x2)`, `Poster (3x3)` or `2in1(ID)` [1].
   Press the option you want to set.

   [1] For details about 2 in 1 (ID), see *2 in 1 ID Copy* ➤➤ page 35.

8. If you do not want to change additional settings, press **Mono Start** or **Colour Start** to scan the page.
   If you placed the document in the ADF or are making a poster, the machine scans the document and starts printing.

   If you are using the scanner glass, go to step ❾.

9. After the machine scans the page, press `Yes` to scan the next page.
10. Place the next page on the scanner glass. Press `OK` to scan the document. Repeat steps ❾ and ❿ for each page of the layout.
11. After all the pages have been scanned, press `No` to finish.

Place the document face down in the direction shown below:

■ 2in1(P)

■ 2in1(L)

■ 4in1(P)

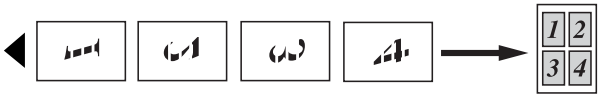

■ 4in1(L)

■ Poster (2x1)

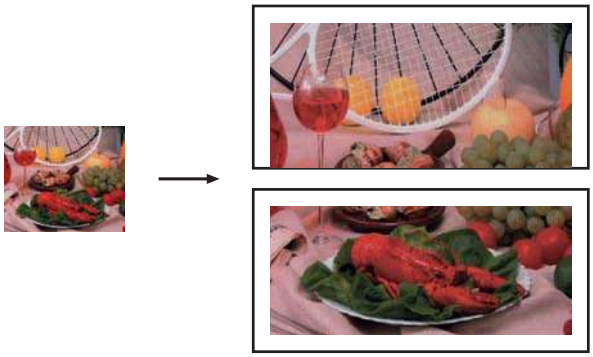

■ Poster (2x2)

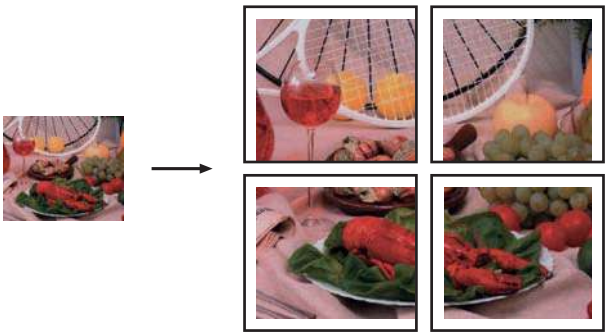

■ Poster (3x3)

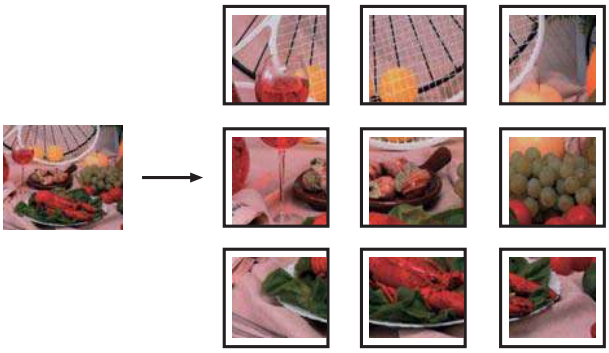

2 in 1 ID Copy

You can copy both sides of your identification card onto one page, keeping the original card size. Make sure the paper size is set to A4 or Letter.

Note

You can copy an identification card to the extent permitted under applicable laws. (➤➤Product Safety Guide: *Unlawful use of copying equipment*)

1. Press (**COPY**) or Copy.
2. Place your identification card face down at the left corner of the scanner glass.

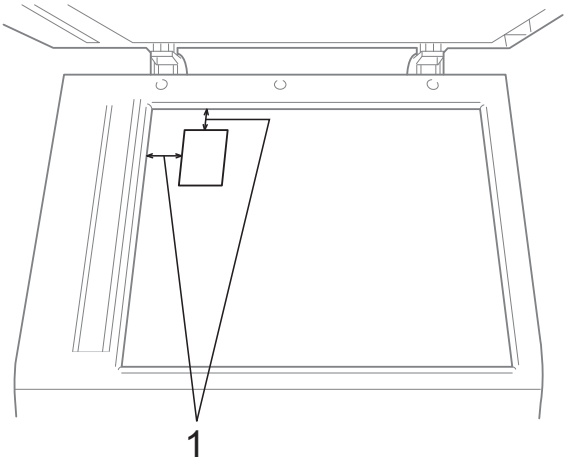

1 3 mm or greater (top, left)

3. Enter the number of copies you want.

4 Press Options.

5 Press ▲ or ▼ to display Page Layout.

6 Press Page Layout.

7 Press ▲ or ▼ to display 2in1(ID).

8 Press 2in1(ID).

9 Press **Mono Start** or **Colour Start**. The machine starts scanning the first page.

10 After the machine has scanned one side, press Yes. Turn over the identification card and press OK to scan the other side.

Note

- Sort, Duplex Copy and Enlarge/Reduce are not available with 2in1(ID).
- If you are producing multiple colour copies, 2 in 1 (ID) copy is not available.

Sorting copies using the ADF (MFC-J625DW and DCP-J725DW only)

You can sort multiple copies. Pages will be stacked in the order 321, 321, 321, and so on.

1 Press (**COPY**) or Copy.

2 Load your document.

3 Enter the number of copies you want.

4 Press Options.

5 Press ▲ or ▼ to display Stack/Sort.

6 Press Stack/Sort.

7 Press Sort.

8 If you do not want to change additional settings, press **Mono Start** or **Colour Start**.

Note

Fit to Page and Page Layout are not available with Sort.

Adjusting Density

You can adjust the copy density to make copies darker or lighter.

1 Press (**COPY**) or Copy.

2 Load your document.

3 Enter the number of copies you want.

4 Press Options.

5 Press ▲ or ▼ to display Density.

6 Press Density.

7 Press ◀ or ▶ to make a lighter or darker copy.
Press OK.

8 If you do not want to change additional settings, press **Mono Start** or **Colour Start**.

Duplex (2-sided) copying (MFC-J625DW and DCP-J725DW only)

You can reduce the amount of paper used for copies by copying on both sides of the paper.

We recommend you load your document in the ADF for duplex copying. For 2-sided documents and books use the scanner glass.

(long edge flip)

Portrait

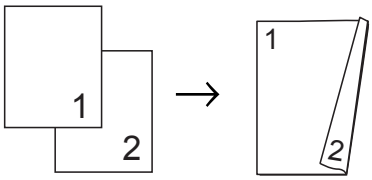

Landscape

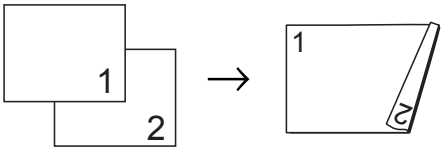

(short edge flip)

Portrait

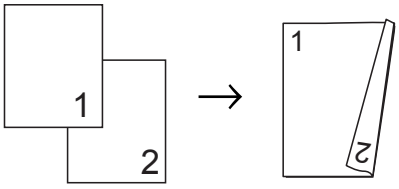

Landscape

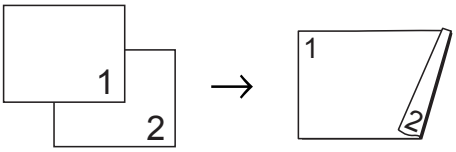

Note

- `2in1(ID)`, `Poster` and `Fit to Page` are not available with `Duplex Copy`.
- You can only use plain paper sizes A4, A5 or Letter.

1. Press (**COPY**) or `Copy`.
2. Enter the number of copies you want.
3. Press `Options`.
4. If you want to sort multiple copies, press ▲ or ▼ to display `Stack/Sort`.
5. Press `Stack/Sort`.
6. Press `Sort`.
7. Press ▲ or ▼ to display `Duplex Copy`.
8. Press `Duplex Copy`.
9. Press ▲ or ▼ to display the duplex copy type you want, and press `Portrait LongEdgeFlip`, `Landscape LongEdgeFlip`, `Portrait ShortEdgeFlip` or `Landscape ShortEdgeFlip`.
10. Press `OK` after reading the message on the screen.
11. Load your document.
12. Press **Mono Start** or **Colour Start**.
    If you placed the document in the ADF, the machine scans the pages and starts printing.

    If you are using the scanner glass, go to step ⓭.

13 The screen shows:

```
Set the next page, then press
Scan. When you finish,  press
Complete.
```

Place the next page on the scanner glass and press `Scan`.
Press `OK`.
The machine starts printing.

14 If you pressed `Sort` for multiple copies, repeat step 13 for each additional page. After all the pages have been scanned, press `Complete`.

DO NOT touch printed pages until they are ejected the second time. The machine will print and eject the first side, and then pull the paper back in to print the second side.

Note

If your document causes paper jams, try using one of the special duplex copy settings. Press `Advanced` after step 8. Press ▲ or ▼ to choose `Duplex1` or `Duplex2`.
`Duplex1` helps avoid paper jams when copying by allowing more time for the ink to dry. Choosing `Duplex2` allows more time for the ink to dry while also using less ink.

Setting your changes as a new default

You can save the settings for the copy options you use most often by setting them as default, such as `Quality`, `Enlarge/Reduce`, `Density`, `Page Layout` and `Duplex Copy` (MFC-J625DW and DCP-J725DW only). These settings will remain until you change them again.

1 Press (**COPY**) or `Copy`.

2 Press `Options`.

3 Press ▲ or ▼ to display the settings, and press on the setting you want to change. Then press the new option. Repeat this step for each setting you want to change.

4 After changing the last setting, press ▲ or ▼ to display `Set New Default`.

5 Press `Set New Default`.

6 Press `OK`.
The LCD asks you again to confirm if you want to set the change as the new default.
Press `Yes`.

7 Press **Stop/Exit**.

Restoring all settings to the factory default

You can restore the copy settings `Quality`, `Enlarge/Reduce`, `Density`, `Page Layout` and `Duplex Copy` (MFC-J625DW and DCP-J725DW only) that you have changed to the factory default.

1 Press (**COPY**) or `Copy`.

2 Press `Options`.

3 Press ▲ or ▼ to display `Factory Reset`.

4 Press `Factory Reset`.

5 Press `Yes`.

6 Press **Stop/Exit**.

8 Printing photos from a memory card or USB Flash memory drive (MFC-J625DW and DCP-J725DW only)

PhotoCapture Center™ operations

Memory cards, USB Flash memory drive and folder structures

Your machine is designed to be compatible with modern digital camera image files, memory cards and USB Flash memory drives; however, please read the points below to avoid errors:

- The image file extension must be .JPG (other image file extensions like .JPEG, .TIF, .GIF and so on will not be recognized).
- Direct PhotoCapture Center™ printing must be performed separately from PhotoCapture Center™ operations using the PC. (Simultaneous operation is not available.)
- The machine can read up to 999 files [1] on a memory card or USB Flash memory drive.

  [1] The folder inside memory cards or USB Flash memory drive is also counted.
- The DPOF file on the memory cards must be in a valid DPOF format. (See *DPOF printing* ➤➤ page 41.)

Please be aware of the following:

- When printing an index or image, the PhotoCapture Center™ will print all the valid images, even if one or more images have been corrupted. Corrupted images will not be printed.
- (memory card users)

  Your machine is designed to read memory cards that have been formatted by a digital camera.

  When a digital camera formats a memory card it creates a special folder into which it copies image data. If you need to modify the image data stored on a memory card with your PC, we recommend that you do not modify the folder structure created by the digital camera. When saving new or modified image files to the memory card, we also recommend you use the same folder your digital camera uses. If the data is not saved to the same folder, the machine may not be able to read the file or print the image.
- (USB Flash memory drive users)

  This machine supports USB Flash memory drives that have been formatted by Windows®.

Print Images

Print Index (Thumbnails)

The PhotoCapture Center™ assigns numbers for images (such as No.1, No.2, No.3, and so on).

The PhotoCapture Center™ uses these numbers to identify each picture. You can print a thumbnail page to show all the pictures on the memory card or USB Flash memory drive.

Note

Only file names that are 20 characters or less will be printed correctly on the index sheet.

1. Make sure you have put the memory card or USB Flash memory drive in the correct slot.

   Press (**PHOTO**) or `Photo`.

2. Press ▲ or ▼ to display `Index Print`.
3. Press `Index Print`.
4. Press `Index Sheet` and choose `6 IMGs/Line` or `5 IMGs/Line`.

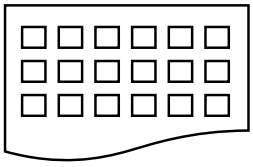

`6 IMGs/Line`

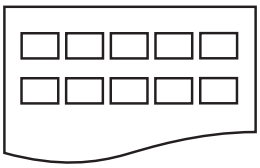

`5 IMGs/Line`

Print time for `5 IMGs/Line` will be slower than `6 IMGs/Line`, but the quality is better.

5. Do one of the following:
   - Press `Options` to change the paper type or the paper size you are using.
   - If you do not want to change the paper settings, go to ❽.
6. Press `Paper Type`.
   Press ▲ or ▼ to display the paper type you are using, and choose `Plain Paper`, `Inkjet Paper`, `Brother BP71`, `Brother BP61` or `Other Glossy`.
7. Press `Paper Size`.
   Press `A4` or `Letter`.
8. Press **Colour Start** to print.

Printing Photos

Before you can print an individual image, you have to know the image number.

1. Make sure you have put the memory card or USB Flash memory drive in the correct slot.

   Press (**PHOTO**) or `Photo`.

2. Print the Index. (See *Print Index (Thumbnails)* ➤➤ page 40.)
3. Press ▲ or ▼ to display `Index Print`.
4. Press `Index Print`.
5. Press `Print Photos`.
6. Enter the image number that you want to print from the thumbnails printed on the Index page.
   After you have chosen the image numbers, press `OK`.

7 Press OK.

Note

- You can enter the numbers at one time by using a comma or a hyphen. For example, Enter 1,3,6 to print images No.1, No.3 and No.6. Enter 1-5 to print images No.1 to No.5.
- You can enter up to 12 characters (including commas) for the image numbers you want to print.

8 Do one of the following:

- Press Options to change the print settings. (See page 42.)
- If you do not want to change any settings, press Start to print.

Printing All Photos

You can print all the photos on your memory card or USB Flash memory drive.

1 Make sure you have put the memory card or USB Flash memory drive in the correct slot.

Press (**PHOTO**) or Photo.

2 Press ▲ or ▼ to display Print All.

3 Press Print All.

4 Do one of the following:

- Press Options to change the print settings. (See page 42.)
- If you do not want to change any settings, press Start to print.

DPOF printing

DPOF stands for Digital Print Order Format.

Major digital camera manufacturers (Canon Inc., Eastman Kodak Company, FUJIFILM Corporation, Panasonic Corporation and Sony Corporation) created this standard to make it easier to print images from a digital camera.

If your digital camera supports DPOF printing, you will be able to choose on the digital camera display the images and number of copies you want to print.

When a memory card containing DPOF information is put into your machine, you can print the chosen image easily.

1 Make sure you have put the memory card in the correct slot.

Press (**PHOTO**) or Photo.

The machine will ask you if you want to use DPOF settings.
The DPOF file on the memory card must be in a valid DPOF format.

2 Press Yes.

3 Do one of the following:

- Press Options to change the print settings. (See page 42.)
- If you do not want to change any settings, press Start to print.

Note

A DPOF File error can occur if the print order that was created on the camera has been corrupted. Delete and recreate the print order using your camera to correct this problem. For instructions on how to delete or recreate the print order, refer to your camera manufacturer's support website or accompanying documentation.

PhotoCapture Center™ print settings

You can change the print settings temporarily for the next print job.

(MFC models only) The machine returns to its default settings after being idle for 3 minutes, or if the Mode Timer returns the machine to Fax mode. (See *Mode Timer (MFC models only)* ➤➤ page 4.)

Note

You can save the print settings you use most often by setting them as the default. (See *Setting your changes as a new default* ➤➤ page 46.)

Print Quality

1. Press (**PHOTO**) or `Photo`.
   Do one of the following:
   - Press `View Photos` and press ∧ or ∨ to display each photo. When the photo you want to print is displayed, press `OK`.
   - Press `Print All`.
2. Press `Options`.
3. Press ∧ or ∨ to display `Print Quality`.
4. Press `Print Quality`.
5. Press `Normal` or `Photo`.
6. If you do not want to change additional settings, press .
   Press `Start` to print.

Paper options

Paper Type

1. Press (**PHOTO**) or `Photo`.
   Do one of the following:
   - Press `View Photos` and press ∧ or ∨ to display each photo. When the photo you want to print is displayed, press `OK`.
   - Press `Print All`.
2. Press `Options`.
3. Press ∧ or ∨ to display `Paper Type`.
4. Press `Paper Type`.
5. Press ∧ or ∨ to display `Plain Paper`, `Inkjet Paper`, `Brother BP71`, `Brother BP61` or `Other Glossy`.
   Press the option you want to set.
6. If you do not want to change additional settings, press .
   Press `Start` to print.

Paper and print size

1. Press (**PHOTO**) or `Photo`.
   Do one of the following:
   - Press `View Photos` and press ∧ or ∨ to display each photo. When the photo you want to print is displayed, press `OK`.
   - Press `Print All`.
2. Press `Options`.
3. Press ∧ or ∨ to display `Paper Size`.

4 Press Paper Size.

5 Press ▲ or ▼ to display 10x15cm, 13x18cm, A4 or Letter.
Press the option you want to set.
Do one of the following:

- If you chose Letter or A4, go to step ❻.
- If you chose another size of paper, go to step ❼.

6 Press the Print Size.

Example: Printed position for A4 paper		
1 8x10cm	2 9x13cm	3 10x15cm
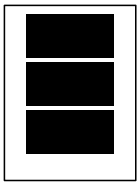	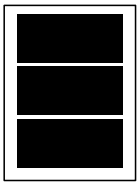	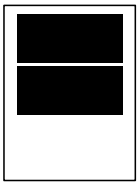
4 13x18cm	5 15x20cm	6 Max. Size
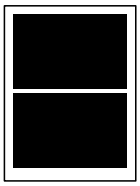	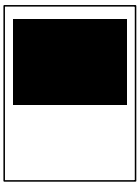	

7 If you do not want to change additional settings, press ⮌.
Press Start to print.

Adjusting Brightness, Contrast and Colour

Brightness

1 Press (**PHOTO**) or Photo.
Do one of the following:

- Press View Photos and press ▲ or ▼ to display each photo. When the photo you want to print is displayed, press OK.
- Press Print All.

2 Press Options.

3 Press ▲ or ▼ to display Brightness.

4 Press Brightness.

5 Press ◀ or ▶ to make a darker or lighter print.
Press OK.

6 If you do not want to change additional settings, press ⮌.
Press Start to print.

Contrast

You can choose the contrast setting. Increasing the contrast will make an image look sharper and more vivid.

1 Press (**PHOTO**) or Photo.
Do one of the following:

- Press View Photos and press ▲ or ▼ to display each photo. When the photo you want to print is displayed, press OK.
- Press Print All.

2 Press Options.

3 Press ▲ or ▼ to display Contrast.

4 Press Contrast.

5 Press ◀ or ▶ to change the contrast.
Press OK.

6 If you do not want to change additional settings, press ⮌.
Press Start to print.

Colour Enhancement

You can turn on the colour enhancement feature to print more vivid images. Printing time will be slower with this feature and also, depending on the image you are printing, it may use more ink.

1 Press (**PHOTO**) or Photo.
Do one of the following:
- Press View Photos and press ▲ or ▼ to display each photo. When the photo you want to print is displayed, press OK.
- Press Print All.

2 Press Options.

3 Press ▲ or ▼ to display Color Enhance.

4 Press Color Enhance.

5 Do one of the following:
- If you want to customize the White Balance, Sharpness or Color Density, press Color Enhance and then press On.
  Go to step ❻.
- If you do not want to customize, press Color Enhance and then press Off.
  Press ⮌.
  Go to step ❾.

6 Press ▲ or ▼ to display White Balance, Sharpness or Color Density, and then press the option you want to change.

7 Press ◀ or ▶ to adjust the degree of the setting.
Press OK.

8 Do one of the following:
- If you want to customize another colour enhancement, repeat steps ❻ to ❼.
  Press ⮌.
- If you want to change other settings, press ⮌ to display the print setting menu and press the setting you want to change. (See page 42.)

9 If you do not want to change additional settings, press ⮌.
Press Start to print.

Note

- **White Balance**

  This setting adjusts the hue of the white areas of an image. Lighting, camera settings and other influences will affect the appearance of white. The white areas of a picture may be slightly pink, yellow or some other colour. By using this setting, you can correct that effect and bring the white areas back to pure white.

- **Sharpness**

  This setting enhances the detail of an image, similar to adjusting the fine focus on a camera. If the image is not in true focus and you cannot see the fine details of the picture, then adjust the sharpness.

- **Colour Density**

  This setting adjusts the total amount of colour in the image. You can increase or decrease the amount of colour in an image to improve a washed out or weak picture.

Cropping

If your photo is too long or wide to fit the available space on your chosen layout, part of the image will automatically be cropped.

The default setting is On. If you want to print the whole image, turn this setting to Off. When you set Cropping to Off, also set Borderless to Off. (See *Borderless printing* ➤➤ page 45.)

1. Press (**PHOTO**) or Photo.
   Do one of the following:
   - Press View Photos and press ▲ or ▼ to display each photo. When the photo you want to print is displayed, press OK.
   - Press Print All.
2. Press Options.
3. Press ▲ or ▼ to display Cropping.
4. Press Cropping.
5. Press Off (or On).
6. If you do not want to change additional settings, press .
   Press Start to print.

Cropping: On

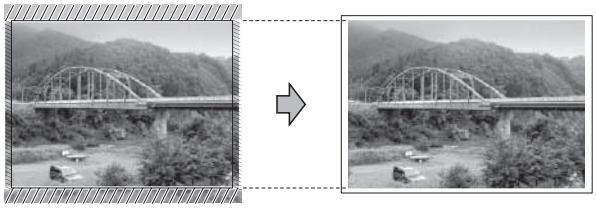

Cropping: Off

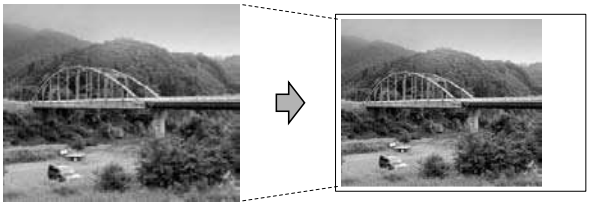

Borderless printing

This feature expands the printable area to the edges of the paper. Printing time will be slightly slower.

1. Press (**PHOTO**) or Photo.
   Do one of the following:
   - Press View Photos and press ▲ or ▼ to display each photo. When the photo you want to print is displayed, press OK.
   - Press Print All.
2. Press Options.
3. Press ▲ or ▼ to display Borderless.
4. Press Borderless.
5. Press Off (or On).
6. If you do not want to change additional settings, press .
   Press Start to print.

Date Print

You can print the date if it is already in the data on your photo. The date will be printed on the lower right corner. If the data doesn't have the date information, you cannot use this function.

1. Press (**PHOTO**) or Photo.
   Do one of the following:
   - Press View Photos and press ▲ or ▼ to display each photo. When the photo you want to print is displayed, press OK.
   - Press Print All.
2. Press Options.
3. Press ▲ or ▼ to display Date Print.
4. Press Date Print.
5. Press On (or Off).

6 If you do not want to change additional settings, press ⮌.
Press Start to print.

Note

The DPOF setting on your camera must be turned off to use the Date Print feature.

Setting your changes as a new default

You can save the print settings you use most often by setting them as the default settings. These settings will remain until you change them again.

1 Press your new setting.
Repeat this step for each setting you want to change.

2 After changing the last setting, press ∧ or ∨ to choose Set New Default.

3 Press Set New Default.

4 Press OK.
The LCD asks you again to confirm if you set the change as the new default.
Press Yes.

5 Press **Stop/Exit**.

Restoring all settings to the factory default

You can restore the PhotoCapture settings you have changed back to the factory default for, Print Quality, Paper Type, Paper Size, Brightness, Contrast, Color Enhance, Cropping, Borderless and Date Print.

1 Press (**PHOTO**) or Photo.
Do one of the following:

- Press View Photos and press ∧ or ∨ to display each photo. When the photo you want to print is displayed, press OK.
- Press Print All.

2 Press Options.

3 Press ∧ or ∨ to display Factory Reset.

4 Press Factory Reset.

5 Press Yes to confirm.

6 Press **Stop/Exit**.

Scan to a memory card or USB Flash memory drive

How to set a new default

You can save the Scan to Media settings (`Quality` and `File Type`) you use most often by setting them as the default settings. These settings will remain until you change them again.

1. Press (**SCAN**) or `Scan`.
2. Press ▲ or ▼ to display `Scan to Media`.
3. Press `Scan to Media`.
4. Press `Options`.
5. Press `Quality` or `File Type`. Then press the option you want to change. Repeat this step for each setting you want to change.
6. After you are finished choosing your preferred settings, press `Set New Default`.
7. Press `OK`.
   The LCD asks you again to confirm if you want to set the change as the new default.
   Press `Yes`.
8. Press **Stop/Exit**.

How to reset to the factory default

You can restore all the Scan to Media settings (`Quality` and `File Type`), that you have changed, back to the factory default.

1. Press (**SCAN**) or `Scan`.
2. Press ▲ or ▼ to display `Scan to Media`.
3. Press `Scan to Media`.
4. Press `Options`.
5. Press ▲ or ▼ to display `Factory Reset`.
6. Press `Factory Reset`.
7. Press `Yes` to confirm.
8. Press **Stop/Exit**.

9 Printing photos from a camera (MFC-J625DW and DCP-J725DW only)

Printing photos directly from a PictBridge camera

Your Brother machine supports the PictBridge standard, allowing you to connect to and print photos directly from any PictBridge compatible digital camera.

If your camera is using the USB Mass Storage standard, you can also print photos from a digital camera without PictBridge. (See *Printing photos directly from a digital camera (without PictBridge)* ➤➤ page 50.)

PictBridge requirements

To avoid errors, remember the following points:

- The machine and the digital camera must be connected using a suitable USB cable.
- The image file extension must be .JPG (other image file extensions like .JPEG, .TIF, .GIF and so on will not be recognized).
- PhotoCapture Center™ operations are not available when using the PictBridge feature.

Setting your digital camera

Make sure your camera is in PictBridge mode. The following PictBridge settings may be available from the LCD of your PictBridge compatible camera.

Depending on your camera some of these settings may not be available.

Camera Menu Selections	Options
Paper Size	A4, Letter, 10 × 15 cm, Printer Settings (Default setting) [2]
Paper Type	Plain Paper, Glossy Paper, Inkjet Paper, Printer Settings (Default setting) [2]
Layout	Borderless: On, Borderless: Off, Printer Settings (Default setting) [2]
DPOF setting [1]	-
Print Quality	Normal, Fine, Printer Settings (Default setting) [2]
Colour Enhancement	On, Off, Printer Settings (Default setting) [2]
Date Print	On, Off, Printer Settings (Default setting) [2]

1 See *DPOF printing* ➤➤ page 50 for more details.

2 If your camera is set to use the Printer Settings (Default setting), the machine will print your photo using the following settings.

Settings	Options
Paper Size	10 × 15 cm
Paper Type	Other Glossy
Layout	Borderless: On
Print Quality	Photo
Colour Enhancement	Off
Date Print	Off

- When your camera does not have any menu selections, these settings are also used.
- The name and availability of each setting depends on the specification of your camera.

Please refer to the documentation supplied with your camera for more detailed information on changing PictBridge settings.

Printing Images

Note

Remove any memory cards or USB Flash memory drive from the machine before connecting a digital camera.

1. Make sure that your camera is turned off. Connect your camera to the USB direct interface (1) on the machine using the USB cable.

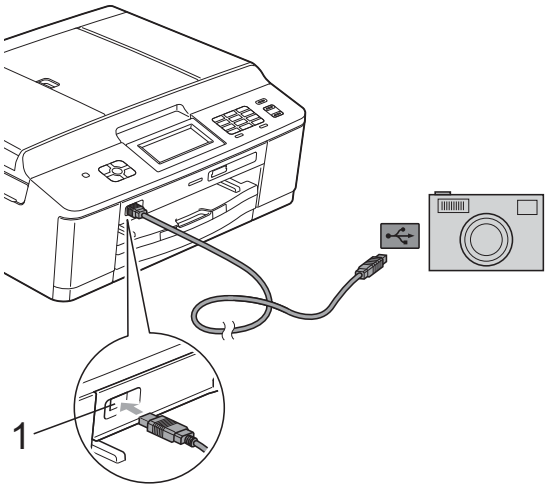

1 USB direct interface

2. Turn on the camera.
   When the machine has recognized the camera, the LCD shows `Camera Connected`.

3. Choose the photo you want to print following the instructions from your camera.
   When the machine starts printing a photo, the LCD will show `Printing`.

IMPORTANT

To prevent damage to your machine, do not connect any device other than a digital camera or USB Flash memory drive to the USB direct interface.

DPOF printing

DPOF stands for Digital Print Order Format.

Major digital camera manufacturers (Canon Inc., Eastman Kodak Company, FUJIFILM Corporation, Panasonic Corporation and Sony Corporation) created this standard to make it easier to print images from a digital camera.

If your digital camera supports DPOF printing, you will be able to choose on the digital camera display the images and number of copies you want to print.

Note

A DPOF File error can occur if the print order that was created on the camera has been corrupted. Delete and recreate the print order using your camera to correct this problem. For instructions on how to delete or recreate the print order, refer to your camera manufacturer's support website or accompanying documentation.

Printing photos directly from a digital camera (without PictBridge)

If your camera supports the USB Mass Storage standard, you can connect your camera in storage mode. This enables you to print photos from your camera.

(If you would like to print photos in PictBridge mode, see *Printing photos directly from a PictBridge camera* ➤➤ page 48.)

Note

The name, availability and operation differ among digital cameras. Please refer to the documentation supplied with your camera for detailed information, such as how to switch from PictBridge mode to USB mass storage mode.

Printing Images

Note

Remove any memory cards or USB Flash memory drive from the machine before connecting a digital camera.

1. Make sure that your camera is turned off. Connect your camera to the USB direct interface (1) on the machine using the USB cable.

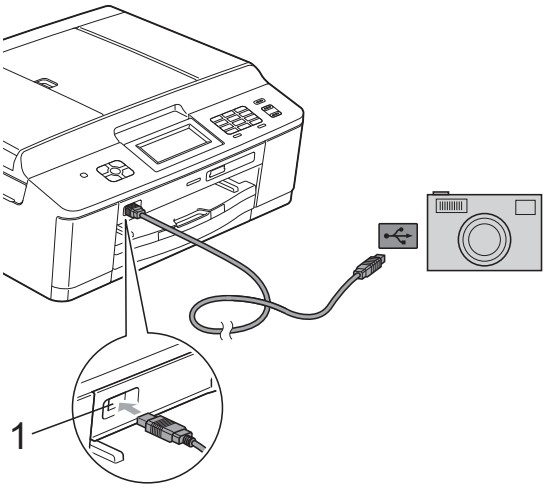

1 USB direct interface

2. Turn on the camera.
3. Follow the steps in *Print Images* ➤➤ page 40.

IMPORTANT

To prevent damage to your machine, do not connect any device other than a digital camera or USB Flash memory drive to the USB direct interface.

A Routine maintenance

Cleaning and checking the machine

Cleaning the outside of the machine

Clean the Touchscreen as follows:

IMPORTANT

- Turn off the power switch when you clean the Touchscreen.
- DO NOT use any type of liquid cleaners (including ethanol).

1. Clean the Touchscreen with a *dry*, soft lint-free cloth.

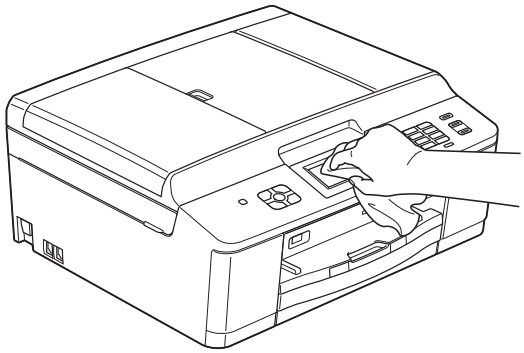

Clean the outside of the machine as follows:

IMPORTANT

- Use neutral detergents. Cleaning with volatile liquids such as thinner or benzine will damage the outside surface of the machine.
- DO NOT use cleaning materials that contain ammonia.
- DO NOT use isopropyl alcohol to remove dirt from the control panel. It may crack the panel.

1. Pull the paper tray (1) completely out of the machine.

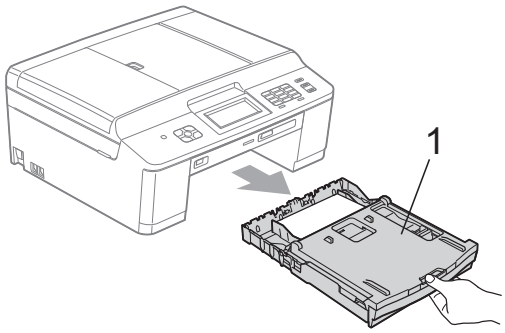

2. Wipe the outside of the machine with a *dry*, soft lint-free cloth to remove dust.

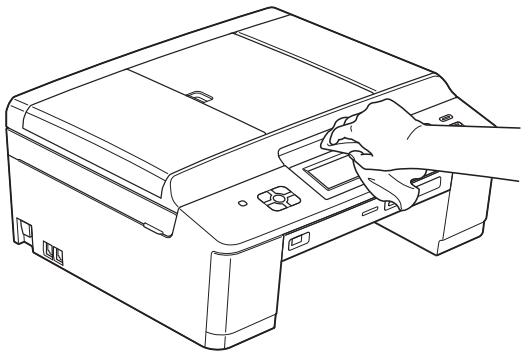

3. Lift the output paper tray cover and remove anything that is stuck inside the paper tray.

4 Wipe the paper tray with a *dry*, soft lint-free cloth to remove dust.

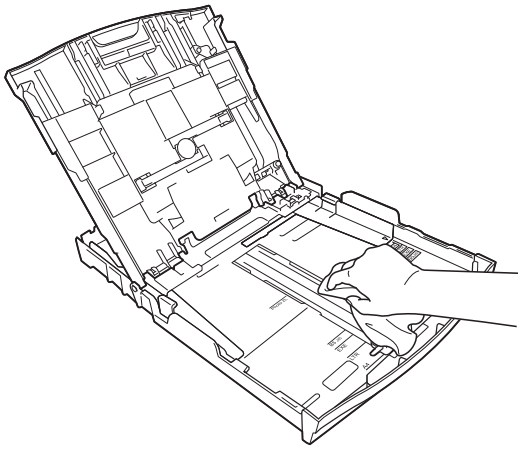

5 Close the output paper tray cover and put the paper tray firmly back in the machine.

Cleaning the machine's printer platen

WARNING

Be sure to unplug the machine from the electrical socket before cleaning the printer platen to avoid an electrical shock.

1 Using both hands, grasp the plastic tabs on both side of the machine to lift the scanner cover into the open position.

2 Clean the machine's printer platen (1) and the area around it, wiping off any scattered ink with a soft, *dry* lint-free cloth.

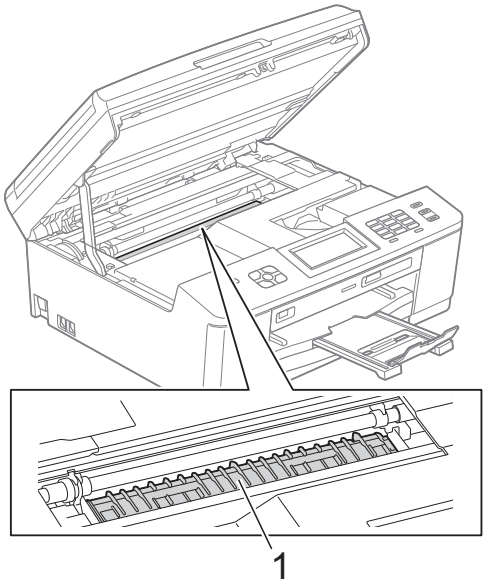

3 Using both hands, grasp the plastic tabs on both sides of the machine and gently close the scanner cover.

4 Re-connect the power cord.

A

Cleaning the paper feed rollers

If the paper feed rollers are stained with ink, it may cause paper feed problems.

1. Unplug the machine from the electrical socket. Pull the paper tray (1) completely out of the machine.

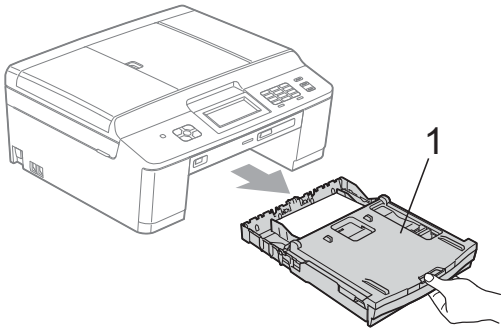

Note

If the paper support flap is open, close it, and then close the paper support.

2. Clean the front side of the Paper Feed Rollers (1) with a soft lint-free cloth slightly moistened with water, using a side-to-side motion.
After cleaning, wipe the rollers with a *dry*, soft lint-free cloth to remove all moisture.

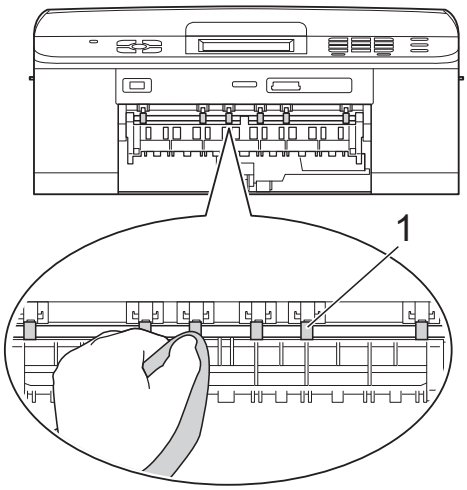

3. Lift the Jam Clear Flap (2), and then clean the back side of the Paper Feed Rollers (1) with a soft lint-free cloth slightly moistened with water.
After cleaning, wipe the rollers with a *dry*, soft lint-free cloth to remove all moisture.

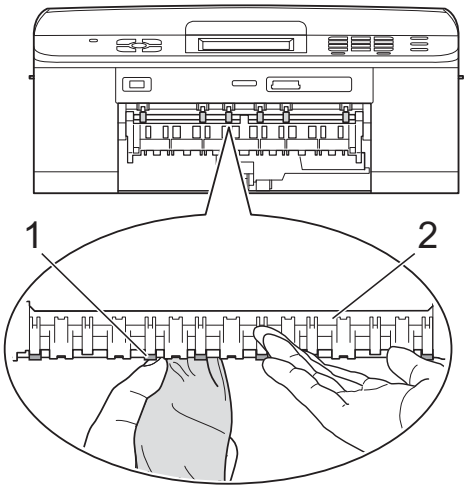

4. Put the paper tray firmly back in the machine.

5. Re-connect the power cord.

Note

Do not use the machine again until the rollers are dry completely. Using the machine before the rollers are dry may cause paper feed problems.

Cleaning the paper pick-up rollers

1. Unplug the machine from the electrical socket.
2. Pull the paper tray completely out of the machine.

Note

If the machine starts to multi-feed the last few sheets of paper in the tray, clean the Base Pad (1) with a soft lint-free cloth slightly moistened with water.

After cleaning, wipe the pad with a *dry*, soft lint-free cloth to remove all moisture.

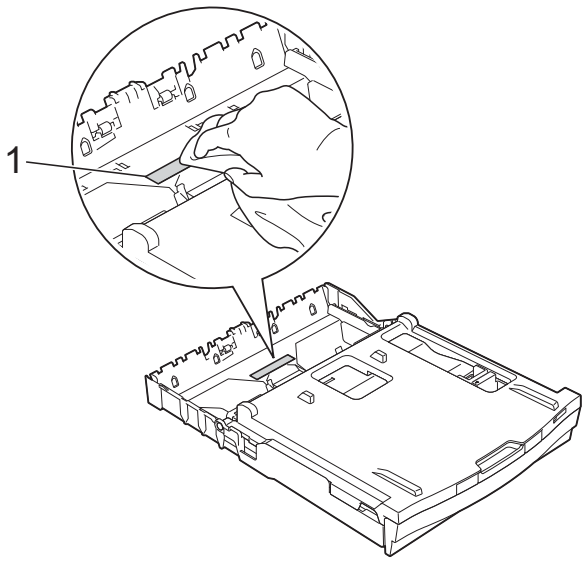

3. Open the Jam Clear Cover (1) at the back of the machine.

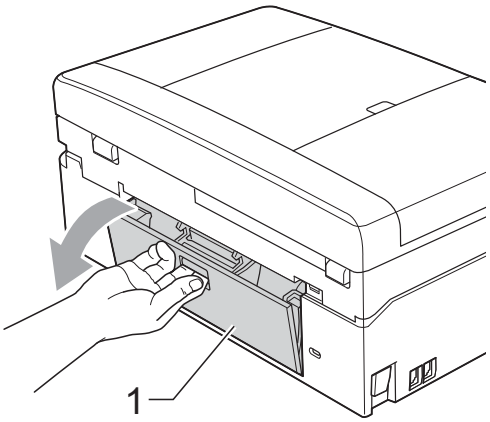

4. Clean the Paper Pick-up Rollers (1) with a soft lint-free cloth moistened with water.
   Slowly turn the rollers so that the whole surface is cleaned.
   After cleaning, wipe the rollers with a *dry*, soft lint-free cloth to remove all moisture.

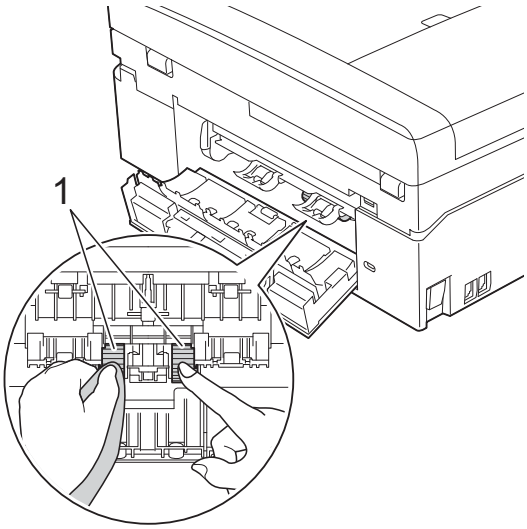

5. Close the Jam Clear Cover.
   Make sure the cover is closed completely.
6. Put the paper tray firmly back in the machine.
7. Re-connect the power cord.

A

Checking the ink volume

Although an ink volume icon appears on the LCD, you can use the ink menu to see a large graph showing the ink that is left in each cartridge.

1. Press `Ink` or .
2. Press ▲ or ▼ to display `Ink Volume`.
3. Press `Ink Volume`.
   The LCD shows the ink volume.
4. Press **Stop/Exit**.

Note

You can check the ink volume from your computer.
➤➤Software User's Guide: *Printing* (Windows®)
➤➤Software User's Guide: *Printing and Faxing* (Macintosh)

Packing and shipping the machine

When you transport the machine, use the packing materials that came with your machine. Follow the instructions below to correctly package your machine. Damage caused to your machine during transit may not be covered by your warranty.

IMPORTANT

It is important to allow the machine to "park" the print head after a print job. Listen carefully to the machine before unplugging it to make sure that all mechanical noise has stopped. Not allowing the machine to finish this process may lead to print problems and possible damage to the print head.

1. Open the ink cartridge cover.
2. Remove all four ink cartridges. Press the ink release lever above each cartridge to release it.
   (➤➤Basic User's Guide: *Replacing the ink cartridges*)
3. Install the orange protective part and then close the ink cartridge cover.

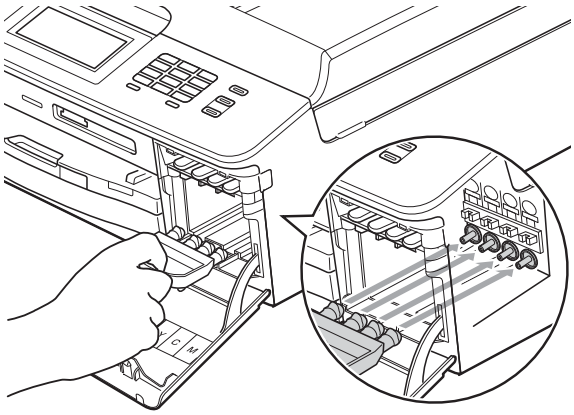

IMPORTANT

- Make sure the plastic tab on the right side of the orange protective part (1) clicks securely into place (2).

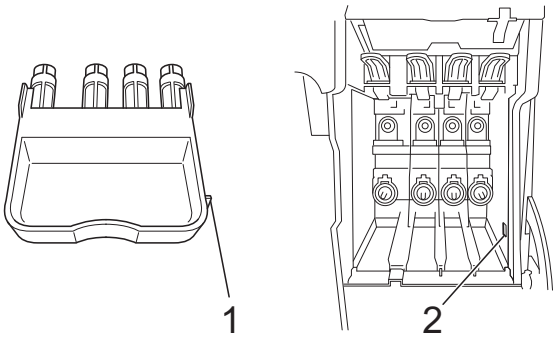

- If you are not able to find the orange protective part, ship the machine without it. DO NOT install the ink cartridges as an alternative before shipping.

4 Lift the machine from the front and hook the tab of the orange protective part into the keyed opening (1) on the bottom of the paper tray. Then latch the protective part over the raised portion of the paper tray (2).

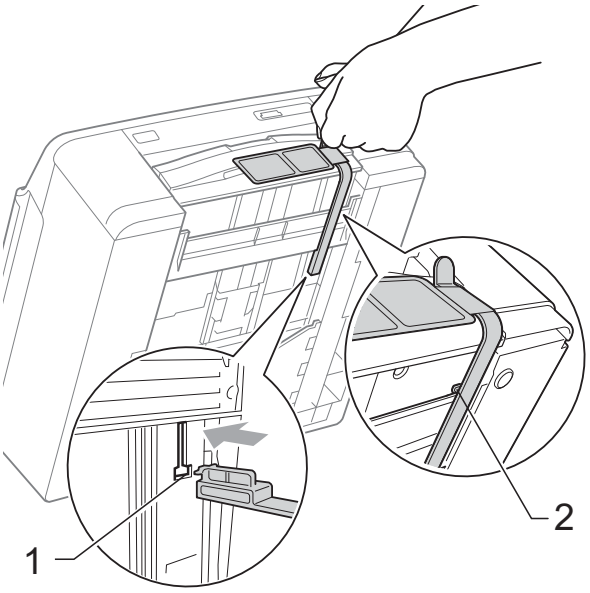

5 Unplug the machine from the telephone wall socket and take the telephone line cord out of the machine.

6 Unplug the machine from the electrical socket.

7 Using both hands, use the plastic tabs on both sides of the machine to lift the scanner cover into the open position. Then unplug the interface cable from the machine, if it is connected.

8 Using both hands, grasp the plastic tabs on both sides of the machine and gently close the scanner cover.

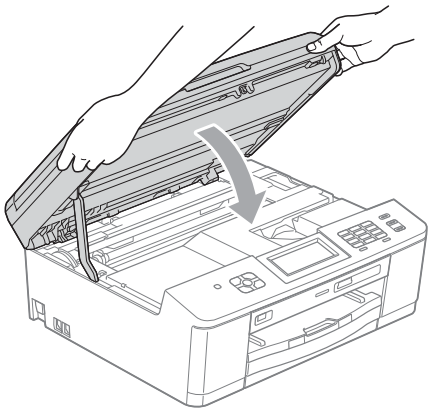

A

9 Wrap the ink cartridges in the bag, then tape the bag on to the paper tray.

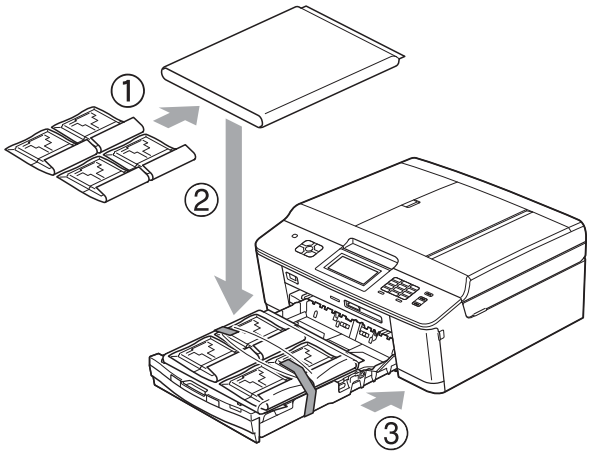

10 Wrap the machine in the bag.

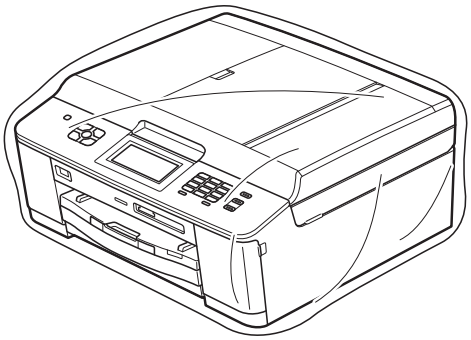

11 Pack the machine and the printed materials in the original carton with the original packing material as shown below.

Note

If you are returning your machine to Brother as part of the Exchange Service, pack *only* the machine. Keep all separate parts and printed materials to use with your “Exchange” machine.

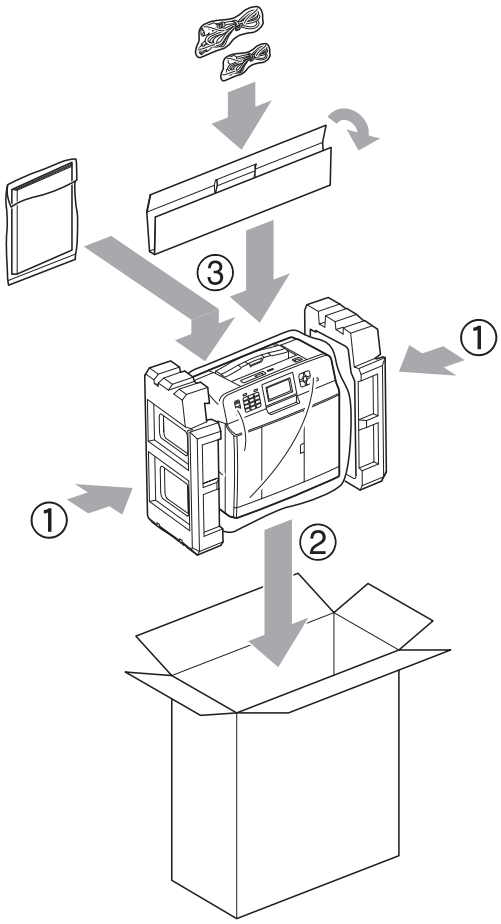

12 Close the carton and tape it shut.

B Glossary

This is a comprehensive list of features and terms that appear in Brother manuals. Availability of these features depends on the model you purchased.

ADF (automatic document feeder)

The document can be placed in the ADF and scanned one page at a time automatically.

Auto Reduction

Reduces the size of incoming faxes.

Automatic fax transmission

Sending a fax without picking up the handset of an external telephone.

Automatic Redial

A feature that enables your machine to redial the last fax number after five minutes if the fax did not go through because the line was busy.

Backup Print

Your machine prints a copy of every fax that is received and stored in its memory. This is a safety feature so you will not lose messages during a power failure.

Batch Transmission

(Black and white faxes only) As a cost saving feature, all delayed faxes to the same fax number can be sent as one transmission.

Beeper Volume

Volume setting for the beep when you press a key or make an error.

Brightness

Changing the Brightness makes the whole image lighter or darker.

Broadcasting

The ability to send the same fax message to more than one location.

Caller ID

A service purchased from the telephone company that lets you see the number (or name) of the party calling you.

CNG tones

The special tones (beeps) sent by fax machines during automatic transmission to tell the receiving machine that a fax machine is calling.

Coding method

Method of coding the information contained in the document. All fax machines must use a minimum standard of Modified Huffman (MH). Your machine is capable of greater compression methods, Modified Read (MR), Modified Modified Read (MMR) and JPEG, if the receiving machine has the same capability.

Colour Enhancement

Adjusts the colour in the image for better print quality by improving sharpness, white balance and colour density.

Communication error (Comm. Error)

An error during fax sending or receiving, usually caused by line noise or static.

Compatibility group

The ability of one fax unit to communicate with another. Compatibility is assured between ITU-T Groups.

Contrast

Setting to compensate for dark or light documents, by making faxes or copies of dark documents lighter and light documents darker.

Delayed Fax

Sends your fax at a specified time later.

Density

Changing the Density makes the whole image lighter or darker.

Dual Access

Your machine can scan outgoing faxes or scheduled jobs into memory at the same time it is sending a fax from memory or receiving or printing an incoming fax.

ECM (Error Correction Mode)

Detects errors during fax transmission and resends the pages of the fax that had an error.

Extension telephone

A telephone using the same line as your fax but plugged into a separate wall socket.

External telephone

A TAD (telephone answering device) or telephone that is connected to your machine.

F/T Ring Time

The length of time that the Brother machine rings (when the Receive Mode setting is Fax/Tel) to notify you to pick up a voice call that it answered.

FaxAbility (New Zealand only)

A subscriber service purchased from the telephone company that provides another phone number on an existing phone line. The Brother fax machine uses the new number to simulate a dedicated fax line.

Fax Detect

Enables your machine to respond to CNG tones if you interrupt a fax call by answering it.

Fax Forwarding

Sends a fax received into the memory to another pre-programmed fax number.

Fax Journal

Lists information about the last 200 incoming and outgoing faxes. TX means Transmit. RX means Receive.

Fax Storage

You can store received faxes in memory.

Fax tones

The signals sent by sending and receiving fax machines while communicating information.

Fax/Tel

You can receive faxes and telephone calls. Do not use this mode if you are using a telephone answering device (TAD).

Fine resolution

Resolution is 203 × 196 dpi. It is used for small print and graphs.

Greyscale

The shades of grey available for copying, scanning and faxing photographs.

Group number

A combination of Speed Dial numbers that are stored in a Speed Dial location for Broadcasting.

Innobella™

Innobella™ is a range of genuine consumables offered by Brother. For best quality results Brother recommends Innobella™ Ink and Paper.

Journal Period

The pre-programmed time period between automatically printed Fax Journal Reports. You can print the Fax Journal on demand without interrupting the cycle.

LCD (Liquid Crystal Display)

The display screen on the machine that shows interactive messages during On-Screen Programming and shows the date and time when the machine is idle.

Manual fax

You can press **Hook** to hear the receiving fax machine answer before you press **Mono Start** or **Colour Start** to begin sending the fax.

Memory Receive

Receives faxes into the machine's memory when the machine is out of paper.

Menu mode

Programming mode for changing your machine's settings.

OCR (optical character recognition)

ScanSoft™ PaperPort™12SE with OCR or Presto! PageManager software application converts an image of text to text you can edit.

Overseas Mode

Makes temporary changes to the fax tones to accommodate noise and static on overseas telephone lines.

Pause

Allows you to place a 3.5 second delay in the dialling sequence while you are dialling using the dial pad or while you are storing Speed Dial numbers. Press the **Redial/Pause** key on the control panel or the `PAUSE` button on the Touchscreen as many times as needed for longer pauses.

PhotoCapture Center™

Allows you to print digital photos from your digital camera at high resolution for photo quality printing.

Photo resolution (Mono only)

A resolution setting that uses varying shades of grey for the best representation of photographs.

PictBridge

Allows you to print photos directly from your digital camera at high resolution for photo quality printing.

Polling

The process of a fax machine calling another fax machine to retrieve waiting fax messages.

Pulse (Not available in New Zealand)

A form of rotary dialling on a telephone line.

Quick Dial List

A listing of names and numbers stored in Speed Dial memory, in numerical order.

Real Time Transmission

When memory is full, you can send faxes in real time.

Remaining jobs

You can check which jobs are waiting in memory and cancel jobs individually.

Remote Access Code

Your own four-digit code (---∗) that allows you to call and access your machine from a remote location.

Remote Activation Code

Press this code (∗ **5 1** (∗ **9 1** for New Zealand)) when you answer a fax call on an extension or external telephone.

Remote Deactivation Code (For Fax/Tel mode only)

When the machine answers a voice call, it pseudo/double-rings. You can pick up at an extension telephone by pressing this code (**# 5 1** (**# 9 1** for New Zealand)).

Remote Retrieval Access

The ability to access your machine remotely from a touch-tone telephone.

Resolution

The number of vertical and horizontal lines per inch. See: Standard, Fine, Super Fine and Photo.

Ring Delay

The number of rings before the machine answers in `Fax Only` and `Fax/Tel` modes.

Ring Volume

Volume setting for the machine's ring.

Scanning

The process of sending an electronic image of a paper document into your computer.

Scan to Media

You can scan a monochrome or colour document on to a memory card or USB Flash memory drive. Monochrome images will be in TIFF or PDF file format and colour images may be in PDF or JPEG file format.

Search

A numerical or alphabetical electronic listing of stored Speed Dial and Group numbers.

Speed Dial

A pre-programmed number for easy dialling.

Standard resolution

203 × 98 dpi (monochrome).
203 × 196 dpi (colour). It is used for regular sized text and the quickest transmission.

Station ID

The stored information that appears on the top of faxed pages. It includes the sender's name and fax number.

Super Fine resolution (Mono only)

203 × 392 dpi. Best for very small print and line art.

TAD (telephone answering device)

You can connect an external TAD to your machine.

Temporary settings

You can choose certain options for each fax transmission and copy without changing the default settings.

Tone (Not available in New Zealand)

A form of dialling on the telephone line used for touch-tone telephones.

Transmission

The process of sending faxes over the phone lines from your machine to the receiving fax machine.

User Settings

A printed report that shows the current settings of the machine.

WLAN Report

A printed report that shows the result of the WLAN Connection.

Transmission Verification Report

A listing for each fax sent, that shows its date, time and number.

C Index

Numerics

2 in 1 ID Copy 35

A

Access codes, storing and dialling 25
Apple Macintosh
  See Software User's Guide.

B

Broadcasting 10
  setting up Groups for 28

C

Caller ID
  Caller ID History report 31
Cancelling
  Fax Forwarding 18, 20
  Fax Storage 18
  jobs awaiting redial 13
Cleaning
  paper feed rollers 54
  printer platen 53
ControlCenter
  See Software User's Guide.
Copy
  2 in 1 ID 35
  density 36
  duplex 37
  enlarge/reduce 33
  page layout (N in 1) 34
  poster 34
  quality 32
  set new default 38
  sort (ADF only) 36
  using ADF 36

D

Dialling
  Groups (Broadcasting) 10
Direct printing
  from a non-PictBridge camera 50
  from a PictBridge camera 48
Dual Access 10
Duplex (2-sided)
  copy 37

F

Fax codes
  changing 19
  Remote Access Code 19
Fax Forwarding
  changing remotely 20, 21
  programming a number 15
Fax Storage 16
  printing from memory 16
  turning off 18
  turning on 16
Fax, from PC
  See Software User's Guide.
Fax, stand-alone
  receiving
    Fax Forwarding 20
    into PC 17
    into the memory 15
    out of paper reception 15
    printing from memory 16
    reducing to fit on paper 22
    retrieving from a remote site 20, 21
  sending 7
    at end of conversation 10
    Broadcasting 10
    cancelling from memory 13
    contrast 7
    delayed batch transmission 13
    delayed fax 12
    from memory (Dual Access) 10
    manual 9
    overseas 12
    Real Time Transmission 11
    Resolution 8
    return to factory default 9
    set new default 8

G

Groups for Broadcasting 28

I

ID Copy 35
Ink cartridges
  checking ink volume 56

L

LCD (Liquid Crystal Display)
  Contrast 3
  Dim Timer 3
  Language 3

M

Macintosh
  See Software User's Guide.
Manual
  transmission 9
Memory Storage 1
Mode, entering
  Timer 4

N

Network
  Printing
    See Network User's Guide.
  Scanning
    See Software User's Guide.

P

Packing and shipping the machine 56
PaperPort™12SE with OCR
  See Software User's Guide. Also see Help in the PaperPort™12SE application.
PhotoCapture Center™
  DPOF printing 41
  from PC
    See Software User's Guide.
  Print settings
    Borderless 45
    Brightness 43
    Colour enhancement 44
    Contrast 43
    Cropping 45
    Date Print 45
    Paper type & size 42
    Quality 42
    Return to factory default 46
    Set new default 46
  Printing
    index 40
    photos 40
  Scan to Media
    memory card 47
    USB Flash memory 47
PictBridge
  DPOF Printing 50
Power failure 1
Presto! PageManager
  See Software User's Guide. Also see Help in the Presto! PageManager application.
Print
  fax from memory 16
  report 31
Printing
  See Software User's Guide.

Q

Quick Dial
  Broadcasting 10
    deleting Groups 29
    using Groups 10
  Group dial
    changing 28
    setting up Groups for Broadcasting 28
  Speed Dial
    setting up from Caller ID history 27
    setting up from outgoing calls 26

R

Reducing
  copies 33
  incoming faxes 22
Remote Retrieval 19
  commands 20
  getting your faxes 21
  remote access code 19
Remote Setup
  See Software User's Guide.

Reports 30
Caller ID 31
Caller ID History Report 31
Fax Journal 31
Journal Period 30
how to print 31
Network Configuration 31
Quick Dial List 31
Transmission Verification 30, 31
User Settings 31
WLAN Report 31
Resolution
setting for next fax 8

S

Scanning
See Software User's Guide.
Shipping the machine 56
Sleep Mode 2
Speed Dial
setting up from Caller ID history 27
setting up from outgoing calls 26

T

Troubleshooting
checking ink volume 56
TX Lock
turning on/off 6

W

Windows®
See Software User's Guide.
Wireless Network
See Quick Setup Guide and Network User's Guide.

C

brother®

Visit us on the World Wide Web
http://www.brother.com/

These machines are approved for use in the country of purchase only. Local Brother companies or their dealers will only support machines purchased in their own countries.