brother

User’s Guide

DS-620
DS-720D

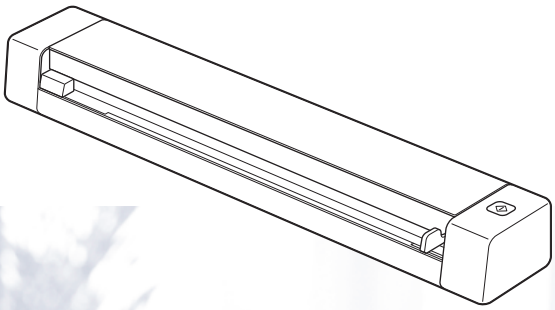

Version B

ARL/ASA/NZ/SAF/GLF

Using the documentation

Thank you for buying a Brother machine! Reading the documentation will help you make the most of your machine.

Symbols and conventions used in the documentation

The following symbols and conventions are used throughout the documentation.

IMPORTANT	IMPORTANT indicates a potentially hazardous situation which, if not avoided, may result in damage to property or loss of product functionality.
NOTE	Notes tell you how you should respond to a situation that may arise or give tips about how the operation works with other features.
Bold	**Bold style** identifies keys on the machine or computer screen.
Italics	*Italicized style* emphasizes an important point or refers you to a related topic.

NOTE

- For DSmobile 720D users: this guide uses DSmobile 620 screen images, unless otherwise indicated.
- If you are using a tablet running Windows®, you can make your selections either by tapping the screen or by clicking with your mouse.

Trademarks

The Brother logo, Brother and DSmobile are registered trademarks of Brother Industries, Ltd.

Apple, Macintosh, and Mac OS are trademarks of Apple Inc., registered in the United States and other countries.

Windows and Windows Vista are either registered trademarks or trademarks of Microsoft Corporation in the United States and / or other countries.

Nuance, the Nuance logo and PaperPort are trademarks or registered trademarks of Nuance Communications, Inc. or its affiliates in the United States and / or other countries.

Any trade names and product names of companies appearing on Brother products, related documents and any other materials are all trademarks or registered trademarks of those respective companies.

Table of Contents

1 General Information 1

Scanner overview 1
LED indications 2

2 Installing the Scanner Driver and Scanning Software 3

For Windows® users 3
For Macintosh users 5

3 Document Specifications 6

Acceptable documents 6
Unacceptable documents 7
Documents recommended for use with the Carrier Sheet 7

4 Scan Preparation 9

Loading a document 9
Loading the Carrier Sheet 10
Important Carrier Sheet tips 11

5 Scanning Applications and Settings 12

Choosing your scanning software 12
Using DSmobileCapture (for Windows®) 13
Changing DSmobileCapture scan settings (for Windows®) 16
File settings 16
Image settings 17
Paper settings 18
Preview settings 20
Options settings 21
Imprinter settings 22
Information 23
Using DSmobileCapture (for Macintosh) 24
Changing DSmobileCapture scan settings (for Macintosh) 25
Image settings 25
File settings 27
Paper settings 28
Options settings 29
Information 30
Using Button Manager V2 (for Windows®) 31
Scanning methods 33
Scan buttons in the Button Manager V2 Button Panel (for Windows®) 34
Scan to an image 34
Scan to an application 34
Scan to an email 35
Scan to a printer 35
Scan to shared folder 35
Scan to a FTP server 36

6 Scanner Calibration 37

Calibration using software (for Windows®) 37
Calibration using software (for Macintosh) 40

7 Scanner Maintenance 42

Cleaning the outside of your scanner 42
Cleaning the inside of your scanner 42

8 Troubleshooting 44

Error and maintenance messages 44
Troubleshooting 45

A Appendix A 50

Specifications 50
General 50
Scanner 51
Interfaces 52
Computer requirements 52

B Appendix B 54

Contacting Brother 54
Register your product 54
Frequently asked questions (FAQs) 54
For customer service 55
Technical support (For PageManager® and BizCard®) 56

1 General Information

Scanner overview

Front

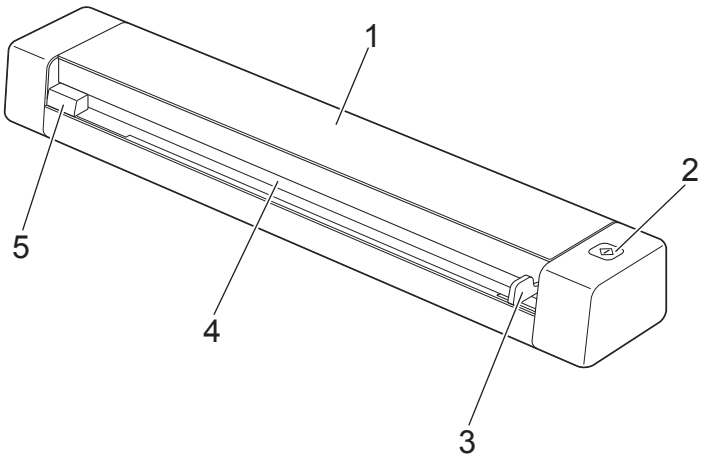

1 Top cover

2 Start button

(For Windows®)
Press to start scanning while using Button Manager V2.
For more information, see *Using Button Manager V2 (for Windows®)* on page 31.

3 Document guide

4 Feeder slot

5 Left edge

Rear

DS-620

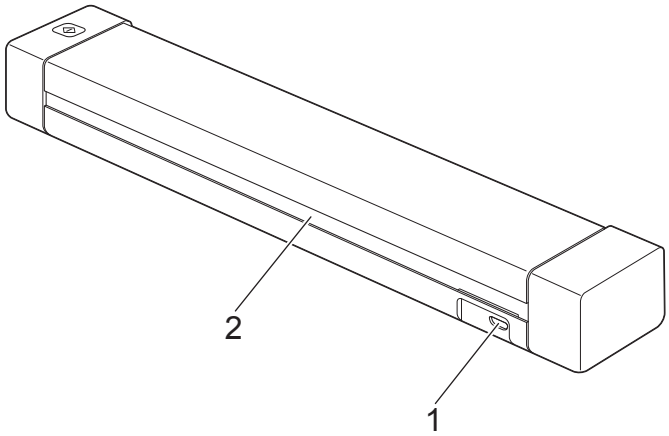

DS-720D

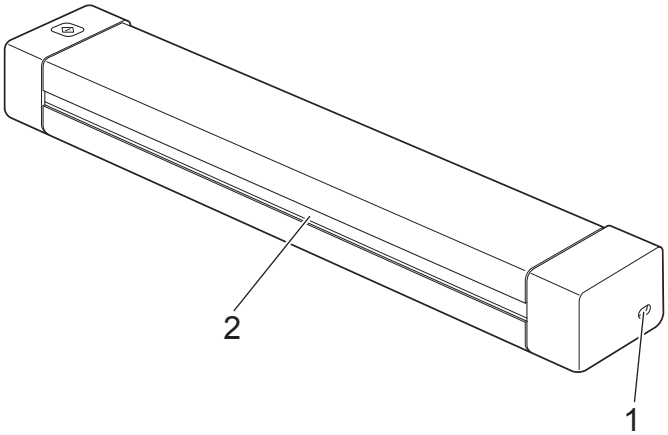

1 Micro USB port

2 Paper ejection slot

LED indications

LED indication	Machine Status
No light	The machine is not connected to your computer.
Green light	The machine is ready to scan.
Blinking green	The machine is scanning a document.
Rapidly blinking red	An error occurred. The top cover is open, or a document is jammed.

2 Installing the Scanner Driver and Scanning Software

For Windows® users

NOTE

- Make sure that your computer is ON and you are logged on with Administrator rights.
- DO NOT connect the Micro USB Cable yet.
- If your computer does not have a DVD-ROM drive, the supplied DVD-ROM does not contain drivers for your operating system, or you want to download manuals and utilities, visit your model page at support.brother.com

1. Insert the DVD-ROM.
2. When the **Setup** screen appears, click **Install Scanner Driver** and follow the on-screen instructions.

NOTE

- If the Brother screen does not appear automatically, go to **My Computer (Computer)**, double-click the CD-ROM icon, and then double-click **AutoRun.exe**.
- When you install the scanner driver, **DSmobileCapture** (a scanning application) will be installed at the same time. For more information on using DSmobileCapture, see *Using DSmobileCapture (for Windows®)* on page 13.

3 Click Additional Applications to install any of these applications during setup.
- **Button Manager V2**: document scanning and storing (to specified destinations).
- **PaperPort™ 12SE** or **PageManager9**: document scanning, editing and management. (Available software applications can vary depending on your country.)
- **Presto! BizCard 6**: business card scanning, editing and management.

NOTE

- For more information on which scanning application will work best for you, see *Choosing your scanning software* on page 12.

For Macintosh users

NOTE

- Make sure that your computer is ON and you are logged on with Administrator rights.
- DO NOT connect the Micro USB Cable yet.
- If your computer does not have a DVD-ROM drive, the supplied DVD-ROM does not contain drivers for your operating system, or you want to download manuals and utilities, visit your model page at support.brother.com

1. Insert the DVD-ROM.
2. Double-click on the DVD icon, and then double-click **DS-620 (DS-720D)**.
3. Double-click on **Brother DS-620 (DS-720D)** and follow the on-screen instructions to install the scanner driver.

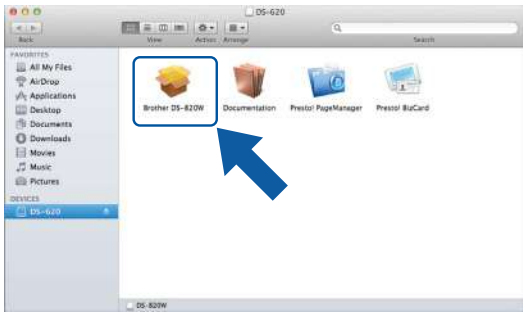

NOTE

When you install the scanner driver, **DSmobileCapture** (a scanning application) will be installed at the same time. For more information on using DSmobileCapture, see *Using DSmobileCapture (for Macintosh)* on page 24.

4. Click one of these folders to install the application during setup.
   - **Presto! PageManager 9**: document scanning, editing and management.
   - **Presto! BizCard 6**: business card scanning, editing and management.

NOTE

- Clicking **Presto! PageManager** or **Presto! BizCard** will bring you to NewSoft Technology Corporation's website. Download the application from this website.
- For more information on which scanning application will work best for you, see *Choosing your scanning software* on page 12.

3 Document Specifications

Acceptable documents

Standard Paper	Length	1 sided scan 90 mm to 812.8 mm 2 sided scan (DS-720D only) 90 mm to 406.4 mm	
	Width	55 mm to 215.9 mm	
	Weight	60 g/m^2 to 105 g/m^2 To scan thinner documents, use the Carrier Sheet (see *Loading the Carrier Sheet* on page 10).	
	Maximum Number of Pages	1 page (1 sheet)	
	Standard Paper Size	A4	210 × 297 mm
		A5	148 × 210 mm
		A6	105 × 148 mm
		A7	74 × 105 mm
		A8	52 × 74 mm
		B5	182 × 257 mm
		B6	128 × 182 mm
		B7	91 × 128 mm
		B8	64 × 91 mm
		Legal	215.9 × 355.6 mm
		Letter	215.9 × 279.4 mm

Plastic Cards (DS-620: non-embossed cards only)	Length	40 mm to 86 mm
	Width	40 mm to 86 mm
	Standard Size (ISO)	85.6 × 54.0 × 0.76 mm
	Material	Plastic (PET)
	Type	Plastic card such as a driver's license or an insurance card
	Thickness	Less than 0.8 mm
	Maximum Number of Pages	1 page (1 sheet)

Receipts	Length	1 sided scan 90 mm to 812.8 mm 2 sided scan (DS-720D only) 90 mm to 406.4 mm
	Width	55 mm to 215.9 mm
	Thickness	More than 0.04 mm
	Maximum Number of Pages	1 page (1 sheet)

Unacceptable documents

- Documents with paper clips or staples
- Documents with wet ink
- Fabrics, metallic sheets, overhead projector sheets
- Glossy or mirrored media
- Embossed plastic cards
- Documents that exceed recommended thicknesses

Documents recommended for use with the Carrier Sheet

Use the supplied Carrier Sheet when you scan the following:

- Documents with a carbon sheet attached on the back
- Documents written in pencil
- Documents narrower than 55 mm wide
- Documents shorter than 90 mm long
- Documents of uneven thickness, such as envelopes
- Documents with large wrinkles or curls
- Bent or damaged documents
- Documents that use tracing paper
- Documents that use coated paper
- Photographs (photographic paper)
- Documents printed on perforated paper
- Documents printed on unusually-shaped paper (not square or rectangular)
- Documents with photos, notes, or stickers affixed to them
- Documents that use carbonless paper
- Documents that use loose-leaf paper or any paper with holes in it
- Photographic negatives

For more information about using the Carrier Sheet when scanning, see *Loading the Carrier Sheet* on page 10.

⚠ CAUTION

To avoid cutting yourself, do not slide or scrape your hand or fingers along the edges of the Carrier Sheet.

IMPORTANT

- Do not place the Carrier Sheet in direct sunlight or in an area subject to high temperatures and high humidity, or the Carrier Sheet may warp.
- Do not place large or heavy objects on the Carrier Sheet.
- Do not bend or pull the Carrier Sheet. If it becomes damaged, it may not be acceptable for scanning, and should not be used.

4 Scan Preparation

Loading a document

IMPORTANT

- Insert only one page into the scanner at a time. Insert the next page only after the first one is completely scanned. Inserting more than one page at a time may cause your scanner to malfunction.
- DO NOT pull on the document while it is feeding.
- DO NOT use paper that is curled, wrinkled, folded, ripped, stapled, paper clipped, pasted, or taped.
- DO NOT try to scan cardboard or fabric.

NOTE

- Make sure there is enough space behind the paper ejection slot. The scanned document will be ejected from the rear of the scanner.
- Make sure documents that have ink or correction fluid on them are completely dry.
- Certain types of plastic cards may be scratched when scanned. To prevent damage to the card, we recommended using the Carrier Sheet. For more information, see *Loading the Carrier Sheet* on page 10.

1. Set your document ❶ face up in the feeder slot ❷ and align the left edge of the page with the left edge of the feeder slot ❸.
   To scan a plastic card ❶, set the card top edge first into the feeder slot ❷ and align the left edge of the card with the left edge of the feeder slot ❸.
   For **DS-720D**: When you perform duplex scanning, insert the first page face up into the feeder slot.
2. Slide the document guide ❹ until it touches the right side of the document.
3. Gently insert the document until you feel its top edge touch the inside of the scanner.

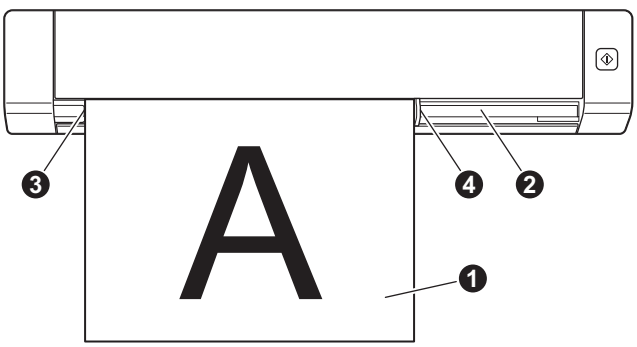

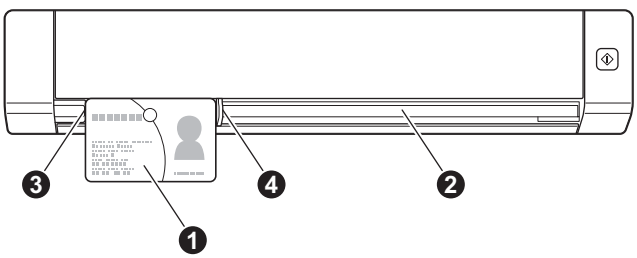

Loading the Carrier Sheet

NOTE

Make sure documents that have ink or correction fluid on them are completely dry.

1. Place the document you want to scan in the left corner of the Carrier Sheet and align the top of the document with the top left corner of the Carrier Sheet.

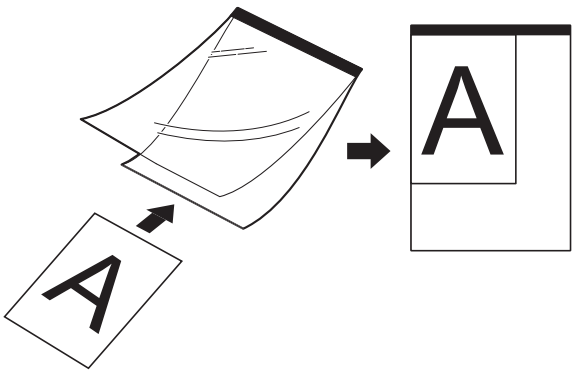

2. Set the Carrier Sheet ❶, document face up, with the black edge first in the feeder slot ❷ and align the left edge of the Carrier Sheet with the left edge of the feeder slot ❸.
   For **DS-720D**: When you perform duplex scanning, insert the first page face up into the feeder slot.
3. Slide the document guide ❹ against the right side of the Carrier Sheet.
4. Gently insert the Carrier Sheet until you feel its top edge touch the inside of the scanner.

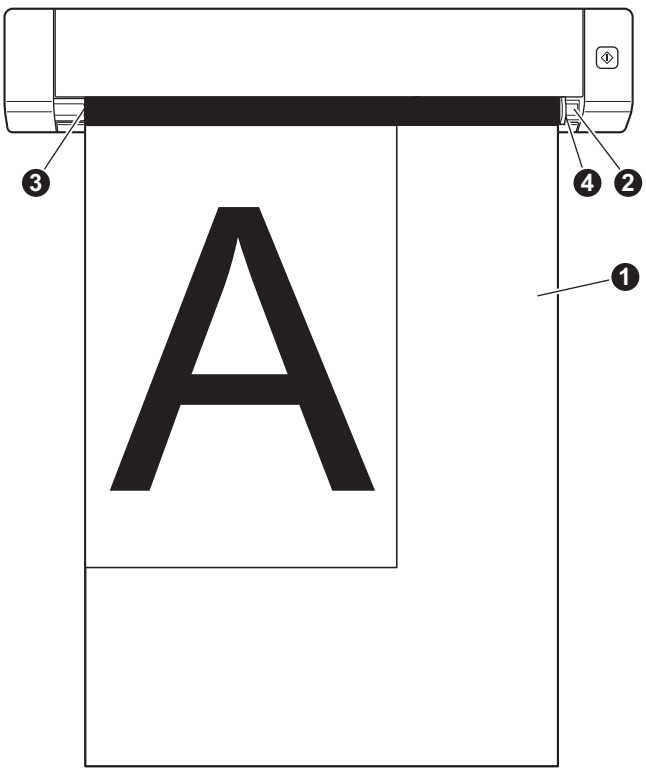

Important Carrier Sheet tips

- To avoid document jams, do not load the Carrier Sheet upside down. For more information, see *Loading the Carrier Sheet* on page 10.
- To avoid document jams, do not put several small documents into the Carrier Sheet at the same time. Insert only one document into the Carrier Sheet at a time.
- Do not write on the Carrier Sheet, as the writing may be seen in scanned documents. If the Carrier Sheet becomes dirty, wipe it with a dry cloth.
- Do not leave documents in the Carrier Sheet for extended periods of time, as the printing on the documents may bleed through onto the Carrier Sheet.

5 Scanning Applications and Settings

Choosing your scanning software

After downloading the scanner drivers, select a scanning software application for saving scanned images to your computer. Brother has supplied several options for you on the DVD-ROM; use this table to help determine which of the included scanning applications will work best for you:

Software	Function	For more information
DSmobileCapture	Document scanning, browsing and filing	For Windows®: See *Using DSmobileCapture (for Windows®)* on page 13. For Macintosh: See *Using DSmobileCapture (for Macintosh)* on page 24.
Button Manager V2 (Windows® only)	Document scanning and storing (in specified destinations)	See the software's user instructions or *Using Button Manager V2 (for Windows®)* on page 31.
Nuance PaperPort™ 12SE (Windows® only)	Document scanning, OCR scanning, editing and management	See the software's user instructions.
Presto! PageManager 9	Document scanning, OCR scanning, editing and management	See the software's user instructions.
Presto! BizCard 6	Business card scanning, editing and management	See the **Presto! BizCard User's Manual** which will be downloaded onto your computer when you download the software.

NOTE

- Clicking **Presto! PageManager** or **Presto! BizCard** will bring you to NewSoft Technology Corporation's website. Download the application from this website.

Using DSmobileCapture (for Windows®)

1. Connect the supplied Micro USB Cable to the Micro USB port on your scanner. Connect the cable to your computer.
2. Double-click the **DSmobileCapture** shortcut on your desktop.
3. The **Select Scanner Model** dialog box appears. Select **TWAIN** under **Driver Type**, select **Brother DS-620 (DS-720D)** under **Scanner Model**, and then click **OK**.

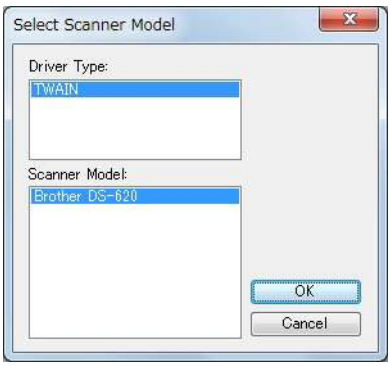

4. **DSmobileCapture** launches.

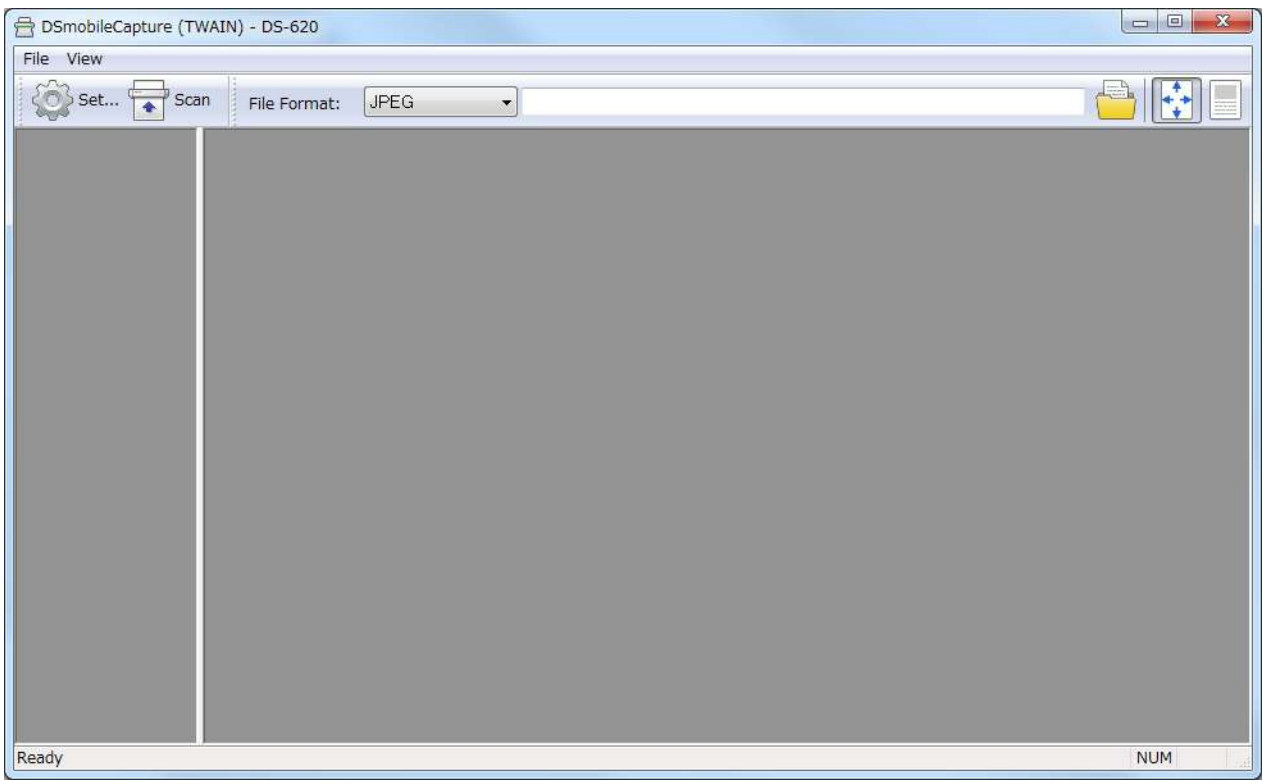

5 Change the scanning settings, if needed.
For more information on changing settings, see *Changing DSmobileCapture scan settings (for Windows®)* on page 16.

6 Insert a document into your scanner.

7 Click **Scan** . Your scanner starts scanning.

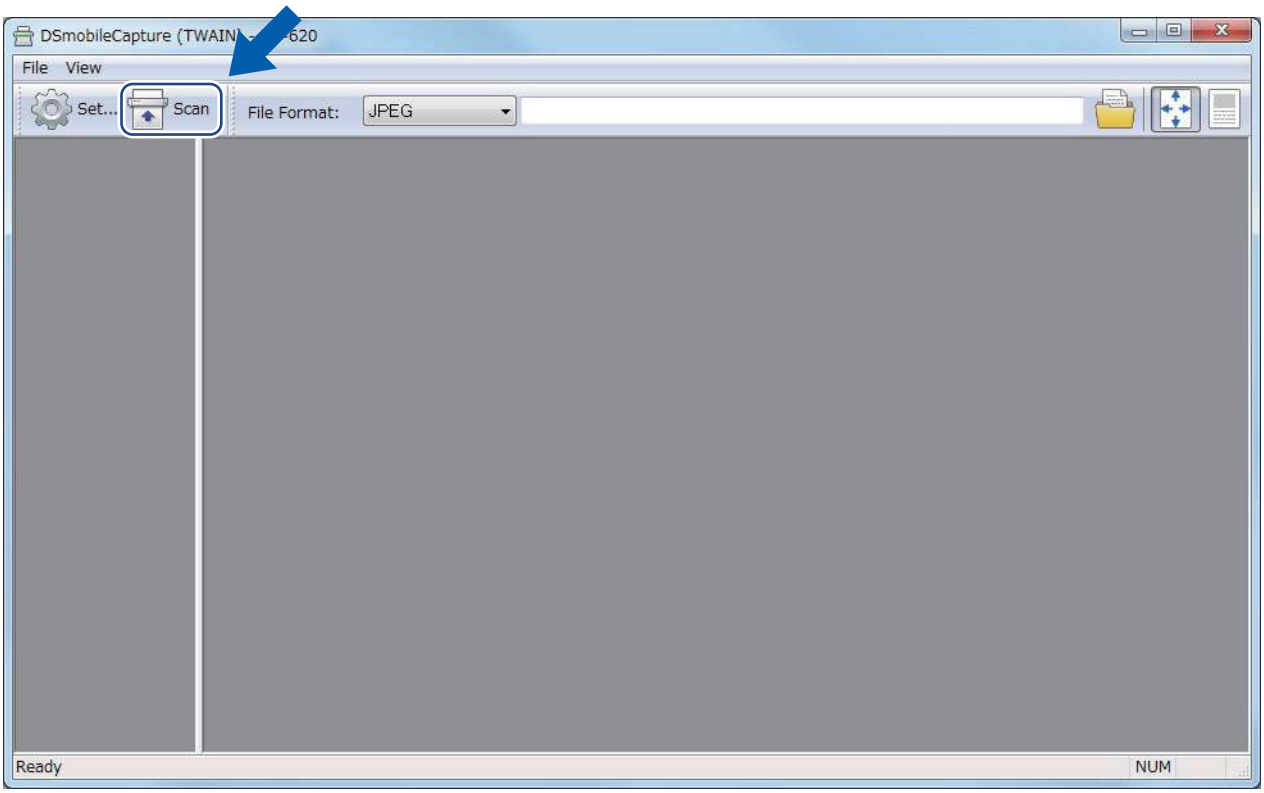

A thumbnail of the scanned image appears in the DSmobileCapture screen and the scanned image will be saved in the directory you specified in step 5.
Check the scan result just in case.

8 For continuous scanning, insert the next document into the scanner while **Waiting for next job...** screen is displayed. When the document is ready, scanning will start automatically.
To stop the continuous scanning, click **Cancel** on **Waiting for next job...** screen.

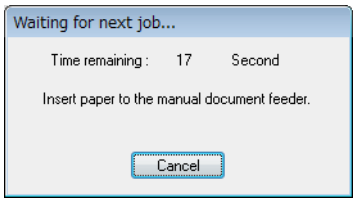

NOTE

- To change the time delay when waiting for the next job, see *Paper settings* on page 18.
- To save multiple documents as one file, choose **Multi-page PDF** or **Multi-page TIFF** from the **File Format** drop-down list.

Changing DSmobileCapture scan settings (for Windows®)

File settings

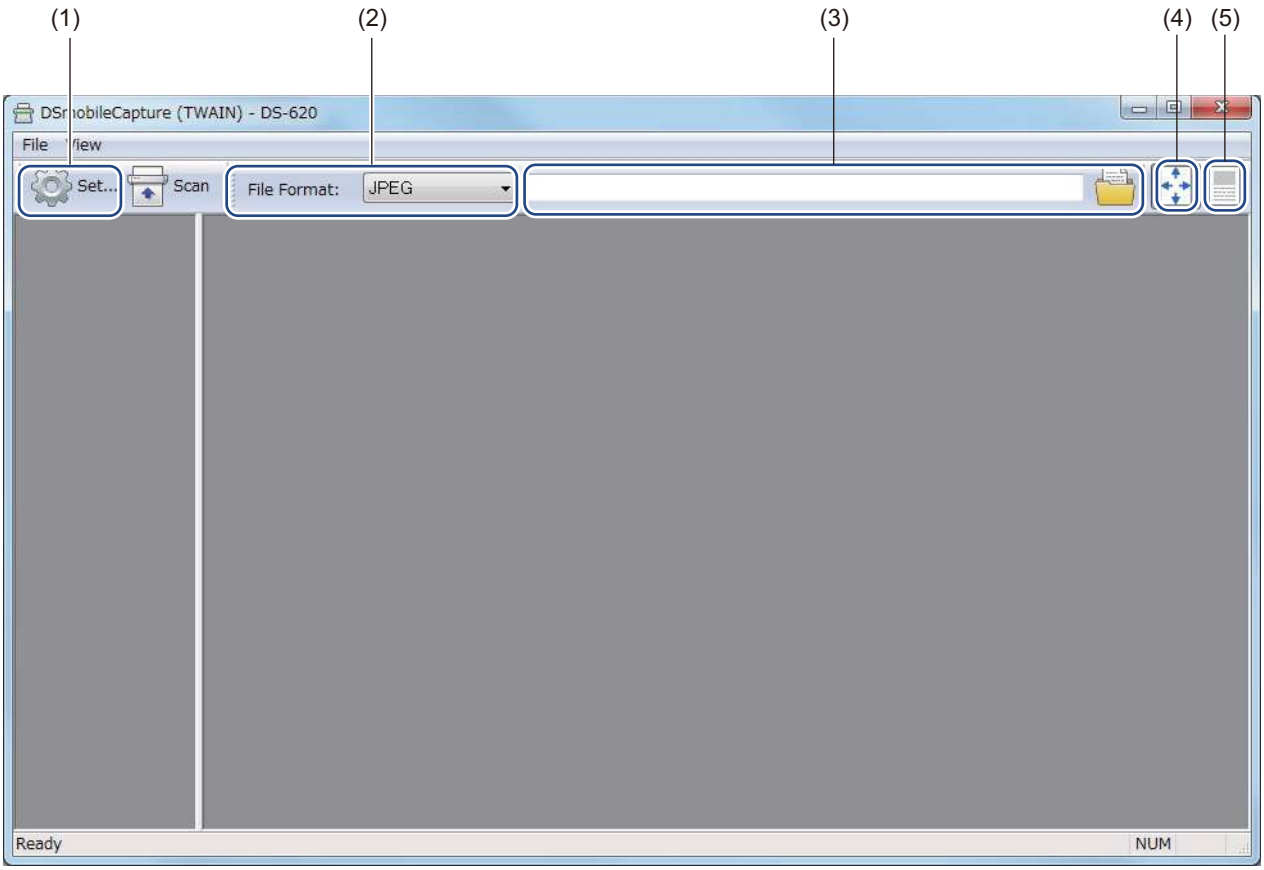

(1)	**Setup**	Change scanner properties.
(2)	**File Format**	Change the file format. Select the format you want from the drop-down list.
(3)	**Path**	Specify the directory where you want to save scanned images.
(4)	**Fit Page**	You can view and size the scanned image. You cannot use **Fit Page** when **PDF** or **Multi-page PDF** is chosen in **File Format**.
(5)	**Actual Size (100%)**	You can view the scanned image in **Actual Size (100%)**. You cannot use **Actual Size (100%)** when **PDF** or **Multi-page PDF** is chosen in **File Format**.

Image settings

Click **Setup** , and then click the **Image** tab to choose the image type and to set basic scan settings.

NOTE

This image is from the DS-720D.

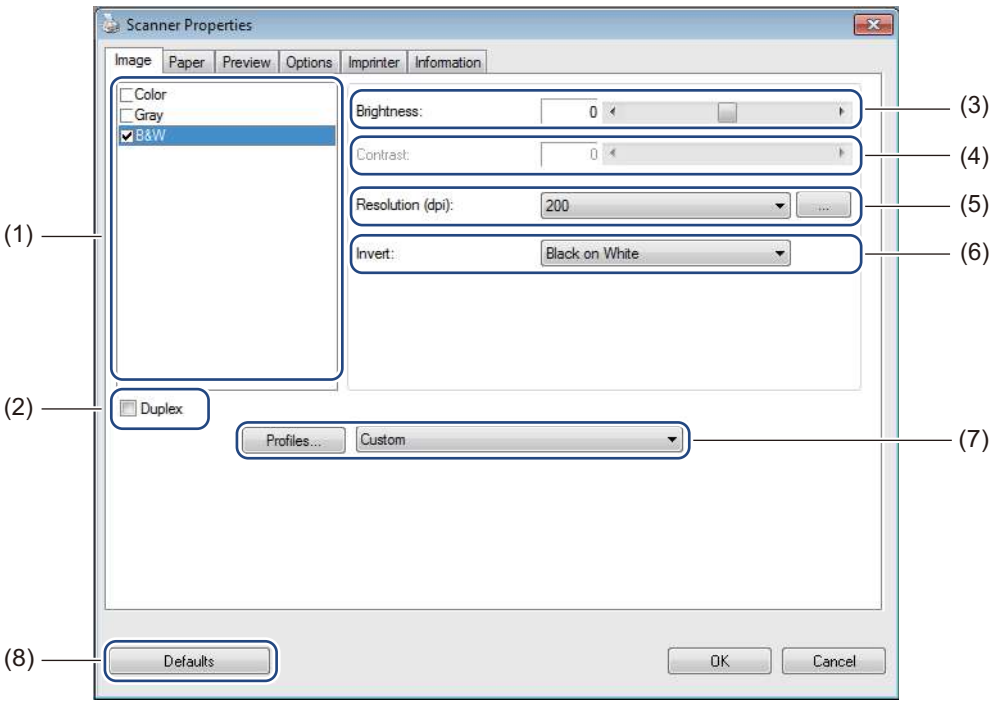

(1)	**Image Selection Box**	Choose the type of document you want to scan.
(2)	**Duplex**	(DS-720D only) Select the **Duplex** check box to perform Duplex (2 side) scanning.
(3)	**Brightness**	Adjusts the lightness or darkness of an image. The range is from **-100** to **+100**. The factory default is **0**.
(4)	**Contrast**	Adjusts the range between the darkest and the lightest shades in the image. The range is from **-100** to **+100**. The factory default is **0**.
(5)	**Resolution**	Determine the quality of the scanned image. The factory default is **200 dpi**.
(6)	**Invert**	Reverse the brightness and the colours in the image.
(7)	**Profiles**	Save or change the scan setting in the Scanner Properties dialog box.
(8)	**Defaults**	Reset values in **this and all other** Properties tabs to the original factory settings.

Paper settings

Click **Setup** , and then click the **Paper** tab to define values related to image output.

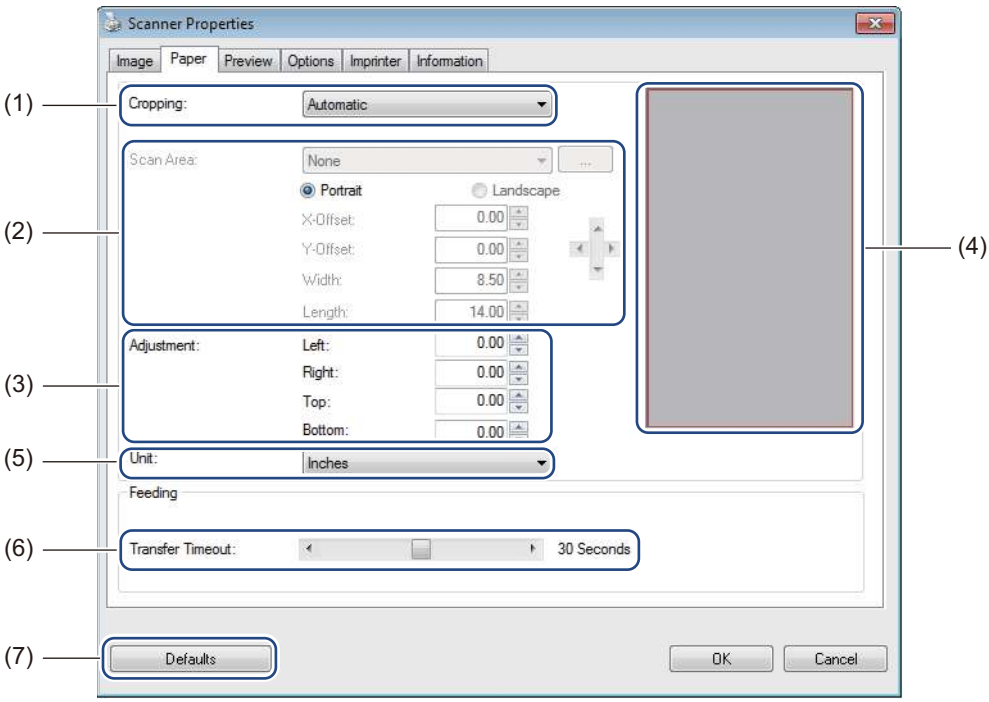

(1)	**Cropping**	**Cropping** allows you to capture a portion of the scanned document. ■ **Automatic** Choose **Automatic** to allow the software to adjust the cropping window according to the document size. Use this option for batches of mixed-sized documents. ■ **Fix for Transfer** Choose **Fix for Transfer** if you want the ability to define the area or zone to be imaged. Use for batches of same-sized documents.

(2)	**Scan Area**	Choose your paper size from the drop-down list or create a custom paper size by clicking **Add** in the drop-down list. If you selected **Fix for Transfer** in **Cropping** (1), define the **X-Offset** and **Y-Offset** or specify **Width** and **Length** to redefine the scan area. The **Display Area** (4) in this screen displays image placement as you change the values. • **X-Offset** - the distance from the left edge of the document to the left edge of the scanned area. • **Y-Offset** - the distance from the top edge of the document to the top edge of the scanned area. • **Width** - the width of the scanned area. • **Length** - the length of the scanned area. • Use these arrows (or your mouse) to move the scan area; you can view the results in the **Display Area** of this screen.
(3)	**Adjustment**	**Adjustment** allows you to add a specific margin at the left, right, top and bottom of your image. This may help to reduce possible corner clipping on any skewed images. Select a value from **0** to **+5** mm. The **Adjustment** result will not be shown in the **Display Area**.
(4)	**Display Area**	Displays image placement as you change the values in **Scan Area** (2).
(5)	**Unit**	**Unit** allows you to define your preferred measurement system. Select **Inches**, **Millimeters**, or **Pixels** from the drop-down list.
(6)	**Transfer Timeout**	**Transfer Timeout** allows you to set the amount of time (in seconds) the scanner will wait before starting automatic scanning after the first scan job is completed. When you have many separate documents that need to be scanned with the same scan settings, this feature is especially useful. The default time is **30** seconds. The value ranges from **0** to **60** seconds.
(7)	**Defaults**	Reset values in **this and all other** Properties tabs to the original factory settings.

Preview settings

Click **Setup** , and then click the **Preview** tab to preview your image before scanning, to make sure the scan area is set correctly.

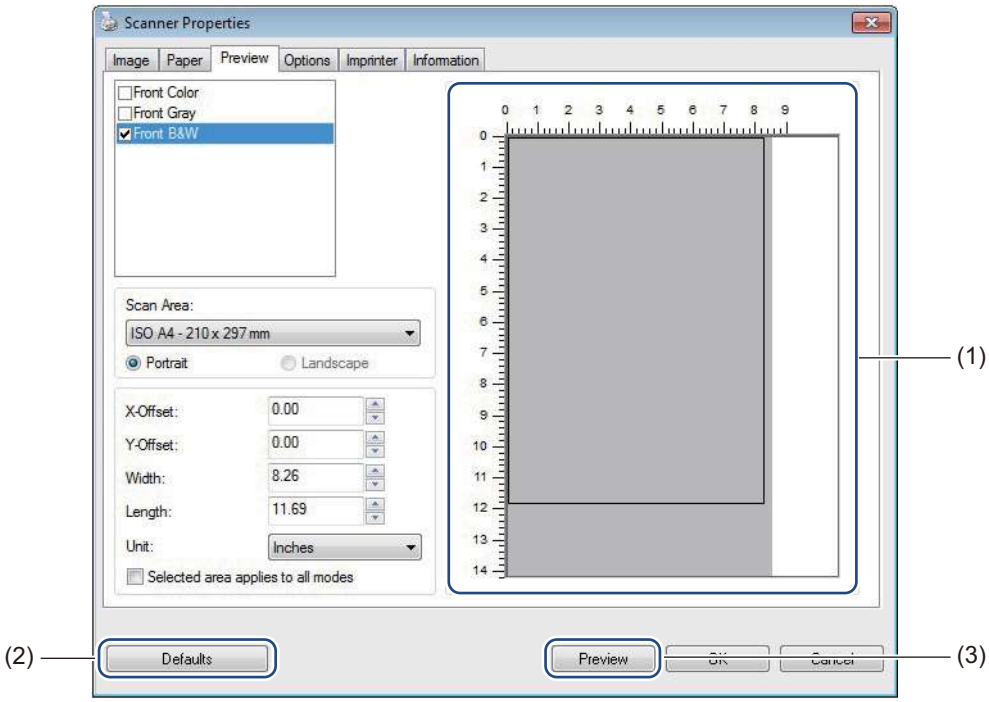

(1)	**Preview Window**	When you click **Preview** (3), the scanned image will appear in this area. This preview image lets you define your scan area.
(2)	**Defaults**	Reset values in **this and all other** Properties tabs to the original factory settings.
(3)	**Preview**	Click to start the preview scan. The scanned image will appear in the **Preview Window** (1). Note that the scanned image is only for the preview and will not be saved.

NOTE

If you chose **Automatic** cropping, in the **Paper** tab screen, you cannot preview your scan on this screen.

Options settings

Click **Setup** , and then click the **Options** tab to choose additional image processing settings or calibrate your scanner.

NOTE

This image is from the DS-720D.

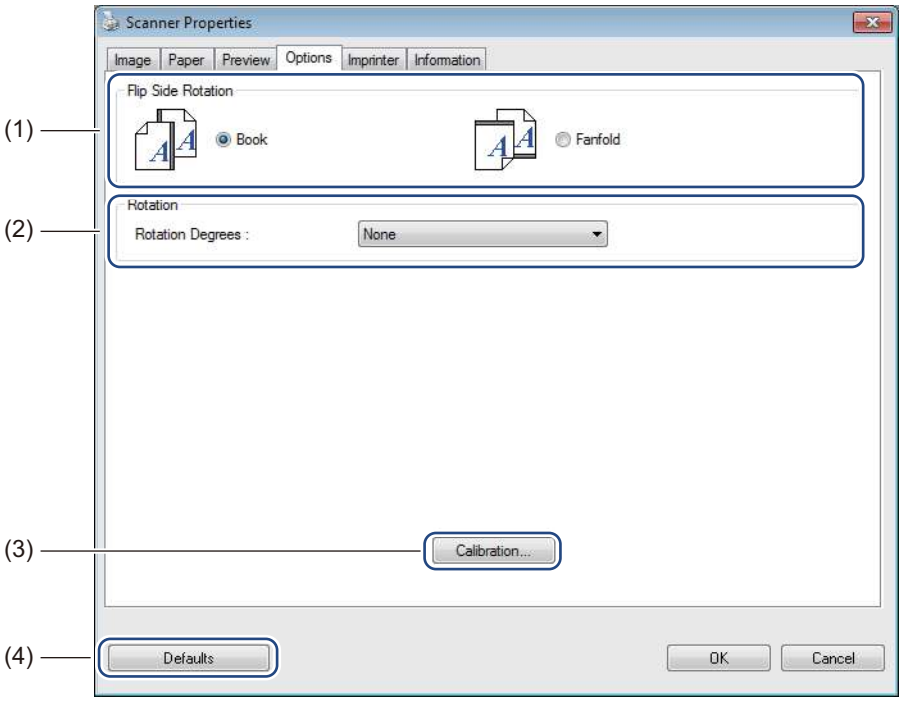

(1)	**Flip Side Rotation (DS-720D only)**	■ **Book** Select **Book** to maintain the same image orientation on the reverse side of the output page. ■ **Fanfold** Select **Fanfold** to rotate the image orientation 180 degrees on the reverse side of the output page.
(2)	**Rotation**	Choose the rotation angle from the drop-down list if you want to rotate your scanned image.
(3)	**Calibration**	Calibrate the scanner. For more information, see *Calibration using software (for Windows®)* on page 37.
(4)	**Defaults**	Reset values in **this and all other** Properties tabs to the original factory settings.

Imprinter settings

Click **Setup** , and then click the **Imprinter** tab to print alphanumeric characters, date, time, document count and custom text on your scanned images.

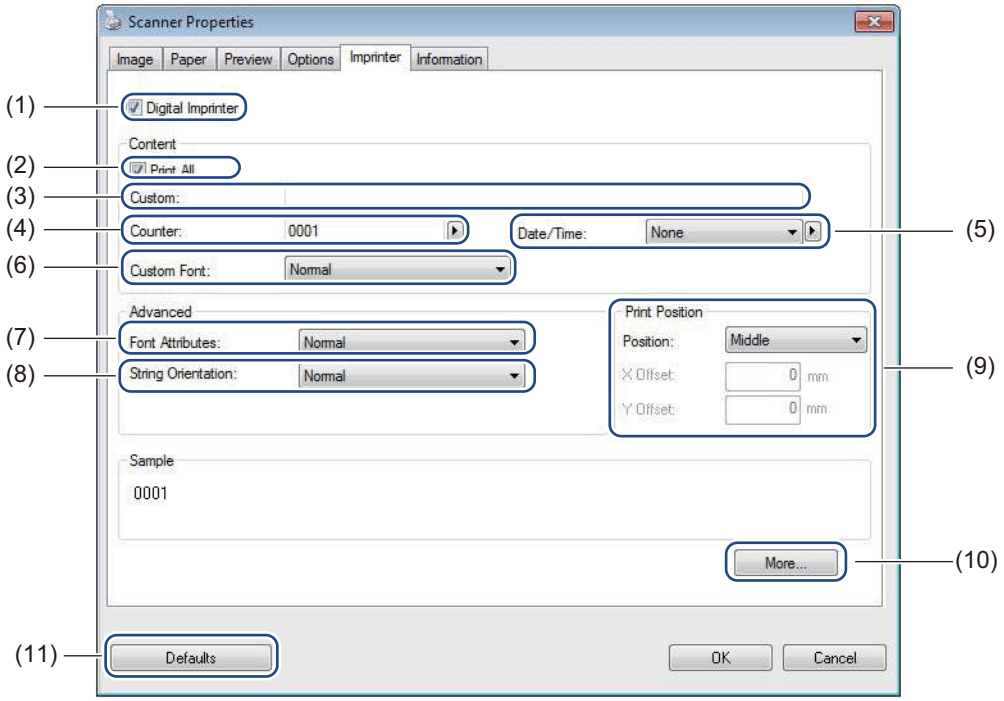

(1)	**Digital Imprinter**	Select **Digital Imprinter** to print the message on the front of your scanned image.
(2)	**Print All**	Select the **Print All** check box to print your chosen text content, on all pages of your document. Clear the **Print All** check box to print the text on the first page only.
(3)	**Custom**	Type the text you want to print.
(4)	**Counter**	Displays the page count for the scan session.
(5)	**Date / Time**	Select a format from the drop-down list if you want to include the date and time in your text.
(6)	**Custom Font**	Click the drop-down list to select a font for your text.
(7)	**Font Attributes**	Select a font attribute from the drop-down list. Options include **Normal**, **Underline**, **Double**, or **Bold**.
(8)	**String Orientation**	Select a text orientation from the drop-down list. Options include **Normal**, **Rotated**, **Vertical**, **Vertical Inversion**, **90 Degrees CW**[1] or **90 Degrees CCW**[2].
(9)	**Print Position**	Select the position of your text from the drop-down list. Options include **Top**, **Middle**, **Bottom,** or **Custom**. If you choose **Custom**, enter the **X Offset** and **Y Offset** values to specify the text position.
(10)	**More**	Click **More...** to set **Size**, **Density** and **Transparency** for your text.
(11)	**Defaults**	Reset values in **this and all other** Properties tabs to the original factory settings.

1: Clockwise
2: Counter-clockwise

Information

Click **Setup** , and then click the **Information** tab to view system and scanner information.

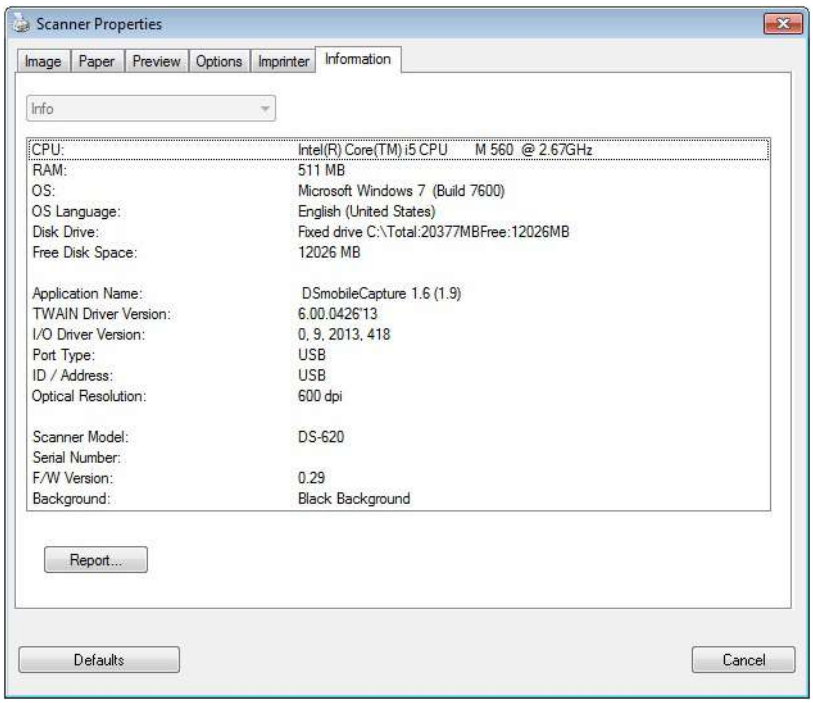

Using DSmobileCapture (for Macintosh)

1. Connect the supplied Micro USB Cable to the Micro USB port on your scanner. Connect the cable to your computer.
2. Double-click the **DSmobileCapture** shortcut on your desktop.
3. **DSmobileCapture** launches.

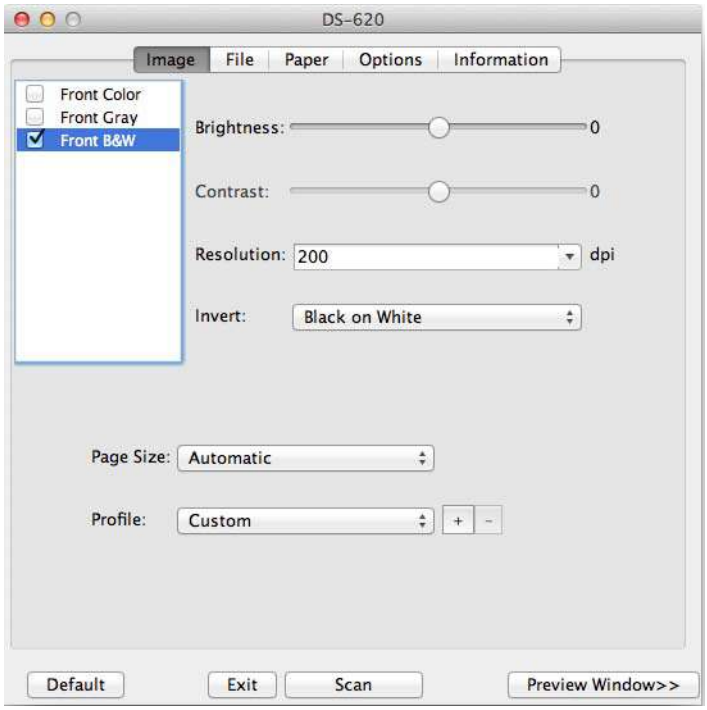

4. Change the scanning settings, if needed.
   For more information on changing settings, see *Changing DSmobileCapture scan settings (for Macintosh)* on page 25.
5. Insert a document into your scanner.
6. Click **Scan** in the DSmobileCapture screen.
   Your scanner starts scanning. The scanned image will be saved in the directory you specified in step 4. Check the scan result just in case.

Changing DSmobileCapture scan settings (for Macintosh)

Image settings

Click the **Image** tab to choose image type and to set several basic scan settings.

NOTE

This image is from the DS-720D.

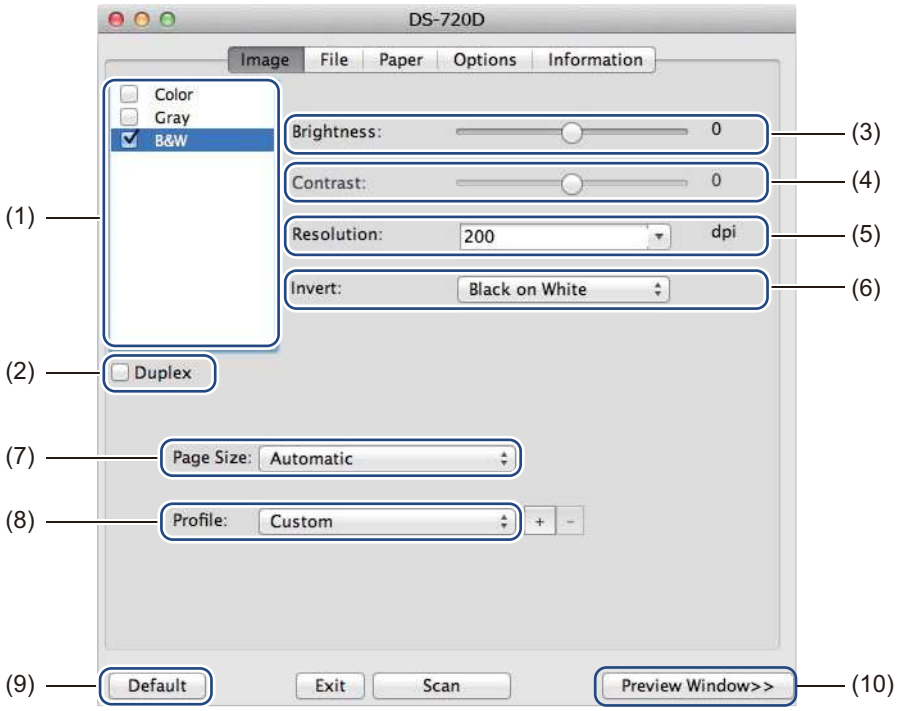

(1)	**Image Selection Box**	Choose the type of document you want to scan.
(2)	**Duplex**	(DS-720D only) Select the **Duplex** check box to perform Duplex (2 sided) scanning.
(3)	**Brightness**	Adjusts the lightness or darkness of an image. The range is from **-100** to **+100**. The factory default is **0**.
(4)	**Contrast**	Adjusts the range between the darkest and the lightest shades in the image. The range is from **-100** to **+100**. The factory default is **0**.
(5)	**Resolution**	Determine the quality of the scanned image. The factory default is **200 dpi**.
(6)	**Invert**	Reverse the brightness and the colours in the image.
(7)	**Page Size**	**Page Size** allows you to capture a portion of the scanned document. Choose your paper size from the **Page Size** pop-up list.
(8)	**Profiles**	Save or change the scanning setting in the dialog box of Scanner Properties.
(9)	**Default**	Reset values in **this and all other** Properties tabs to the original factory settings.

(10)	**Preview Window**	Click to preview your image before scanning. This preview image helps you define your scan area. When you click **Preview**, scanning for the preview starts and the scanned image will appear in the **Preview Window**. Note that the scanned image is only for the preview and will not be saved.

File settings

Click the **File** tab to configure the settings related to the file name and the directory where you want to save the scanned image.

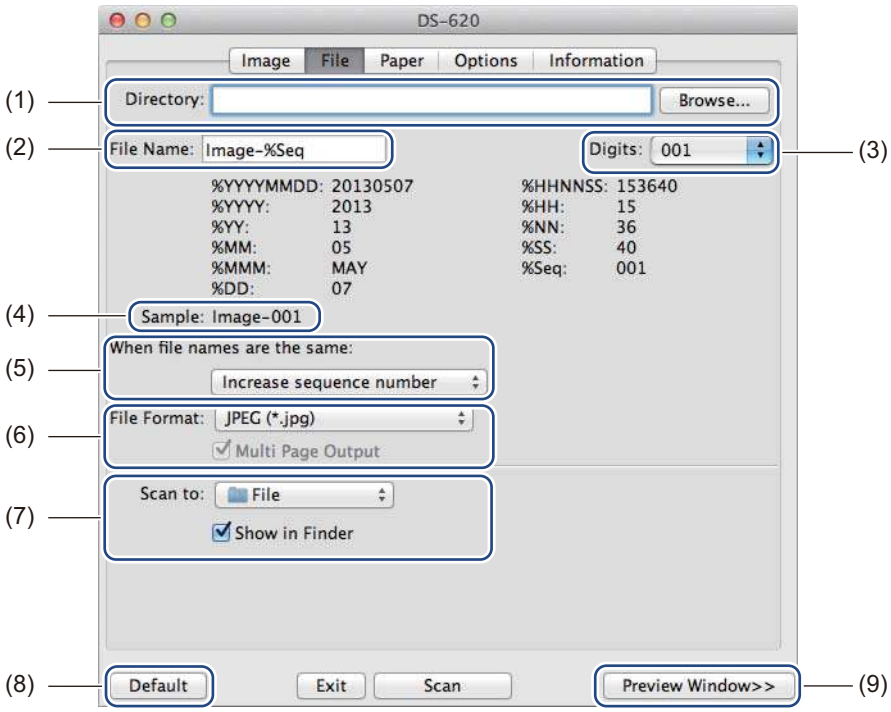

(1)	**Directory**	Specify the directory where you want to save scanned images.
(2)	**File Name**	Set the rule for the file name of the scanned image.
(3)	**Digits**	Determine the starting number of the sequence number that is included in the file name.
(4)	**Sample**	Preview the file name that you set.
(5)	**When file names are the same**	Change the file name if the same name already exists in the directory you chose in **Directory**.
(6)	**File Format**	Choose the file format for the scanned image. When you choose **TIFF** or **PDF**, the **Multi Page Output** option is available. You can continue to scan the next document after the first scan job is completed.
(7)	**Scan to**	Choose the destination to send the scanned image.
(8)	**Default**	Reset values in **this and all other** Properties tabs to the original factory settings.
(9)	**Preview Window**	Click to preview your image before scanning. This preview image helps you define your scan area. When you click **Preview**, scanning for the preview starts and the scanned image will appear in the **Preview Window**. Note that the scanned image is only for the preview and will not be saved.

Paper settings

Click the **Paper** tab to define values related to image output.

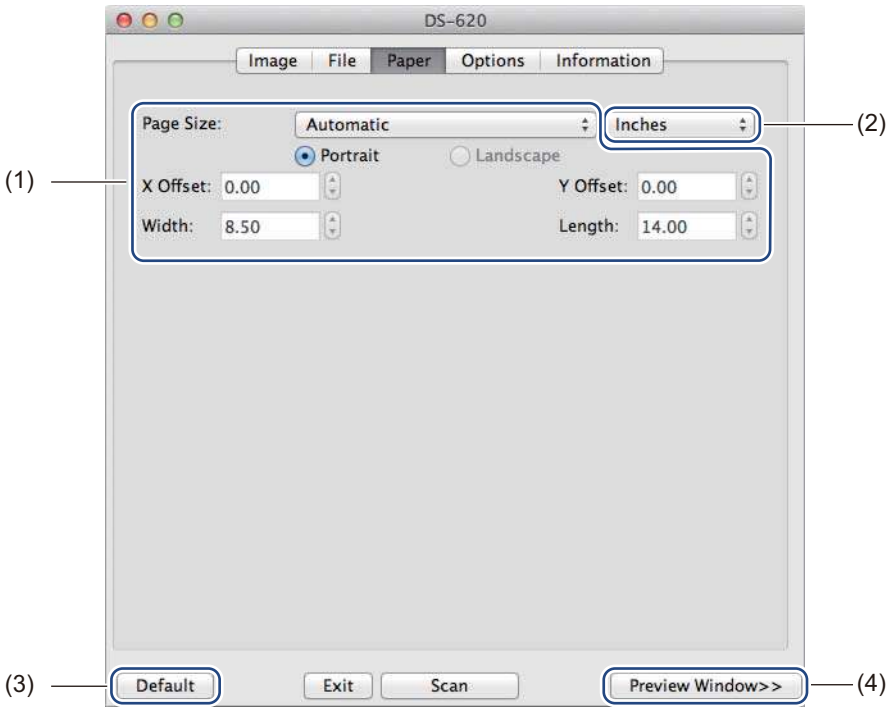

(1)	**Page Size**	**Page Size** allows you to capture a portion of the scanned document. Choose your paper size from the **Page Size** pop-up list, define the **X Offset** and **Y Offset** values or specify **Width** and **Length** to define your scanned area. Click **Preview Window** (4) to preview the image placement as you change the values. • **X Offset** - the distance from the left edge of the document to the left edge of the scanned area. • **Y Offset** - the distance from the top edge of the document to the top edge of the scanned area. • **Width** - the width of the scanned area. • **Length** - the length of the scanned area.
(2)	**Unit**	**Unit** allows you to define your preferred measurement system. Select **Inches**, **Millimeters**, or **Pixels** from the pop-up list.
(3)	**Default**	Reset values in **this and all other** Properties tabs to the original factory settings.
(4)	**Preview Window**	Click to preview your image before scanning. This preview image helps you define your scan area. When you click **Preview**, scanning for the preview starts and the scanned image will appear in the **Preview Window**. Note that the scanned image is only for the preview and will not be saved.

Options settings

Click the **Options** tab to set some additional image processing settings or calibrate your scanner.

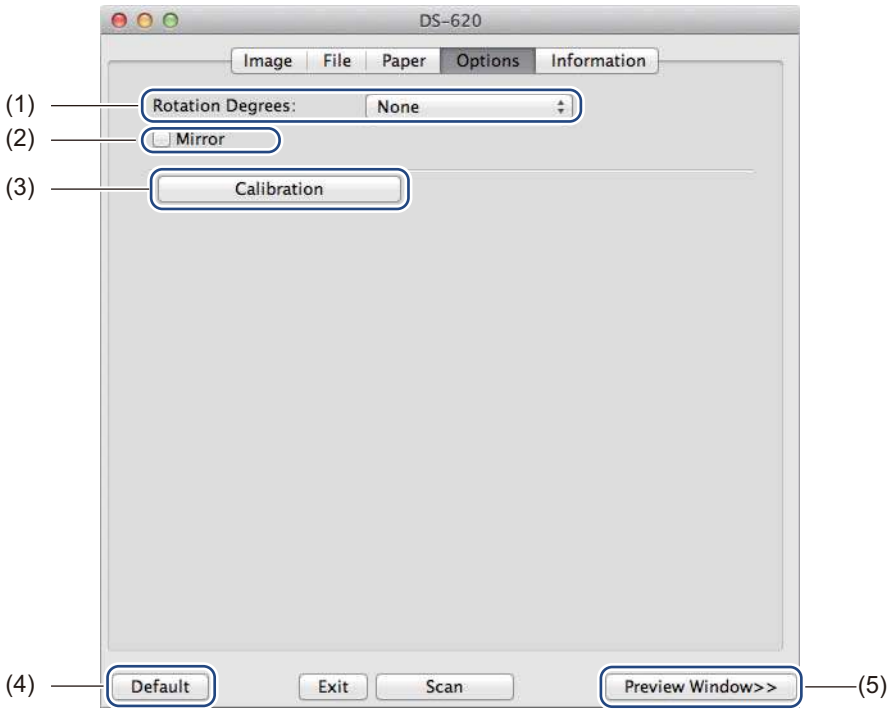

(1)	**Rotation Degrees**	Choose the rotation angle from the pop-up list if you want to rotate your scanned image.
(2)	**Mirror**	Select the **Mirror** check box to reverse your image.
(3)	**Calibration**	Calibrate the scanner. For more information, see *Calibration using software (for Macintosh)* on page 40.
(4)	**Default**	Reset values in **this and all other** Properties tabs to the original factory settings.
(5)	**Preview Window**	Click to preview your image before scanning. This preview image helps you define your scan area. When you click **Preview**, scanning for the preview starts and the scanned image will appear in the **Preview Window**. Note that the scanned image is only for the preview and will not be saved.

Information

Click the **Information** tab to view system and scanner information.

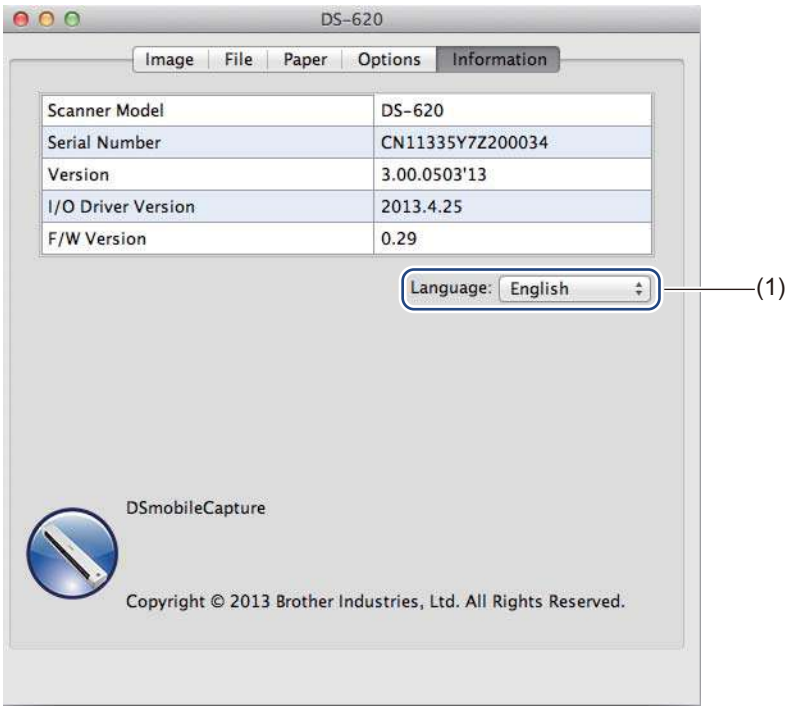

(1)	**Language**	Choose the language you want to display from the pop-up list.

Using Button Manager V2 (for Windows®)

NOTE

- For more detailed instructions, see the *Button Manager V2 User's Guide* from the application's help menu.
- To see the help menu, right-click the **Button Manager V2** icon on the system tray, and then click **Help**.

Use either one of these two methods to launch **Button Manager V2**.

To display the shortcut icon and launch Button Manager V2 from your system tray

1. Connect the Micro USB Cable to the Micro USB port on your scanner. Connect the Micro USB Cable to a USB port on your computer.
2. Click the **Button Manager V2** icon on the system tray at the bottom right corner of your computer screen.
3. **Button Manager V2** launches.

To launch Button Manager V2 from the Windows® Start button

1. Click **Start** > **All Programs** > **Brother DS-620 (DS-720D) Scanner** > **Button Manager** > **Button Manager V2**.
2. When the **Select Scanner Model** dialog box appears, select your scanner model from the list, and then click **OK**.
3. **Button Manager V2** launches.

Scanning methods

There are two ways to scan using **Button Manager V2**. If necessary, check or change scan settings before scanning.

To scan using the scan button on the Button Manager V2 Button Panel

1. Insert a document into your scanner.
2. Launch **Button Manager V2**.
3. If necessary, right-click the desired scan button in the **Button Manager V2** Button Panel to change scan settings.
   For more information, see the *Button Manager V2 User's Guide*.
4. Click the scan button you want to use in the **Button Manager V2** Button Panel to start scanning.

To scan using the Start button on your scanner

1. Insert a document into your scanner.
2. Launch **Button Manager V2**.
3. If necessary, right-click the desired scan button in the **Button Manager V2** Button Panel to change scan settings.
   For more information, see the *Button Manager V2 User's Guide*.
4. Select the check box to the left of the scan button you want to use.
5. Press the **Start** button on your scanner to start scanning.

Scan buttons in the Button Manager V2 Button Panel (for Windows®)

Scan to an image

Use this option to open the scanned image in a specific application. Note that the application must already be open and running on your computer.

To change scan settings, right-click the **Scan** 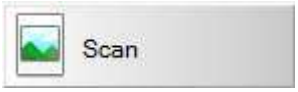

button (see the *Button Manager V2 User's Guide*).

1. Insert a document into your scanner.
2. Launch **Button Manager V2**.
3. Click **Scan** 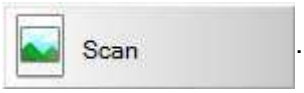

.

   When scanning is complete, the scanned image will be inserted to your open and running application. Check the scan result just in case.

NOTE

- If no application launches or the application is minimized, the scanned image will be saved in a predefined folder (for more information about changing the folder path, see the *Button Manager V2 User's Guide*).
- If two or more applications are open, the scanned image will appear in the active application.

Scan to an application

Use this option to open the scanned image in an application that you choose from a list.

To change scan settings, right-click the **Scan to App**

button.

1. Insert a document into your scanner.
2. Launch **Button Manager V2**.
3. Click **Scan to App**

to start scanning.

   When scanning is complete, the scanned image will be opened in an application you chose from the displayed list.
   Check the scan result just in case.

Scan to an email

Use this option to attach the scanned image to an email.

To change scan settings or email software, right-click the **E-mail**

button.

1. Insert a document into your scanner.
2. Launch **Button Manager V2**.
3. Click **E-mail**

to start scanning.

   When scanning is complete, your email software launches and the scanned image will be attached to a blank email.
   Check the scan result just in case.

Scan to a printer

Use this option to print the scanned image from your default printer.

To change scan settings or destination printer, right-click the **Printer**

button.

1. Insert a document into your scanner.
2. Launch **Button Manager V2**.
3. Click **Printer** 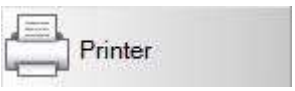

to start scanning.

   When scanning is complete, the scanned image will be printed from your default printer.
   Check the scan result just in case.

Scan to shared folder

Use this option to save the scanned image in a shared folder on your network.

To change scan settings, right-click the **Shared Folder**

button.

1. Insert a document into your scanner.
2. Launch **Button Manager V2**.
3. Click **Shared Folder**

to start scanning.

   When scanning is complete, the scanned image will be sent directly to the shared folder.
   Check the scan result just in case.

Scan to a FTP server

Use this option to save the scanned image in a folder on your FTP server.

To change scan settings, right-click the **FTP**

button.

1. Insert a document into your scanner.
2. Launch **Button Manager V2**.
3. Click **FTP**

to start scanning.

   When scanning is complete, the scanned image will be sent directly to the folder on your FTP server. Check the scan result just in case.

6 Scanner Calibration

Calibrate your scanner only if the scanned images start to look fuzzy, the colour looks abnormal (darker than normal), after 8,000 scans, or if the scanner has been stored without being used for a long time.

You will need the Calibration Sheet that came with your scanner, to successfully perform calibration.

Calibration using software (for Windows®)

1. Double-click the **DSmobileCapture** shortcut on your desktop.
2. The **Select Scanner Model** dialog box appears. Select **TWAIN** under **Driver Type**, select **Brother DS-620 (DS-720D)** under **Scanner Model**, and then click **OK**.
3. **DSmobileCapture** launches.
4. Click **Setup** .

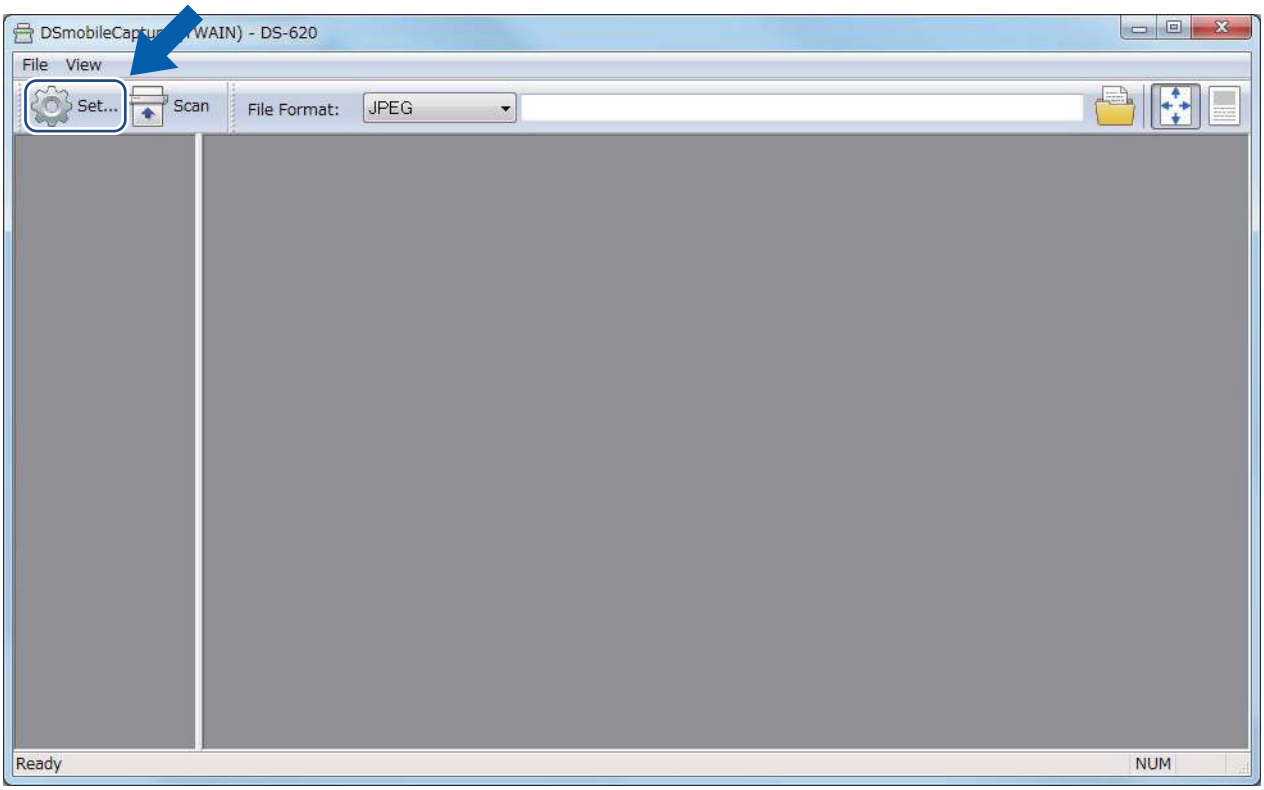

5 Click the **Options** tab.

6 Click **Calibration** to start calibrating the scanner.

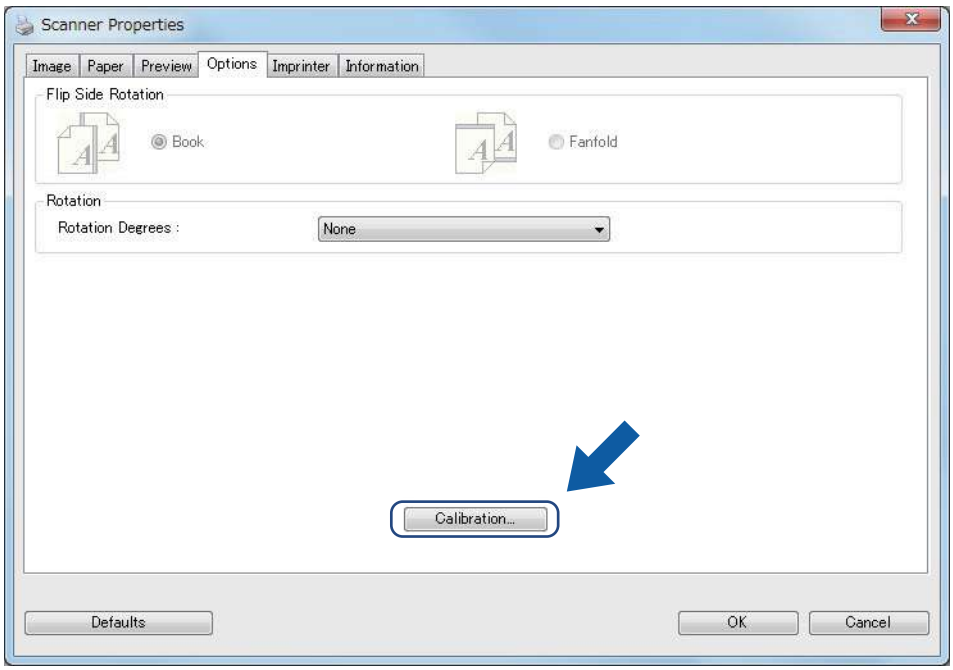

7 A message appears, prompting you to insert the Calibration Sheet.

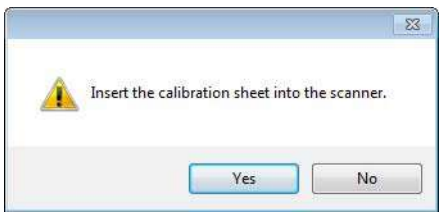

8 Hold the edges of the Calibration Sheet and insert it into the feeder slot as shown below. Click **Yes**.

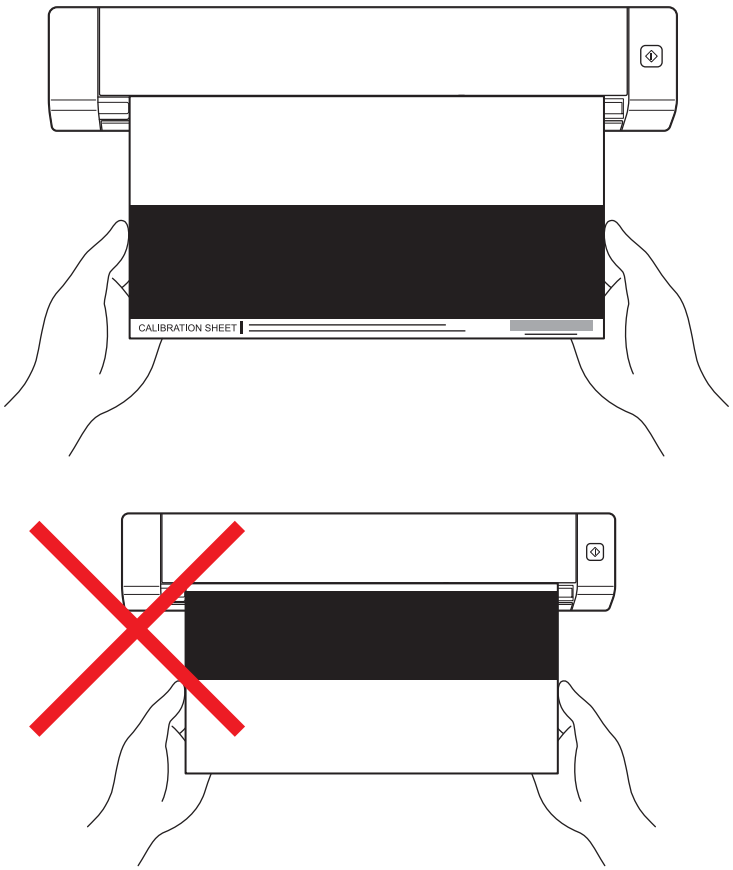

NOTE

Hold only the edges of the Calibration Sheet and be careful not to touch the white or black area. Leaving marks or fingerprints on this sheet can cause errors in calibration.

9 Scanning starts automatically.

10 After the Calibration Sheet is scanned, a **Calibration was successful** message appears on your screen, indicating that calibration is finished. Click **OK** to end calibration, and then click **OK** to close the **Options** screen.

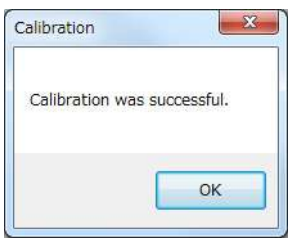

NOTE

If a **Calibration failed** message appears on your screen, remove the Micro USB Cable from your computer. Reconnect the Micro USB Cable to the computer and perform the calibration again. If calibration fails again, check the scanner's print head to ensure it is clean.

Calibration using software (for Macintosh)

1. Double-click the **DSmobileCapture** shortcut on your desktop.
2. **DSmobileCapture** launches.
3. Click the **Options** tab.
4. Click **Calibration** to start calibrating the scanner.

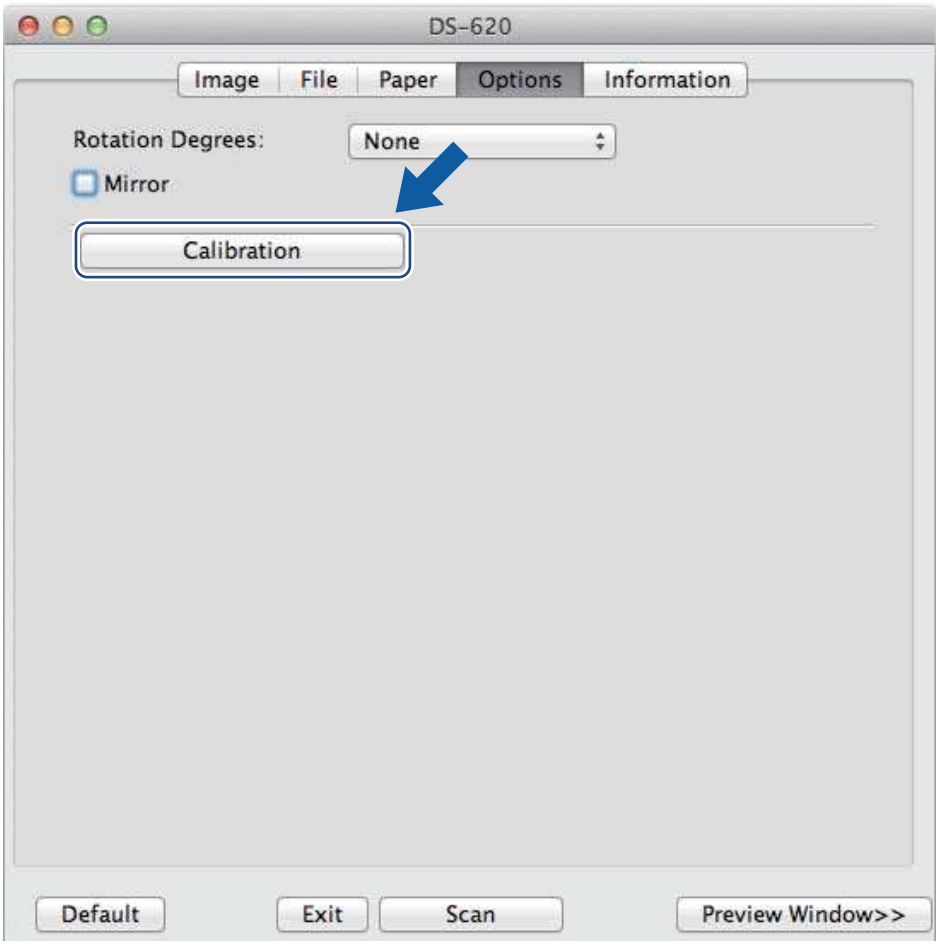

5. A message appears, prompting you to insert the Calibration Sheet.

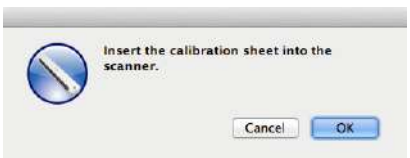

6 Hold the edges of the Calibration Sheet and insert it into the feeder slot as shown below. Click **OK**.

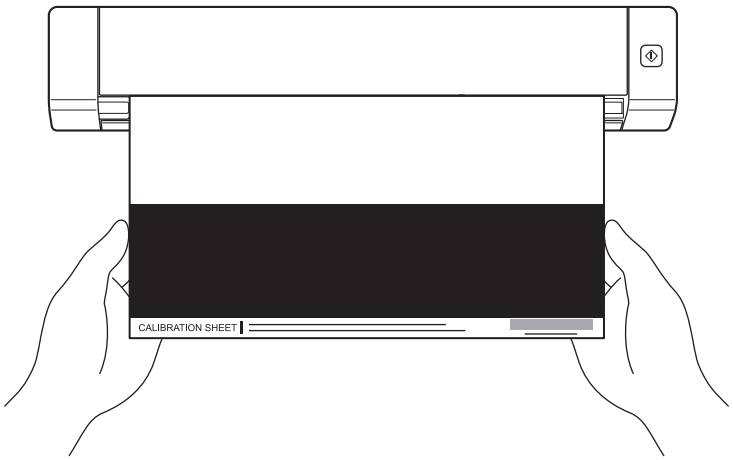

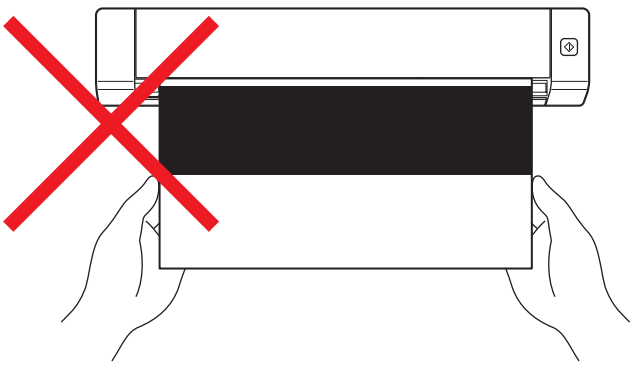

NOTE

Hold only the edges of the Calibration Sheet and be careful not to touch the white or black area. Leaving marks or fingerprints on this sheet can cause errors in calibration.

7 Scanning starts automatically.

8 After the Calibration Sheet is scanned, a **Calibration was successful** message appears on your screen, indicating that calibration finished successfully. Click **OK** to end calibration.

NOTE

If a **Calibration failed** message appears on your screen, remove the Micro USB Cable from your computer. Reconnect the Micro USB Cable to the computer and perform the calibration again. If calibration fails again, check the scanner's print head to ensure it is clean.

7 Scanner Maintenance

IMPORTANT

Do not use any solvents or corrosive liquid, such as alcohol, kerosene, etc., to clean any part of the scanner, or the plastic may be permanently damaged.

Cleaning the outside of your scanner

To prevent dust accumulation, we recommend cleaning the exterior of your scanner periodically.

1. Remove the Micro USB Cable from both your scanner and your computer.
2. Wipe the outside of the scanner with a dry, soft, lint-free cloth.
   If necessary, wipe the exterior with a cloth lightly dampened with water or diluted detergent, and finish with a dry cloth.
3. Reconnect the Micro USB Cable to your scanner and your computer.

Cleaning the inside of your scanner

To maintain the scanned image quality, clean the interior of your scanner periodically. If vertical lines or stripes appear on scanned images, this indicates that it is time to clean your scanner.

1. Remove the Micro USB Cable from both your scanner and your computer.
2. Open the scanner's top cover.

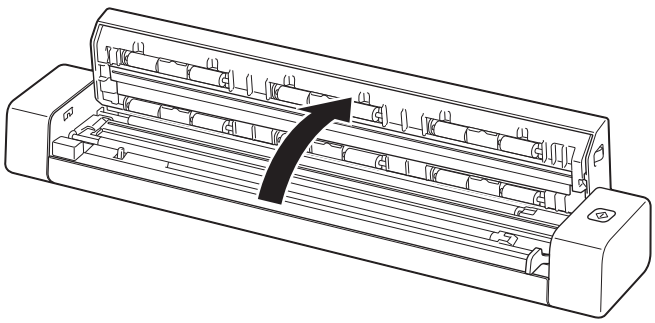

3 Gently wipe the scanning glass strip and feed rollers with the supplied cleaning cloth.

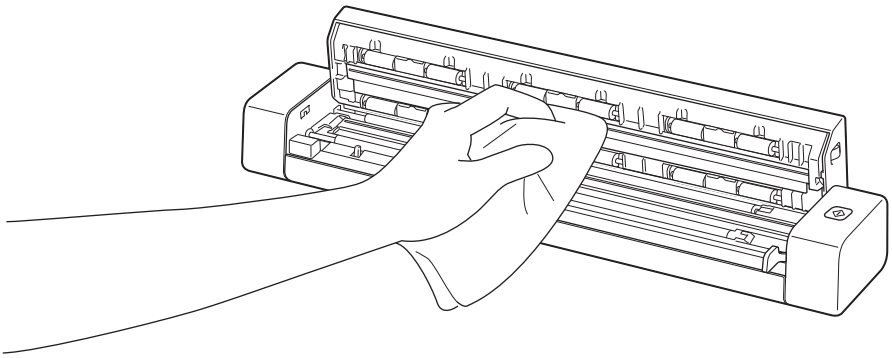

4 Close the top cover.

5 Reconnect the Micro USB Cable to your scanner and your computer.

8 Troubleshooting

IMPORTANT

For technical help, you must contact the Customer Service center in the country where you bought the scanner. For more information, see *For customer service* on page 55. Calls must be made ***from within*** that country.

If you think there is a problem with your scanner, check the chart below and follow the suggestions.

Most problems can be easily resolved by yourself. If you need additional help, go to the Brother Solutions Center at support.brother.com for more FAQs and troubleshooting tips.

Using non-Brother supplies may affect scan quality, hardware performance and product reliability.

Error and maintenance messages

Error message	Cause	Action
Driver busy	The scanning application in use crashed, or the scanner driver is locked with administrator rights.	Remove the Micro USB Cable from your computer. Reconnect the Micro USB Cable to the computer, and launch the application again.
A document is jammed. Please open the top cover and remove the jammed paper by pulling it forward, then try again.	A document is jammed.	Open the top cover and remove the document by pulling it forward, then close the top cover.
The cover of the manual document feeder is open.	Your scanner's top cover is open when scanning starts.	Close the top cover and start scanning again.
No paper in the manual document feeder	No document is set in the feeder slot.	Place your document in the feeder slot and start scanning again.
Cannot find the scanner.	Your scanner is not connected to your computer.	Confirm that the Micro USB Cable connecting the scanner to the computer is properly connected.
Operation system return error	Your Operating System cannot recognize your scanner.	■ Confirm that the Micro USB Cable connecting the scanner to the computer is properly connected. ■ Restart the computer.

Error message	Cause	Action
Calibration failed. Please reboot the machine.	An error caused the calibration to fail. For example, the Calibration Sheet is not inserted in the correct direction.	■ Remove the Micro USB Cable from your computer. Reconnect the Micro USB Cable to the computer, and perform the calibration again. ■ Insert the Calibration Sheet in the correct direction. • For Windows®: to perform the calibration using software, see *Calibration using software (for Windows®)* on page 37. • For Macintosh: to perform the calibration using software, see *Calibration using software (for Macintosh)* on page 40.

Troubleshooting

Scanning difficulties

Difficulty	Cause	Suggestions
My scanner does not turn on.	The supplied Micro USB Cable is not connected securely.	Make sure the Micro USB Cable is securely connected to your scanner and computer.
My computer does not recognize the scanner when it is connected via the Micro USB Cable.	Causes may vary.	Make sure the Micro USB Cable is securely connected to your scanner and computer. Remove the Micro USB Cable and reconnect the Micro USB Cable to your scanner and computer.
My scanned images have black lines running through them, blank spaces, or are of overall bad quality.	This problem occurs if the scanner is not calibrated correctly or if a foreign object, such as a paper clip or ripped paper, is stuck in the scanner.	1. Check the document feeder slot and make sure that the slot is clear. If foreign objects are found, remove them from your scanner. 2. Calibrate your scanner (see *Scanner Calibration* on page 37). If scan quality is not improved after you calibrate your scanner: 1. Clean the scanner (see *Scanner Maintenance* on page 42). 2. Calibrate your scanner again.

Difficulty	Cause	Suggestions
My document did not scan correctly.	The Document Guides are not adjusted to fit the width of the document.	Adjust the Document Guide to fit the width of the document.
	The settings are not suitable for your document. For example, a A4 document was fed when A5 was selected as document size.	Make sure the document size settings are suitable for your document. For Windows®: see *Paper settings* on page 18. For Macintosh: see *Paper settings* on page 28.
The scan speed is too slow.	The resolution is not suitable for your document.	Decrease the scanner resolution. For Windows®: see *Image settings* on page 17. For Macintosh: see *Image settings* on page 25.
My scanner is connected but it will not feed my document or do anything else.	Your document is not set correctly.	Insert your document until you feel the top edge of the document touch the inside of your scanner.
	Your document is too thin or too thick.	Check that your document is acceptable (see *Document Specifications* on page 6). If your document is not the problem: 1. Confirm that the Micro USB Cable connecting your scanner to your computer is securely connected. 2. Re-install the scanner driver from the DVD-ROM.
	The scanner's top cover is open.	Close the top cover and start scanning again.
The document is jammed.	Causes may vary.	Open the scanner's top cover and gently pull out the document. Make sure that no piece of paper remains inside the scanner.
	Your document is not acceptable for the machine (for example, if the paper is too long).	■ Make sure your document is acceptable for the machine (see *Document Specifications* on page 6). ■ Use the supplied Carrier Sheet (see *Loading the Carrier Sheet* on page 10).
My scanner gets warm.	It is normal for your scanner to emit a small amount of heat after prolonged use.	If there is a strange smell coming from the scanner or the scanner feels a little bit hot to the touch, immediately remove the Micro USB Cable from your scanner and computer.

Difficulty	Cause	Suggestions
The scan quality is poor.	Paper dust has accumulated inside your scanner.	Clean your scanner (see *Scanner Maintenance* on page 42).
	Calibration needs to be performed.	Perform the calibration. • For Windows®: to perform the calibration using software, see *Calibration using software (for Windows®)* on page 37. • For Macintosh: to perform the calibration using software, see *Calibration using software (for Macintosh)* on page 40.
	The scanner resolution is too low.	Increase the scanner resolution. For Windows®: see *Image settings* on page 17. For Macintosh: see *Image settings* on page 25.
Colours in the scanned image are dark.	The settings are not appropriate for the type of document being scanned.	Adjust the scanning settings. For Windows®: see *Image settings* on page 17. For Macintosh: see *Image settings* on page 25.
	Calibration needs to be performed.	Perform the calibration. • For Windows®: to perform the calibration using software, see *Calibration using software (for Windows®)* on page 37. • For Macintosh: to perform the calibration using software, see *Calibration using software (for Macintosh)* on page 40.
OCR feature does not work.	The scanner resolution is too low.	Increase the scanner resolution. Use **PaperPort™ 12SE** or **Presto! PageManager** 9 to increase the resolution.
	Nuance PaperPort™ 12SE has not been installed on your computer.	Make sure you have installed Nuance PaperPort™ 12SE from the supplied DVD-ROM.
	Presto! PageManager has not been installed on your computer.	Make sure you have installed Presto! PageManager from the supplied DVD-ROM.
The scanned image is skewed (slanted).	The scanner's Document Guide are not adjusted to fit the width of the document.	Adjust the Document Guide to fit the width of the document.
White vertical lines or white stripes appear on the scanned image. 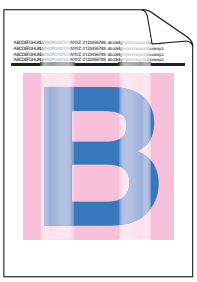	The scanner is in direct sunlight.	• Move the scanner indoors, or out of direct sunlight.
	A light source is near the scanner.	• Move the scanner away from the light source.

Difficulty	Cause	Suggestions
Bleed-through is seen in the scanned image.	Your document is too thin.	Check that your document is acceptable (see *Document Specifications* on page 6).
	The contrast setting is improper.	Increase the contrast level. For Windows®: see *Image settings* on page 17. For Macintosh: see *Image settings* on page 25.
(**DS-720D** only) Duplex scanning cannot be performed.	The duplex scanning settings are not configured in **DSmobileCapture**.	Select the **Duplex** check box of the **Image** tab in **DSmobileCapture**.

Software difficulties

Difficulty	Cause	Suggestions
When I press **Scan** in my scanning software, an error message appears: **Please install scanner** or **The scan was aborted because the scanner is not powered on or not connected properly**.	This error message appears if your scanner isn't recognized by your computer.	1. Make sure your scanner is connected properly. 2. Confirm that the Micro USB Cable is working and that it is not frayed or damaged in any way. If the error still appears after verifying that the Micro USB Cable is connected properly, reinstall the scanner driver from the DVD-ROM.
I cannot install the scanner drivers. (Windows®)	You may not have been given administrator privileges.	Log into Windows® with administrator rights.
I cannot install the scanner drivers. (Macintosh)	You may not have been given administrator privileges.	From Apple menu, select **System Preferences** > **System** > **Users & Groups**. The left pane of the window will list the current accounts, one of which should be your name with the word "Admin" underneath. If this is not the case, contact your system administrator.
The file size is too large.	The size of the file will depend upon many factors. The physical size of the document and the amount of text / graphics on each page are factors that will affect the resulting file size. These factors cannot be changed.	To produce the smallest scan file for a given document, use the lowest resolution and Black and White mode, and scan the smallest area possible. Using the opposite settings (scanned in the highest resolution, in the Colour mode, and scanning the largest area possible) will produce the largest-sized file. For Windows®: see *Changing DSmobileCapture scan settings (for Windows®)* on page 16. For Macintosh: see *Changing DSmobileCapture scan settings (for Macintosh)* on page 25.

Other difficulties

Difficulty	Cause	Suggestions
I do not have or lost the Calibration Sheet.	Causes may vary.	The special glossy calibration sheet that came with your scanner will give you the best calibration results. To order a new Calibration Sheet, please contact Brother.
I want to use a USB hub.	Causes may vary.	A USB hub may not be able to supply enough power to the scanner.

A Appendix A

Specifications

NOTE

This chapter provides a summary of the scanner's specifications. For additional specifications, go to your scanner's product page at www.brother.com and click the **Specifications** tab.

General

			DS-620	DS-720D
Power Source			USB bus-power 5V DC	
Power consumption		**Scanning**	2.5 W 500 mA or less	
		Ready	1.0 W 200 mA or less	
Dimensions		**Width**	290.5 mm	
		Height	36.7 mm	40.7 mm
		Depth	52.5 mm	66.9 mm
Weight			Approx. 400 g	Approx. 500 g
Temperature		**Operating**	5 ·C to 35 ·C	
Humidity		**Operating**	15 to 85%	
		Storage	10 to 90%	
Document Size	**Single Sheet**	**Width**	55 mm to 215.9 mm	
		Length	1 side scan 90 mm to 812.8 mm	
			-	2 side scan (DS-720D only) 90 mm to 406.4 mm

A

Scanner

		DS-620	DS-720D
Colour / Black		Yes / Yes	
Duplex Scan		No	Yes
TWAIN Compliant	**Windows®**	Windows® XP [1] / Windows Vista® / Windows® 7 / Windows® 8 / Windows® 8.1 / Windows® 10	
	Macintosh	Mac OS X 10.6.x, 10.7.x, 10.8.x, 10.9.x, 10.10.x, 10.11.x [2]	
Colour Depth	**Input**	48 bit colour processing	
	Output	24 bit colour processing	
Resolution	**Optical**	Up to 600 × 600 dpi	
	Interpolated	1200 dpi	
Scanning Width		Up to 216 mm	
Greyscale	**Input**	16 bit	
	Output	8 bit	
Scanning Max. Speed		Mono 8.0 ppm (7.5 seconds (Letter) up to 300 dpi) 7.5 ppm (8 seconds (A4) up to 300 dpi) 4.3 ppm (14.1 seconds (Letter) above 400 dpi) 4 ppm (15 seconds (A4) above 400 dpi) Colour 8.0 ppm (7.5 seconds (Letter) up to 300 dpi) 7.5 ppm (8 seconds (A4) up to 300 dpi) 4.3 ppm (14.1 seconds (Letter) above 400 dpi) 4 ppm (15 seconds (A4) above 400 dpi)	
Duplex Scanning Max. Speed		-	Mono 5.3 ppm (11.3 seconds (Letter) up to 300 dpi) 5 ppm (12 seconds (A4) up to 300 dpi) 3 ppm (19.8 seconds (Letter) above 400 dpi) 2.9 ppm (21 seconds (A4) above 400 dpi) Color 5.3 ppm (11.3 seconds (Letter) up to 300 dpi) 5 ppm (12 seconds (A4) up to 300 dpi) 3 ppm (19.8 seconds (Letter) above 400 dpi) 2.9 ppm (21 seconds (A4) above 400 dpi)

[1] Windows® XP in this User's Guide includes Windows® XP Home Edition and Windows® XP Professional.

[2] For the latest driver updates for the version of Mac OS X you are using, visit us at support.brother.com

Interfaces

USB	Hi-Speed USB 2.0 [1, 2] Use a USB 2.0 cable (Type A / B) that is no more than 1.2 metres long.

[1] Your scanner has a Hi-Speed USB 2.0 interface. The scanner can also be connected to a computer that has a USB 1.1 interface.

[2] Third party USB ports are not supported.

Computer requirements

SUPPORTED OPERATING SYSTEMS AND SOFTWARE FUNCTIONS							
Computer Platform & Operating System Version		**Processor Minimum Speed**	**Minimum RAM**	**Recommended RAM**	**Hard Disk Space to install**		**Supported PC Interface**
					For Drivers	**For Applications**	
Windows® Operating System	Windows® XP Home Windows® XP Professional	Intel® Core™ 2 Duo or equivalent	1 GB	2 GB	80 MB	1.2 GB	USB
	Windows® XP Professional x64 Edition	64-bit (Intel® 64 or AMD64) supported CPU	1 GB	2 GB			
	Windows Vista®	Intel® Core™ 2 Duo or equivalent 64-bit (Intel® 64 or AMD64) supported CPU	1 GB	2 GB	80 MB	1.2 GB	
	Windows® 7	Intel® Core™ 2 Duo or equivalent 64-bit (Intel® 64 or AMD64) supported CPU	1 GB (32-bit) 2 GB (64-bit)	2 GB (32-bit) 4 GB (64-bit)	80 MB	1.2 GB	
	Windows® 8	Intel® Core™ i3 or equivalent 64-bit (Intel® 64 or AMD64) supported CPU	1 GB (32-bit) 2 GB (64-bit)	2 GB (32-bit) 4 GB (64-bit)	80 MB	1.2 GB	
	Windows® 8.1	Intel® Core™ i3 or equivalent 64-bit (Intel® 64 or AMD64) supported CPU	1 GB (32-bit) 2 GB (64-bit)	2 GB (32-bit) 4 GB (64-bit)	80 MB	1.2 GB	
	Windows® 10	Intel® Core™ i3 or equivalent 64-bit (Intel® 64 or AMD64) supported CPU	1 GB (32-bit) 2 GB (64-bit)	2 GB (32-bit) 4 GB (64-bit)	80 MB	1.2 GB	

Macintosh Operating System	Mac OS X 10.6.x	Intel® Processor	1 GB	2 GB	80 MB	400 MB	USB
	Mac OS X 10.7.x	Intel® Processor	1 GB	2 GB			
	Mac OS X 10.8.x	Intel® Processor	2 GB	4 GB			
	Mac OS X 10.9.x	Intel® Processor	2 GB	4 GB			
	Mac OS X 10.10.x	Intel® Processor	2 GB	4 GB			
	Mac OS X 10.11.x	Intel® Processor	2 GB	4 GB			

For the latest driver updates, visit support.brother.com

All trademarks, brand and product names are property of their respective companies.

B Appendix B

Contacting Brother

IMPORTANT

For technical help, contact the Customer Service center in the country where you bought the scanner. For more information, see *For customer service* on page 55. Calls must be made ***from within*** that country.

Register your product

By registering your product with Brother International Corporation, you will be recorded as the original owner of the product. Your registration with Brother:

- may serve as confirmation of the purchase date of your product should you lose your receipt
- may support an insurance claim by you in the event of product loss covered by insurance
- will help us notify you of enhancements to your product and special offers

Complete and fax the Brother Warranty Registration And Test Sheet or, for your convenience and most efficient way to register your new product, register online at

www.brother.com/registration

Frequently asked questions (FAQs)

The Brother Solutions Center is our one-stop resource for all your Brother machine needs. You can download the latest software documents and utilities, read FAQs and troubleshooting tips, and learn how to get the most from your Brother product.

support.brother.com

You can check the Brother Solutions Center for Brother driver updates.

To keep your machine performance up to date, check the Brother Solutions Center for the latest firmware upgrade.

For customer service

For Australia Only:

Support - For technical support of your Brother Product other than what you can resolve through the User's Guide, please visit our Web Site or Solutions Web Site (see below) to find an answer to FAQs/Troubleshooting, locating Drivers & Software.

Alternatively, please contact the Product Support Centre for any customer care/technical support enquiry.

To contact Brother International (Aust) Pty Ltd for support on a Brother product please see the details listed below:

Product Support Centre:	**Australia**
Brother International (Aust) Pty Ltd	
Phone:	02 8875 6000
Fax:	02 9870 7223
Solutions Site:	support.brother.com
Web Site:	www.brother.com.au
E-mail:	To submit an e-mail enquiry, visit www.brother.com.au go to Service and Support area and follow the prompts.

Our Technical Support Consultants are available 5 days a week by phone during the hours of 8.30am to 5.00pm (EST/EDST) Monday to Friday.

For New Zealand Only:

To contact Brother International (NZ) Limited for support with a Brother product please use the following methods.

Phone:	
Premium End User Assistance	0900 552 152
Auto Attendant Self Help	0800 652 152
Brother Recycle Assistance	0800 632 467
Fax Assistance	0800 837 822
Email Assistance	Please visit www.brother.co.nz and submit a helpdesk enquiry from Online Help
Web Assistance	Please visit www.brother.co.nz under Online Help for Frequently Asked Questions, Driver downloads, Warranty information and Service Centres

Our Technical Support Consultants are available 7 days a week by phone during the hours of 8.30am to 5pm Monday to Friday and 9am to 5pm Saturday and Sunday. Outside of these hours you can find assistance from our Auto Attendant Self Help and our Website www.brother.co.nz under Online Help.

Technical support (For PageManager® and BizCard®)

Taiwan

Tel:	+886-2-8751-8200
Fax:	+886-2-8751-2880
E-mail:	contactus@newsoft.com.tw

All other locations

E-mail:	tech@newsoft.eu.com (English only)