Brother Laser Printer

USER'S GUIDE

HL-4150CDN
HL-4570CDW

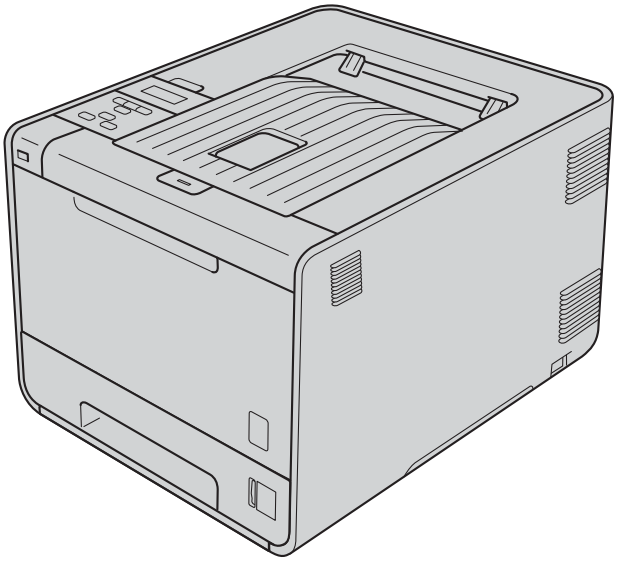

For visually-impaired users

You can read this manual with Screen Reader 'text-to-speech' software.

You must set up the hardware and install the driver before you can use the machine.

Please use the Quick Setup Guide to set up the machine. You can find a printed copy in the box.

Please read this User's Guide thoroughly before you use the machine.

Please visit us at http://solutions.brother.com/ where you can get product support, the latest driver updates and utilities, and answers to frequently asked questions (FAQs) and technical questions.

Note: Not all models are available in all countries.

Version A

ARL/ASA/NZ/SAF/GLF

Using this guide

Symbols used in this guide

The following symbols and conventions are used throughout the documentation.

⚠ WARNING	WARNING indicates a potentially hazardous situation which, if not avoided, could result in death or serious injuries.
⚠ CAUTION	CAUTION indicates a potentially hazardous situation which, if not avoided, may result in minor or moderate injuries.
❗ IMPORTANT	IMPORTANT indicates a potentially hazardous situation which, if not avoided, may result in damage to property or loss of product functionality.
⚠	Hot Surface icons warn you not to touch machine parts that are hot.
Note	Notes tell you how you should respond to a situation that may arise or give tips about how the operation works with other features.

Table of Contents

1 Printing Methods 1

About this Machine 1
Front view and Back view 1
Acceptable paper and other print media 2
Type and size of paper 2
Handling and using special paper 5
Unprintable area 8
Printing methods 9
Printing on plain paper 9
Printing on envelopes and thick paper 15
Duplex printing 19
Guidelines for printing on both sides of the paper 19
Automatic duplex printing 20
Manual duplex printing 22
Printing data from a USB flash memory drive with direct print 23
Supported file formats 23
Direct Print default settings 23
Creating a PRN or PostScript® 3™ file for direct printing 24
Printing data directly from the USB flash memory drive 25

2 Driver and Software 27

Printer driver 27
Features in the printer driver (for Windows®) 29
Using the BR-Script3 printer driver (PostScript® 3™ language emulation for Windows®) 43
Features in the printer driver (for Macintosh) 50
Uninstalling the printer driver 62
Printer driver for Windows® 62
Printer driver for Macintosh 62
Software 62
Software for networks 62

3 Control Panel 63

Control panel 63
Buttons 64
Go 64
Cancel 65
Secure 65
+ or - button 65
Back 65
OK 65

LEDs 66
LCD 67
Back light 67
LCD messages 67
Reprinting documents 69
Printing Secure data 70
Menu table 71
Default settings 82
Colour Calibration 83
Auto Registration 83
Manual Registration 84
Frequency 84

4 Option 85

Lower tray (LT-300CL) 85
SO-DIMM 86
SO-DIMM types 86
Installing extra memory 87

5 Routine Maintenance 89

Replacing consumable items 89
Before replacing the consumable items 93
Toner cartridges 96
Drum unit 101
Belt unit 106
Waste toner box 110
Cleaning 115
Cleaning the outside of the machine 115
Cleaning the inside of the machine 117
Cleaning the corona wires 121
Cleaning the drum unit 125
Cleaning the paper pick-up roller 131
Shipment of the machine 132

6 Troubleshooting 140

Identifying your problem 140
LCD messages 141
Paper handling 145
Paper jams and how to clear them 146
Jam MP Tray (paper jam in the MP tray) 147
Jam Tray 1 / Jam Tray 2 (Paper jam inside the paper tray) 147
Jam Duplex (paper jam underneath the standard paper tray (tray 1) or in the fuser unit) 150
Jam Rear (Paper jam behind the back cover) 153
Jam Inside (Paper jam inside the machine) 156
Improving the print quality 160
Solving print problems 166
Network problems 166
Other problems 167
For Macintosh with USB 167
BR-Script 3 167

A Appendix 168

Machine specifications....168
Engine....168
Controller....169
Software....170
Direct Print feature....171
Control panel....171
Paper handling....171
Media specifications....172
Supplies....173
Dimensions / weights....174
Other....174
Computer requirements....175
Important information for choosing your paper....176
Symbol and character sets....179
How to use Web Based Management (Web browser)....179
Symbol and character sets list....180
Quick reference for bar code control commands....181
Print bar codes or expanded characters....181

B Appendix (for Europe and Other Countries) 189

Brother numbers....189

C Appendix (for USA and Canada) 190

Brother numbers....190

D Index 193

1 Printing Methods

About this Machine

Front view and Back view

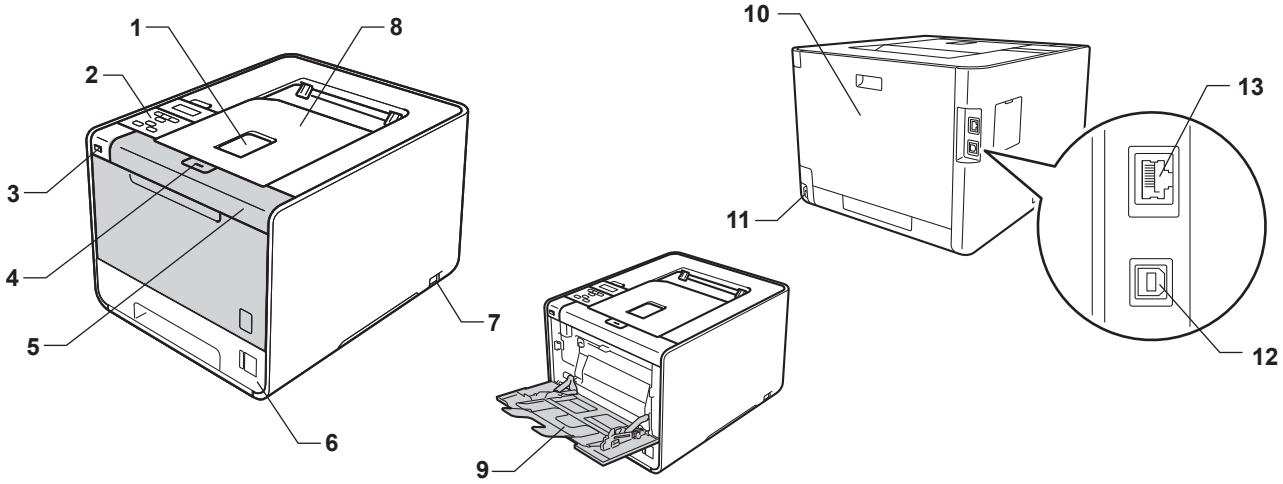

1 Face-down output tray support flap (support flap)
2 Control panel with a tiltable Liquid Crystal Display (LCD)
3 USB direct print interface
4 Front cover release button
5 Front cover
6 Paper tray
7 Power switch
8 Face-down output tray
9 Multi-purpose tray (MP tray)
10 Back cover (Face-up output tray when open)
11 AC power connector
12 USB connector
13 10BASE-T/100BASE-TX port

Acceptable paper and other print media

Print quality may vary according to the type of paper you are using.

You can use the following types of print media: thin paper, plain paper, thick paper, bond paper, recycled paper, glossy paper, labels or envelopes.

For best results, follow the instructions below:

- DO NOT put different types of paper in the paper tray at the same time because it may cause paper jams or misfeeds.
- For proper printing, you must choose the same paper size from your software application as the paper in the tray.
- Avoid touching the printed surface of the paper immediately after printing.
- Before you buy a lot of paper, test a small quantity to make sure that the paper is suitable.

Type and size of paper

The machine feeds paper from the installed paper trays.

The names for the paper trays in the printer driver and this guide are as follows:

Paper tray	Tray 1
Optional lower tray unit	Tray 2
Multi-purpose tray	MP Tray
Duplex unit for automatic duplex printing	DX

When looking at this page, you can jump to the page for each printing method by clicking ⓘ in the table.

Media type	Tray 1	Tray 2	MP Tray	DX	Choose the media type from the printer driver
Plain paper 75 g/m^2 to 105 g/m^2 (20 to 28 lb)	ⓘ	ⓘ	ⓘ	ⓘ	**Plain Paper**
Recycled paper	ⓘ	ⓘ	ⓘ	ⓘ	**Recycled Paper**
Bond paper Rough paper– 60 g/m^2 to 163 g/m^2 (16 to 43 lb)			ⓘ 60 g/m^2 to 163 g/m^2 (16 to 43 lb)		**Bond Paper**
Thin paper 60 g/m^2 to 75 g/m^2 (16 to 20 lb)	ⓘ	ⓘ	ⓘ	ⓘ	**Thin Paper**
Thick paper 105 g/m^2 to 163 g/m^2 (28 to 43 lb)			ⓘ		**Thick Paper** or **Thicker Paper**
Labels			ⓘ A4 or Letter		**Label**
Envelopes			ⓘ		**Envelopes** **Env. Thin** **Env. Thick**
Glossy paper			ⓘ	ⓘ	**Glossy Paper**

	Tray 1	Tray 2	MP Tray	DX
Paper size	A4, Letter, Legal, B5 (ISO/JIS), Executive, A5, A5 (Long Edge), A6, B6 (ISO), Folio	A4, Letter, Legal, B5 (ISO/JIS), Executive, A5, B6 (ISO), Folio	Width: 69.8 to 216 mm (2.75 to 8.5 in.) Length: 116 to 406.4 mm (4.57 to 16 in.)	A4
Number of sheets (80 g/m^2 / 20 lb)	250 sheets	500 sheets	50 sheets	

Recommended paper specifications

The following paper specifications are suitable for this machine.

Basis weight	75-90 g/m^2 (20-24 lb)
Thickness	80-110 µm
Roughness	Higher than 20 sec.
Stiffness	90-150 cm^3/100
Grain direction	Long grain
Volume resistivity	10e^9-10e^{11} ohm
Surface resistivity	10e^9-10e^{12} ohm-cm
Filler	$CaCO_3$ (Neutral)
Ash content	Below 23 wt%
Brightness	Higher than 80%
Opacity	Higher than 85%

- Use paper that is made for plain-paper copying.
- Use paper that is 75 to 90 g/m^2 (20 to 24 lb).
- Use long grain paper with a neutral Ph value, and a moisture content of approx. 5%.
- This machine can use recycled paper that meets DIN 19309 specifications.

(To help you choose which paper to use with this machine, see *Important information for choosing your paper* on page 176.)

Handling and using special paper

The machine is designed to work well with most types of xerographic and bond paper. However, some paper variables may have an effect on print quality or handling reliability. Always test samples of paper before purchasing to ensure desirable performance. Store paper in its original packaging and keep it sealed. Keep the paper flat and away from moisture, direct sunlight and heat.

Some important guidelines when selecting paper are:

- DO NOT use inkjet paper because it may cause a paper jam or damage your machine.
- Preprinted paper must use ink that can withstand the temperature of the machine's fusing process 200 degrees centigrade (392 degrees Fahrenheit).
- If you use bond paper, paper having a rough surface or paper that is wrinkled or creased, the paper may exhibit degraded performance.
- When you are using glossy paper, put only one sheet at a time in the MP tray to avoid a paper jam.

Types of paper to avoid

IMPORTANT

Some types of paper may not perform well or may cause damage to your machine.

DO NOT use paper:

- that is highly textured
- that is extremely smooth or shiny
- that is curled or warped

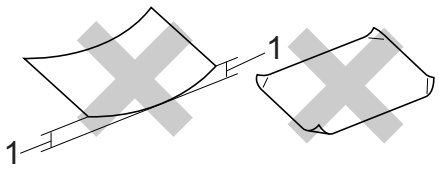

1 A curl of 2 mm (0.08 in.) or greater may cause jams to occur.

- that is coated or has a chemical finish
- that is damaged, creased or folded
- that exceeds the recommended weight specification in this guide
- with tabs and staples
- with letterheads using low temperature dyes or thermography
- that is multipart or carbonless
- that is designed for inkjet printing

If you use any of the types of paper listed above, they may damage your machine. This damage is not covered under any Brother warranty or service agreement.

Envelopes

Most envelopes designed for laser printers will be suitable for your machine. However, some envelopes may have feed and print-quality problems because of the way they have been made. A suitable envelope should have edges with straight, well-creased folds and the leading edge should not be thicker than two sheets of paper. The envelope should lie flat and not be of baggy or flimsy construction. You should buy quality envelopes from a supplier who understands that you will be using the envelopes in a laser machine.

We recommend that you print a test envelope to make sure the print results are what you want.

Types of envelopes to avoid

IMPORTANT

DO NOT use envelopes:

- that are damaged, curled, wrinkled, irregularly shaped, extremely shiny or textured envelopes.
- with clasps, staples, snaps, tie strings, self-adhesive components, windows, holes, cutouts or perforations.
- that are of a baggy construction, not sharply creased, embossed (have raised writing on them) or pre-printed on the inside.
- that were previously printed by a laser / LED printer.
- that cannot be arranged when put in a pile.
- that are made of paper that weighs more than the paper weight specifications for the machine.
- with edges that are not straight or consistently square.
- with glue on surface as shown in figure below

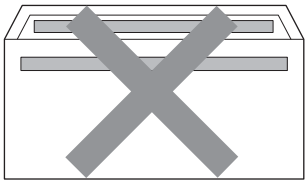

- with double flaps as shown in figure below

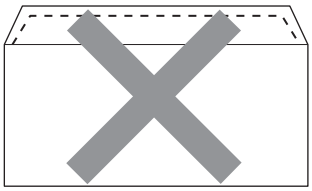

- with sealing flaps that are not folded down when purchased
- with sealing flaps as shown in figure below

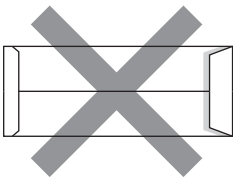

- with each side folded as shown in figure below

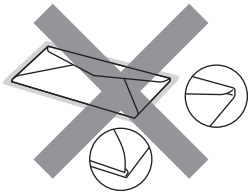

If you use any of the types of envelopes listed above, they may damage your machine. This damage may not be covered under any Brother warranty or service agreement.

Labels

The machine will print on most types of labels designed for use with a laser machine. Labels should have an adhesive that is acrylic-based since this material is more stable at the high temperatures in the fuser unit. Adhesives should not come in contact with any part of the machine, because the label stock may stick to the drum unit or rollers and cause jams and print quality problems. No adhesive should be exposed between the labels. Labels should be arranged so that they cover the entire length and width of the sheet. Using labels with spaces may result in labels peeling off and causing serious jams or print problems.

All labels used in this machine must be able to withstand a temperature of 200 degrees centigrade (392 degrees Fahrenheit) for a period of 0.1 seconds.

Types of labels to avoid

Do not use labels that are damaged, curled, wrinkled or an unusual shape.

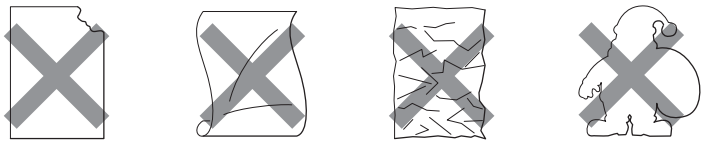

IMPORTANT

- Avoid feeding labels with the carrier sheet exposed because your machine will be damaged.
- Label sheets should not exceed the paper weight specifications described in this User’s Guide. Labels exceeding this specification may not feed or print properly and may cause damage to your machine.
- DO NOT reuse or insert labels that have previously been used or is missing few labels on the sheet.

Unprintable area

The area of the paper that cannot be printed on is shown in the table below:

Note

The area that cannot be printed on may vary depending on the paper size and the printer driver you are using. The unprintable area shown below is for A4 / Letter size paper.

Portrait

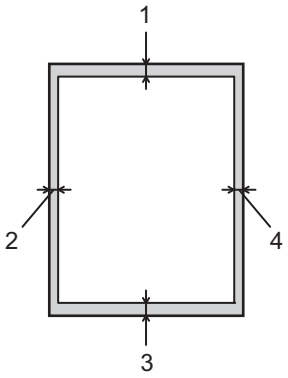

Landscape

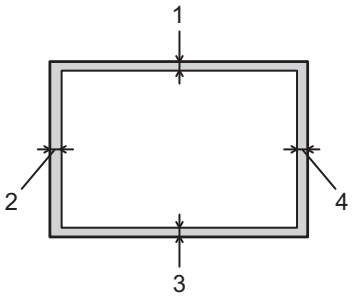

	Windows® Printer Driver and Macintosh printer driver **BRScript Printer Driver for Windows® and Macintosh**
1	4.23 mm (0.16 in.)
2	4.23 mm (0.16 in.)
3	4.23 mm (0.16 in.)
4	4.23 mm (0.16 in.)

Printing methods

Printing on plain paper

Printing on plain paper from the Tray 1 and Tray 2

(For the recommended paper to use, see *Type and size of paper* on page 2.)

1. Pull the paper tray completely out of the machine.

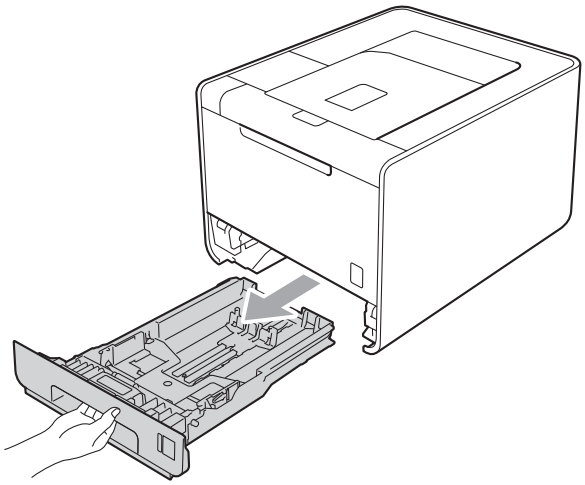

WARNING

DO NOT touch the shaded parts shown in the illustration. These rollers may be rotating at high speed.

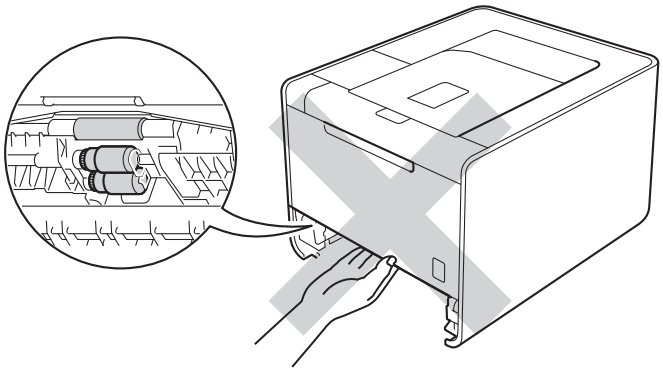

2 While pressing the green paper-guide release lever, slide the paper guides to fit the paper size. Make sure that the guides are firmly in the slots.

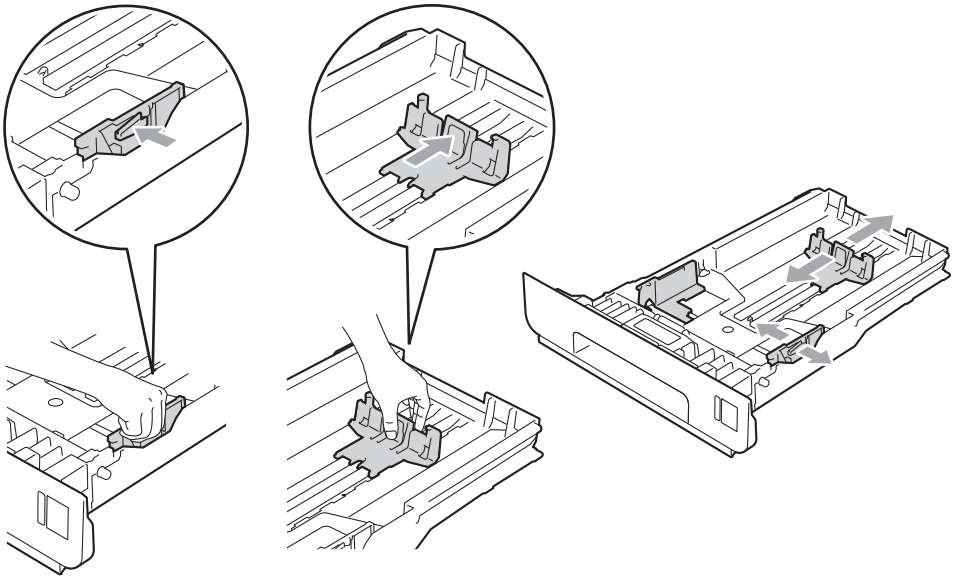

3 Put paper in the tray and make sure:

- The paper is below the maximum paper mark (▼▼▼) (1).

  Over filling the paper tray will cause paper jams.
- The side to be printed on must be face down.
- The paper guides touch the sides of the paper so it will feed properly.

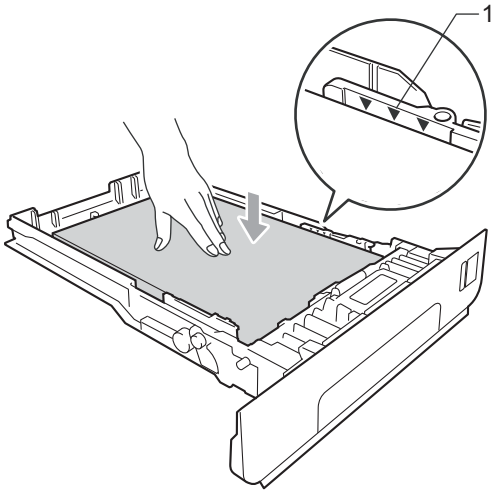

4 Put the paper tray firmly back in the machine. Make sure that it is completely inserted into the machine.

5 Lift up the support flap to prevent paper from sliding off the face-down output tray, or remove each page as soon as it comes out of the machine.

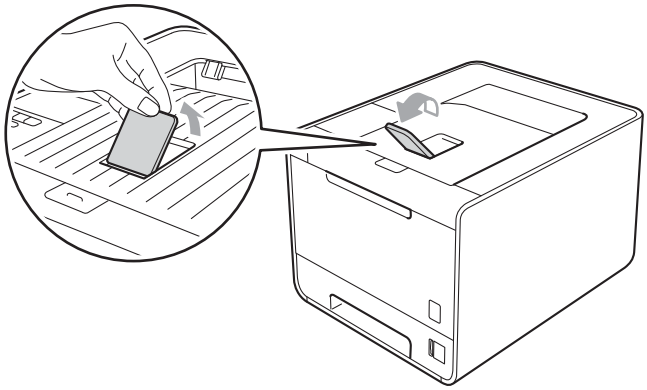

6 Choose the following settings from each drop-down list of the printer driver.

■ **Paper Size**

A4	**Letter**	**Legal**	**Executive**	**A5**
B5	**B6**	**Folio**	**JIS B5**	**A5 Long Edge** (Tray 1 only)
A6 (Tray 1 only)				

For the acceptable paper sizes, see *Type and size of paper* on page 2.

■ **Media Type**

Plain Paper	**Thin Paper**	**Recycled Paper**

■ **Paper Source**

Tray1	**Tray2** (if available)

For any other settings, see *Driver and Software* in Chapter 2.

7 Send the print data to the machine.

Printing on plain paper, bond paper, labels or glossy paper from the MP tray

(For the recommended paper to use, see *Type and size of paper* on page 2.)

1. Open the MP tray and lower it gently.

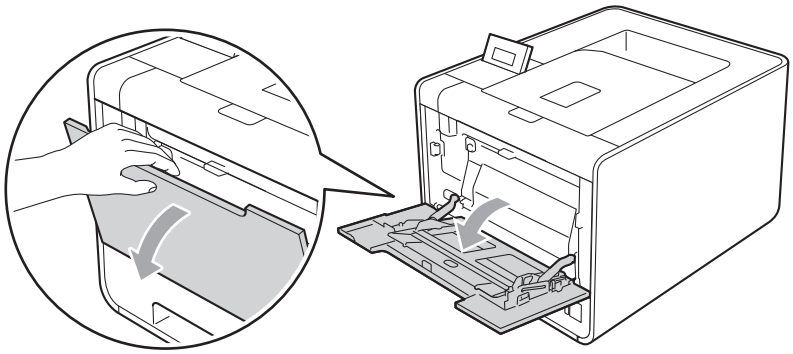

2. Pull out the MP tray support and unfold the flap (1).

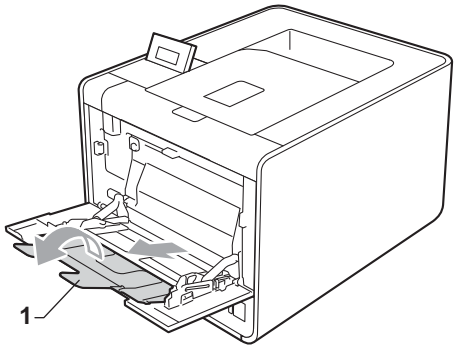

3. Lift up the support flap to prevent paper from sliding off the face-down output tray, or remove each page as soon as it comes out of the machine.

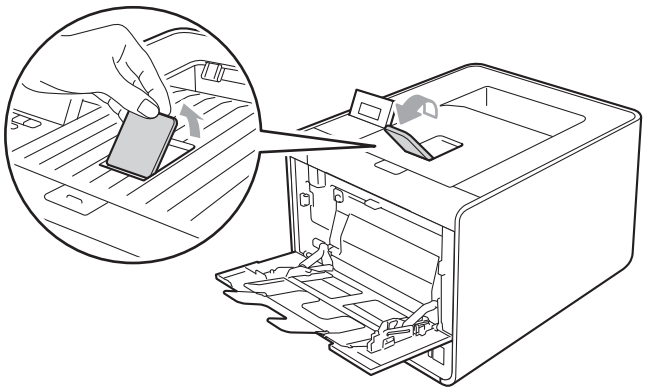

4 Put paper in the MP tray and make sure:

- The paper stays under the maximum paper mark (1).
- The paper edge positions between the arrows (2).
- The side to be printed on must be face up with the leading edge (top of the paper) in first.

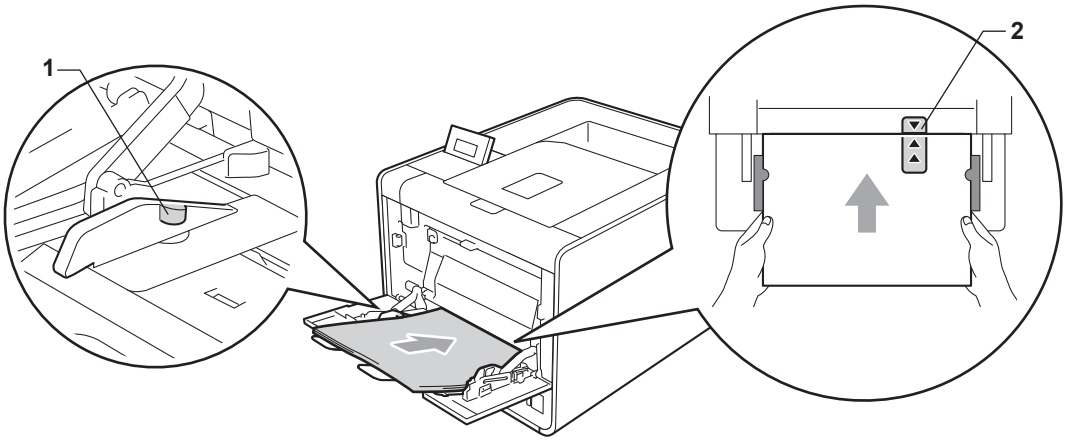

Note

When you are using glossy paper, put only one sheet at a time in the MP tray to avoid a paper jam.

5 While pressing the paper-guide release lever, slide the paper guide to fit the paper size.

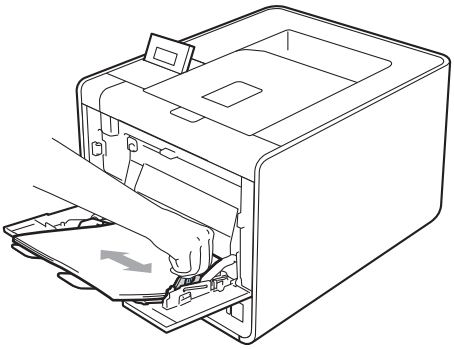

6 Choose the following settings from each drop-down list of the printer driver.

- **Paper Size**

A4	**Letter**	**Legal**	**Executive**	**A5**
A5 Long Edge	**A6**	**B5**	**B6**	**3 x 5**
JIS B5	**Folio**	Customized paper size [1]		

[1] You can define your original paper size by choosing **User Defined...** in Windows® printer driver, **PostScript Custom Page Size** in BR-Script printer driver for Windows®, or **Custom Page Sizes** in Macintosh printer drivers.

For the acceptable paper sizes, see *Type and size of paper* on page 2 and *Paper size* on page 178.

■ **Media Type**

Plain Paper **Thin Paper** **Recycled Paper** **Bond Paper** **Label**
Glossy Paper

■ **Paper Source**

MP Tray

For any other settings, see *Driver and Software* in Chapter 2.

7 Send the print data to the machine.

Printing on envelopes and thick paper

(For the recommended paper to use, see *Type and size of paper* on page 2.)

1. Open the MP tray and lower it gently.

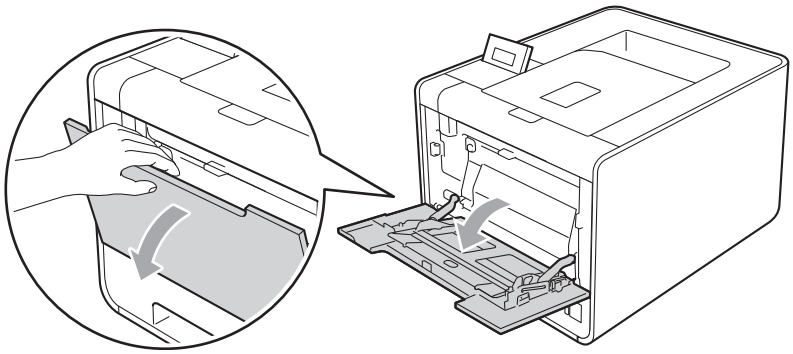

2. Pull out the MP tray support and unfold the flap (1).

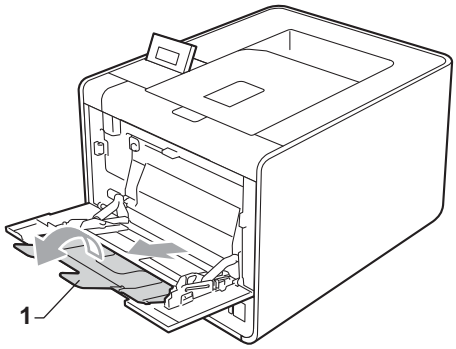

3. Lift up the support flap to prevent envelopes or thick sheets of paper from sliding off the face-down output tray. If the support flap is closed you should remove each envelope as soon as it comes out of the machine.

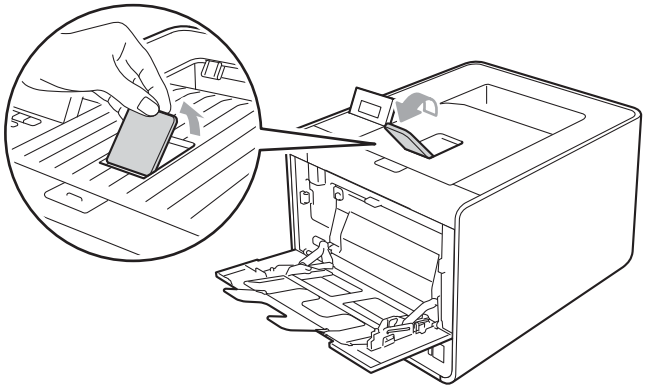

4 Put up to 3 envelopes or up to 25 sheets of thick paper (163 g/m^2 / 43 lb paper) in the MP tray. If you add more envelopes or paper it may cause a jam. Make sure:

- The top of envelope edge is positioned between the arrows (1).
- The side to be printed on must be face up.

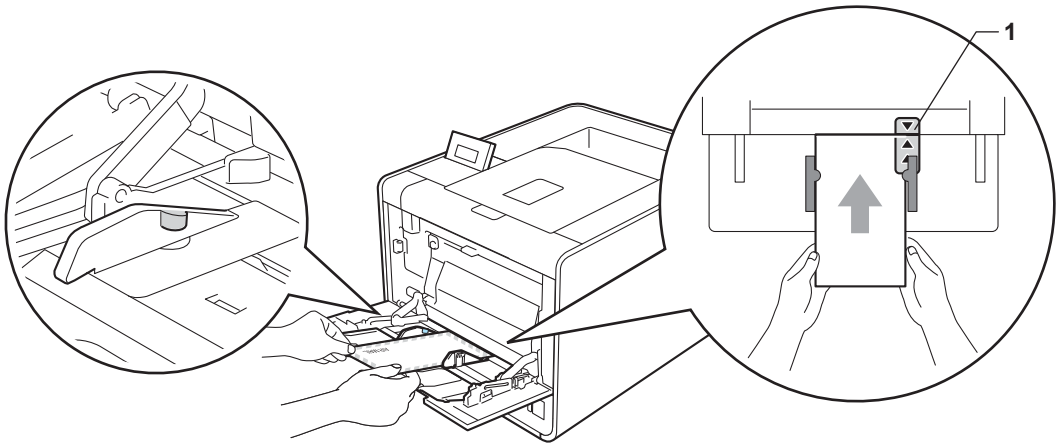

5 Open the back cover (face-up output tray).

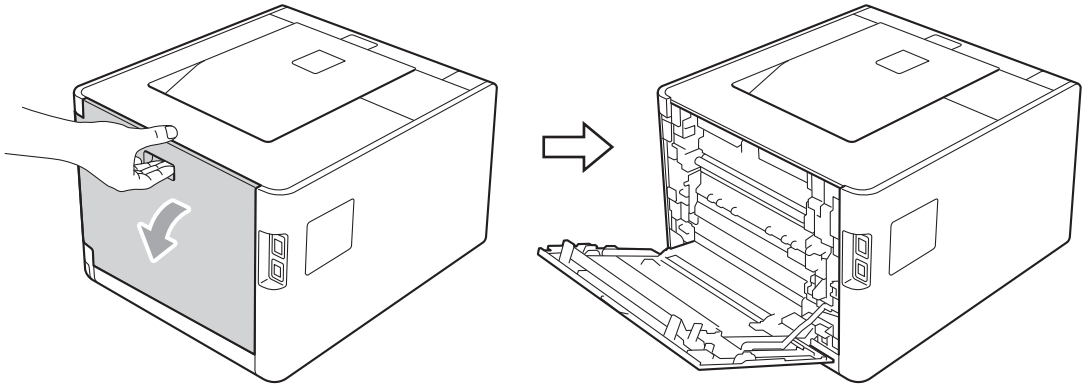

6 Pull down the two grey levers, one on the left-hand side and one on the right-hand side, to the envelope position as shown in the illustration below.

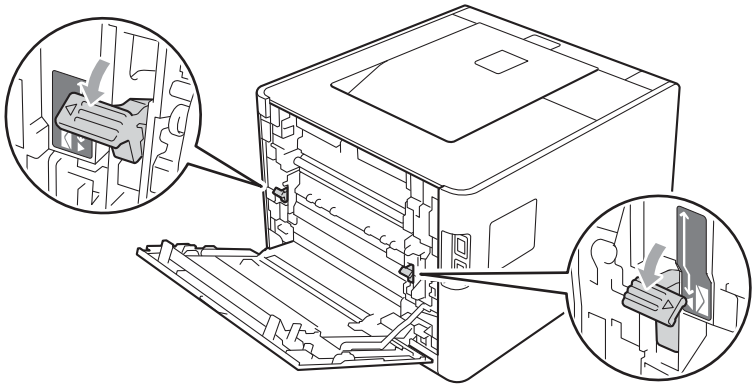

7 Close the back cover.

8 Choose the following settings from each drop-down list of the printer driver.

■ **Paper Size**

<For printing envelopes>

Com-10	**DL**	**C5**	**Monarch**	**DL Long Edge**
Customized paper size [1]				

<For printing thick paper>

A4	**Letter**	**Legal**	**Executive**	**A5**
A5 Long Edge	**A6**	**B5**	**B6**	**3 x 5**
JIS B5	**Folio**	Customized paper size [1]		

[1] You can define your original paper size by choosing **User Defined...** in Windows® printer driver, **PostScript Custom Page Size** in BR-Script printer driver for Windows®, or **Custom Page Sizes** in Macintosh printer drivers.

For the acceptable paper sizes, see *Type and size of paper* on page 2 and *Paper size* on page 178.

■ **Media Type**

<For printing envelopes>

Envelopes	**Env. Thin**	**Env. Thick**

<For printing thick paper>

Thick Paper	**Thicker Paper**

■ **Paper Source**

MP Tray

For any other settings, see *Driver and Software* in Chapter 2.

Note

- When you use Envelope #10, choose **Com-10** for the **Paper Size**.
- For other envelopes that are not listed in the printer driver, such as Envelope #9 or Envelope C6, choose **User Defined...** (for Windows® printer driver), **PostScript Custom Page Size** (for BR-Script printer driver for Windows®) or **Custom Page Sizes** (for Macintosh printer driver). For more information on envelope sizes, see *Paper size* on page 178.

9 Send the print data to the machine.

10 When you have finished printing, open the back cover and reset the two grey levers their original position.

Note

- Remove each envelope as soon as it has been printed. Stacking the envelopes may cause them to jam or curl.
- If envelopes or thick paper gets smudged during printing set the **Media Type** to **Env. Thick** or **Thicker Paper** to increase the fixing temperature.
- If the envelopes are creased after they are printed, see *Improving the print quality* on page 160.
- If your thick paper curls during printing, put only one sheet at a time in the MP tray and open the back cover (back output tray) to let the printed pages exit to the back output tray.
- (For Windows® users) If DL size double flap envelopes are creased after printing, choose **DL Long Edge** in **Paper Size**, from the **Basic** tab. Put a new DL size double-flap envelope in the MP tray with the longest edge of the envelope in first, then print again.
- Envelope joints that are sealed by the manufacturer should be secure.
- All sides of the envelope should be properly folded without wrinkles or creases.

Duplex printing

The supplied printer drivers for Windows® 2000 or greater and Mac OS X 10.4.11 or greater all enable duplex printing. For more information about how to choose the settings, see the **Help** text in the printer driver.

Guidelines for printing on both sides of the paper

- If the paper is thin, it may wrinkle.
- If paper is curled, straighten it and put it back in the paper tray. If the paper continues to curl, replace the paper.
- If the paper is not feeding properly, it may be curled. Remove the paper and straighten it. If the paper continues to curl, replace the paper.
- When you use the manual duplex function, it is possible that there may be paper jams or poor print quality. (If there is a paper jam, see *Paper jams and how to clear them* on page 146. If you have a print quality problem, see *Improving the print quality* on page 160.)

Note

Make sure that the paper tray is completely inserted in the machine.

Automatic duplex printing

If you are using the Macintosh Printer Driver, see *Automatic Duplex Printing* on page 59.

Automatic duplex printing with the Windows® printer driver

1. Choose the following settings from each menu of the printer driver.

   ■ **Paper Size**

   A4

   ■ **Media Type**

Plain Paper	**Recycled Paper**	**Thin Paper**	**Glossy Paper** (MP Tray only)

   ■ **Paper Source**

Tray 1	**MP Tray**	**Tray 2** (if available)

   ■ **Duplex / Booklet**

   Duplex

   ■ **Duplex Type** in **Duplex Settings**

   There are four options for each orientation. (See *Duplex / Booklet* on page 33.)

   ■ **Binding Offset** in **Duplex Settings**

   You can specify the offset for binding. (See *Duplex / Booklet* on page 33.)

Note

- You should use plain paper, recycled paper, thin paper or glossy paper. Do not use bond paper.
- When you are using glossy paper, put only one sheet at a time in the MP tray to avoid a paper jam.

For any other settings, see *Driver and Software* in Chapter 2.

2. Send the print data to the machine. The machine will print on both sides of the paper automatically.

Automatic duplex printing with the BR-Script printer driver for Windows®

1. Choose the following settings from each menu of the printer driver.

   ■ **Paper Size**

   A4

   ■ **Media Type**

Plain Paper	**Recycled Paper**	**Thin Paper**	**Glossy Paper** (MP Tray only)

   ■ **Paper Source**

Tray 1	**MP Tray**	**Tray 2** (if available)

   ■ **Print on Both sides**

Flip on Short Edge	**Flip on Long Edge**

   ■ **Page Order**

Front to Back	**Back to Front**

   Note

   - You should use plain paper, recycled paper, thin paper or glossy paper. Do not use bond paper.
   - When you are using glossy paper, put only one sheet at a time in the MP tray to avoid a paper jam.

   For any other settings, see *Driver and Software* in Chapter 2.

2. Send the print data to the machine. The machine will print on both sides of the paper automatically.

Manual duplex printing

The BR-Script printer driver for Windows® does not support manual duplex printing.

If you are using the Macintosh Printer Driver, see *Manual Duplex Printing* on page 58.

Manual duplex printing with the Windows® printer driver

1. Choose the following settings from each drop-down list of the printer driver.

   - **Paper Size**

     You can use all the paper sizes specified for the tray you are using.

   - **Media Type**

     You can use all the media types that are specified for the tray you are using, except envelopes and labels which have only one print side.

   - **Paper Source**

     Tray 1 **MP Tray** **Tray 2** (if available)

   - **Duplex / Booklet**

     Duplex (Manual)

   - **Duplex Type** in **Duplex Settings...**

     There are four options for each orientation. (See *Duplex / Booklet* on page 33.)

   - **Binding Offset** in **Duplex Settings**

     You can specify the offset for binding. (See *Duplex / Booklet* on page 33.)

Note

When you are using glossy paper, put only one sheet at a time in the MP tray to avoid a paper jam.

For any other settings, see *Driver and Software* in Chapter 2.

2. Send the print data to the machine. The machine will print all the even-numbered pages on one side of the paper first. Then, the Windows® driver instructs you (with a pop-up message) to reinsert the paper to print the odd-numbered pages.

Note

Before reinserting the paper, straighten it well, or you may get a paper jam. Very thin or thick paper is not recommended.

Printing data from a USB flash memory drive with direct print

With the Direct Print feature, you do not need a computer to print data. You can print by just plugging your USB flash memory drive into the machine's USB direct interface.

There might be some USB flash memory drives that will not work with the machine.

Supported file formats

Direct print supports the following file formats:

- PDF version 1.7 [1]
- JPEG
- Exif+JPEG
- PRN (created by HL-4150CDN or HL-4570CDW printer driver)
- TIFF (scanned by all MFC or DCP Brother models)
- PostScript® 3™ (created by the BRScript3 printer driver for HL-4150CDN or HL-4570CDW)
- XPS version 1.0

[1] Data including a JBIG2 image file, JPEG2000 image file, or a transparency files is not supported.

Direct Print default settings

You can set the direct Print settings by using the control panel. See *Direct Print* on page 81.

Creating a PRN or PostScript® 3™ file for direct printing

1. From the menu bar of an application, click **File**, then **Print**.
2. Choose your machine model name (1) and check the **Print to file** box (2). Click **Print**.

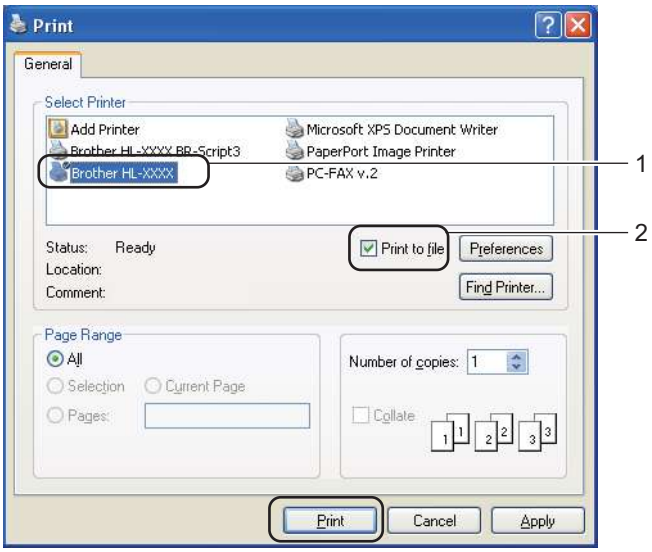

3. Choose the folder you want to save the file to and enter the file name if you are prompted to. If you are prompted for a file name only, you can also specify the folder you want to save the file in by entering the directory name. For example:

   C:\Temp\FileName.prn

   If you have a USB flash memory drive connected to your computer, you can save the file directly to the USB flash memory drive.

Printing data directly from the USB flash memory drive

If you print data from the USB flash memory drive with Secure Function Lock 2.0 enabled, see *Chapter 6* of the *Network User's Guide* for more information about Secure Function Lock 2.0.

1. Connect your USB flash memory drive to the USB Direct Interface (1) on the front of the machine.

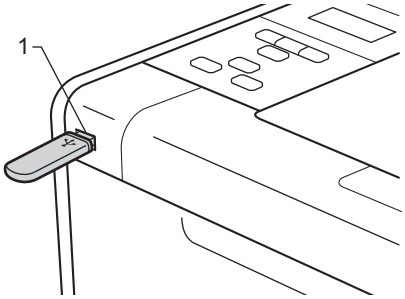

2. <Secure Function Lock enabled> Confirm the LCD shows the following message. Press **OK**.

```
Function Lock
Press OK and sel
```

<Secure Function Lock disabled> Confirm the LCD shows the following message. Then go to Step ❺.

```
Checking Device
```

Note

- When the machine is in the Deep Sleep mode, the LCD does not show any information even if you connect a USB flash memory to the USB direct interface connector. Press **Go** to wake up the machine, and the LCD will show the Direct Print menu.
- If the USB flash memory drive provides a high speed access, it make be difficult to confirm the `Checking Device` message, which may appear for only a few seconds. The time taken to show `Checking Device` on the LCD depends on the communication speed between the machine and the USB flash memory device and the amount of content in the USB memory.

3. Press **+** or **-** to choose ID. Press **OK**. If you chose `Public`, go to Step ❺.

```
Select ID
Public
```

4. Enter the four-digit password. Press **OK**.

```
Select ID
PIN:XXXX
```

Note

If your ID has been restricted, the following messages may appear on the LCD.

Message	Meaning
`Mono Print Only`	Printing colour documents is restricted. You can only print monochrome documents.
`Remaining Pages`	The number of pages you are allowed to print is restricted. The second line of the LCD shows the number of remaining pages you can print.

5 Confirm the LCD shows a folder name or a file name in the USB flash memory drive.

```
Direct Print
1./XXXX.FOLDER1
```

6 Press **+** or **-** to choose the folder name or file name you want to print. Press **OK**.
If you have chosen a folder name, repeat this Step until you reach the file name you want to print.

7 Press **+** or **-** to choose a default printing option and press **OK**,
make the necessary changes to the printing options and press **Go**,
then press **+** or **-** to enter the number of copies you want, then press **Go**.

Printing Default settings

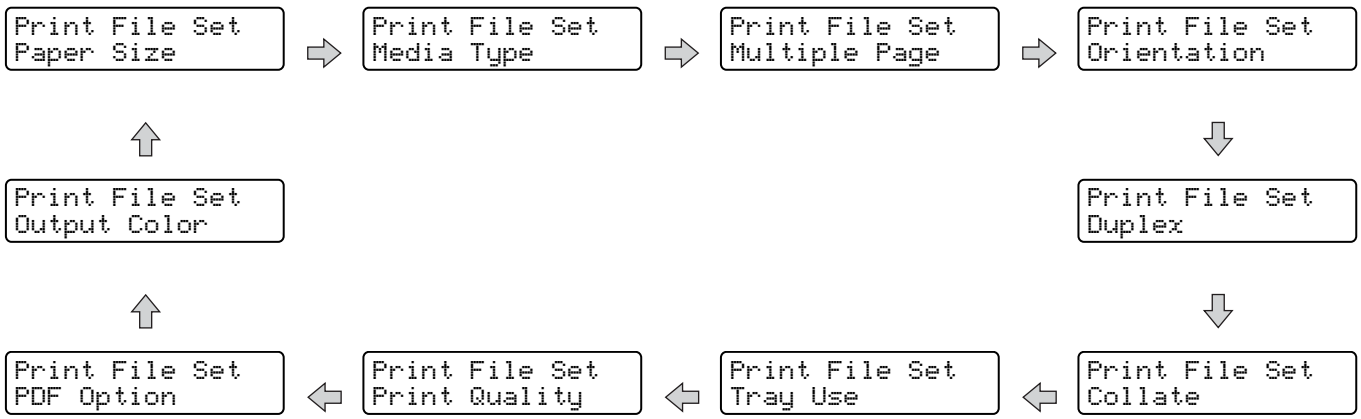

Note

If your ID has been restricted, the following messages may appear on the LCD.

Message	Meaning
Access Denied	Your ID does not allow you to Print documents directly from the USB flash memory drive to the Brother machine.
Limit Exceeded	The number of pages you are allowed to print has been exceeded. The print job will be canceled.
No Permission	Printing colour documents is restricted. The print job will be canceled.
Not Available	Printing documents directly from the USB flash memory drive is restricted.

IMPORTANT

DO NOT remove the USB flash memory drive from the USB direct interface until the machine has finished printing.

2 Driver and Software

Printer driver

A printer driver is software that translates data from the format used by a computer to the format that a particular printer needs. Typically, this format is page description language (PDL).

The printer drivers for the supported versions of Windows® and Macintosh are on the CD-ROM we have supplied or on the Brother Solutions Center at http://solutions.brother.com/. Install the drivers by following the Quick Setup Guide. The latest printer driver can be downloaded from the Brother Solutions Center at http://solutions.brother.com/.

(If you want to uninstall the printer driver, see *Uninstalling the printer driver* on page 62.)

For Windows®

- Windows® printer driver (the most suitable printer driver for this product)
- BR-Script printer driver (PostScript® 3™ language emulation) [1]

[1] Install the driver using the Custom Install from the CD-ROM.

For Macintosh

- Macintosh printer driver (the most suitable printer driver for this product)
- BR-Script printer driver (PostScript® 3™ language emulation) [1]

[1] For the installation instruction of the driver, visit us at http://solutions.brother.com/.

For Linux® [1] [2]

- LPR printer driver
- CUPS printer driver

[1] Download the printer driver for Linux from http://solutions.brother.com/ or a link on the CD-ROM we have supplied.

[2] Depending on Linux distributions, the driver may not be available.

Note

- For more information about Linux printer driver, visit us at http://solutions.brother.com/.
- The printer driver for Linux may be released after the initial release of this product.

You can change the following printer settings when you print from your computer:

- Paper Size
- Orientation
- Copies
- Media Type
- Print Quality
- Colour / Mono
- Multiple Page
- Duplex [4] / Booklet [2 4]
- Paper Source
- Scaling
- Reverse Print
- Use Watermark [1 2]
- Header-Footer Print [1 2]
- Toner Save Mode
- Secure Print
- Administrator [1 2]
- User Authentication [1 2]
- Colour Calibration [1 3]
- Use Reprint [1 3]
- Sleep Time
- Improve Print Output
- Skip Blank Page [1 3]

1 These settings are not available with the BR-script printer driver for Windows®.

2 These settings are not available with the Macintosh printer driver and the BR-Script printer driver for Macintosh.

3 These settings are not available with the BR-Script printer driver for Macintosh.

4 Manual duplex printing / Manual booklet printing are not available with the BR-script printer driver for Windows®.

Features in the printer driver (for Windows®)

(For more information, see the **Help** text in the printer driver.)

Note

- The screens in this section are from Windows® XP. The screens on your computer will vary depending on your operating system.
- You can access the **Printing Preferences** dialog box by clicking **Printing Preferences...** in the **General** tab of the **Printer Properties** dialog box.

Basic tab

You can also change Page Layout settings by clicking the illustration on the left side of the **Basic** tab.

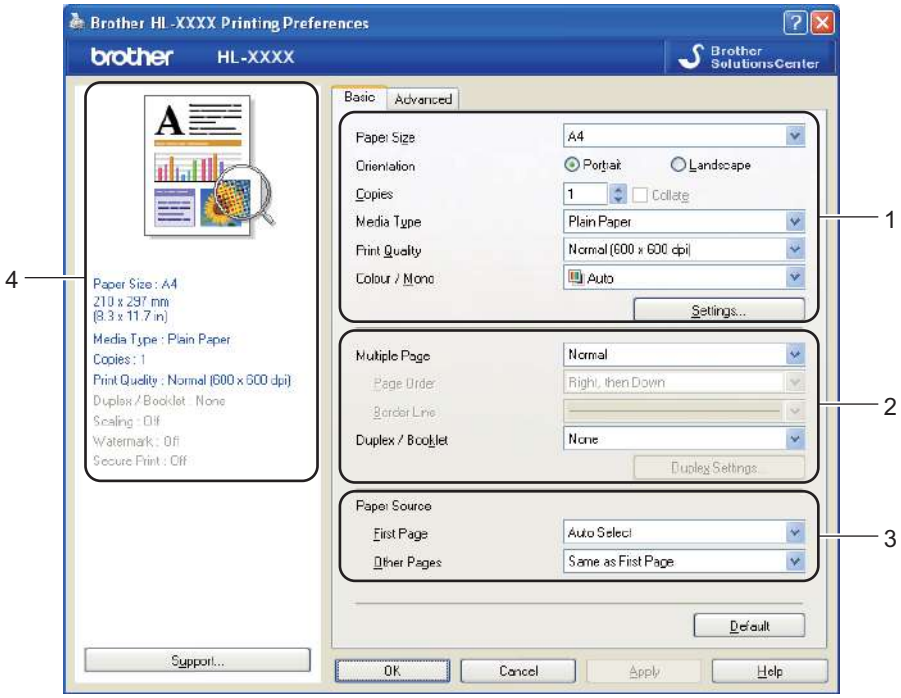

1. Choose the **Paper Size**, **Orientation**, **Copies**, **Media Type**, **Print Quality** and **Colour/Mono** (1).
2. Choose **Multiple Page** and **Duplex / Booklet** (2).
3. Choose the **Paper Source** (3).
4. Click **OK** to apply your chosen settings.
   To return to the default settings, click **Default**, then **OK**.

Note

This area (4) shows the current settings.

Paper Size

From the drop-down list choose the Paper Size you are using.

Orientation

Orientation selects the position of how your document will be printed (**Portrait** or **Landscape**).

Portrait

Landscape

Copies

The copies selection sets the number of copies that will be printed.

■ **Collate**

With the Collate check box selected, one complete copy of your document will be printed and then repeated for the number of copies you selected. If the Collate check box is not selected, then each page will be printed for all the copies selected before the next page of the document is printed.

Collate checked

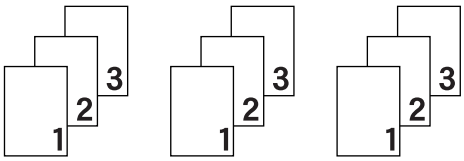

Collate non-checked

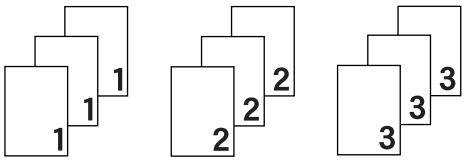

Media Type

You can use the following types of media in your machine. For the best print quality, select the type of media that you wish to use.

Plain Paper	**Thin Paper**	**Thick Paper**	**Thicker Paper**
Bond Paper	**Envelopes**	**Env. Thick**	**Env. Thin**
Recycled Paper	**Label**	**Glossy Paper**	

Note

- When using ordinary plain paper (60 to 105 g/m^2, 16 to 28 lb) choose **Plain Paper**. When using heavier weight paper or rough paper choose **Thick Paper** or **Thicker Paper**. For bond paper, choose **Bond Paper**.
- When you use envelopes, choose **Envelopes**. If the toner is not fixed to the envelope correctly when **Envelopes** has been selected, choose **Env. Thick**. If the envelope is crumpled when **Envelopes** has been selected, choose **Env. Thin**.
- If you are using glossy paper, choose **Glossy Paper**. Put only one sheet at a time in the MP tray to avoid a paper jam.

Print Quality

You can choose the following print quality settings.

- **Normal (600 x 600 dpi)**

  600×600 dpi. Recommended for ordinary printing. Good print quality with reasonable print speeds.

- **Fine (2400 dpi class)**

  2400 dpi class. The finest print mode. Use this mode to print precise images such as photographs. Since the print data is much larger than in normal mode, processing time / data transfer time and printing time will be longer.

Note

The print speed will change depending on what print quality setting you choose. Higher print quality takes longer to print, while lower print quality takes less time to print.

Colour/Mono

You can change the Colour/Mono settings as follows:

- **Auto**

  The machine checks the content of your documents for colour. If colour is detected, it prints in colour. If no colour content is detected, it prints in monochrome. The total printing speed may become slower.

- **Colour**

  When your document contains colour and you want to print it in colour, select this mode.

- **Mono**

  Select this mode if your document has only black and greyscale text and/or objects. If your document contains colour, selecting Mono mode prints your document in 256 levels of grey.

Note

- Sometimes a document can contain colour information even if it appears to be monochrome (for example, grey areas can actually be made from a combination of colours).
- If either the Cyan, Magenta or Yellow toner reaches the end of its life while printing a colour document, the print job cannot be completed. You can choose to start the print job again in **Mono** mode, as long as black toner is available.

Settings Dialog

You can change the following setting by clicking **Settings...** from the **Basic** tab.

- **Colour Mode**

  The following options are available in colour Matching mode:

  - **Normal**

    This is the default colour mode.

  - **Vivid**

    The colour of all elements are adjusted to become a more vivid colour.

  - **Auto**

    The printer driver automatically selects the **Colour Mode** type.

  - **None**

- **Import**

  You can adjust the print configuration of a particular image by clicking **Settings**. When you have finished adjusting the image parameters, such as brightness and contrast, you can import those settings as a print configuration file. Use the **Export** function to create a print configuration file from the current settings.

- **Export**

  You can adjust the print configuration of a particular image by clicking **Settings**. When you have finished adjusting the image parameters, such as brightness and contrast, you can export those settings as a print configuration file. Use the **Import** function to load a previously exported configuration file.

- **Improve Grey Colour**

  You can improve the image quality of a shaded area.

- **Enhance Black Printing**

  If a black graphic cannot be printed correctly, choose this setting.

- **Improve Thin Line**

  You can improve the image quality of thin lines.

- **Improve Pattern Printing**

  Select this option if printed fills and patterns are different from the patterns and fills you see on your computer.

Multiple Page

The Multiple Page selection can reduce the image size of a page allowing multiple pages to be printed on one sheet of paper or enlarging the image size for printing one page on multiple sheets of paper.

- **Page Order**

  When N in 1 option is selected, the page order can be selected from the drop-down list.

- **Border Line**

  When printing multiple pages onto one sheet, with the Multiple Page feature, you can choose to have a solid border, dash border or no border around each page on the sheet.

- **Print cut-out line**

  When 1 in NxN pages option is selected, the **Print cut-out line** option can be selected. This option allows you to print a faint cut-out line around the printable area.

Duplex / Booklet

When you want to print a booklet or do duplex printing, use this function.

- **None**

  Disable duplex printing.

- **Duplex** / **Duplex (Manual)**

  When you want to do duplex printing, use these options.

  - **Duplex**

    The machine prints on both sides of the paper automatically.

  - **Duplex (Manual)**

    The machine prints all the even numbered pages first. Then the printer driver will stop and show the instructions required to re-install the paper. When you click **OK** the odd numbered pages will be printed.

  When you choose **Duplex** or **Duplex (Manual)**, the **Duplex Settings...** button becomes available to choose. You can set following settings in the **Duplex Settings...** dialog box.

- **Duplex Type**

  There are four types of duplex binding direction available for each orientation.

  Portrait

  Long Edge (Left)

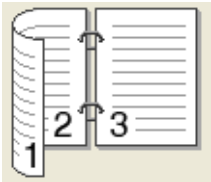

  Long Edge (Right)

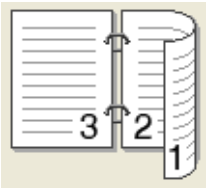

  Short Edge (Top)

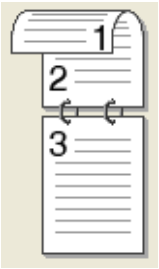

  Short Edge (Bottom)

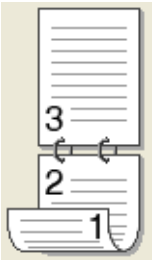

  Landscape

  Long Edge (Top)

  Long Edge (Bottom)

  Short Edge (Right)

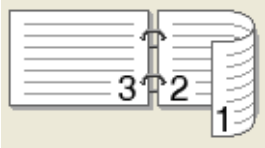

  Short Edge (Left)

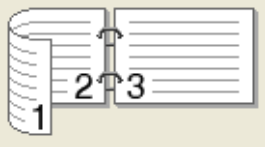

- **Binding Offset**

  When you check **Binding Offset**, you can also specify the offset for binding in inches or millimeters.

■ Booklet / Booklet (Manual)

Use this option to print a document in booklet format using duplex printing; it will arrange the document according to the correct page number and allows you to fold at the center of the print output without having to change the order of the page number.

- **Booklet**

  The machine prints on both sides of the paper automatically.

- **Booklet (Manual)**

  The machine prints all the even numbered sides first. Then the printer driver will stop and show the instructions required to re-install the paper. When you click **OK** the odd numbered sides will be printed.

When you choose **Booklet** or **Booklet (Manual)**, the **Duplex Settings...** button becomes available to choose. You can set following settings in the **Duplex Settings** dialog box.

- **Duplex Type**

  There are two types of duplex binding direction available for each orientation.

Portrait		Landscape	
Left Binding	**Right Binding**	**Top Binding**	**Bottom Binding**
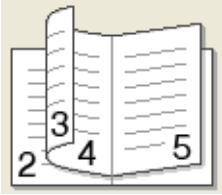	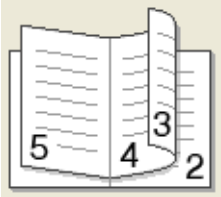	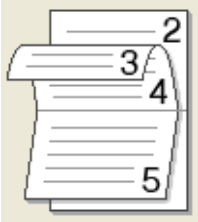	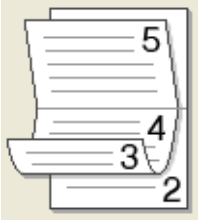

- **Booklet Printing Method**

  When **Divide into Sets** is selected: This option allows you to print the whole booklet into smaller individual booklet sets, it still allows you to fold at the center of the smaller individual booklet sets without having to change the order of the page number. You can specify the number of sheets in each smaller booklet set, from 1 to 15. This option can help when folding the printed booklet that has a large number of pages.

- **Binding Offset**

  When you check **Binding Offset**, you can also specify the offset for binding in inches or millimeters.

Paper Source

You can choose **Auto Select**, **Tray1**, **Tray2**, **MP Tray** or **Manual** and specify separate trays for printing the first page and for printing from the second page onwards.

Advanced tab

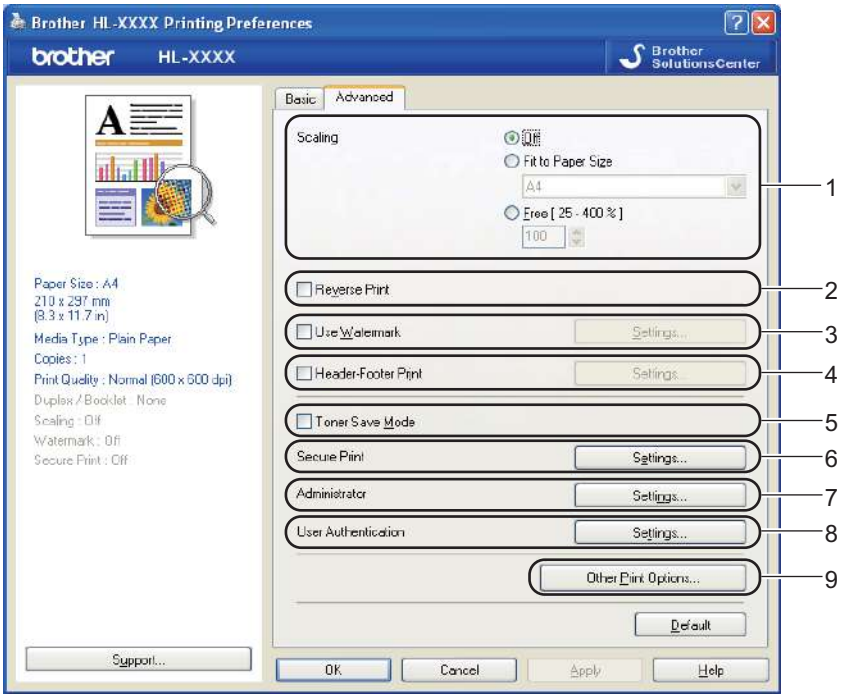

Change the tab settings by clicking one of the following icons:

- **Scaling** (1)
- **Reverse Print** (2)
- **Use Watermark** (3)
- **Header-Footer Print** (4)
- **Toner Save Mode** (5)
- **Secure Print** (6)
- **Administrator** (7)
- **User Authentication** (8)
- **Other Print Options...** (9)

Scaling

You can change the print image scaling.

Reverse Print

Check **Reverse Print** to rotate the print result by 180 degrees.

Use Watermark

You can put a logo or text into your documents as a watermark.

You can choose one of the preset watermarks, or you can use a bitmap file or text that you have created.

When you use a bitmap file as a watermark, you can change the size of the watermark and put it anywhere you like on the page.

When you use text as a watermark, you can change the font, colour and angle settings.

Header-Footer Print

When this feature is enabled, it will print the date and time on your document from your computer's system clock and the PC login user name or the text you entered. By clicking **Settings...**, you can customize the information.

- **ID Print**

  If you select **Login User Name**, your PC login user name will print. If you select **Custom** and enter the text in the **Custom** edit box, the text you entered will print.

Toner Save Mode

You can conserve toner use with this feature. When you set **Toner Save Mode** to **On**, print appears lighter. The default setting is **Off**.

Note

We do not recommend **Toner Save Mode** for printing photo or greyscale images.

Secure Print

Secure documents are documents that are password protected when they are sent to the machine. Only the people who know the password will be able to print them. Since the documents are secured at the machine, you must enter the password using the control panel of the machine to print them.

If you want to create a secure print job, click **Settings...** and then check the **Secure Print** check box. Enter a password in the **Password** box and click **OK**. (For more information about the secure print function, see *Printing Secure data* on page 70.)

Note

Check the **Secure Print** check box if you want to prevent other people from printing your data.

Administrator

Administrators have the authority to limit access to functions such as scaling and watermark.

- **Copies Lock**

  Lock the copy pages selection to prevent multiple copy printing.

- **Multiple Page & Scaling Lock**

  Lock the scaling setting and multiple page setting.

- **Colour / Mono Lock**

  Lock the Colour/Mono settings as Mono to prevent colour printing.

- **Watermark Lock**

  Lock the current settings of the Watermark option to prevent changes being made.

- **Header-Footer Print Lock**

  Lock the current settings of the Header-Footer Print option to prevent changes being made.

- **Set Password...**

  Click here to change the password.

User Authentication

If you are restricted from PC Print by the Secure Function Lock feature, you need to set your ID and PIN in the **User Authentication Settings** dialog. Click **Settings...** of the **User Authentication** and enter your ID and PIN. If your PC login name is registered to Secure Function Lock, you can check the **Use PC Login Name** box instead of entering your ID and PIN.

For more information about Secure Function Lock 2.0, see *Chapter 6* of the *Network User's Guide*.

Note

- When you use the machine on a network, you can see your ID information and the restrictions applied to you by clicking **Check Print Status**. The **Authentication result** dialog will appear.
- When you use the machine on a network, you can make the **Authentication result** dialog appear each time you print by checking **Show print status before printing**.
- If you want to enter your ID and PIN each time you print, check the **Enter ID Name/PIN for each print job**.

Other Print Options

You can set the following in Printer Function:

- **Colour Calibration**
- **Use Reprint**
- **Sleep Time**
- **Improve Print Output**
- **Skip Blank Page**

Colour Calibration

The output density of each colour may vary depending on the temperature and humidity of the environment the machine is in. This setting helps you to improve colour density by letting the printer driver use the colour calibration data stored in your machine.

- **Use Calibration Data**

  If you check this box, the printer driver will use the calibration data retrieved from the machine to set colour matching in the printer driver to ensure consistent print quality.

- **Start Colour Calibration...**

  If you click this button, your machine will start colour calibration and then the printer driver will attempt to get the calibration data from your machine.

- **Get Device Data Automatically**

  If you check this box, the printer driver will automatically get the colour calibration data from your machine.

Note

If you print by using the Direct Print feature or BR-Script printer driver, you need to perform the calibration from the control panel. See *Colour Calibration* on page 83.

Use Reprint

The machine keeps the print job sent to it in memory.
You can reprint the last job without sending the data again from your computer. For more information about the Reprint function, see *Reprinting documents* on page 69.

Note

If you want to prevent other people from printing your data using the reprint function, uncheck the **Use Reprint** check box.

Sleep Time

When the machine does not receive data for a certain period of time, it enters sleep mode. In sleep mode, the machine acts as though it were turned off. When you choose **Printer Default**, the timeout setting will be reset to the specific time set at the factory; this can be altered in the driver or at the machine.
Intelligent Sleep Mode automatically adjusts to the most suitable timeout setting depending on the frequency of your machine use.

While the machine is in sleep mode, the Back light is off and the LCD shows `Sleep`, but the machine can still receive data. Receiving a print file or document or pressing **Go** will automatically wake up the machine to start printing.

Improve Print Output

This feature allows you to improve a print quality problem.

■ **Reduce Paper Curl**

If you choose this setting, the paper curl may be reduced.

If you are printing only a few pages, you do not need to choose this setting. We recommend that you change the printer driver setting in **Media Type** to a thin setting.

Note

This operation makes the temperature of the machine's fusing process lower.

■ **Improve Toner Fixing**

If you choose this setting, the toner fixing on paper may be improved. If this selection does not provide enough improvement, change the printer driver setting in **Media Type** to a thick setting.

Note

This operation makes the temperature of the machine's fusing process higher.

Skip Blank Page

If **Skip Blank Page** is checked, the printer driver automatically detects blank pages and excludes them from printing.

Note

This option does not work when you choose the following options:

- **Use Watermark**
- **Header-Footer Print**
- **N in 1** and **1 in NxN pages** in **Multiple Page**
- **Duplex (Manual)**, **Booklet**, **Booklet (Manual)** and **Duplex** with **Binding Offset** in **Duplex / Booklet**

Accessories tab

Note

From the **Start** menu, select Control Panel and then **Printers and Faxes** [1]. Right-click the **Brother HL-4570CDW (HL-4150CDN) Series** icon and select Properties to access the **Accessories** tab.

[1] **Printers** for Windows® 2000 users.

You can define the paper size for each paper tray and auto detect the serial number in the **Accessories** tab as follows.

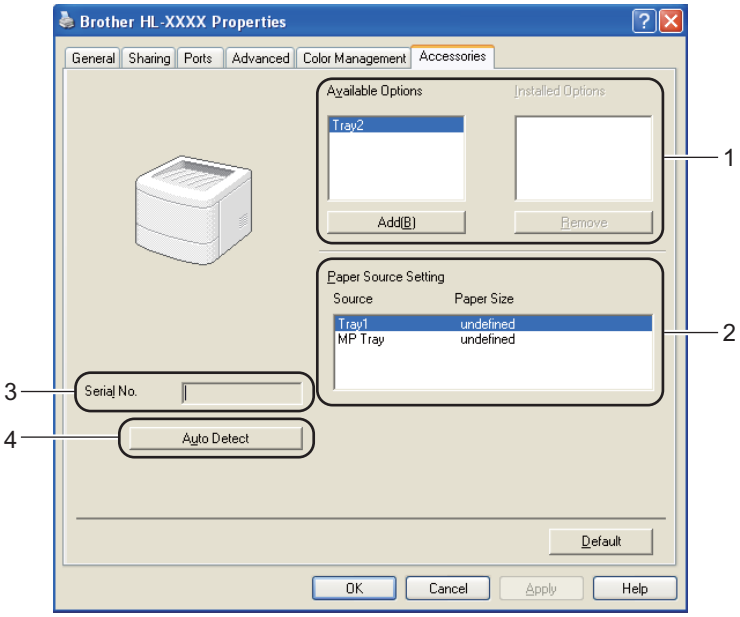

■ **Available Options** / **Installed Options** (1)

You can manually add and remove the options that are installed on the machine. Tray settings will match the installed options.

■ **Paper Source Setting** (2)

This feature recognizes the paper size set from the control panel menu for each paper tray.

■ **Serial No.** (3)

By clicking **Auto Detect**, the printer driver will probe the machine and display its serial number. If it fails to receive the information, the screen will display "----------".

■ **Auto Detect** (4)

The **Auto Detect** function finds the currently installed optional devices and shows the available settings in the printer driver. When you click **Auto Detect**, options that are installed on the machine will be listed in **Installed Options** (1). You can manually add or remove the options by choosing an optional device you want to add or remove, and then clicking **Add** or **Remove**.

Note

The **Auto Detect** (4) function is not available under the following machine conditions:

- The machine power switch is off.
- The machine is in an error state.
- The machine is in a network shared environment.
- The cable is not connected to the machine correctly.

Support

Note

You can access the **Support** dialog box by clicking **Support** in the **Printing Preferences** dialog box.

- **Brother Solutions Center...** (1)

  The Brother Solutions Center (http://solutions.brother.com/) is a website offering information about your Brother product including FAQs (Frequently Asked Questions), User's Guides, driver updates and tips for using your machine.

- **Original Supplies Website...** (2)

  You can visit our website for original Brother supplies by clicking this button.

- **Brother CreativeCenter...** (3)

  You can visit our website for a free and easy online solution for business and home uses by clicking this button.

- **Print Settings** (4)

  This will print the pages that show how the internal settings of the machine have been configured.

- **Check Setting...** (5)

  You can check the current driver settings.

- **About...** (6)

  This will show the list of the printer driver files and version information.

Using the BR-Script3 printer driver (PostScript® 3™ language emulation for Windows®)

(For more information, see the **Help** text in the printer driver.)

Note

- To use the BR-Script3 printer driver you must install the driver using the Custom Install from the CD-ROM.
- The screens in this section are from Windows® XP. The screens on your computer may vary depending on your operating system.

Printing Preferences

Note

You can access the **Printing Preferences** dialog box by clicking **Printing Preferences...** in the **General** tab of the **Brother HL-4570CDW (HL-4150CDN) BR-Script3 Properties** dialog box.

■ Layout tab

You can change the layout setting by choosing the settings for **Orientation**, **Print on Both Sides**, **Page Order** and **Page Per Sheet**.

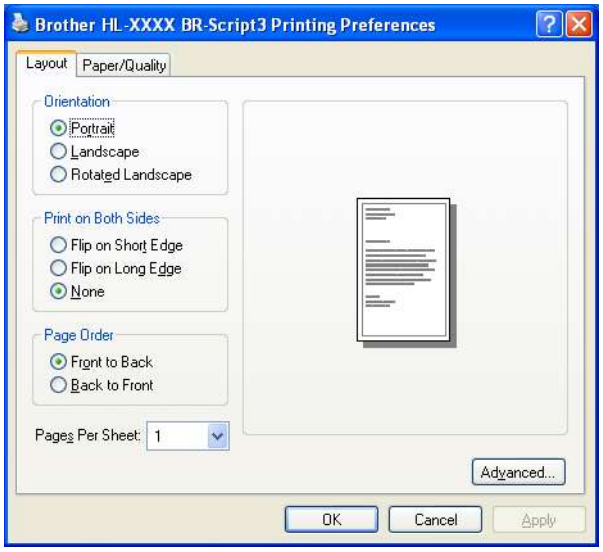

- **Orientation**

  Orientation selects the position of how your document will be printed. (**Portrait**, **Landscape** or **Rotated Landscape**)

- **Print on Both Sides**

  If you want to do duplex printing, choose **Flip on short Edge** or **Flip on Long Edge**.

- **Page Order**

  Specifies the order in which the pages of your document will be printed. **Front to Back** prints the document so that page 1 is on top of the stack. **Back to Front** prints the document so that page 1 is on the bottom of the stack.

- **Page Per Sheet**

  The Page Per Sheet selection can reduce the image size of a page by allowing multiple pages to be printed on one sheet of paper. Also, you can print a document in the booklet style automatically when you choose **Booklet**.

■ Paper/Quality tab

Choose the **Paper Source** and **Color**.

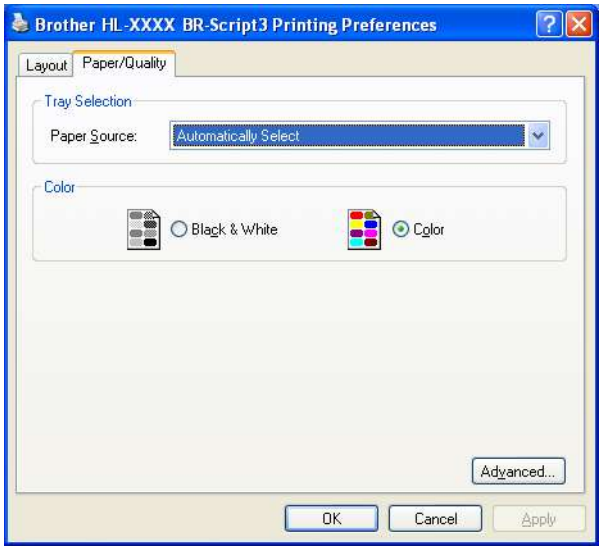

- **Paper Source**

  You can choose **Automatically Select**, **Auto Select**, **Tray1**, **Tray2**, **MP Tray** or **Manual Feed**.

- **Color**

  Choose how to print colour graphics either in **Black & White** or **Color**.

Advanced options

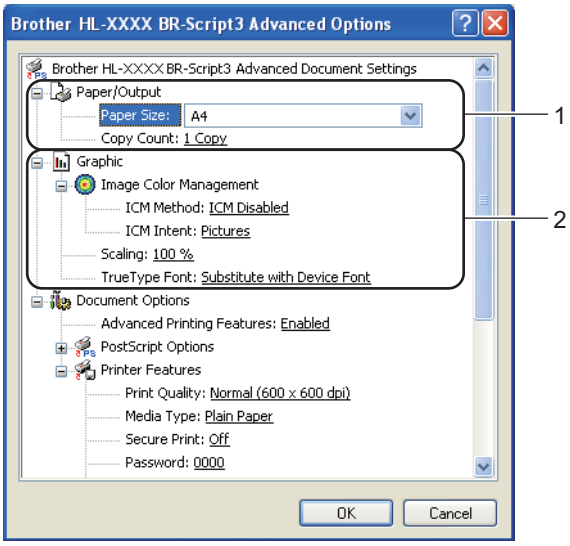

1. Choose the **Paper Size** and **Copy Count** (1).

   ■ **Paper Size**

   From the drop-down box choose the Paper Size you are using.

   ■ **Copy Count**

   The copy selection sets the number of copies that will be printed.

2. Set the **Image Color Management**, **Scaling** and **TrueType Font** settings (2).

   ■ **Image Color Management**

   Specifies how to print your colour graphics.

   - If you don’t want to enable **Image Color Management**, click **ICM Disabled**.
   - If you want the calculations for colour matching to be performed on the host computer before it sends the document to the machine, click **ICM Handled by Host System**.
   - If you want the calculations for colour matching to be performed on your machine, click **ICM Handled by Printer using printer calibration**.

   ■ **Scaling**

   Specifies whether to reduce or enlarge documents, and by what percentage.

   ■ **TrueType Font**

   Specifies the TrueType font options. Click **Substitute with Device Font** (the default) to use equivalent printer fonts for printing documents that contain TrueType fonts. This will permit faster printing; however, you might lose special characters not supported by the printer font. Click **Download as Softfont** to download TrueType fonts for printing instead of using printer fonts.

3 You can change settings by choosing a setting in the **Printer Features** list (3):

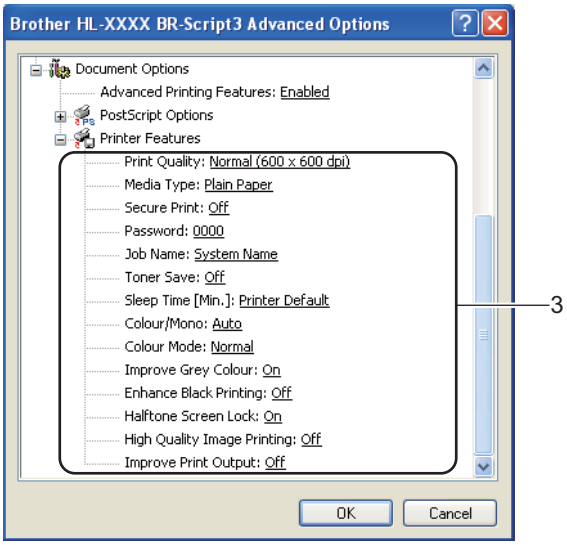

■ **Print Quality**

You can choose the following print quality settings.

- **Normal (600 x 600 dpi)**

  600×600 dpi. Recommended for ordinary printing. Good print quality with reasonable print speeds.

- **Fine (2400 dpi class)**

  2400 dpi class. The finest print mode. Use this mode to print precise images such as photographs. Since the print data is much larger than in normal mode, processing time / data transfer time, and printing time will be longer.

Note

The print speed will change depending on what print quality setting you choose. Higher print quality takes longer to print, while lower print quality takes less time to print.

■ **Media Type**

You can use the following types of media in your machine. For the best print quality, select the type of media that you wish to use.

Plain Paper	**Thin Paper**	**Thick Paper**	**Thicker Paper**
Bond Paper	**Envelopes**	**Env. Thick**	**Env. Thin**
Recycled Paper	**Label**	**Glossy Paper**	

Note

If you are using glossy paper, choose **Glossy Paper**. Put only one sheet at a time in the MP tray to avoid a paper jam.

■ **Secure Print**

Secure Print allows you to secure documents that are password protected when they are sent to the machine. Only the people who know the password will be able to print them. Since the documents are secured at the machine, you must enter the password using the control panel of the machine. The secured document must have a **Password** and **Job Name**.

(For more information about the secure print function, see *Printing Secure data* on page 70.)

■ **Password**

Choose the password for your secured document that you send to the machine from the drop-down box.

■ **Job Name**

Choose the Job name from the drop-down list for your secured document.

■ **Toner Save**

You can conserve toner use with this feature. When you set **Toner Save Mode** to **On**, print appears lighter. The default setting is **Off**.

Note

We do not recommend **Toner Save** for printing Photo or greyscale images.

■ **Sleep Time [Min.]**

When the machine does not receive data for a certain period of time, it enters sleep mode. In sleep mode, the machine acts as though it were turned off. When you choose **Printer Default**, the timeout setting will be reset to the specific time set at the factory; this can be altered in the driver or at the machine. While the machine is in sleep mode, the LCD shows `Sleep`, but the machine can still receive data. Receiving a print file or document or pressing **Go** will automatically wake up the machine to start printing.

■ **Colour / Mono**

You can choose the following colour mode:

- **Auto**

  The machine checks the content of your documents for colour. If colour is detected, it prints in colour. If no colour content is detected, it prints in monochrome. The total printing speed may become slower.

- **Colour**

  The device will print all pages in full colour mode.

- **Mono**

  Selecting Mono mode prints your documents in greyscale.

Note

- Sometimes a document can contain colour information even if it appears to be monochrome (for example, grey areas can actually be made from a combination of colours).
- If either the Cyan, Magenta or Yellow toner reaches the end of its life while printing a colour document, the print job cannot be completed. You can choose to start the print job again in **Mono** mode, as long as black toner is available.

■ **Colour Mode**

The following options are available in Colour Matching mode:

- **Normal**

  This is the Default colour mode.

- **Vivid**

  The colour of all elements are adjusted to become a more vivid colour.

- **None**

■ **Improve Grey Colour**

You can improve the image of a shaded area.

■ **Enhance Black Printing**

If a black graphic cannot print correctly, choose this setting.

■ **Halftone Screen Lock**

Stops other applications from modifying the Halftone settings. The default setting is **On**.

■ **High Quality Image Printing**

You can get high quality image printing. If you set **High Quality Image Printing** to **On**, the printing speed will be slower.

■ **Improve Print Output**

This feature allows you to improve a print quality problem.

- **Reduce Paper Curl**

  If you choose this setting, the paper curl may be reduced. If you are printing only a few pages, you do not need to choose this setting. We recommend that you change the printer driver setting in **Media Type** to a thin setting.

Note

This operation makes the temperature of the machine's fusing process lower.

- **Improve Toner Fixing**

  If you choose this setting, the toner fixing on paper may be improved. If this selection does not provide enough improvement, change the printer driver setting in **Media Type** to a thick setting.

Note

This operation makes the temperature of the machine's fusing process higher.

Ports tab

Choose the port where your machine is connected or the path to the network machine you are using.

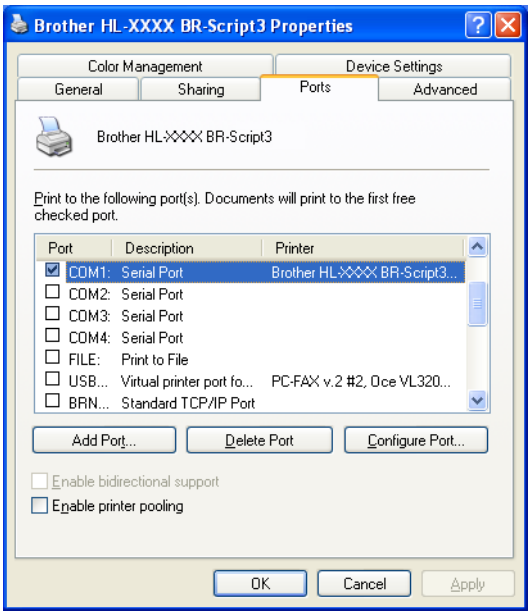

Features in the printer driver (for Macintosh)

This machine supports Mac OS X 10.4.11, 10.5.x and 10.6.x.

Note

The screens in this section are basically from Mac OS X 10.5.x. The screens on your Macintosh will vary depending on your operating system.

Choosing page setup options

1. From an application such as Apple TextEdit, click **File**, then **Page Setup**. Make sure HL-XXXX (where XXXX is your model name) is chosen in the **Format for** pop-up menu. You can change the settings for **Paper Size**, **Orientation** and **Scale**, then click **OK**.

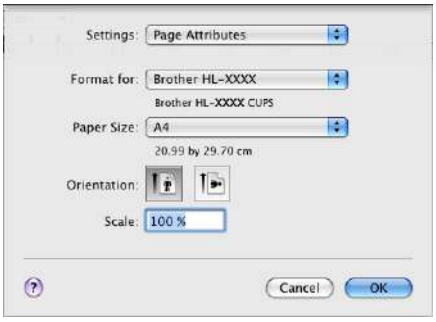

2. From an application such as Apple TextEdit, click **File**, then **Print** to start printing.

■ For Mac OS X 10.4.11

■ For Mac OS X 10.5.x and 10.6.x

For more page setup options, click the disclosure triangle beside the Printer pop-up menu.

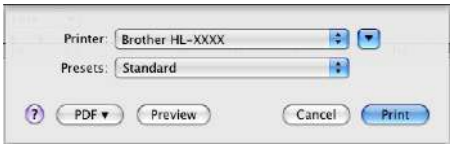

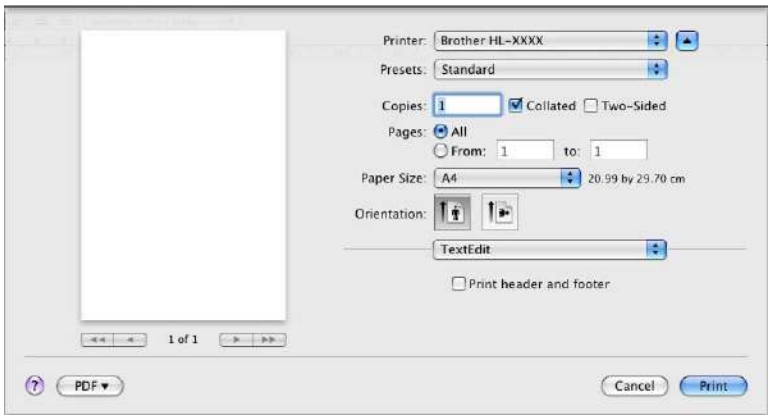

Choosing printing options

To control special printing features, choose the options in the Print dialog box. For the details of available options, see the following descriptions of each option.

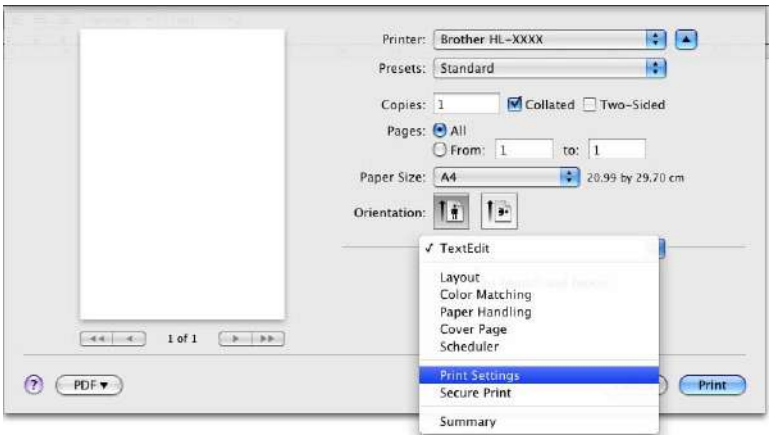

Cover Page

You can make the following cover page settings:

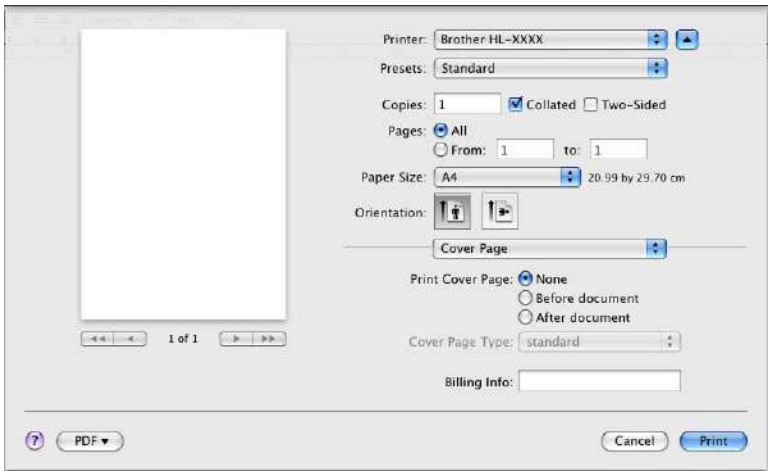

■ **Print Cover Page**

If you want to add a cover page to your document, use this function.

■ **Cover Page Type**

Choose a template for the cover page.

■ **Billing Info**

If you want to add the billing information to the cover page, enter text in the **Billing Info** box.

Layout

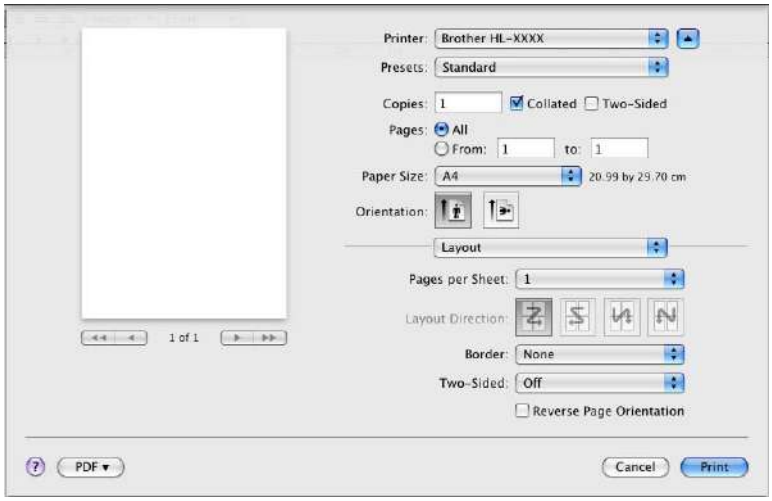

■ **Pages per Sheet**

Choose how many pages will appear on each side of the paper.

■ **Layout Direction**

When you specify the pages per sheet, you can also specify the direction of the layout.

- **Border**

  If you want to add a border, use this function.

- **Two-Sided**

  If you want to do duplex printing, choose **Long-edge binding** or **Short-edge binding**.

- **Reverse Page Orientation** (Mac OS X 10.5.x and 10.6.x only)

  Check **Reverse Page Orientation** to reverse the data from up to down.

- **Flip Horizontally** (Mac OS X 10.6.x only)

  Check **Flip Horizontally** to print as a reflection flipped left-to-right.

Secure Print

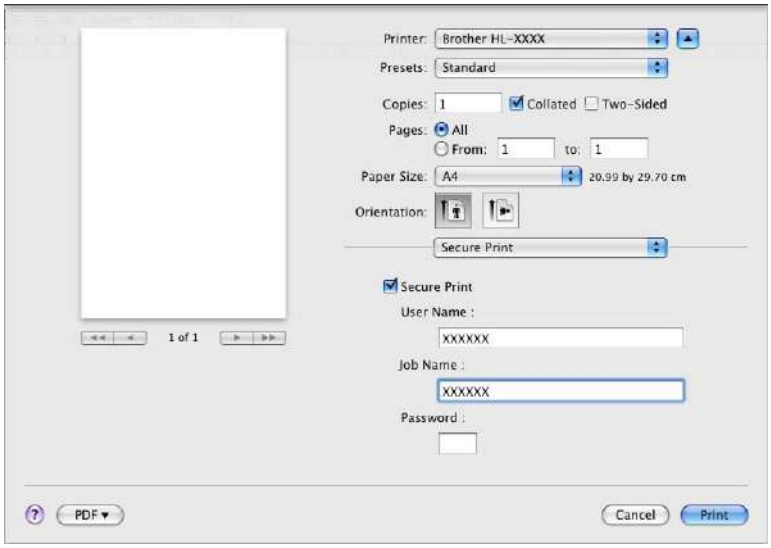

Secure Print: Secure documents are documents that are password protected when they are sent to the machine. Only the people who know the password will be able to print them. Since the documents are secured at the machine, you must enter the password using the control panel of the machine to print them.

If you want to create a secure print job, check the **Secure Print** box. Enter a user name, job name and password, then click **Print**. (For more information about the secure print function, see *Printing Secure data* on page 70.)

Note

Check the **Secure Print** check box if you want to prevent other people from printing your data.

Print Settings

You can change settings by choosing a setting in the **Print Settings** list:

Basic tab

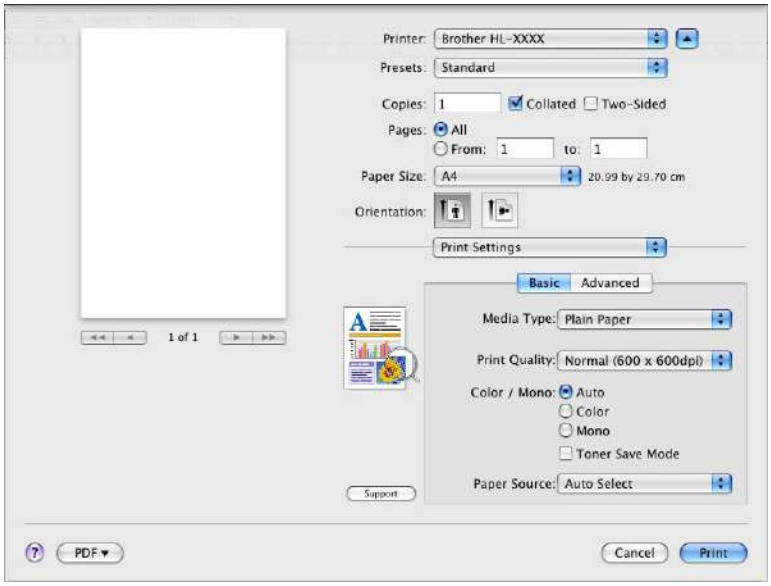

■ **Media Type**

You can change the media type to one of the following:

- **Plain Paper**
- **Thin Paper**
- **Thick Paper**
- **Thicker Paper**
- **Bond Paper**
- **Envelopes**
- **Env. Thick**
- **Env. Thin**
- **Recycled Paper**
- **Label**
- **Glossy Paper**

Note

If you are using glossy paper, choose **Glossy Paper**. Put only one sheet at a time in the MP tray to avoid a paper jam.

Print Quality

You can choose the following print quality settings.

- **Normal (600 x 600 dpi)**

  600 dpi class. Recommended for ordinary printing. Good print quality with good print speed.

- **Fine (2400 dpi class)**

  2400 dpi class. The finest print mode. Use this mode to print precise images such as photographs. Since the print data is much larger than in normal mode, processing time, data transfer time, and printing time will be longer.

Note

The print speed will change depending on what print quality setting you choose. Higher print quality takes longer to print, while lower print quality takes less time to print.

Color / Mono

You can change the Color/Mono settings as follows:

- **Auto**

  The machine checks the content of your documents for colour. If colour is detected, it prints in colour. If no colour content is detected, it prints in monochrome. The total printing speed may become slower.

- **Color**

  When your document contains colour and you want to print it in colour, select this mode.

- **Mono**

  Select this mode if your document has only black and greyscale text and/or objects. Mono mode makes the print processing speed faster than colour mode. If your document contains colour, selecting Mono mode prints your document in 256 levels of grey.

Note

- Sometimes a document can contain colour information even if it appears to be monochrome (for example, grey areas can actually be made from a combination of colours).
- If either the Cyan, Magenta or Yellow toner reaches the end of its life while printing a colour document, the print job cannot be completed. You can choose to start the print job again in **Mono** mode, as long as black toner is available.

Toner Save Mode

You can conserve toner use with this feature. When you set **Toner Save Mode** to On, print appears lighter. The default setting is **Off**.

Note

We do not recommend Toner Save for printing Photo or greyscale images.

Paper Source

You can choose **Auto Select**, **Tray 1**, **Tray 2**, **MP Tray** or **Manual**.

■ **Reverse Print** (Mac OS X 10.4.11 only)

Check **Reverse Print** to rotate the data by 180 degrees.

Advanced tab

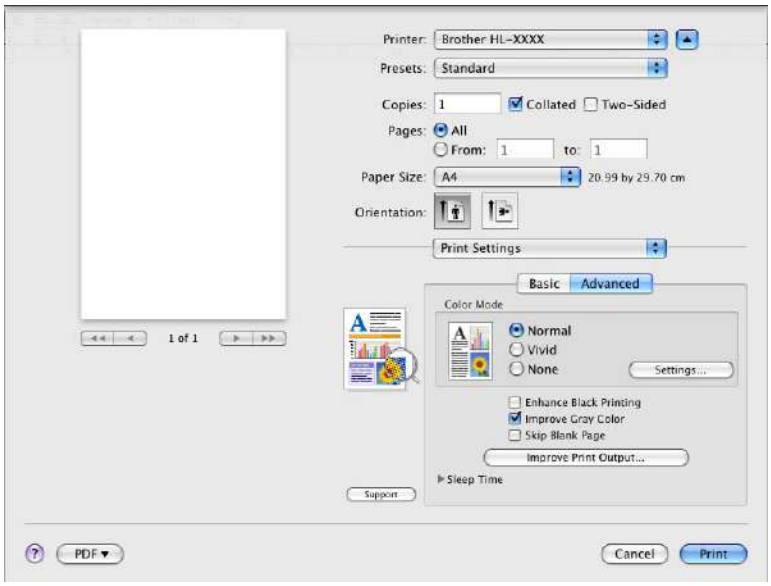

■ **Color Mode**

You can change the colour mode as follows:

- **Normal**

  This is the Default colour mode.

- **Vivid**

  The colour of all elements are adjusted to become a more vivid colour.

- **None**

■ **Enhance Black Printing**

If a black graphic cannot be printed correctly, choose this setting.

■ **Improve Gray Color**

You can improve the image quality of shaded areas by selecting the **Improve Gray Color** check box.

■ **Skip Blank Page**

If **Skip Blank Page** is checked, the printer driver automatically detects blank pages and excludes them from printing.

■ **Improve Print Output...**

This feature allows you to improve a print quality problem.

- **Reduce Paper Curl**

  If you choose this setting, the paper curl may be reduced.

If you are printing only a few pages, you do not need to choose this setting. We recommend that you change the printer driver setting in **Media Type** to a thin setting.

Note

This operation makes the temperature of the machine's fusing process lower.

- **Improve Toner Fixing**

  If you choose this setting, the toner fixing on paper may be improved. If this selection does not provide enough improvement, change the printer driver setting in **Media type** to a thick setting.

Note

This operation makes the temperature of the machine's fusing process higher.

Sleep Time

When the machine does not receive data for a certain period of time, it enters sleep mode. In sleep mode, the machine acts as though it were turned off. When you choose **Printer Default**, the timeout setting will be reset to the specific time set at the factory; this can be altered in the driver or at the machine. If you want to change the sleep time, choose **Manual** and then enter the time in the text box on the driver.

While the machine is in sleep mode, the LCD shows `Sleep`, but the machine can still receive data. Receiving a print file or document or pressing **Go** will automatically wake up the machine to start printing.

Manual Duplex Printing

■ For Mac OS X 10.4.11

1. Select **Paper Handling**.
2. Choose **Reverse** (for MP tray) or **Normal** (for Tray 1 and Tray 2) in **Page Order**. Then choose **Even numbered pages** and click **Print**.

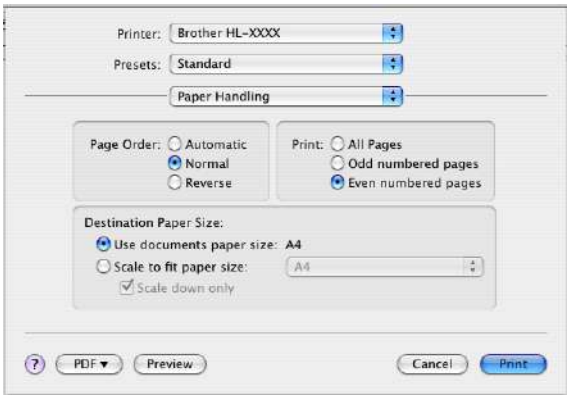

3. Reload printed paper into the tray with the blank side facing up (for MP tray) or facing down (for Tray 1 and Tray 2).
4. Choose **Normal** in **Page Order**. Then choose **Odd numbered pages** and click **Print**.

■ For Mac OS X 10.5.x and 10.6.x

1. Select **Paper Handling**.
2. Choose **Reverse** (for MP tray) or **Normal** (for Tray 1 and Tray 2) in **Page Order**. Then choose **Even Only** in **Pages To Print** and click **Print**.

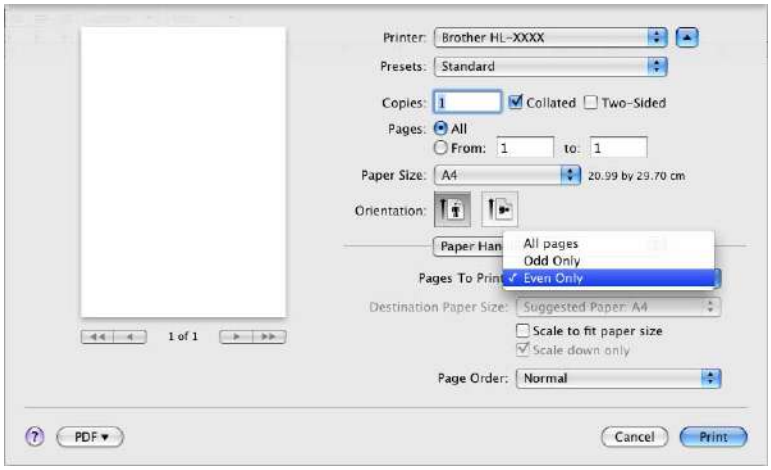

3. Reload printed paper into the tray with the blank side facing up (for MP tray) or facing down (for Tray 1 and Tray 2).
4. Choose **Normal** in **Page Order**. Then choose **Odd Only** in **Pages To Print** and click **Print**.

Automatic Duplex Printing

■ For Mac OS X 10.4.11

1. Select **Layout**.
2. Choose **Long-edged binding** or **Short-edged binding** in **Two-Sided**.

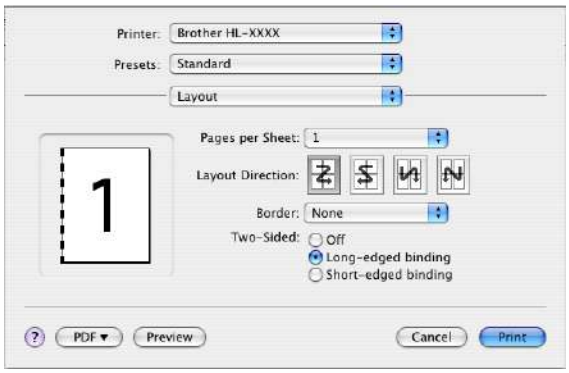

3. Select **Paper Handling**.
4. Choose **All Pages** and click **Print**.

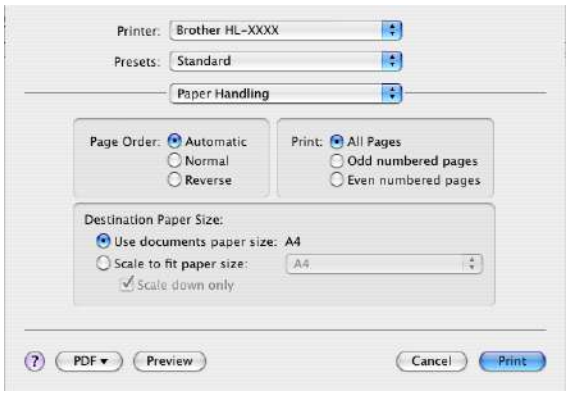

■ For Mac OS X 10.5.x and 10.6.x

1. Select **Layout**.
2. Choose **Long-edge binding** or **Short-edge binding** in **Two-Sided**. Automatically the **Two-Sided** check box is checked.

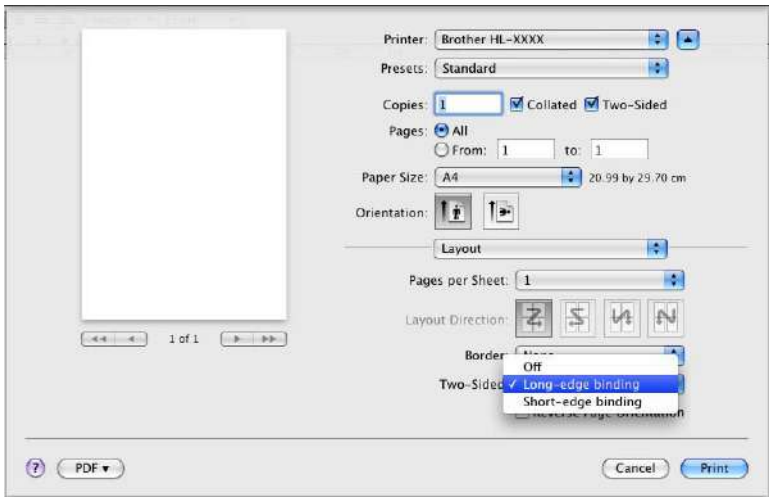

3. Select **Paper Handling**.
4. Choose **All pages** in **Pages To Print** and click **Print**. You can print pages on both sides of the paper.

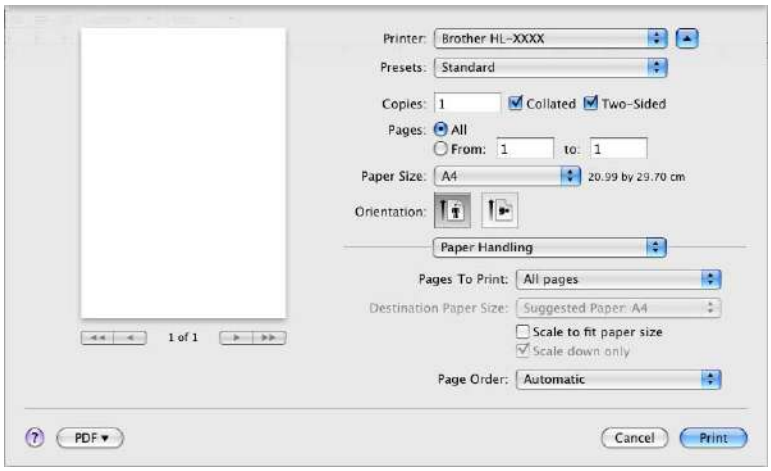

Status Monitor

This reports the machine status (any errors that may happen with the machine) when printing. If you would like to turn Status Monitor on, follow these steps:

- For Mac OS X 10.4.11

  1. Run the **Printer Setup Utility** (from the **Go** menu, choose **Applications**, **Utilities**), then choose the machine.
  2. Click the **Utility**, then Status Monitor will start up.

- For Mac OS X 10.5.x

  1. Run the **System Preferences**, select **Print & Fax**, then choose the machine.
  2. Click the **Open Print Queue...**, then click **Utility**. Status Monitor will start up.

- For Mac OS X 10.6.x

  1. Run the **System Preferences**, select **Print & Fax**, then choose the machine.
  2. Click the **Open Print Queue...**, then click **Printer Setup**. Select the **Utility** tab then click **Open Printer Utility**. Status Monitor will start up.

Uninstalling the printer driver

You can uninstall the printer driver that you have installed with the following steps.

Note

- This is not available if you installed the printer driver from the Windows **Add printer** [1] function.
- After uninstalling, we recommend that you restart your computer to remove files that were in use during the uninstall.

[1] **Add a printer** for Windows® 7 and Windows Server® 2008 R2 users

Printer driver for Windows®

1. Click the **Start** button, point to **All Programs** [1], **Brother**, and then to your machine name.
2. Click **UnInstall**.
3. Follow the instructions on the screen.

[1] **Program** for Windows® 2000 users

Printer driver for Macintosh

For Mac OS X 10.4.11

1. Log in as an ‘Administrator’.
2. Run the **Printer Setup Utility** (from the **Go** menu, choose **Applications**, **Utilities**), then choose the printer you want to remove and remove it by clicking the **Delete** button.

For Mac OS X 10.5.x and 10.6.x

1. Log in as an ‘Administrator’.
2. From the Apple menu, choose **System Preferences**. Click **Print & Fax**, then choose the printer you want to remove and remove it by clicking the **-** button.
3. Click **OK** [1].

[1] **Delete Printer** for Mac OS X 10.6.x users

Software

Software for networks

For the information about network utility software, see *Chapter 1* of the *Network User's Guide*.

3 Control Panel

Control panel

This machine has one back lit Liquid Crystal Display (LCD), seven buttons and two Light Emitting Diodes (LEDs) on the control panel. The LCD is a two-line, 16 characters per line display and can be tilted up to a vertical position. You can adjust the angle of the LCD by tilting it up or down.

The illustration is based on HL-4570CDW.

Buttons

You can control the basic machine operations and change various printer settings with seven buttons (**Go**, **Cancel**, **Secure**, **+**, **-**, **Back**, **OK**).

button	Operations
Go	Clear error messages. Pause and continue printing. Switch to Reprint mode.
Cancel	Stop and cancel the printing job in progress. Exit from the control panel menu, Reprint menu, Secure Print menu, or Direct Print menu.
Secure	Choose the Secure Print menu.
+	Scroll backward through menus and the available options. Enter numbers and increase the number.
-	Scroll forward through menus and the available options. Enter numbers and decrease the number.
Back	Go back one level in the menu structure.
OK	Choose the control panel menu. Set the chosen menus and settings.

Go

You can pause printing by pressing **Go**. Pressing **Go** again restarts the print job. During a pause, the machine is offline.

Pressing **Go** allows you to choose the displayed option in the last menu level. After changing a setting, the machine returns to the Ready state.

If Data remains in the machine memory, pressing **Go** will print that remaining data.

You can clear some error indications by pressing **Go**. Follow the control panel instructions or see *Troubleshooting* on page 140 to clear all other errors.

You can switch to Reprint mode by pressing **Go** and holding it down for about 4 seconds. (For details, see *Reprinting documents* on page 69.)

Note

- The options you have chosen are shown with an asterisk at the end of the display. Since the asterisk shows what you have chosen, you can easily see the current settings as you look through the LCD.
- If the machine is in Pause mode and you do not want to print the data left, press **Cancel**. Once the job has been canceled, the machine will return to the Ready state.

Cancel

You can cancel the processing or printing of data by pressing **Cancel**. The LCD shows `Cancel printing.` until the job is canceled. To delete all jobs, press **Cancel** for about 4 seconds until the LCD shows `Job Cancel (All)` and then release it.

After canceling the job, the machine returns to the Ready state.
Pressing **Cancel** will exit the control panel menu and return the machine to the Ready state.

Secure

If you want to print secure data protected by a password, press **Secure**. For details, see *Printing Secure data* on page 70.

+ or - button

Moving through menus on the LCD

Pressing **+** or **-** when the machine is in the Ready state, takes it offline and the LCD will show the control panel menu.

Press to scroll through the menus and options. Press the button until you see the setting you want.

Entering numbers

You can enter numbers in two ways. You can press **+** or **-** to move up or down one number at a time, or you can hold down **+** or **-** to move faster. When you see the number you want, press **OK**.

Back

Pressing **Back** when the machine is in the Ready state takes it offline, and the LCD will show the control panel menu.

Pressing **Back** allows you to return to the previous level from the current menu level.

Back also allows you to choose the previous digit while setting numbers.

When you choose a setting and it does not have an asterisk (**OK** was not pressed), **Back** allows you to return to the previous menu level with the original setting unchanged.

OK

Pressing **OK** when the machine is in the Ready state takes it offline, and the LCD will show the control panel menu.

Pressing **OK** allows you to choose the displayed menu or option. After changing a setting, the LCD shows `Accepted` and then the machine returns to the previous menu level.

Note

The options you have chosen are shown with an asterisk at the end of the display. Since the asterisk shows what you have chosen, you can easily see the current settings as you look through the LCD.

LEDs

The LEDs are lights which show the machine status.

Data LED (Green)

LED indication	Meaning
On	Data is in the machine memory.
Blinking	Receiving or processing data.
Off	No remaining data in the memory.

Error LED (Orange)

LED indication	Meaning
Blinking	There is a problem with the machine.
Off	There is no problem with the machine.

LCD

The LCD shows the current machine status. When you use the buttons on the control panel, the LCD will change.
If there are any problems, the LCD will show the error message, maintenance message, or call service message so you will know that you need to take action. (For more information about these messages, see *LCD messages* on page 141.)

Back light

Light	Meaning
Off	The machine is off or in sleep status.
Green (General, Error, Setting)	Ready to print Printing Warming up There is a problem with the machine. Choosing a menu, (Control panel menu, Reprint menu, or Direct Print menu) Canceling the job Pause

LCD messages

The message on the LCD shows the current machine status during normal operation.

```
Ready
  K■ Y■ M□ C■  ⁞
```

The ■ and □ marks indicate the status of each toner cartridge, Black (K), Yellow (Y), Magenta (M) and Cyan (C) (where the □ means blinking). When a mark blinks (□), the indicated toner cartridge is near the end of its life. When the replacement of a toner cartridge becomes necessary, corresponding ■ mark disappears.

The ⁞ mark indicates the wireless signal strength with four levels. (. means no signal, ⁞ means weak, ⁞ means middle, and ⁞ means strong.) (HL-4570CDW only)

When an error has occurred, the type of error is displayed on the first line of the LCD message at first as shown below.

The message on the second line shows information for clearing the error.

```
Cover is Open
Close the Front
```

Machine status messages

The following table shows the machine status messages during normal operation:

Machine Status Message	Meaning
`Cooling Down`	The machine is cooling down.
`Job Cancel` `Job Cancel (All)`	Canceling the job.
`Ignore Data`	Machine is ignoring data processed using the PS driver.
`Pause`	The machine has suspended its operations. Press **Go** to start the machine again.
`Please Wait`	The machine is warming up. The machine is carrying out the calibration process.
`Printing`	Printing.
`Ready`	Ready to print.
`Sleep`	In sleep mode (power save mode). The machine acts as though it were turned off.
`Deep Sleep` [1]	In Deep Sleep mode (reducing more power consumption than Sleep mode). The machine acts as though it were turned off. If the machine does not receive data for a certain length of time while it is in Sleep mode, it enters Deep Sleep mode automatically.

[1] (HL-4570CDW only) When the Wireless Network is enabled the machine does not transfer to Deep Sleep mode. If you want to disable the Wireless Network, change setting of the `WLAN Enable` to `Off`. (See *Network for HL-4570CDW users* on page 77.)

Reprinting documents

Reprinting the last job

You can reprint the data from the last print job without sending it from the computer again.

Note

- The Reprint function is not available when Secure Function Lock 2.0 is On. For more information about Secure Function Lock 2.0, see the *Chapter 6* of the *Network User's Guide*.
- If the machine does not have enough memory to spool the print job data, it will not print the document.
- If you wait 30 seconds to continue the control panel operation, the LCD leaves the `Reprint` setting automatically.
- For more information about the settings in the printer driver, see *Advanced tab* on page 36.
- After turning the power switch off, the last job data will be deleted.

How to reprint the last job

Note

If you print with the Windows® printer driver we have supplied with the machine, the settings for **Use Reprint** in the printer driver will take priority over the settings made on the control panel. (For more information, see *Use Reprint* on page 39.)

1. Make sure that the `Reprint` setting is `On` by using the buttons on the control panel to enter the `General Setup` menu.
2. Press **Go** for about 4 seconds and release it. Make sure that the LCD shows `Reprint`.
3. Press **+** or **-** to choose `Print`. Press **OK**.
4. Press **+** to enter the number of copies you want. You can choose between 1 and 999 `Copies`.
5. Press **OK** or **Go**.

Printing Secure data

Secure data

Secure documents are protected by a password and only those people who know the password will be able to print the document. The machine will not print the document when you send it for printing. To print the document, you must use the control panel of the machine (with the password). Secure data will be deleted after it is printed once.

When the area to spool data is full, the LCD shows `Out of Memory`. Press **Cancel** to return to the Ready state.

If you want to delete the spooled data, you can carry out this operation using the control panel or the Web based management application.

Note

- Secure data will be deleted when the machine is turned off.
- If you wait 30 seconds to continue the control panel operation, the LCD leaves the Secure Print setting automatically.
- For more information about the settings in the printer driver and how to create secure data, see *Secure Print* on page 37 (For Windows® printer driver), *Advanced options* on page 45 (For Windows® BR-Script printer driver) or *Secure Print* on page 53 (For Macintosh printer driver).

How to print Secure data

1. Press **Secure**.
2. Press **+** or **-** to choose the user name. Press **OK**.
3. Press **+** or **-** to choose the job. Press **OK**.
4. Press **+** or **-** to enter your password. Press **OK**.
5. Press **+** or **-** to choose `Print`. Press **OK**.
6. Press **+** or **-** to enter the number of copies you want.
7. Press **OK** or **Go**.

Menu table

There are eight menus. For more information about the selections available in each menu, see the tables below.

If no control panel operations are performed for 30 seconds, the LCD automatically returns to Ready.

Note

The control panel LCD names for the paper trays are as follows.

- Standard paper tray: `Tray1`
- Multi-purpose tray: `MP`
- Optional lower tray: `Tray2`

Machine Info.

Submenu	Menu Selections	Options	Descriptions
Print Settings			Prints the Printer Settings page.
Print NetSetting			Prints the Network Configuration List.
Print WLANReport (HL-4570CDW only)			Prints the result of wireless LAN connectivity diagnosis.
Test Print			Prints the test page.
Demo Print			Prints the demonstration sheet.
Drum Dot Print			Prints the drum dot check sheet.
Print Font	HP LaserJet		Prints the font list and samples of HP LaserJet.
	BR-Script 3		Prints the font list and samples of BR-Script.
Serial No.			Shows the machine serial number.
Version	Main Version		Shows the main firmware version.
	Sub Version		Shows the sub firmware version.
	RAM Size		Shows the size of memory in this machine.
Page Count	Total		Shows the current total printed pages.
	Color		Shows the current total colour printed pages.
	Monochrome		Shows the current total monochrome printed pages.
Image Count	Black(K)		Shows the amount of images produced by the black colour.
	Cyan(C)		Shows the amount of images produced by the cyan colour.
	Magenta(M)		Shows the amount of images produced by the magenta colour.
	Yellow(Y)		Shows the amount of images produced by the yellow colour.
The factory settings are shown in Bold with an asterisk.			

Machine Info. (continued)

Submenu	Menu Selections	Options	Descriptions
Drum Count			Shows the current total pages printed for the drum unit.
Parts Life	Drum Life		Shows the remaining life for the drum unit.
	Belt Life		Shows the remaining life for the belt unit.
	PF KitMP Life		Shows the pages left to print with the PF kit MP.
	PF Kit1 Life		Shows the pages left to print with the PF kit 1.
	PF Kit2 Life		Shows the pages left to print with the PF kit 2.
	Fuser Life		Shows the pages left to print with the fuser unit.
	Laser Life		Shows the pages left to print with the laser unit.
Reset Parts Life (Appears only when the drum unit or belt unit has exceeded its rated life.)	Drum Unit		Resets the drum unit life. Appears when you replace the drum unit.
	Belt Unit		Resets the belt unit life. Appears when you replace the belt unit.
The factory settings are shown in Bold with an asterisk.			

Paper Tray

Submenu	Options	Descriptions
Tray Use	**Auto***/MP Only/Tray1 Only/Tray2 Only	Chooses the tray which you use.
Manual Feed	**Off***/On	Chooses whether to feed paper manually.
Priority	(Without Tray2 installed) **MP>T1***/T1>MP (With Tray2 installed) **MP>T1>T2***/MP>T2>T1/T1>T2>MP/T2>T1>MP/T1>T2/T2>T1/T1>MP>T2/T2>MP>T1	When Auto is chosen in Tray Use: Chooses the order in which the machine uses the paper trays that contain paper of the same size.
MP First	**Off***/On	Chooses whether to feed paper from the MP tray as a priority.
Duplex	**Off***/On(Long Bind)/On(Short Bind)	Chooses whether you want to automatically print on both sides of the paper.
MP Size	**Any***/Letter/Legal/A4...	Chooses the size of paper you put in the MP tray.
Tray1 Size	**Any***/Letter/Legal/A4...	Chooses the size of paper you loaded in the standard paper tray.
Tray2 Size	**Any***/Letter/Legal/A4...	Chooses the size of paper you loaded in the optional lower tray.
The factory settings are shown in Bold with an asterisk.		

General Setup

Submenu	Menu Selections	Options	Descriptions
Local Language		**English***/Français...	Changes the LCD language for your country.
Ecology	Sleep Time	0/1/2/**3***/4/5...Min	Sets the time to return to Power Save mode.
	Toner Save	**Off***/On	Increases the page yield of the toner cartridge.
Panel Control	Button Repeat	**0.1***/0.4/0.6/0.8/1.0/1.4/1.8/2.0 Sec	Sets the time for the LCD message to change when holding **+** or **-** at intervals.
	Message Scroll	**Level 1***/Level 2.../Level 10	Sets the time in seconds that an LCD message will scroll across the LCD. From Level 1=0.2 sec to Level 10=2.0 sec.
	LCD Contrast	-□□■□□+	Adjusts the contrast of the LCD.
	Auto Online	**On***/Off	Sets the machine to the mode which automatically returns to Ready state.
Setting Lock		**Off***/On	Turns the lock panel settings On or Off using the password.
Reprint		**Off***/On	Turns the reprint settings On or Off.
Interface	Select	**Auto***/USB/Network	Chooses the interface you use. If you choose Auto, the machine automatically changes the interface to USB or Ethernet depending on which interface is receiving data.
	Auto IF Time	1/2/3/4/**5***.../99 (Sec)	You need to set the time-out period for the auto interface selection.
	Input Buffer	Level 1/2/3/**4***.../7	Increases or decreases the input buffer capacity.
The factory settings are shown in Bold with an asterisk.			

Print Menu

Submenu	Menu Selections	Options	Descriptions
Emulation		**Auto***/HP LaserJet/ BR-Script 3	Chooses the emulation mode you use. If you choose Auto, the machine can change the emulation mode automatically. If you choose an option other than Auto, each emulation mode will be fixed.
Auto Continue		**Off***/On	Chooses whether to automatically clear the removable error.
Output Color		**Auto***/Color/Mono	Sets the output colour.
Media Type		**Plain Paper***/ Thick Paper/ Thicker Paper/ Thin Paper/ Recycled Paper/ Bond Paper/ Envelopes/ Env. Thick/Env. Thin/ Hagaki/Label/ Glossy Paper	Sets the type of paper.
Paper		Letter/Legal/**A4***/ Executive/Com-10/DL/ JIS B5/B5/A5/A5 L/ JIS B6/B6/A6/Monarch/ C5/Folio/DL L/Hagaki	Sets the size of paper.
Copies		**1***/2.../999	Sets the number of printed pages.
Orientation		**Portrait***/Landscape	This machine can print pages in portrait or landscape orientation.
Print Position	X Offset	-500/-499.../**0***.../499/ 500Dots	Moves the print start position (at the top-left corner of pages) horizontally up to -500 (left) to +500 (right) dots in 300 dpi.
	Y Offset	-500/-499.../**0***.../499/ 500Dots	Moves the print start position (at the top-left corner of pages) vertically up to -500 (up) to +500 (down) dots in 300 dpi.
Auto FF		**Off***/On	Allows you to print the remaining data without pressing **Go**.
The factory settings are shown in Bold with an asterisk.			

Print Menu (continued)

Submenu	Menu Selections	Options	Descriptions
HP LaserJet	Font No.	I000.../**I059***.../I071	
	Font Pitch	0.44/**10***.../99.99	
	Font Point	4.00/**12***.../999.75	
	Symbol Set	**PC-8***...	Sets the symbol set or the character set.
	Table Print		Prints code table. If Change Emulation appears on the LCD, choose Auto or HP LaserJet in Emulation of Print Menu. (See page 74.)
	Auto LF	**Off***/On	ON: CR → CR+LF, OFF: CR → CR
	Auto CR	**Off***/On	ON: LF → LF+CR, FF → FF+CR, or VT → VT+CR OFF: LF → LF, FF → FF, or VT → VT
	Auto WRAP	**Off***/On	Chooses whether a line feed and carriage return will happen when the machine reaches the right margin.
	Auto SKIP	**On***/Off	Chooses whether a line feed and carriage return will happen when the machine position reaches the bottom margin.
	Left Margin	##	Sets the left margin at column 0 to 70 columns at 10 cpi.
	Right Margin	##	Sets the right margin at column 10 to 80 columns at 10 cpi.
	Top Margin	#.##	Sets the top margin at a distance from the top edge of the paper: 0, 0.33, 0.5, 1.0, 1.5 or 2.0 inches. The default setting is 0.5 inches.
	Bottom Margin	#.##	Sets the bottom margin at a distance from the bottom edge of the paper: 0, 0.33, 0.5, 1.0, 1.5 or 2.0 inches. The default setting is 0.5 inches.
	Lines	###	Sets the number of lines on each page from 5 to 128 lines.
BR-Script 3	Error Print	**On***/Off	
	CAPT	**Off***/On	

The factory settings are shown in Bold with an asterisk.

Network for HL-4150CDN users

Submenu	Menu Selections	Options	Descriptions
TCP/IP	Boot Method	**Auto***/Static/RARP/BOOTP/DHCP	Chooses the IP method that best suits your needs.
	IP Address	###.###.###.### **(000.000.000.000)*** [1]	Enter the IP address.
	Subnet Mask	###.###.###.### **(000.000.000.000)*** [1]	Enter the Subnet mask.
	Gateway	###.###.###.### **(000.000.000.000)*** [1]	Enter the Gateway address.
	IP Boot Tries	0/1/2/**3***.../32767	Specifies the number of setting trials when the Boot Method allows automatic IP setting.
	APIPA	**On***/Off	Automatically allocates the IP address from the link-local address range. [1]
	IPv6	**Off***/On	Sets use of IPv6 protocol.
Ethernet		**Auto***/100B-FD/100B-HD/10B-FD/10B-HD	Chooses Ethernet link mode.
Status		Active 100B-FD/ Active 100B-HD/ Active 10B-FD/ Active 10B-HD/ Inactive	Shows Ethernet link status.
MAC Address			Shows MAC address of the machine.
Network Reset	Restores all network settings of the internal print server to the factory default.		
The factory settings are shown in Bold with an asterisk.			

[1] ### means a number within the range of 000 to 255. On connection to the network, if the machine's 'Boot Method' is 'Auto' the machine will attempt to automatically set the IP address and Subnet Mask from a boot server such as DHCP or BOOTP. If a boot server cannot be found, an APIPA IP address will be allocated, such as 169. 254. [001-254]. [000-255]. If the 'Boot Method' of the machine is set to 'Static' you will need to manually enter an IP address from the machine's control panel.

Network for HL-4570CDW users

Submenu 1	Submenu 2	Menu Selections	Options	Descriptions
Wired LAN	TCP/IP	Boot Method	**Auto***/Static/RARP/BOOTP/DHCP	Chooses the IP method that best suits your needs.
		IP Address	###.###.###.### **(000.000.000.000)*** [1]	Enter the IP address.
		Subnet Mask	###.###.###.### **(000.000.000.000)*** [1]	Enter the Subnet mask.
		Gateway	###.###.###.### **(000.000.000.000)*** [1]	Enter the Gateway address.
		IP Boot Tries	0/1/2/**3***.../32767	Specifies the number of setting trials when the Boot Method allows automatic IP setting.
		APIPA	**On***/Off	Automatically allocates the IP address from the link-local address range. [1]
		IPv6	**Off***/On	Sets use of IPv6 protocol.
	Ethernet		**Auto***/100B-FD/100B-HD/10B-FD/10B-HD	Chooses Ethernet link mode.
	Wired Status		Active 100B-FD/ Active 100B-HD/ Active 10B-FD/ Active 10B-HD/ Inactive/Wired OFF	Shows Ethernet link status.
	MAC Address			Shows MAC address of the machine.
	Set to Default	Restores wired network settings of the internal print server to the factory default.		
	Wired Enable		**On***/Off	Chooses Ethernet link mode.

The factory settings are shown in Bold with an asterisk.

Network for HL-4570CDW users (continued)

Submenu 1	Submenu 2	Menu Selections	Options	Descriptions
WLAN	TCP/IP	Boot Method	**Auto***/Static/RARP/BOOTP/DHCP	Chooses the IP method that best suits your needs.
		IP Address	###.###.###.### **(000.000.000.000)*** [1]	Enter the IP address.
		Subnet Mask	###.###.###.### **(000.000.000.000)*** [1]	Enter the Subnet mask.
		Gateway	###.###.###.### **(000.000.000.000)*** [1]	Enter the Gateway address.
		IP Boot Tries	0/1/2/**3***.../32767	Specifies the number of setting trials when the Boot Method allows automatic IP setting.
		APIPA	**On***/Off	Automatically allocates the IP address from the link-local address range. [1]
		IPv6	**Off***/On	Enables or Disables the IPv6 protocol.
	Setup Wizard			Configures the wireless network settings using the setup wizard.
	WPS/AOSS			Configures the wireless network settings using WPS or AOSS™ method.
	WPS w/PIN Code			Configures the wireless network settings using WPS with a PIN code.

The factory settings are shown in Bold with an asterisk.

Network for HL-4570CDW users (continued)

Submenu 1	Submenu 2	Menu Selections	Options	Descriptions
WLAN (continued)	WLAN Status (Appears only when WLAN Enable is On.)	Status		Shows wireless Ethernet link status.
		Signal		Shows the signal condition when Status is Active.
		Channel		Shows the channel in use when Status is Active.
		Speed		Shows the connecting speed when Status is Active.
		SSID		Shows SSID [uses a maximum of 32 digits and characters 0-9, a-z and A-Z in ASCII values]
		Comm. Mode	**Ad-hoc***/Infrastructure	Shows the current Communication Mode.
	MAC Address			Shows MAC address of the machine.
	Set to Default	Restores wireless network settings of the internal print server to the factory default.		
	WLAN Enable		**Off***/On	Turns the wireless interface on or off.
Network Reset	Restores all network settings of the internal print server to the factory default.			
The factory settings are shown in Bold with an asterisk.				

[1] ### means a number within the range of 000 to 255. On connection to the network, if the machine's 'Boot Method' is 'Auto' the machine will attempt to automatically set the IP address and Subnet Mask from a boot server such as DHCP or BOOTP. If a boot server cannot be found, an APIPA IP address will be allocated, such as 169. 254. [001-254]. [000-255]. If the 'Boot Method' of the machine is set to 'Static' you will need to manually enter an IP address from the machine's control panel.

Reset Menu

Display Shows	Description
Network	Restores all network settings of the internal print server to the factory default.
Reset Printer	Resets the machine and restores all printer settings (including command settings) to settings you have previously made with the control panel buttons.
Factory Reset	Resets the machine and restores the printer settings (including command settings) to the factory default settings.
The factory settings are shown in Bold with an asterisk.	

Color Correction

Submenu	Menu Selections	Options	Descriptions
Frequency		**Normal***/Low/Off	Sets the interval time you want to carry out the auto colour correction
ColorCalibration	Calibrate		Carries out calibration to revise the colours. (See *Colour Calibration* on page 83.)
	Reset		Sets the calibration parameters back to the default settings. (See *Colour Calibration* on page 83.)
Auto Regist.	Registration		Adjusts the print position of each colour automatically. (See *Auto Registration* on page 83.)
Manual Regist.	Print Chart		Prints the chart to manually check the registration of the colours. (See *Manual Registration* on page 84.)
	Set Registration	1 Magenta Left 2 Cyan Left 3 Yellow Left 4 Magenta Center 5 Cyan Center 6 Yellow Center 7 Magenta Right 8 Cyan Right 9 Yellow Right	Enter the correction value on the chart you printed from the Print Chart. (See *Manual Registration* on page 84.)
The factory settings are shown in Bold with an asterisk.			

Direct Print

Submenu	Menu Selections	Options	Descriptions
Paper Size		Letter/Legal/**A4***/ Executive/JIS B5/B5/ A5/A5 L/JIS B6/B6/A6/ Folio	Sets the size of paper for direct print.
Media Type		**Plain Paper***/ Thick Paper/ Thicker Paper/ Thin Paper/ Recycled Paper/ Bond Paper/ Glossy Paper	Sets the type of paper for direct print.
Multiple Page		**1in1***/2in1/4in1/9in1/ 16in1/25in1/ 1 in 2x2 pages/ 1 in 3x3 pages/ 1 in 4x4 pages/ 1 in 5x5 pages	Sets the pattern if you want to print multiple pages on a single sheet or one page on multiple sheets.
Orientation		**Portrait***/Landscape	This machine can print pages in portrait or landscape orientation.
Collate		**On***/Off	Sets use of collation printing.
Print Quality		**Normal***/Fine	Sets the quality of print.
PDF Option		**Document***/ Document&Stamps/ Document&Markup	Sets the information you want to add to the document.
Index Print		**Simple***/Details	Sets the format of the index for direct print. If you choose Details, printing time will be longer. (See *Printing data from a USB flash memory drive with direct print* on page 23.)
The factory settings are shown in Bold with an asterisk.			

Default settings

The machine has three levels of default settings; the default settings have been set at the factory before shipment (see *Menu table* on page 71).

- Network default settings
- Factory reset
- Settings reset

Note

- You cannot modify the preset default settings.
- Page counter can never be changed.

Network default settings

If you want to reset only the print server back to its default settings (by resetting all network information such as the password and IP address), follow these steps:

1. Press **+** or **-** to choose `Network`. Press **OK**.
2. Press **+** or **-** to choose `Network Reset`. Press **OK**.
3. Press **+** to choose `Reset`.
4. Press **+** to choose `Yes`. The machine will restart automatically.

Factory Reset

You can partially reset the machine back to its default printer settings. The settings that will not be reset are the `Interface`, `Local Language`, `Reprint`, `Set Registration`, `Setting Lock`, Secure Function Lock 2.0 and the Network settings:

1. Press **+** or **-** to choose `Reset Menu`. Press **OK**.
2. Press **+** or **-** to choose `Factory Reset`. Press **OK**.
3. Press **+** to choose `Reset`.

Settings Reset

This operation will reset all the machine settings back to the settings that were set at the factory:

1. Disconnect the network cable from the machine; otherwise the network settings (such as IP address) will not be reset.
2. Press **+** or **-** to choose `Reset Menu`. Press **OK**.
3. Press **+** and **Cancel** at the same time. Press **OK** after `Settings Reset` appears.
4. Press **+** to choose `Reset`.
5. Press **+** to choose `Yes`. The machine will restart automatically.

Colour Calibration

The output density for each colour may vary depending on the environment the machine is in, such as temperature and humidity. Calibration helps you to improve the colour density.

Note

If you print using the Windows® printer driver, the driver will get the calibration data automatically if both **Use Calibration Data** and **Get Device Data Automatically** are on. The default settings are on. See *Colour Calibration* on page 39.

If you print using the Macintosh printer driver, you need to perform the calibration using the Status Monitor. After turning the Status Monitor on, choose **Color Calibration** from **Control** menu. See *Status Monitor* on page 61 for how to turn the Status Monitor on.

Calibration

1. Press **+** or **-** to choose `Color Correction`. Press **OK**.
2. Press **+** or **-** to choose `ColorCalibration`. Press **OK**.
3. Press **OK** to choose `Calibrate`.
4. Press **+** to choose `Yes`.

Reset

You can reset the calibration parameters back to those set at the factory.

1. Press **+** or **-** to choose `Color Correction`. Press **OK**.
2. Press **+** or **-** to choose `ColorCalibration`. Press **OK**.
3. Press **+** or **-** to choose `Reset`. Press **OK**.
4. Press **+** to choose `Reset`.

Auto Registration

Registration

You can adjust the print position of each colour automatically.

1. Press **+** or **-** to choose `Color Correction`. Press **OK**.
2. Press **+** or **-** to choose `Auto Regist.`. Press **OK**.
3. Press **OK** to choose `Registration`.
4. Press **+** to choose `Yes`.

Manual Registration

When you manually set the colour registration, you need to print the color registration chart. Then you are required to set parameters to the machine in accordance with the instruction of the color registration chart.

Print Chart

You can print the color registration chart to manually check the registration of the colours.

1. Press **+** or **-** to choose `Color Correction`. Press **OK**.
2. Press **+** or **-** to choose `Manual Regist.`. Press **OK**.
3. Press **+** or **-** to choose `Print Chart`. Press **OK**.

Set Registration

You can correct the colour registration manually.

1. Press **+** or **-** to choose `Color Correction`. Press **OK**.
2. Press **+** or **-** to choose `Manual Regist.`. Press **OK**.
3. Press **+** or **-** to choose `Set Registration`. Press **OK**.
4. To set the colour registration, follow the instructions on Color Registration Chart.
5. Press **OK**.

Frequency

You can set how often the colour correction (Colour Calibration and Auto Registration) occurs. Default setting is Normal. The colour correction process consumes some amount of the toner.

1. Press **+** or **-** to choose `Color Correction`. Press **OK**.
2. Press **+** or **-** to choose `Frequency`. Press **OK**.
3. Press **+** or **-** to choose `Normal`, `Low` or `Off`. Press **OK**.

4 Option

This machine has the following optional accessories. You can increase the capabilities of the machine with these items.

Lower tray	**SO-DIMM memory**
LT-300CL	
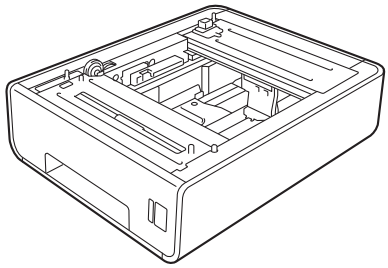	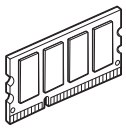
See *Lower tray (LT-300CL)* on this page.	See *SO-DIMM* on page 86.

Lower tray (LT-300CL)

One optional lower tray (Tray 2) can be installed, and the lower tray can hold up to 500 sheets of 80 g/m^2 (21 lb) paper. When the optional tray is installed, the machine can hold up to 800 sheets of plain 80 g/m^2 (21 lb) paper. If you want to buy the optional lower tray unit, call the dealer you bought the machine from or Brother Customer Service.

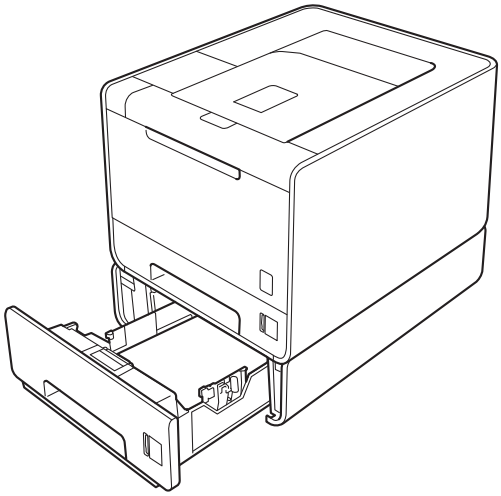

For setup, see the User's Guide that we have supplied with the lower tray unit.

SO-DIMM

The machine has 128 MB of standard memory and one slot for optional memory expansion. You can increase the memory up to a maximum of 384 MB by installing one SO-DIMM (Small Outline Dual In-line Memory Module).

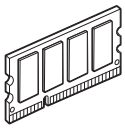

SO-DIMM types

You can install the following SO-DIMMs:

- 128 MB Kingston KTH-LJ2015/128
- 256 MB Kingston KTH-LJ2015/256
- 128 MB Transcend TS128MHP422A
- 256 MB Transcend TS256MHP423A

Note

- For more information, visit the Kingston Technology's website at http://www.kingston.com/.
- For more information, visit the Transcend Information's website at http://www.transcend.com.tw/.

In general, the SO-DIMM must have the following specifications:

Type: 144-pin and 16-bit output

CAS latency: 4

Clock frequency: 267 MHz (533 Mb/s/pin) or more

Capacity: 64, 128 or 256 MB

Height: 30.0 mm (1.18 in.)

DRAM type: DDR2 SDRAM

Note

- There might be some SO-DIMMs that will not work with the machine.
- For more information, call the dealer you bought the machine from or Brother Customer Service.

Installing extra memory

Note

Always turn off the machine power switch before installing or removing the SO-DIMM.

1. Turn off the machine power switch, and then unplug the machine. Disconnect all interface cables from the machine.
2. Remove the plastic (1) and then the metal (2) SO-DIMM covers.

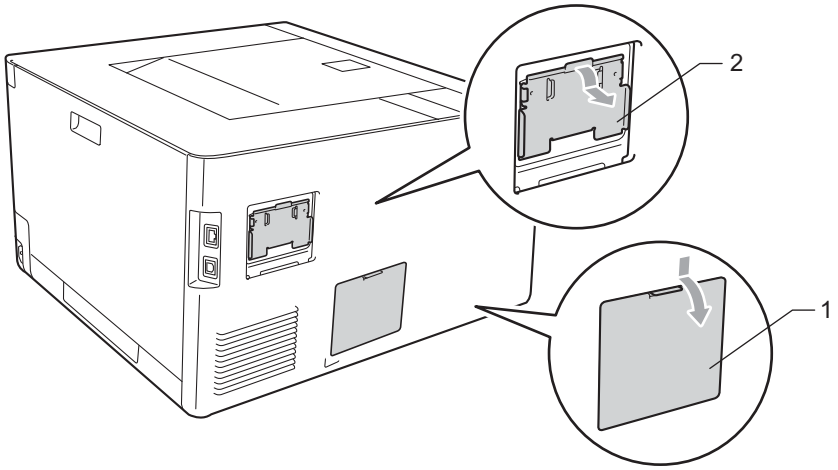

3. Unpack the SO-DIMM and hold it by its edges.

IMPORTANT

To prevent damage to the machine from static electricity, DO NOT touch the memory chips or the board surface.

4. Hold the SO-DIMM by the edges and align the notches in the SO-DIMM with the protrusions in the slot. Insert the SO-DIMM diagonally (1), then tilt it toward the interface board until it clicks into place (2).

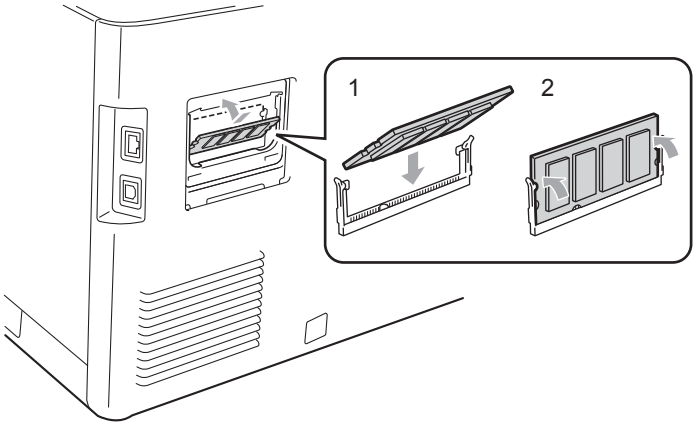

5 Put the metal (2) and then the plastic (1) SO-DIMM covers back on.

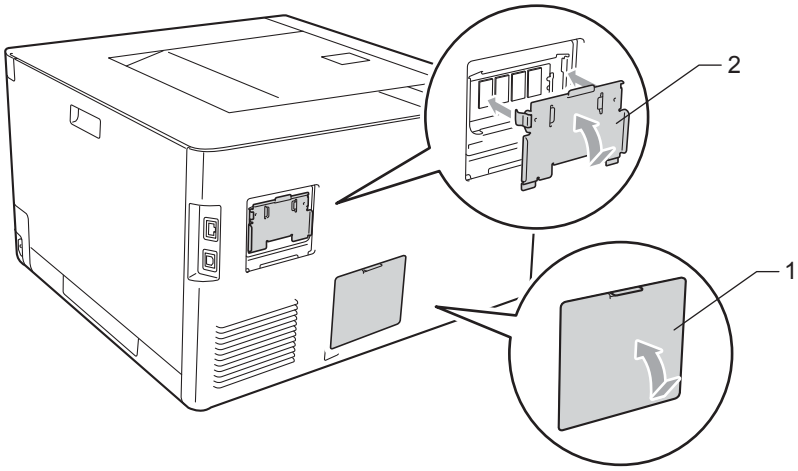

6 Reconnect the interface cable to your machine. Plug the machine back in, and then turn on the power switch.

Note

To make sure that you have installed the SO-DIMM properly, you can print the printer settings page that shows the current memory size. (See *Machine Info.* on page 71.)

5 Routine Maintenance

Replacing consumable items

You will need to replace the consumable items when the machine indicates that the life of the consumable is over. You can replace the following consumable items by yourself:

Toner cartridge	Drum unit
See *Toner cartridges* on page 96. Model Name: TN-340BK, TN-348BK, TN-340C, TN-345C, TN-348C, TN-340M, TN-345M, TN-348M, TN-340Y, TN-345Y, TN-348Y	See *Drum unit* on page 101. Model Name: DR-340CL
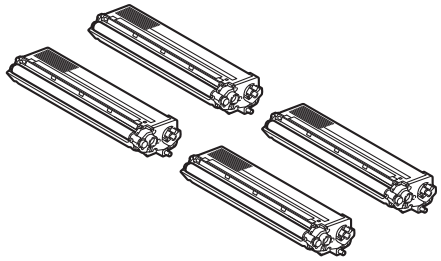	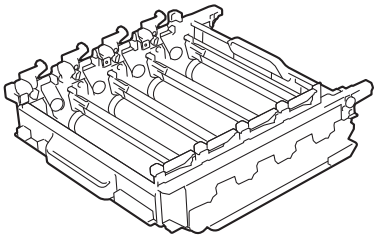
Belt unit	Waste toner box
See *Belt unit* on page 106. Model Name: BU-300CL	See *Waste toner box* on page 110. Model Name: WT-300CL
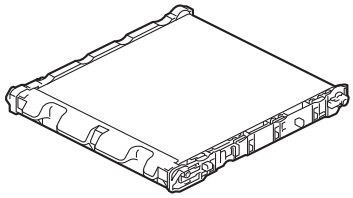	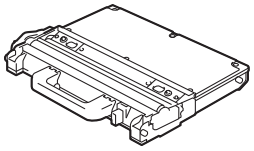

The following messages appear on the LCD in the Ready state. These messages provide advanced warnings to replace the consumable items before they reach the end of their life. To avoid any inconvenience, you may want to buy spare consumable items before the machine stops printing.

LCD messages	Consumable item to replace	Approximate life	How to replace	Model Name
Ready K□ Y■ M■ C■ [5]	Toner cartridge, Black	2,500 pages [1 2 6] 6,000 pages [1 2 8]	See page 97	TN-340BK [6] TN-348BK [8]
Ready K■ Y■ M■ C□ [5]	Toner cartridge, Cyan	1,500 pages [1 2 6] 3,500 pages [1 2 7] 6,000 pages [1 2 8]		TN-340C [6] TN-345C [7] TN-348C [8]
Ready K■ Y■ M□ C■ [5]	Toner cartridge, Magenta			TN-340M [6] TN-345M [7] TN-348M [8]
Ready K■ Y□ M■ C■ [5]	Toner cartridge, Yellow			TN-340Y [6] TN-345Y [7] TN-348Y [8]
Drum End Soon	Drum unit	25,000 pages [1 3 4]	See page 102	DR-340CL
Belt End Soon	Belt unit	50,000 pages [1]	See page 106	BU-300CL
WT Box End Soon	Waste toner box	50,000 pages [1]	See page 110	WT-300CL

[1] A4 or Letter size single-sided pages.

[2] Approx. cartridge yield is declared in accordance with ISO/IEC 19798.

[3] 1 page per job

[4] Drum life is approximate and may vary by type of use.

[5] The □ mark means blinking.

[6] Standard toner cartridge

[7] High capacity cartridge

[8] Super high capacity cartridge

Note

Availability of toner cartridges differs from one country to another. Visit the Brother Solutions Center at http://solutions.brother.com/ or contact your local Brother office for further details.

You will need to clean the machine regularly and replace the consumable items when the following messages are displayed on the LCD.

LCD messages	Consumable item to replace	Approximate life	How to replace	Model Name
Replace Toner <The second line of the LCD> Open the Front Cover, replace Toner Cartridge. Black (K)	Toner cartridge, Black	2,500 pages [1 2 5] 6,000 pages [1 2 7]	See page 97	TN-340BK [5] TN-348BK [7]
Replace Toner <The second line of the LCD> Open the Front Cover, replace Toner Cartridge. Cyan (C)	Toner cartridge, Cyan	1,500 pages [1 2 5] 3,500 pages [1 2 6] 6,000 pages [1 2 7]		TN-340C [5] TN-345C [6] TN-348C [7]
Replace Toner <The second line of the LCD> Open the Front Cover, replace Toner Cartridge. Magenta (M)	Toner cartridge, Magenta			TN-340M [5] TN-345M [6] TN-348M [7]
Replace Toner <The second line of the LCD> Open the Front Cover, replace Toner Cartridge. Yellow (Y)	Toner cartridge, Yellow			TN-340Y [5] TN-345Y [6] TN-348Y [7]
Replace Drum	Drum unit	25,000 pages [1 3 4]	See page 102	DR-340CL
Drum Stop	Drum unit	25,000 pages [1 3 4]	See page 102	DR-340CL
Replace Belt	Belt unit	50,000 pages [1]	See page 106	BU-300CL
Replace WT Box <The second line of the LCD> Replace the Waste Toner Box. Refer to the User's Guide for instructions.	Waste toner box	50,000 pages [1]	See page 110	WT-300CL

LCD messages	Consumable item to replace	Approximate life	How to replace	Model Name
Replace Fuser	Fuser unit	100,000 pages [1]	Call your dealer or Brother Customer Service for a replacement fuser unit.	
Replace PF KitMP	Paper feeding kit	50,000 pages [1]	Call your dealer or Brother Customer Service for a replacement PF kit MP.	
Replace PF Kit1	Paper feeding kit	100,000 pages [1]	Call your dealer or Brother Customer Service for a replacement PF kit1.	
Replace PF Kit2	Paper feeding kit	100,000 pages [1]	Call your dealer or Brother Customer Service for a replacement PF kit2.	
Replace Laser	Laser unit	100,000 pages [1]	Call your dealer or Brother Customer Service for a replacement laser unit.	

[1] A4 or Letter size single-sided pages.

[2] Approx. cartridge yield is declared in accordance with ISO/IEC 19798.

[3] 1 page per job

[4] Drum life is approximate and may vary by type of use.

[5] Standard toner cartridge

[6] High capacity cartridge

[7] Super high capacity cartridge

Note

- Discard used consumable items according to local regulations, keeping it separate from domestic waste. If you have questions, call your local waste disposal office. Be sure to reseal the consumable items tightly so that the material inside does not spill.
- We recommend placing used consumable items on a piece of paper to prevent accidentally spilling or scattering the material inside.
- If you use paper that is not a direct equivalent for the recommended paper, the life of consumable items and machine parts may be reduced.
- The projected life for each of toner cartridges and a waste toner box is based on ISO/IEC 19798. Frequency of replacement will vary depending on the complexity of printed pages, percentage of coverage and type of media used.
- Availability of toner cartridges differs from one country to another. Visit the Brother Solutions Center at http://solutions.brother.com/ or contact your local Brother office for further details.

Before replacing the consumable items

Please read the following instructions before replacing the consumable items.

WARNING

DO NOT put a toner cartridge and waste toner box into a fire. It could explode, resulting in injuries.

DO NOT use flammable substances, any type of spray or any organic solvent/liquids containing alcohol or ammonia to clean the inside or outside of the machine. Doing this may cause a fire or electrical shock. See *Cleaning* on page 115 for how to clean the machine.

Be careful not to inhale toner.

IMPORTANT

- Brother machines are designed to work with toner of a particular specification and will work to a level of optimum performance when used with genuine Brother branded toner cartridges. Brother cannot guarantee this optimum performance if toner or toner cartridges of other specifications are used. Brother does not therefore recommend the use of cartridges other than genuine Brother branded cartridges with this machine.

  If damage is caused to the drum unit or other part of this machine as a result of using other manufacturer's products with this machine, any repairs required as a result may not be covered by the warranty.
- Put the toner cartridge in the drum unit immediately after you have removed the protective cover. To prevent any degradation to the print quality, DO NOT touch the shaded parts shown in the illustration.

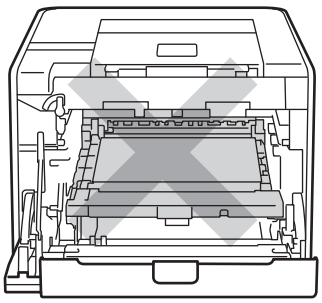

Inside the machine (Front View)

- Hold the green handles of the drum unit when you carry it. DO NOT hold the sides of the drum unit.

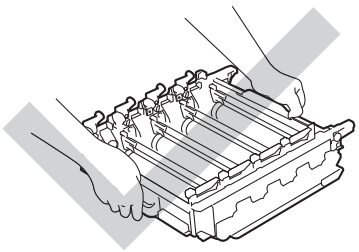

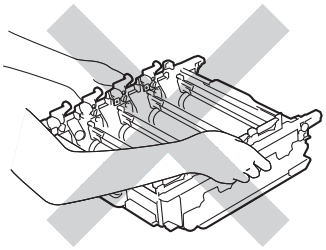

- We recommend that you place the drum unit and/or toner cartridge on a clean, flat surface with a piece of disposable paper underneath it in case you accidentally spill or scatter toner.
- Handle the toner cartridge and the waste toner box carefully. If toner scatters on your hands or clothes, wipe or wash it off with cold water at once.
- To prevent damage to the machine from static electricity, DO NOT touch the electrodes shown in the illustration.

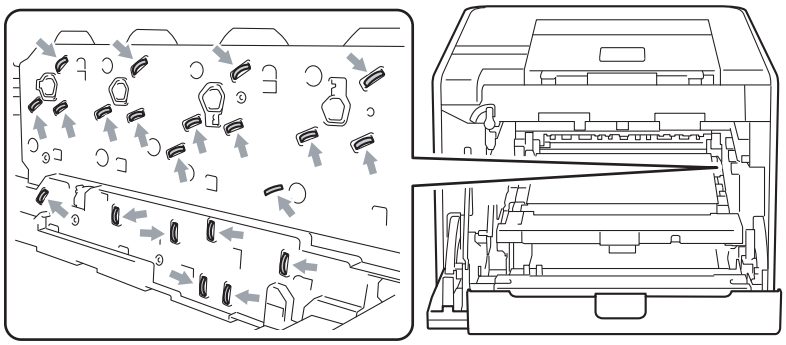

- To avoid print quality problems, DO NOT touch the shaded parts shown in the illustrations.

<Toner cartridge>

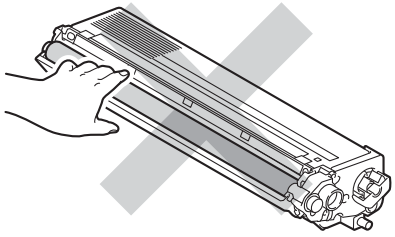

<Drum unit>

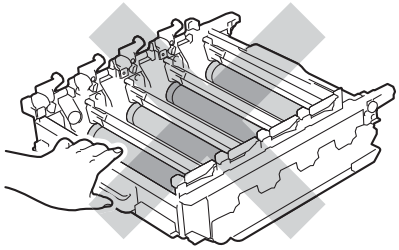

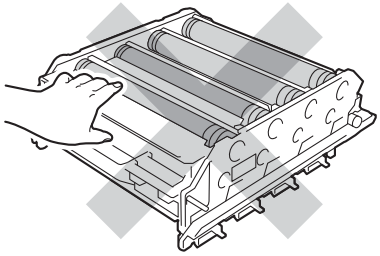

<Belt unit>

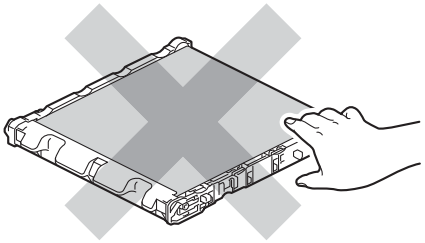

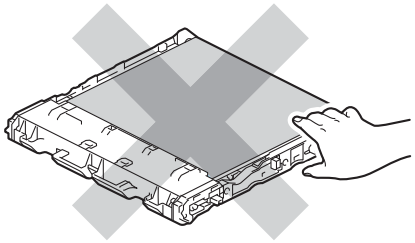

- We recommend that you clean the machine when you replace the consumables. See *Cleaning* on page 115.
- DO NOT unpack a spare toner cartridge until immediately before you put it into the machine. If toner cartridges are left unpacked for a long time the toner life may be shortened.
- DO NOT unpack a spare drum unit until immediately before you put it into the machine. If drum unit is exposed to sunlight or room light the unit may be damaged.
- While removing the drum unit, handle it carefully because it may contain toner.

Note

- Be sure to seal up the toner cartridge tightly in a suitable bag so that toner powder does not spill out of the cartridge.
- Discard the used toner cartridge according to local regulations, keeping it separate from domestic waste. If you have questions, call your local waste disposal office.
- Discard the used waste toner box according to local regulations, keeping it separate from domestic waste. If you have questions, call your local waste disposal office.
- To ensure high quality printing, we recommend that you use only genuine Brother toner cartridges. When you want to buy toner cartridges, call your dealer.

Toner cartridges

Model Name: For the model name of toner cartridges, See *Replacing consumable items* on page 89.

A new standard toner cartridge can print approximately 2,500 pages (black) or approximately 1,500 pages (yellow, magenta, cyan) [1].

For approximate life of high capacity toner cartridges and super high capacity toner cartridges, See *Replacing consumable items* on page 89.

Note

- The toner cartridges that come supplied with the machine are standard toner cartridges.
- The amount of toner used varies according to what is printed on the page and the print density setting.
- If you change the print density setting for lighter or darker printing, the amount of toner used will change.

[1] A4 / Letter size single-sided pages. Approx. cartridge yield is declared in accordance with ISO/IEC 19798.

Toner Low message

```
Ready
  K■ Y■ M□ C□
```

The ■ and □ marks indicate status of each toner cartridge, Black (K), Yellow (Y), Magenta (M) and Cyan (C) (where □ means blinking). When a mark blinks (□), the indicated toner cartridge is near the end of its life.

Replace Toner message

When the following message appears on the LCD, you need to replace the toner cartridge.

```
Replace Toner
Open the Front C
```

The second line of the LCD indicates which colour you need to replace.

The machine will stop printing until you replace the toner cartridge. A new and unused original Brother toner cartridge will reset the Replace Toner mode.

Replacing the toner cartridges

Before you replace the toner cartridges, see *Before replacing the consumable items* on page 93.

1. Make sure that the machine is turned on. Press the front cover release button and then open the front cover.

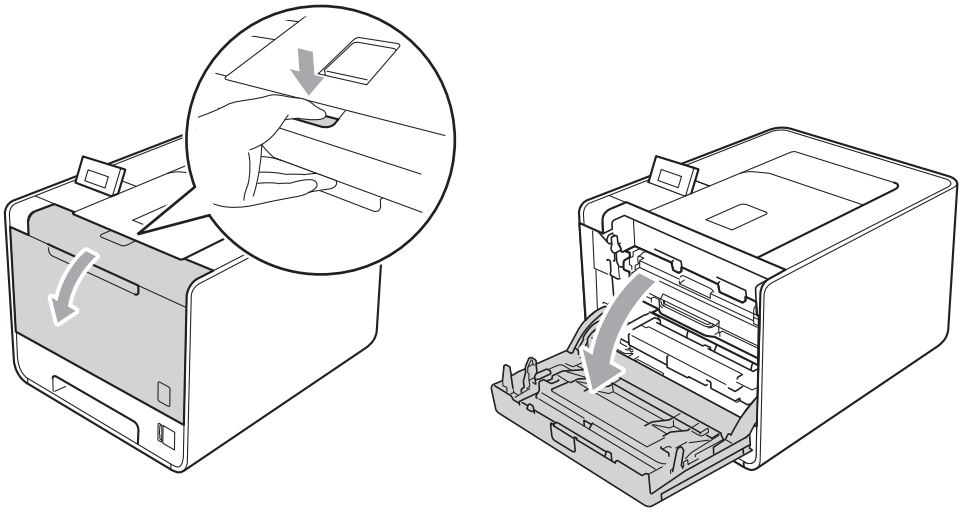

2. Hold the green handle of the drum unit. Pull the drum unit out until it stops.

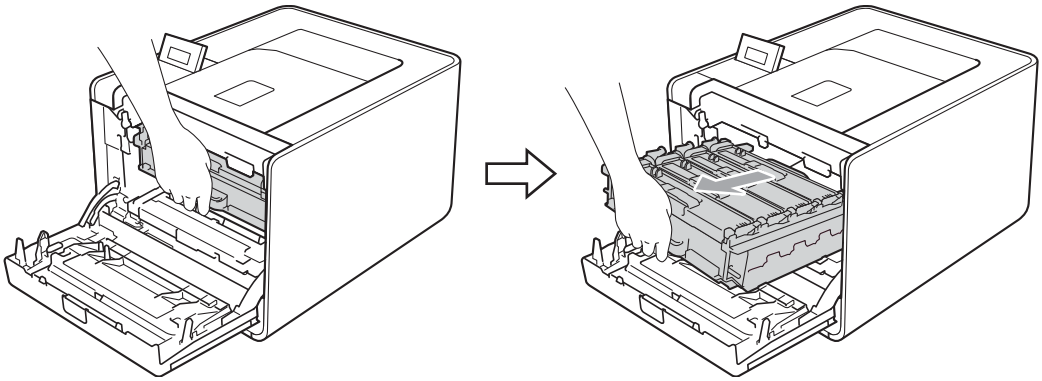

3. Hold the handle of the toner cartridge and slightly push it toward the machine to unlock it. Then pull it out of the drum unit. Repeat this for all the toner cartridges.

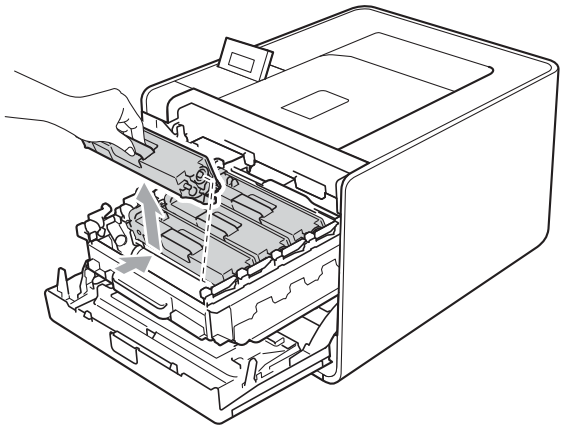

4 Push to release the latches of the corona wire cover (1), and then open the cover.

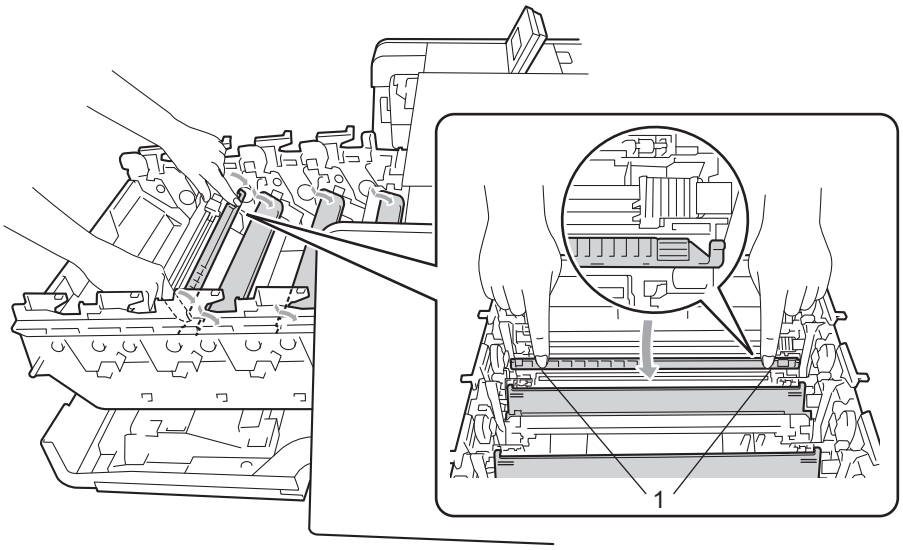

5 Clean the corona wire inside the drum unit by gently sliding the green tab from left to right and right to left several times.

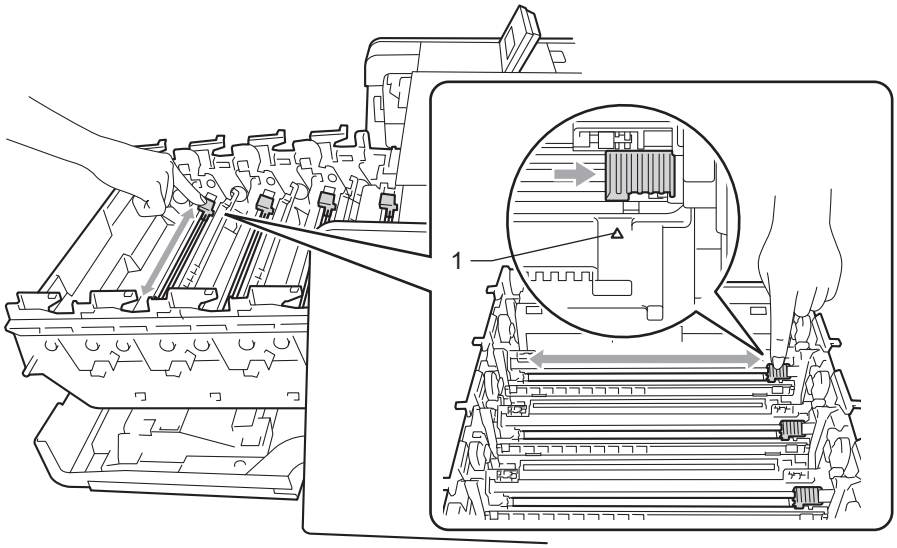

Note

Be sure to return the tab to the home position (▲) (1). If you do not, printed pages may have a vertical stripe.

6 Close the corona wire cover.

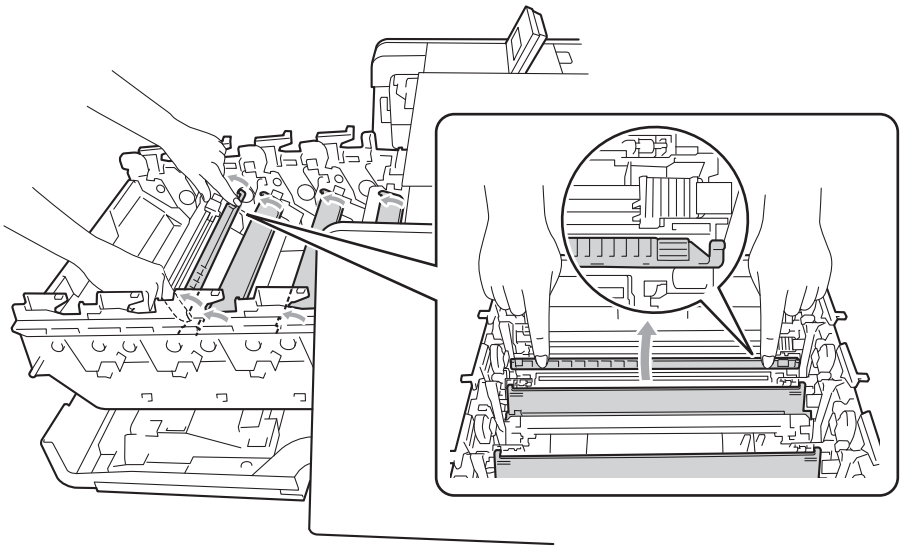

7 Repeat steps ❹ to ❻ to clean each of three remaining corona wires.

8 Unpack the new toner cartridge. Gently shake it from side to side several times to distribute the toner evenly inside the cartridge.

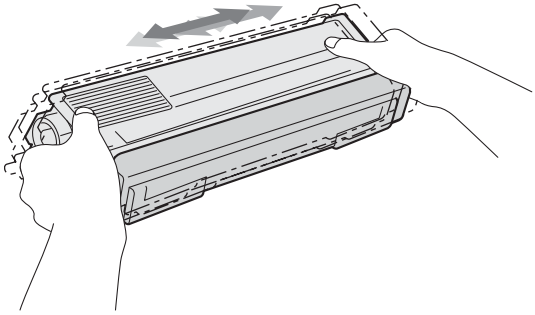

9 Pull off the protective cover.

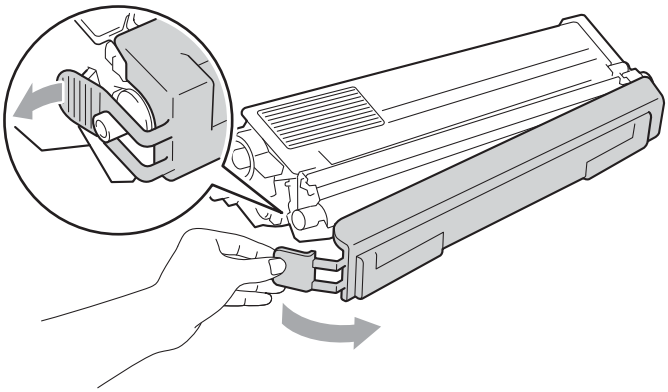

10 Hold the handle of the toner cartridge and slide the toner cartridge into the drum unit then slightly pull it toward you until you hear it click into place. Make sure that you match the toner cartridge colour to the same colour label on the drum unit. Repeat this for all the toner cartridges.

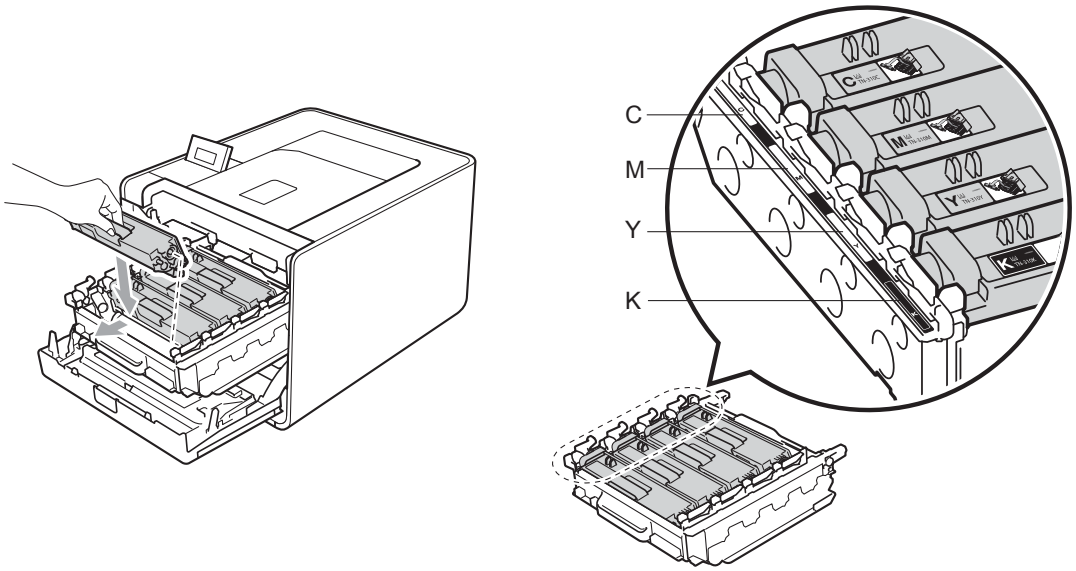

C - Cyan

M - Magenta

Y - Yellow

K - Black

11 Push the drum unit in until it stops.

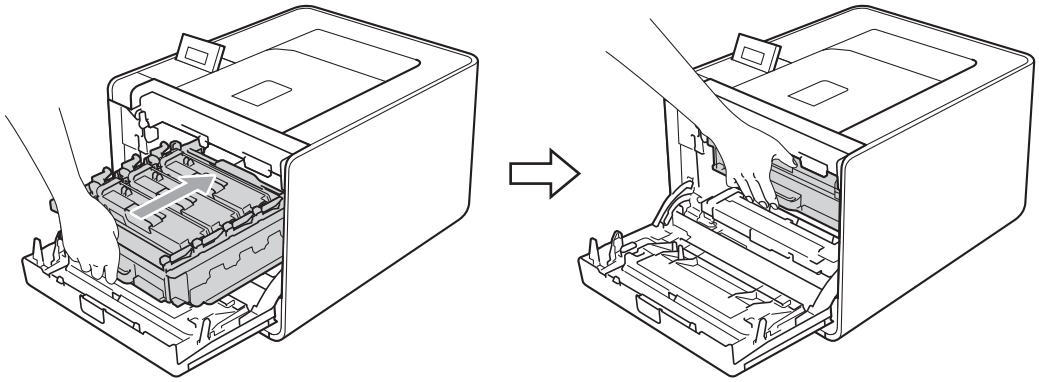

12 Close the front cover of the machine.

Note

After replacing the toner cartridge, DO NOT turn off the machine power switch or open the front cover until the LCD shows `Ready`.

Drum unit

Model Name: DR-340CL

A new drum unit can print approximately 25,000 A4 or Letter size single-sided pages.

Note

- There are many factors that determine the actual drum life, such as the temperature, humidity, type of paper, type of toner used and so on. Under ideal conditions, the average drum life is estimated at approximately 25,000 pages. The actual number of pages that your drum will print may be significantly less than this estimate. Because we have no control over the many factors that determine the actual drum life, we cannot guarantee a minimum number of pages that will be printed by your drum.
- For best performance, use only genuine Brother toner. The machine should be used only in a clean, dust-free environment with adequate ventilation.
- Printing with a third-party drum unit may reduce not only the print quality but also the quality and life of the machine itself. Warranty coverage does not apply to problems caused by the use of a third-party drum unit.

Drum Error message

```
Drum Error
```

The corona wires have become dirty. Clean the corona wires in the drum unit. (See *Cleaning the corona wires* on page 121.)

If you cleaned the corona wires and `Drum Error` was not cleared then the drum unit is at the end of its life. Replace the drum unit with a new one.

Drum End Soon message

```
Drum End Soon
```

The drum unit is nearing the end of its rated life and will require replacement. We recommend you keep a genuine Brother drum unit ready for installation.

Clean the corona wires in the drum unit. If you don't, printed pages may have a vertical stripe or `Drum Error` may occur. (See *Cleaning the corona wires* on page 121.)

Replace Drum message

```
Replace Drum
```

The drum unit has exceeded its rated life. Please replace the drum unit with a new one. We recommend a genuine Brother drum unit be installed at this time.

After replacement, reset the drum counter by following the instructions included with the new drum unit.

Drum Stop message

```
Drum Stop
```

We cannot guarantee the print quality. Please replace the drum unit with a new one. We recommend a genuine Brother drum unit be installed at this time.

After replacement, reset the drum counter by following the instructions included with the new drum unit.

Replacing the drum unit

Before you replace the drum unit, see *Before replacing the consumable items* on page 93.

1. Make sure that the machine is turned on. Press the front cover release button and then open the front cover.

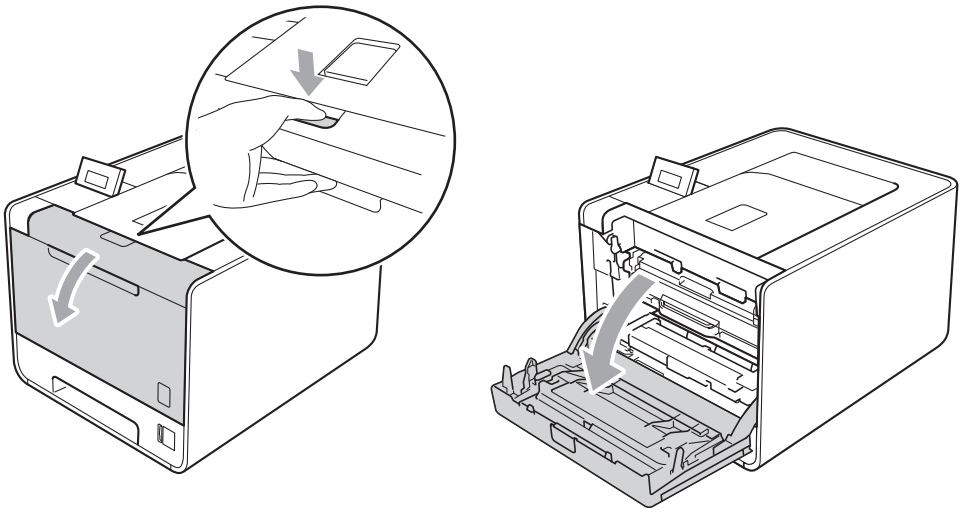

2. Hold the green handle of the drum unit. Pull the drum unit out until it stops.

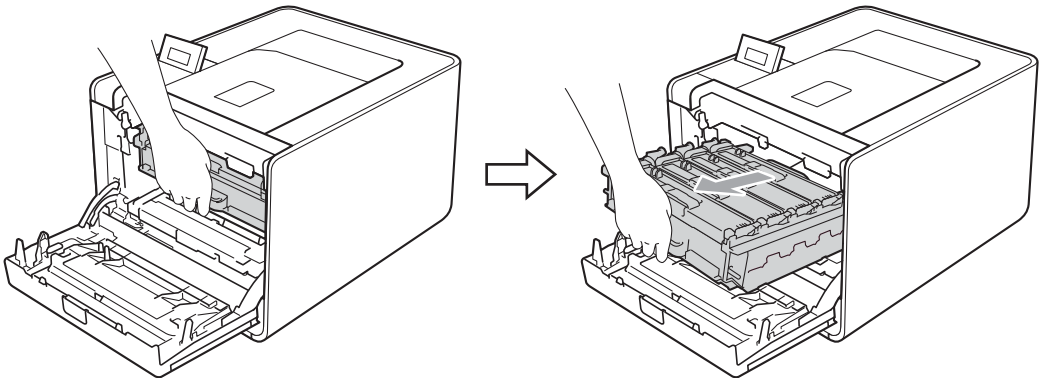

3 Turn the green lock lever (1) at the left of the machine counterclockwise to the release position. Holding the green handles of the drum unit, lift the front of the drum unit and remove it from the machine.

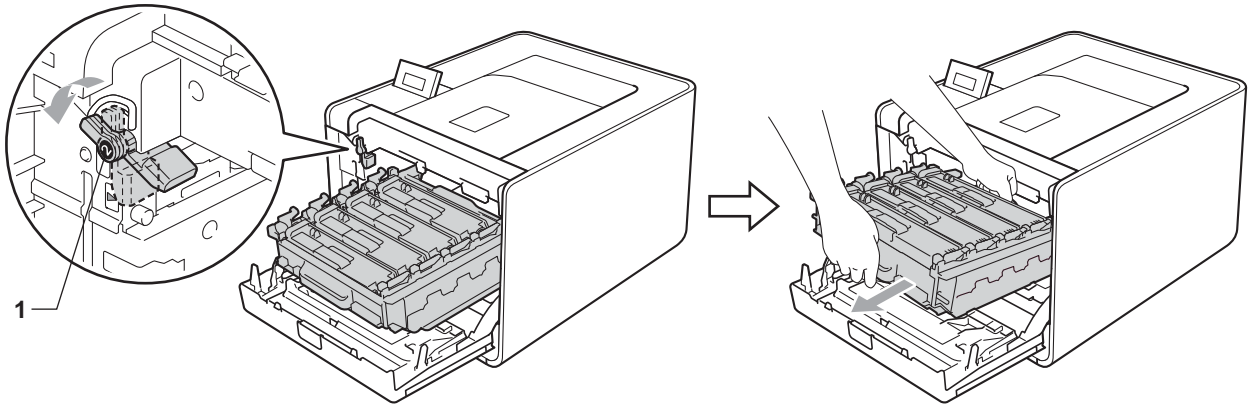

4 Hold the handle of the toner cartridge and slightly push it to unlock. Then pull it out of the drum unit. Repeat this for all the toner cartridges.

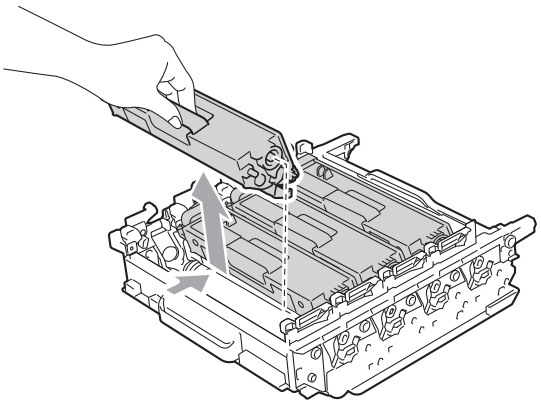

5 Unpack the new drum unit and remove the protective cover.

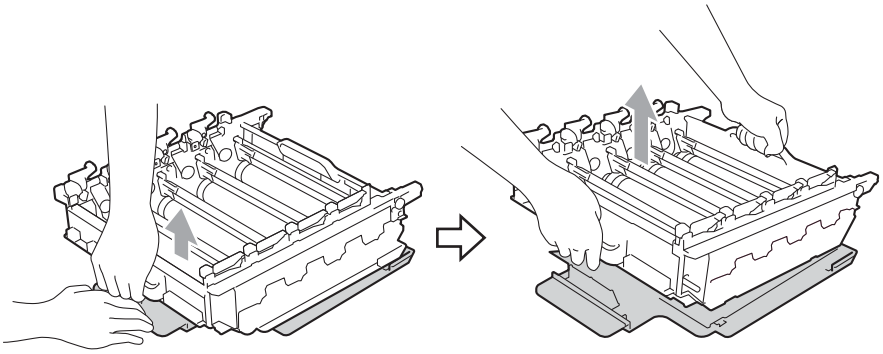

6 Hold the handle of the toner cartridge and slide it into the appropriate coloured section of the drum unit until it clicks into place.

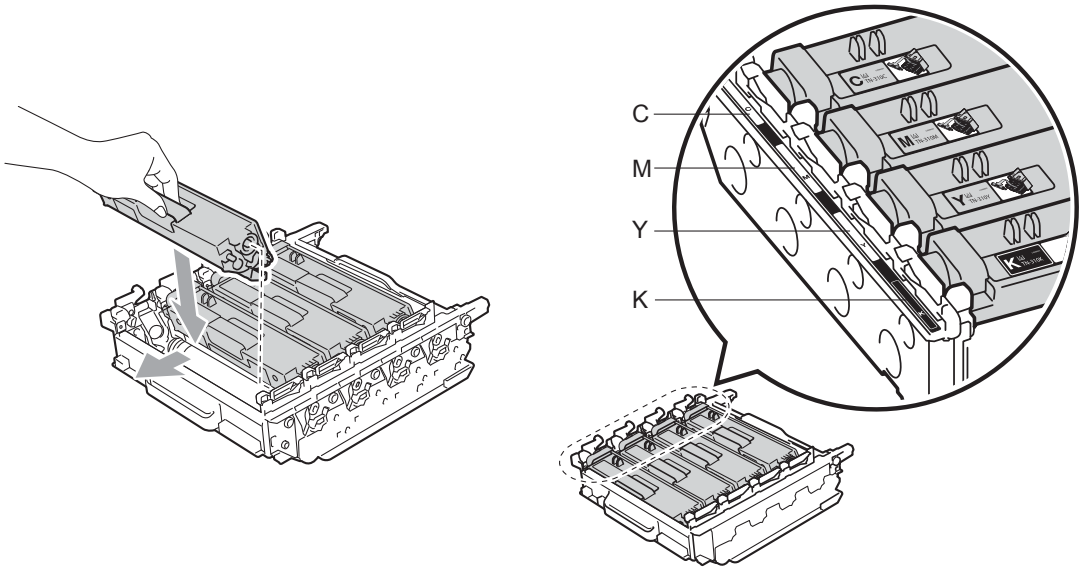

C - Cyan
M - Magenta
Y - Yellow
K - Black

7 Make sure the green lock lever (1) is in the release position as shown in the illustration.

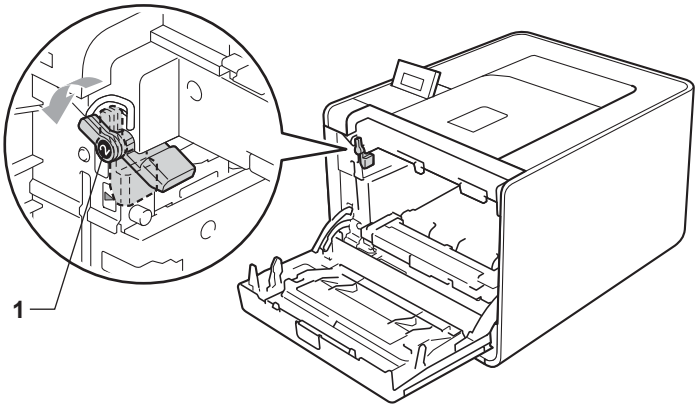

8 Match the guide ends (2) of the drum unit to the ▶ marks (1) on both sides of the machine, then gently slide the drum unit into the machine until it stops at the green lock lever.

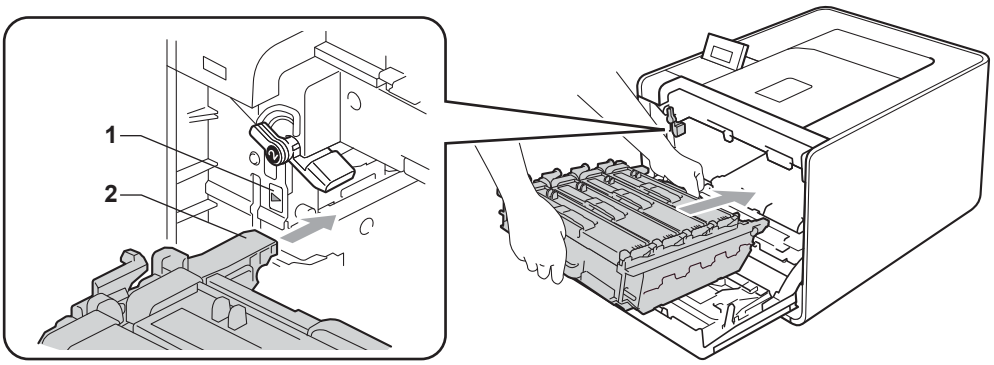

9 Turn the green lock lever (1) clockwise to the lock position.

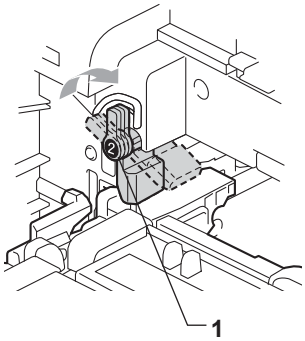

10 Push the drum unit in until it stops.

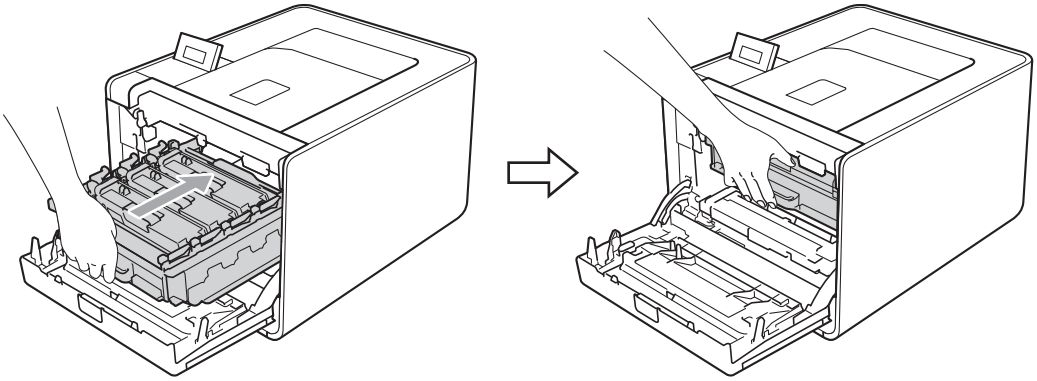

11 Close the front cover of the machine.

When you replace the drum unit with a new one, you need to reset the drum counter by completing the following steps:

1 Press **+** or **-** to choose `Machine Info.`. Press **OK**.

2 Press **+** or **-** to choose `Reset Parts Life`. Press **OK**.

3 Press **+** to choose `Drum Unit`. Press **OK**.

4 Press **+** to reset the drum unit counter.

Belt unit

Model Name: BU-300CL

A new belt unit can print approximately 50,000 size single-sided pages.

Belt End Soon message

```
Belt End Soon
```

If the LCD shows `Belt End Soon`, it means the belt unit is near the end of its life. Buy a new belt unit and have it ready before you get a `Replace Belt` message.

Replace Belt message

When the following message appears on the LCD, you need to replace the belt unit.

```
Replace Belt
```

IMPORTANT

Damage caused by incorrect handling of the belt unit may void your warranty.

Replacing the belt unit

Before you replace the belt unit, see *Before replacing the consumable items* on page 93.

1. Make sure that the machine is turned on. Press the front cover release button and then open the front cover.

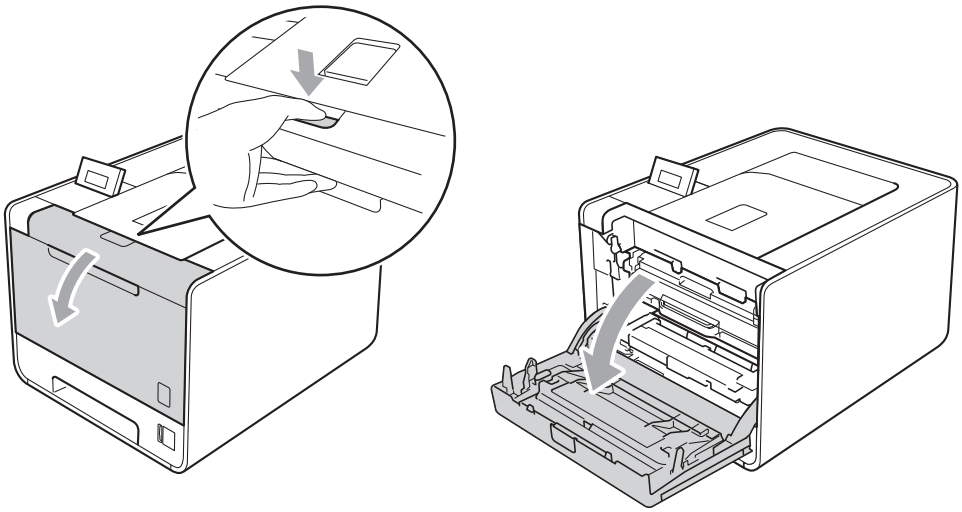

2 Hold the green handle of the drum unit. Pull the drum unit out until it stops.

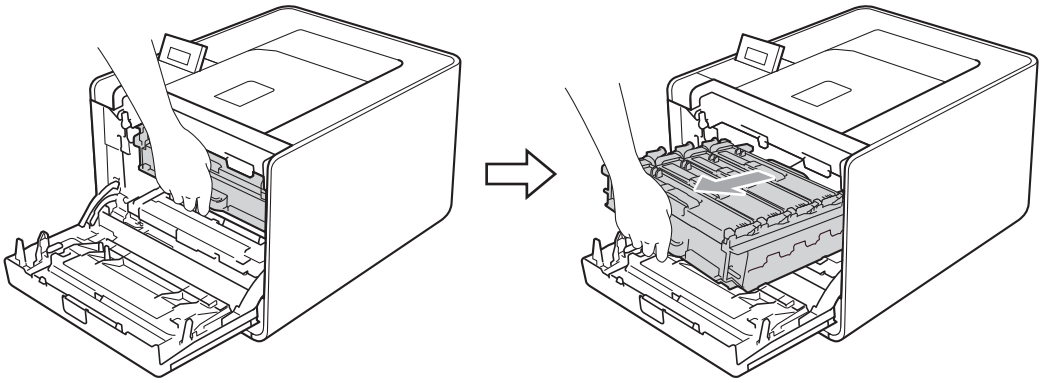

3 Turn the green lock lever (1) at the left of the machine counterclockwise to the release position. Holding the green handles of the drum unit, lift the front of the drum unit and remove it from the machine.

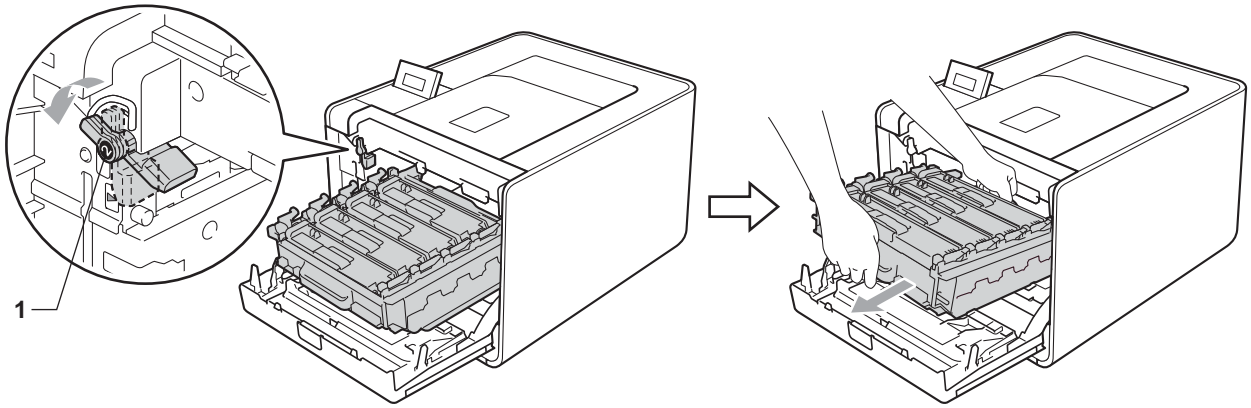

4 Hold the green handle of the belt unit with both hands and lift the belt unit up, then pull it out.

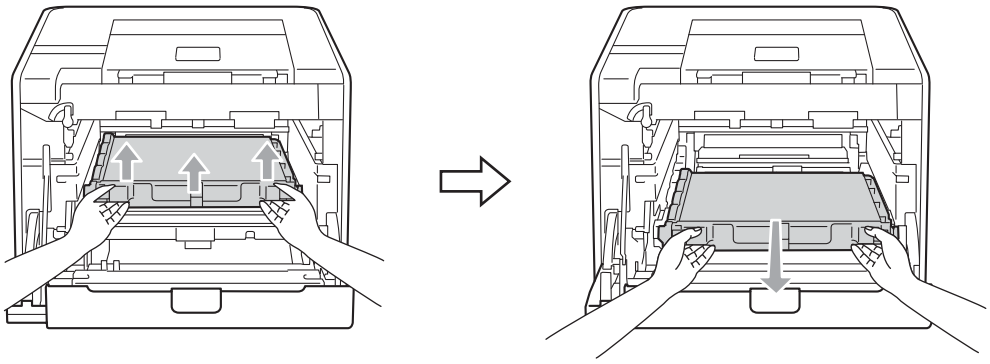

5 Unpack the new belt unit and put the new belt unit in the machine. Make sure the belt unit is level and fits firmly into place.

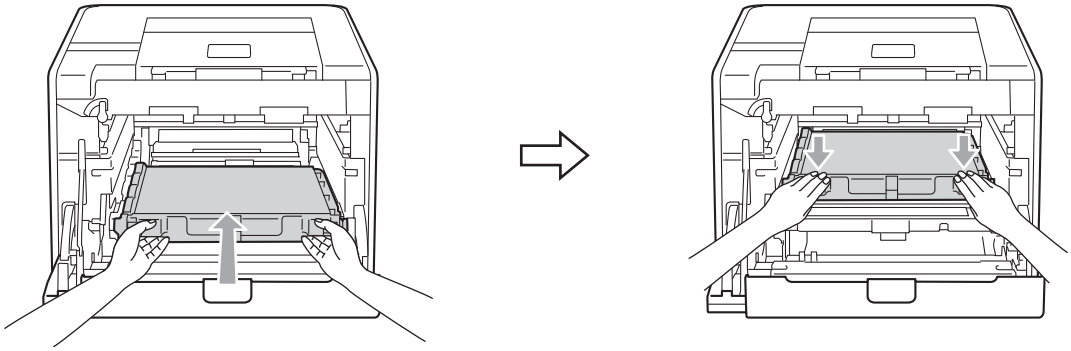

6 Make sure the green lock lever (1) is in the release position as shown in the illustration.

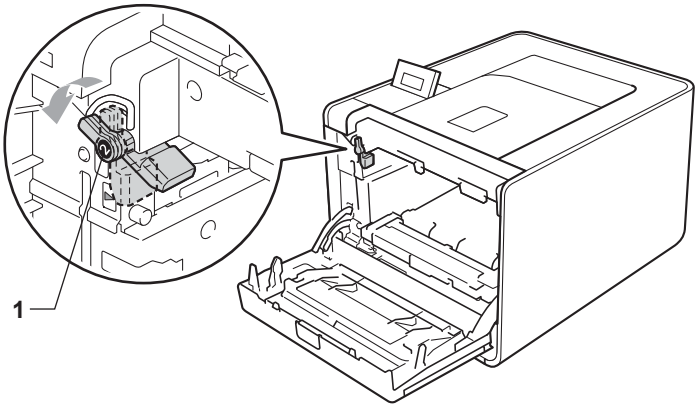

7 Match the guide ends (2) of the drum unit to the ▶ marks (1) on both sides of the machine, then gently slide the drum unit into the machine until it stops at the green lock lever.

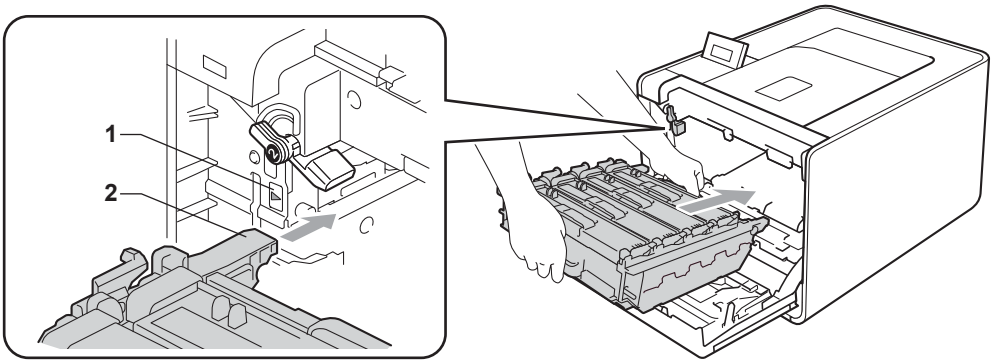

8 Turn the green lock lever (1) clockwise to the lock position.

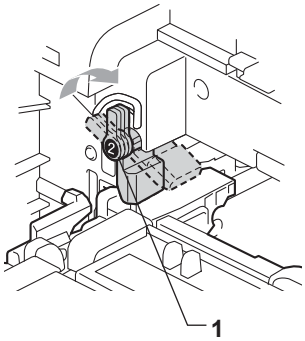

9 Push the drum unit in until it stops.

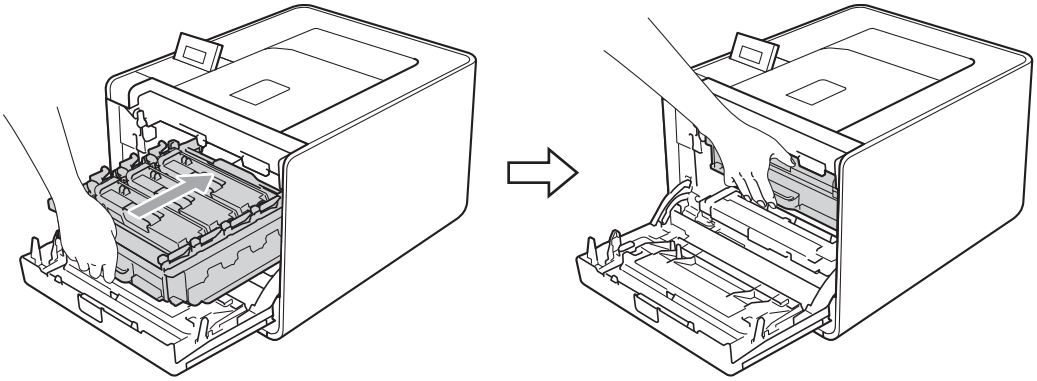

10 Close the front cover of the machine.

When you replace the belt unit with a new one, you need to reset the belt unit counter by completing the following steps:

1 Press **+** or **-** to choose `Machine Info.`. Press **OK**.

2 Press **+** or **-** to choose `Reset Parts Life`. Press **OK**.

3 Press **+** or **-** to choose `Belt Unit`. Press **OK**.

4 Press **+** to reset the belt unit counter.

Waste toner box

Model Name: WT-300CL

The life of a waste toner box is approximately 50,000 A4 or Letter size single-sided pages.

WT Box End Soon message

```
WT Box End Soon
```

If the LCD shows `WT Box End Soon`, it means the waste toner box is near the end of its life. Buy a new waste toner box and have it ready before you get a `Replace WT Box` message.

Replace WT Box message

When the following message appears on the LCD, you need to replace the waste toner box.

```
Replace WT Box
```

IMPORTANT

DO NOT reuse the waste toner box.

Replacing the waste toner box

Before you replace the waste toner box, see *Before replacing the consumable items* on page 93.

1. Make sure that the machine is turned on. Press the front cover release button and then open the front cover.

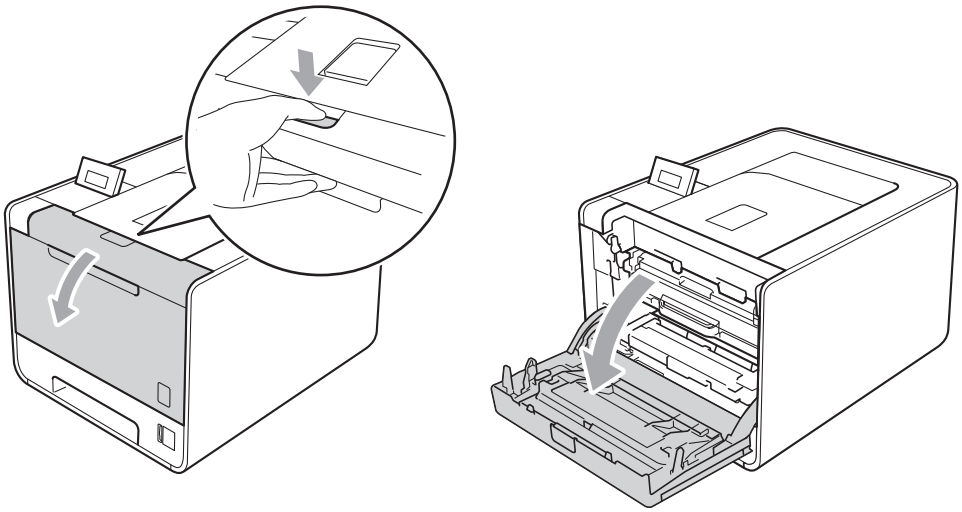

2 Hold the green handle of the drum unit. Pull the drum unit out until it stops.

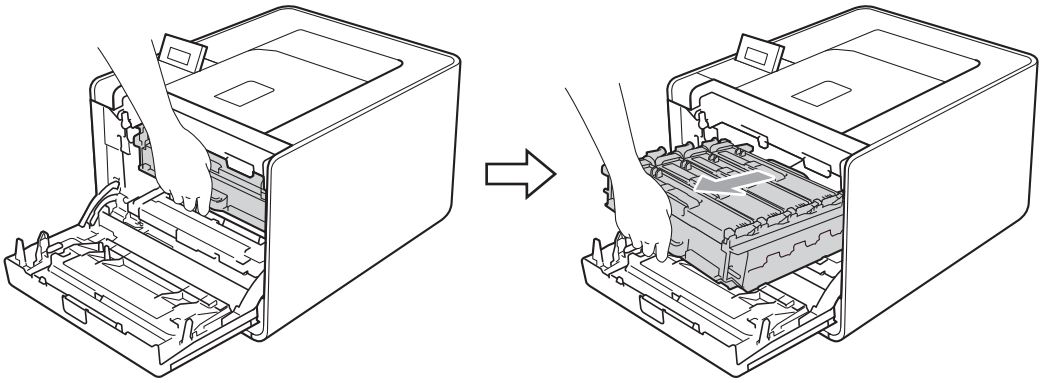

3 Turn the green lock lever (1) at the left of the machine counterclockwise to the release position. Holding the green handles of the drum unit, lift the front of the drum unit and remove it from the machine.

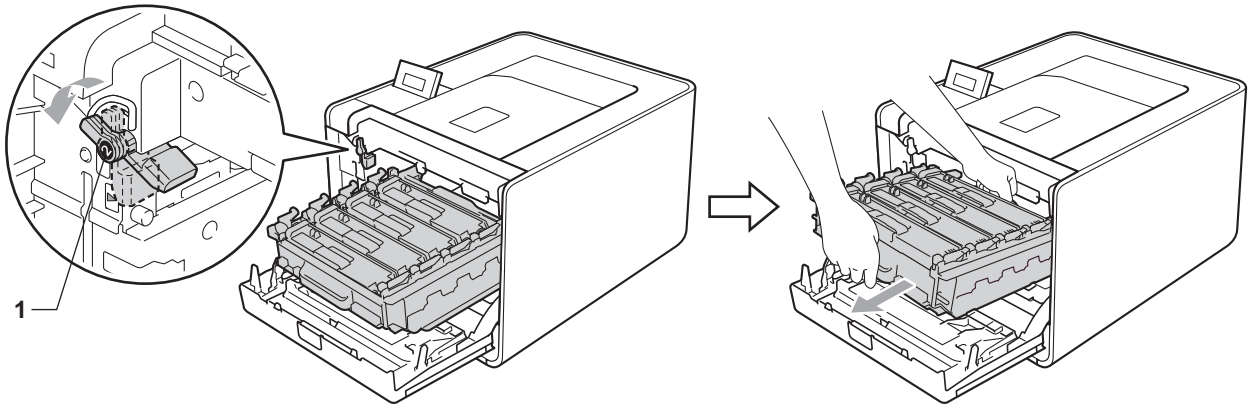

4 Hold the green handle of the belt unit with both hands and lift the belt unit up, then pull it out.

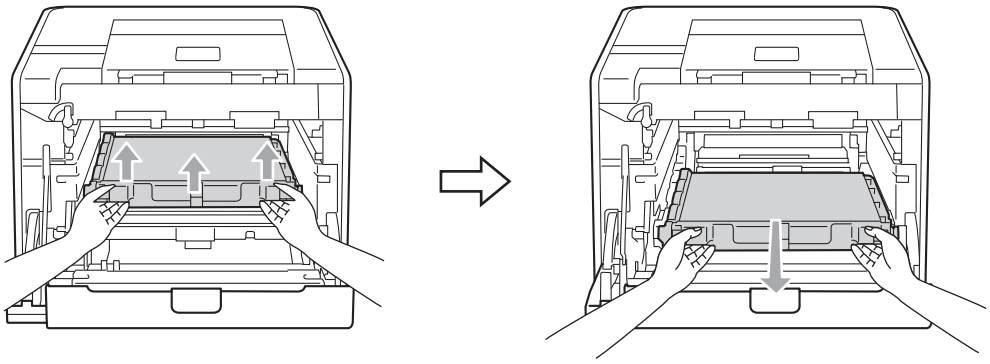

5 Remove two pieces of orange packing material and discard them.

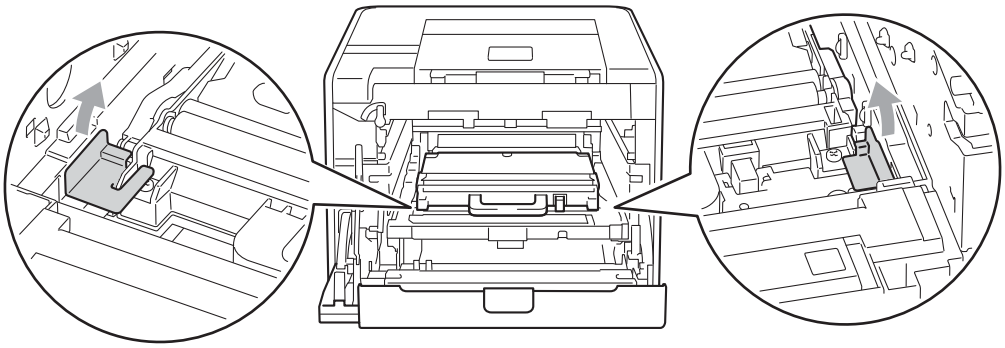

Note

This step is only necessary when you are replacing the waste toner box for the first time, and is not required for the replacement waste toner box. The orange packing pieces are installed at the factory to protect your machine during shipment.

6 Remove the waste toner box from the machine using the green handle.

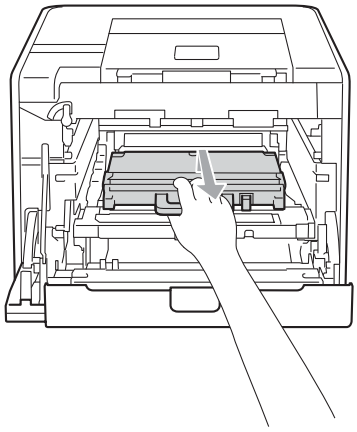

7 Unpack the new waste toner box and put the new waste toner box in the machine using the green handle. Make sure the waste toner box is level and fits firmly into place.

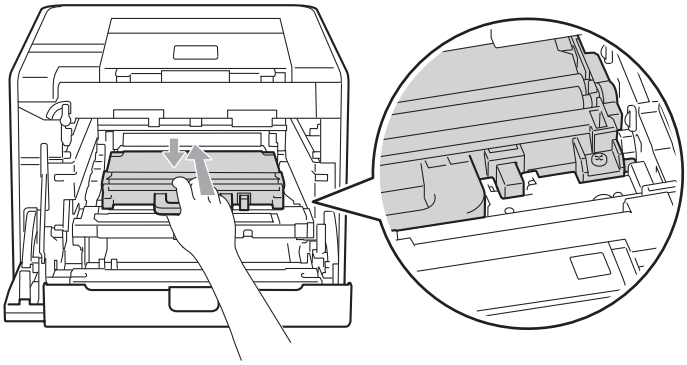

8 Slide the belt unit back into the machine. Make sure the belt unit is level and fits firmly into place.

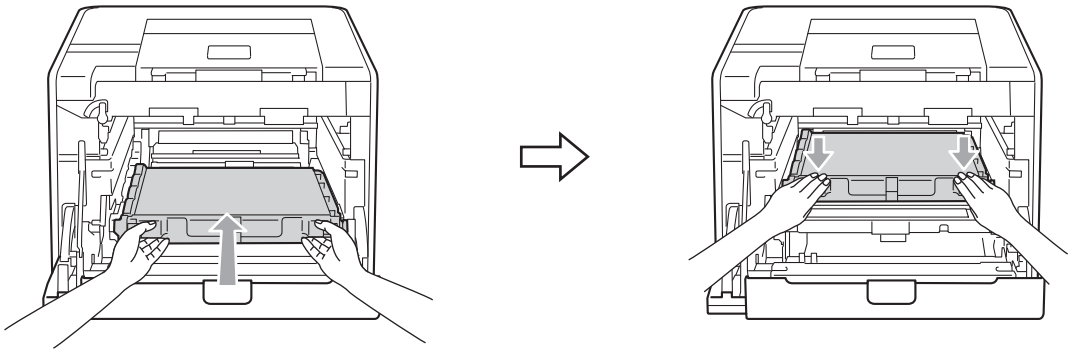

9 Make sure the green lock lever (1) is in the release position as shown in the illustration.

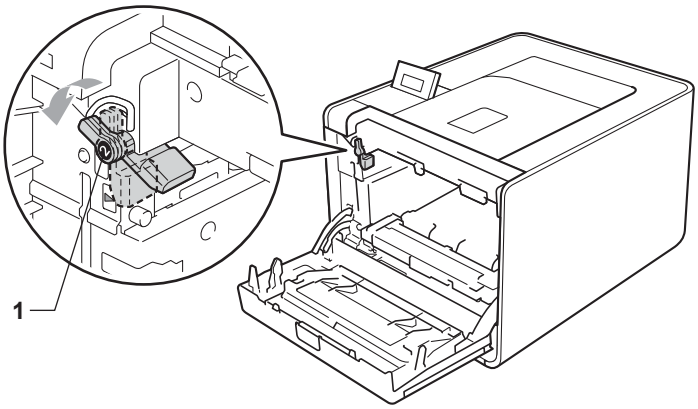

10 Match the guide ends (2) of the drum unit to the ▶ marks (1) on both sides of the machine, then gently slide the drum unit into the machine until it stops at the green lock lever.

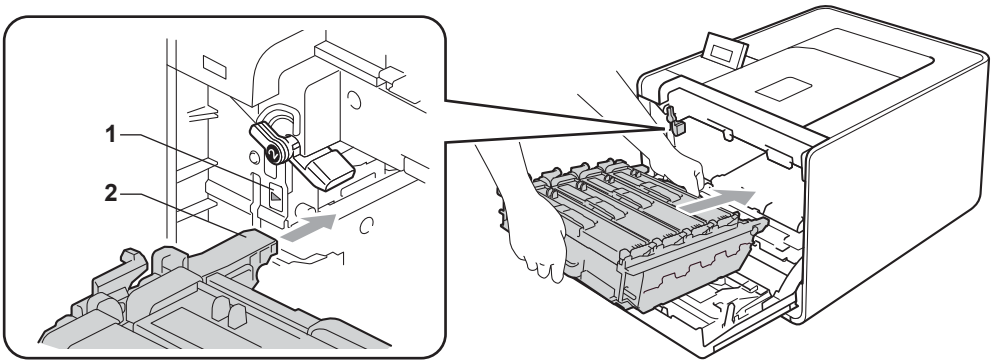

11 Turn the green lock lever (1) clockwise to the lock position.

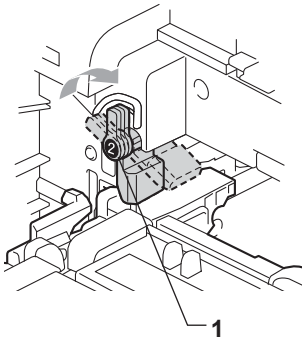

12 Push the drum unit in until it stops.

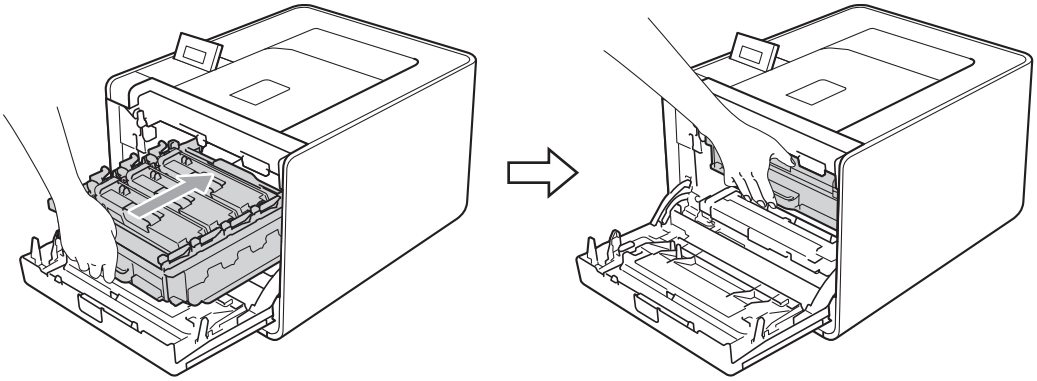

13 Close the front cover of the machine.

Cleaning

Clean the outside and inside of the machine regularly with a dry, lint-free cloth. When you replace the toner cartridge or the drum unit, make sure that you clean the inside of the machine. If printed pages are stained with toner, clean the inside of the machine with a dry, lint-free cloth.

WARNING

DO NOT use flammable substances, any type of spray or any organic solvent/liquids containing alcohol or ammonia to clean the inside or outside of the machine.

Be careful not to inhale toner.

IMPORTANT

Use neutral detergents. Cleaning with volatile liquids such as thinner or benzine will damage the surface of the machine.

Cleaning the outside of the machine

1. Turn off the machine's power switch. Disconnect all interface cables, and then unplug the AC power cord.
2. Pull the paper tray completely out of the machine.

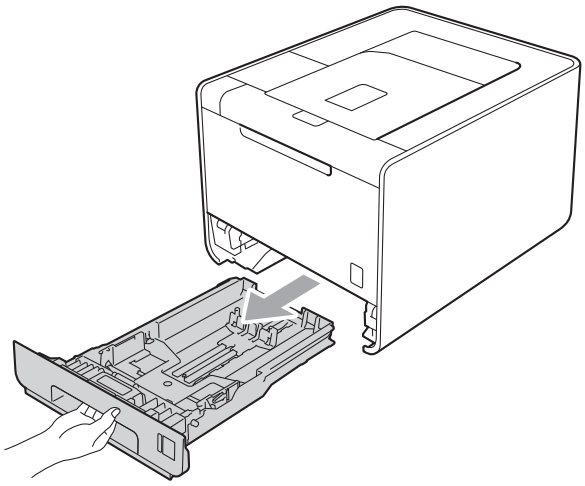

3 Wipe the outside of the machine with a dry, lint-free cloth to remove dust.

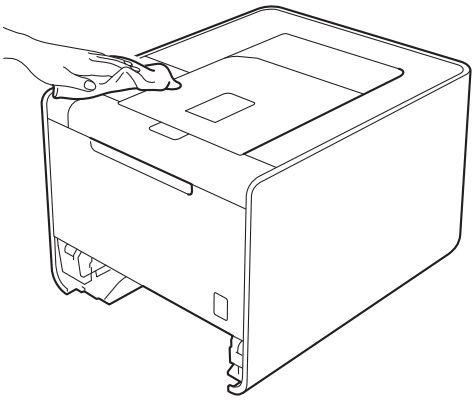

4 Remove anything that is stuck inside the paper tray.

5 Wipe the inside of the paper tray with a dry, lint-free cloth to remove dust.

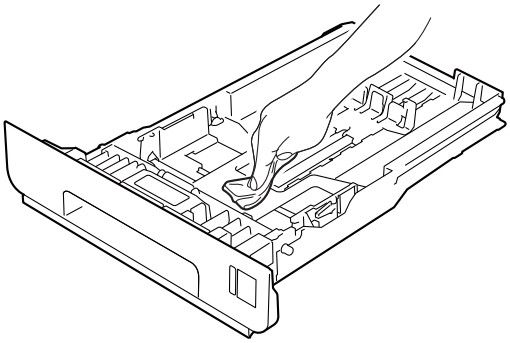

6 Put the paper tray back in the machine.

7 Connect interface cables and then plug the machine back in. Turn on the power switch.

Cleaning the inside of the machine

1. Turn off the machine's power switch. Disconnect all interface cables, and then unplug the AC power cord.
2. Press the front cover release button and then open the front cover.

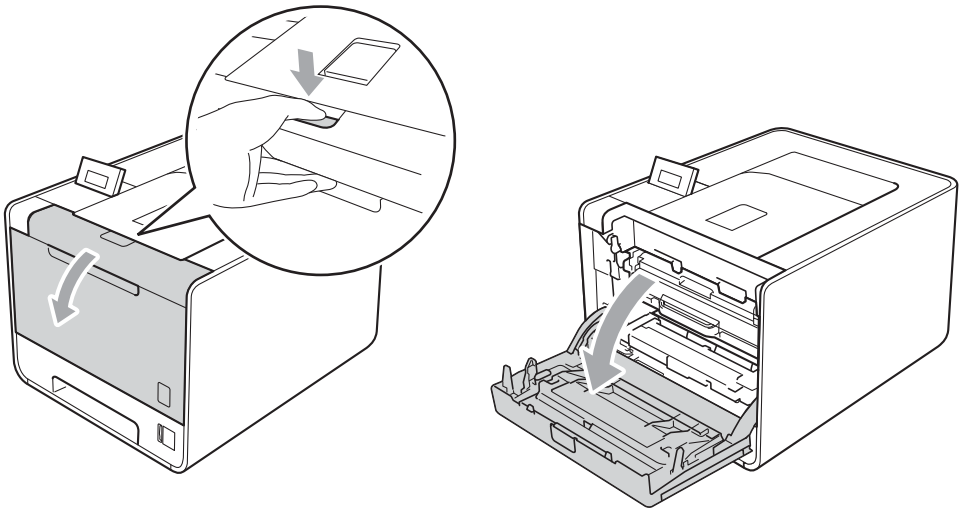

3. Hold the green handle of the drum unit. Pull the drum unit out until it stops.

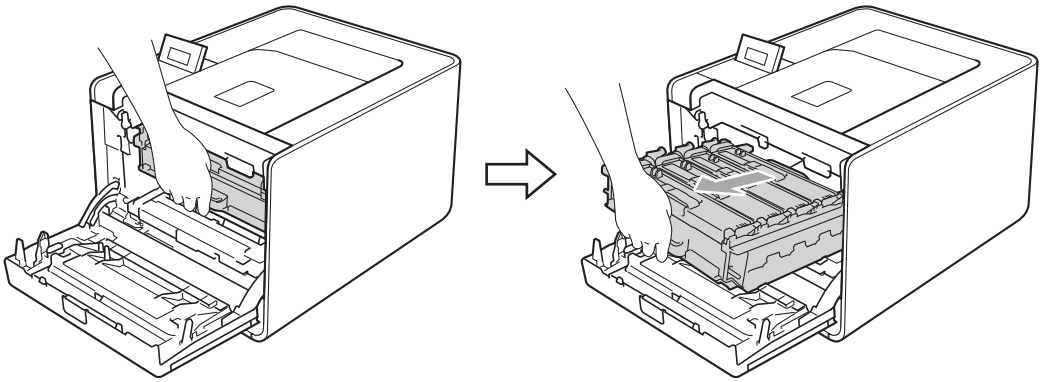

4. Turn the green lock lever (1) at the left of the machine counterclockwise to the release position. Holding the green handles of the drum unit, lift the front of the drum unit and remove it from the machine.

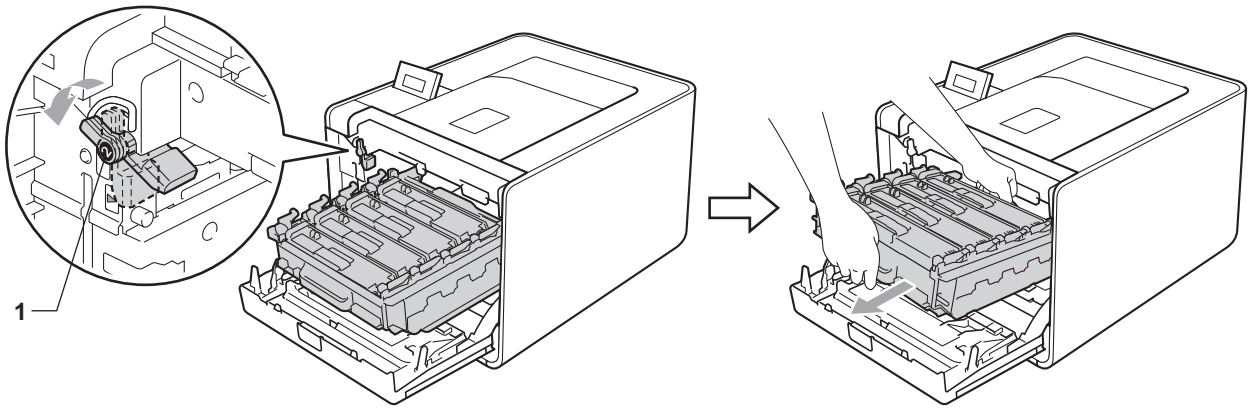

IMPORTANT

- Hold the green handles of the drum unit when you carry it. DO NOT hold the sides of the drum unit.

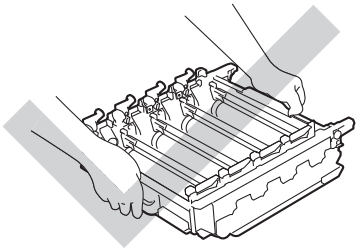

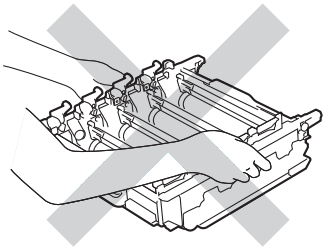

- We recommend that you place the drum unit on a clean, flat surface with a piece of disposable paper underneath it in case you accidentally spill or scatter toner.
- To prevent damage to the machine from static electricity, DO NOT touch the electrodes shown in the illustration.

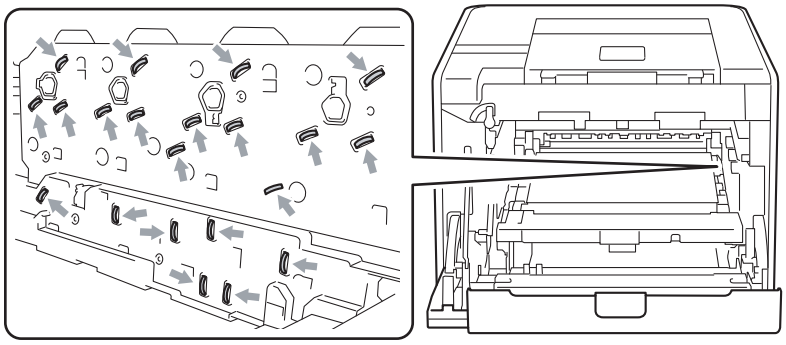

5 Wipe the four scanner windows (1) with a dry, lint-free cloth.

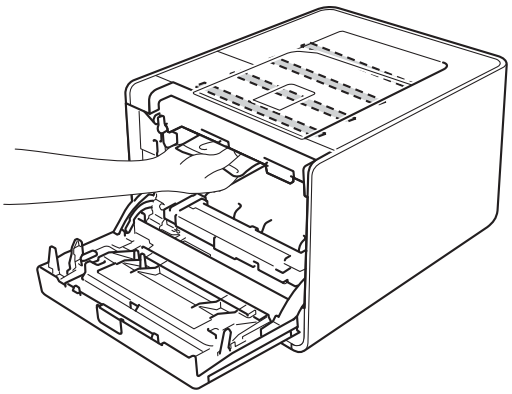

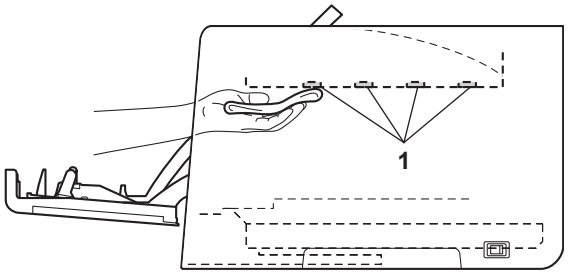

6 Make sure the green lock lever (1) is in the release position as shown in the illustration.

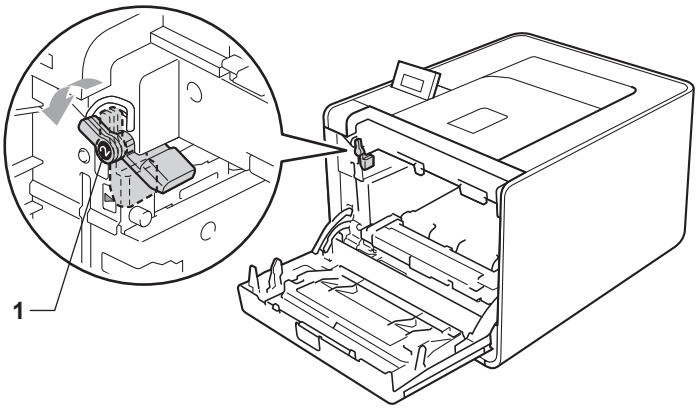

7 Match the guide ends (2) of the drum unit to the ▶ marks (1) on both sides of the machine, then gently slide the drum unit into the machine until it stops at the green lock lever.

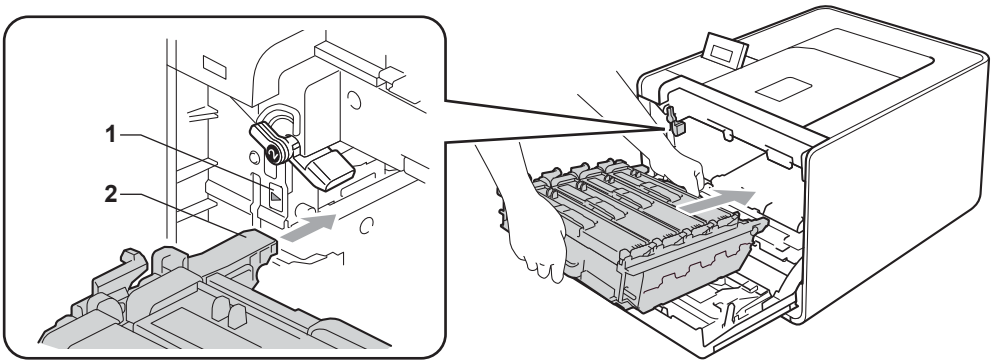

8 Turn the green lock lever (1) clockwise to the lock position.

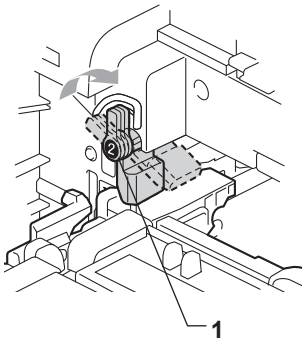

9 Push the drum unit in until it stops.

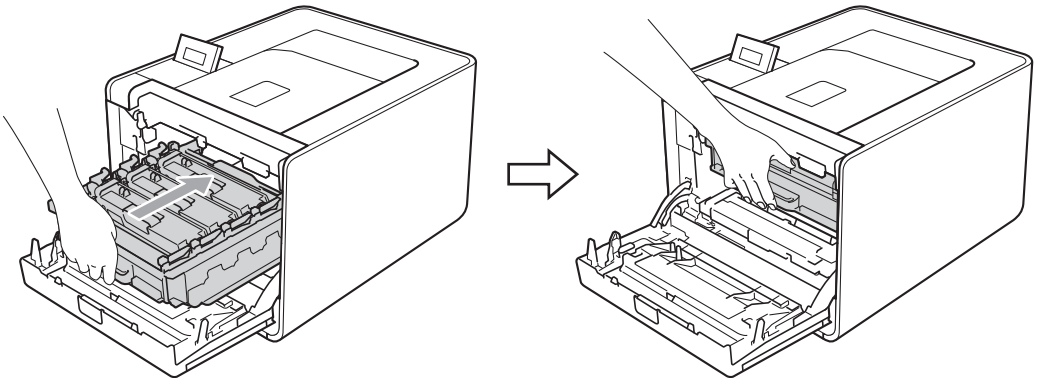

10 Close the front cover of the machine.

11 Connect interface cables and then plug the machine back in. Turn on the power switch.

Cleaning the corona wires

If you have print quality problems, clean the corona wires as follows:

1. Press the front cover release button and then open the front cover.

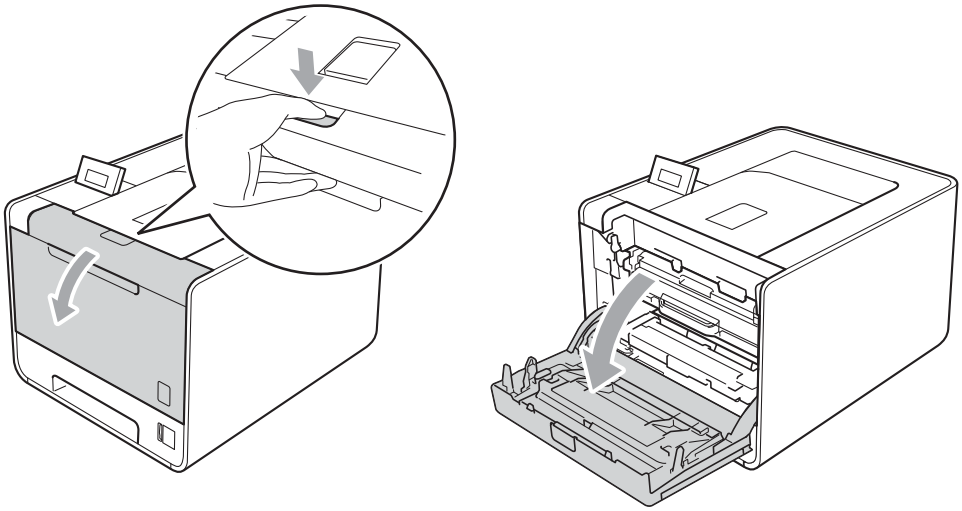

2. Hold the green handle of the drum unit. Pull the drum unit out until it stops.

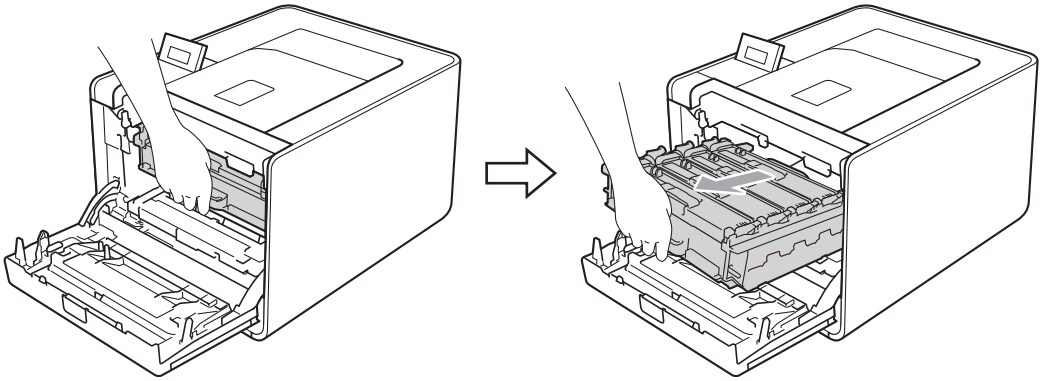

3. Hold the handle of the toner cartridge and slightly push it toward the machine to unlock it. Then pull it out of the drum unit. Repeat this for all the toner cartridges.

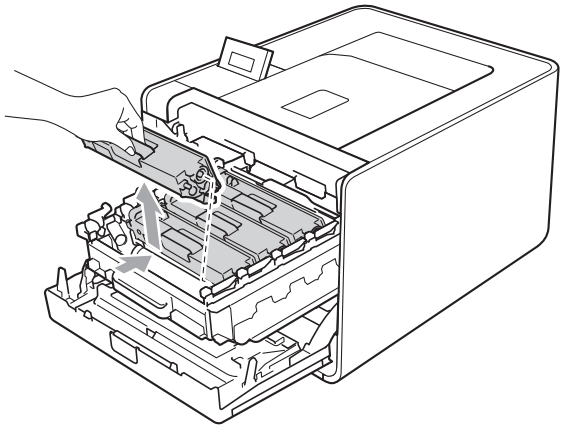

4 Push to release the latches of the corona wire cover (1), and then open the cover.

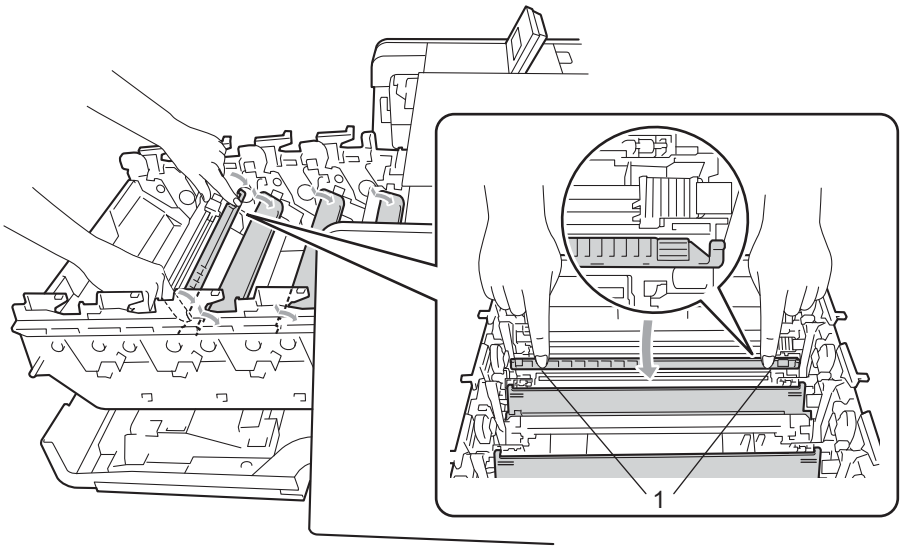

5 Clean the corona wire inside the drum unit by gently sliding the green tab from left to right and right to left several times.

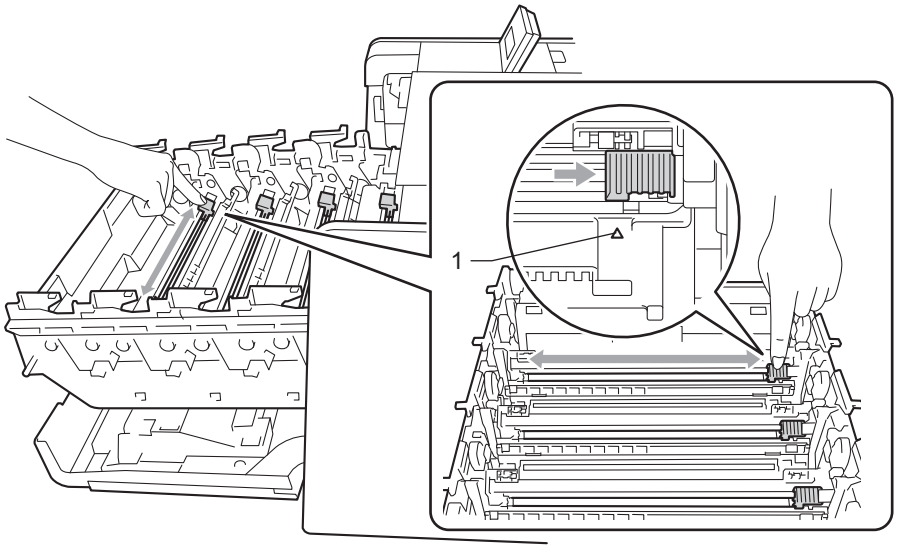

Note

Be sure to return the tab to the home position (▲) (1). If you do not, printed pages may have a vertical stripe.

6 Close the corona wire cover.

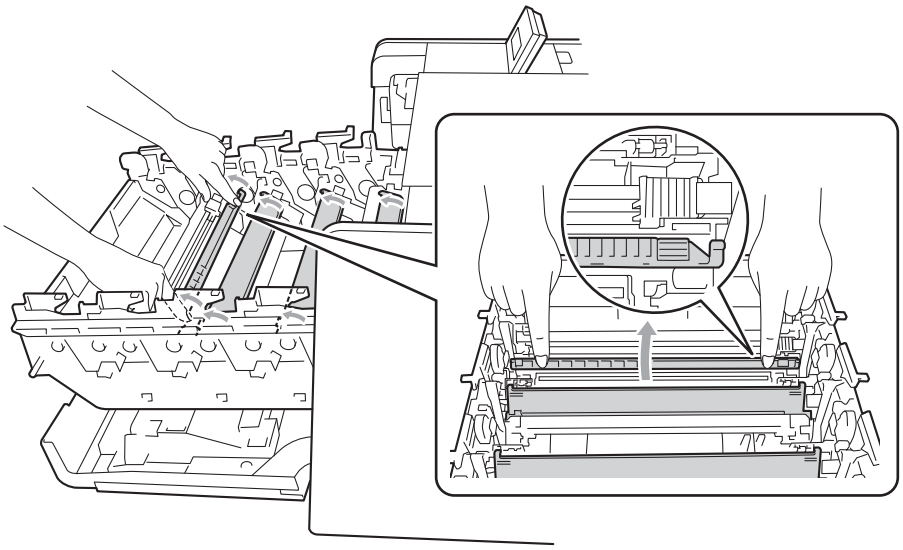

7 Repeat steps ❹ to ❻ to clean each of three remaining corona wires.

8 Hold the handle of the toner cartridge and slide the toner cartridge into the drum unit then slightly pull it toward you until you hear it click into place. Make sure that you match the toner cartridge colour to the same colour label on the drum unit. Repeat this for all the toner cartridges.

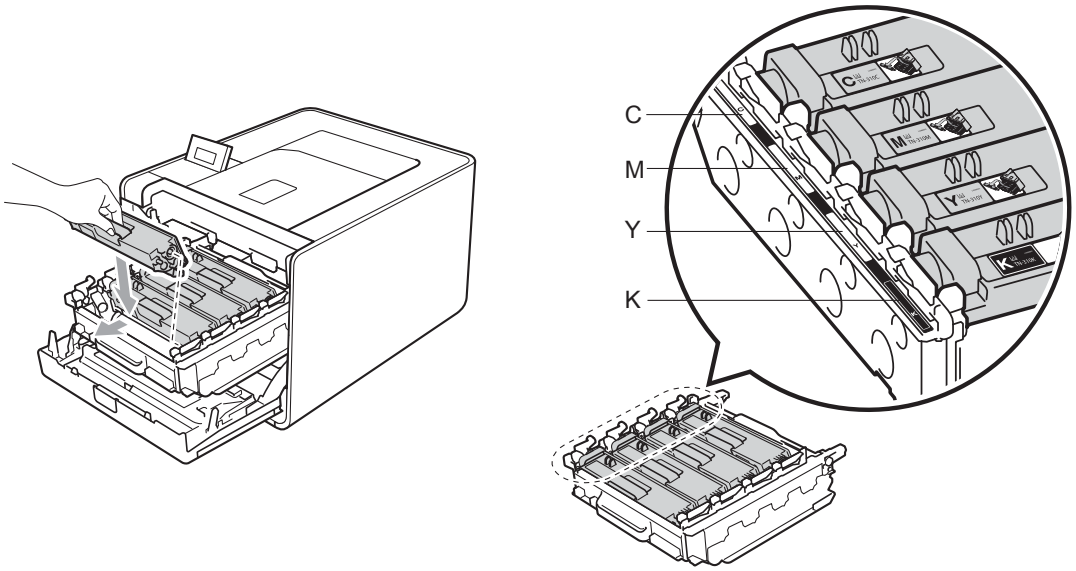

C - Cyan

M - Magenta

Y - Yellow

K - Black

9 Push the drum unit in until it stops.

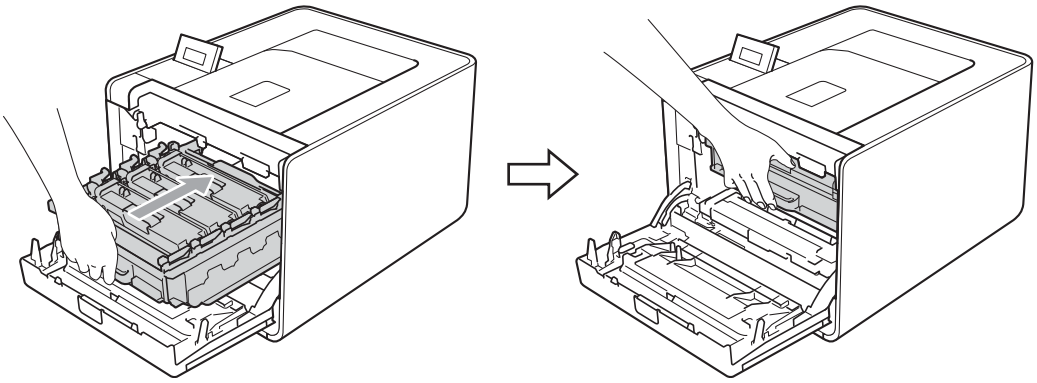

10 Close the front cover of the machine.

Cleaning the drum unit

If your printout has coloured spots at 94 mm (3.7 in.) intervals, the drum may have foreign material, such as glue from a label stuck on the drum surface. Follow the steps below to solve the problem.

1. Make sure the machine is in the ready state.
2. Press **+** or **-** to choose `Machine Info.`. Press **OK**.
3. Press **+** or **-** to choose `Drum Dot Print`. Press **OK** to print out the drum dot check sheet.
4. Turn off the machine's power switch. Disconnect all interface cables, and then unplug the AC power cord.
5. Press the front cover release button and then open the front cover.

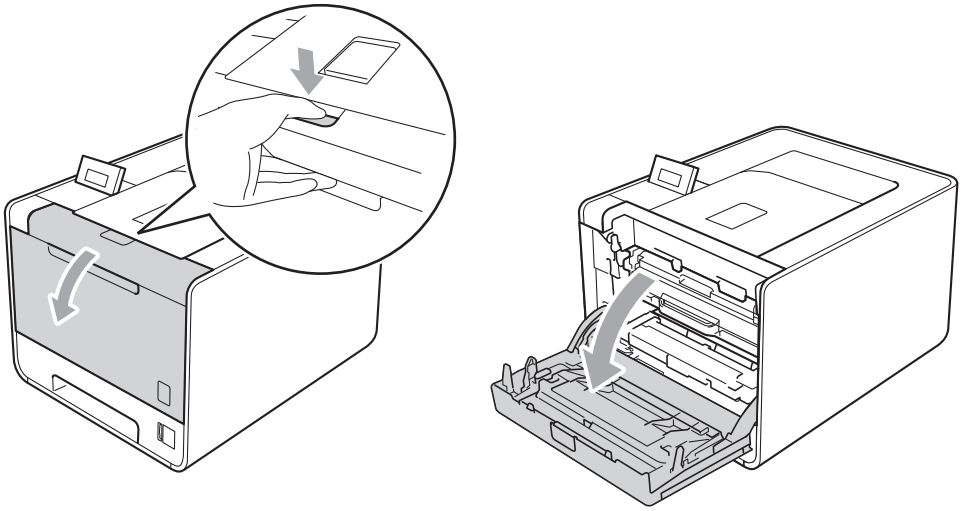

6. Hold the green handle of the drum unit. Pull the drum unit out until it stops.

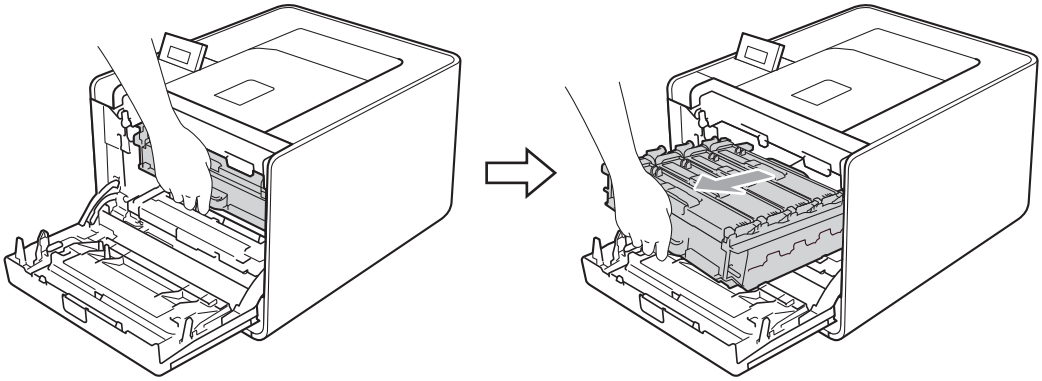

7 Turn the green lock lever (1) at the left of the machine counterclockwise to the release position. Holding the green handles of the drum unit, lift the front of the drum unit and remove it from the machine.

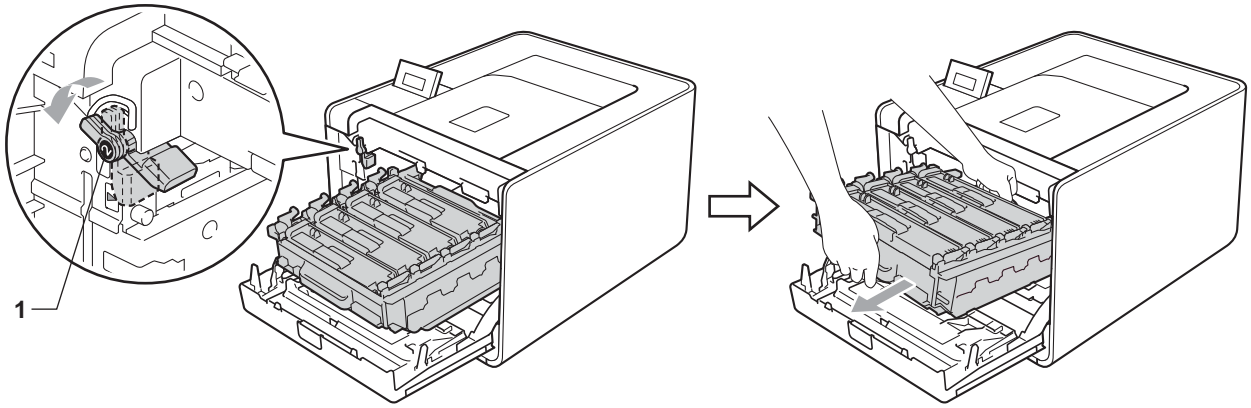

IMPORTANT

- Hold the green handles of the drum unit when you carry it. DO NOT hold the sides of the drum unit.

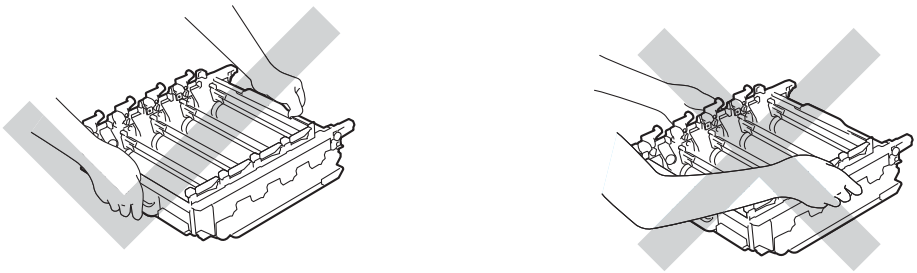

- We recommend that you place the drum unit and/or toner cartridge on a clean, flat surface with a piece of disposable paper underneath it in case you accidentally spill or scatter toner.
- Handle the toner cartridge and the waste toner box carefully. If toner scatters on your hands or clothes, wipe or wash it off with cold water at once.
- To prevent damage to the machine from static electricity, DO NOT touch the electrodes shown in the illustration.

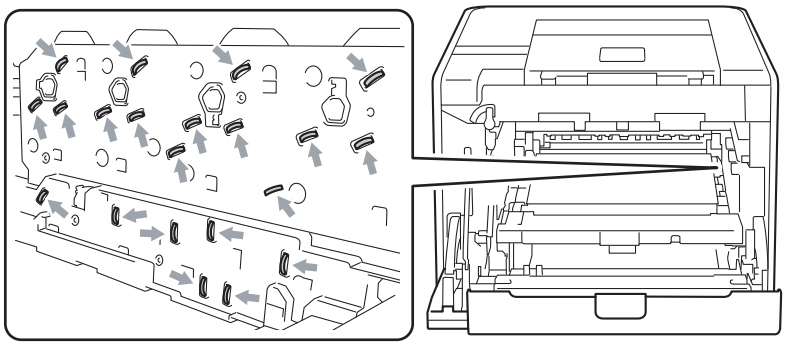

8 Hold the handle of the toner cartridge and slightly push it to unlock. Then pull it out of the drum unit. Repeat this for all the toner cartridges.

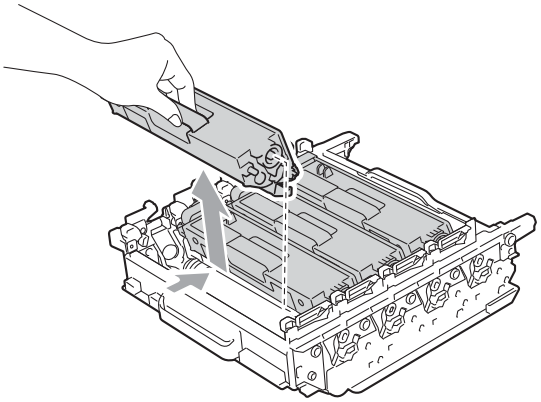

9 Turn the drum unit over by holding the green handles. Make sure that the drum unit gears (1) are on the left hand side.

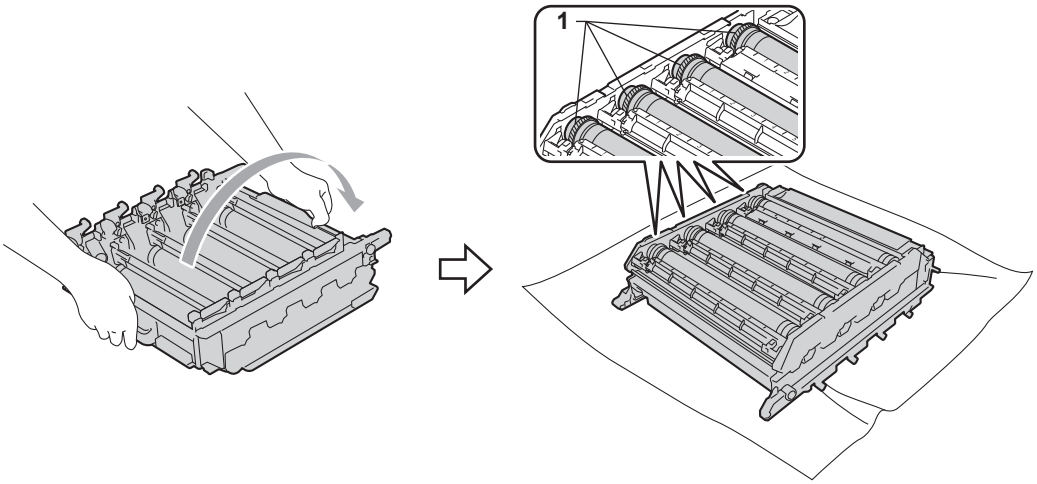

10 Read following information from the drum dot check sheet.

- Dot Colour problem: The colour of printed dots is the colour of the drum you should clean.
- Dot location: The sheet has eight numbered columns. The number of the column with the printed dot in it is used to find the dot position on the drum.

11 Confirm suspected area of the appropriate colour drum by using the numbers beside the drum which relate to the numbers of column.

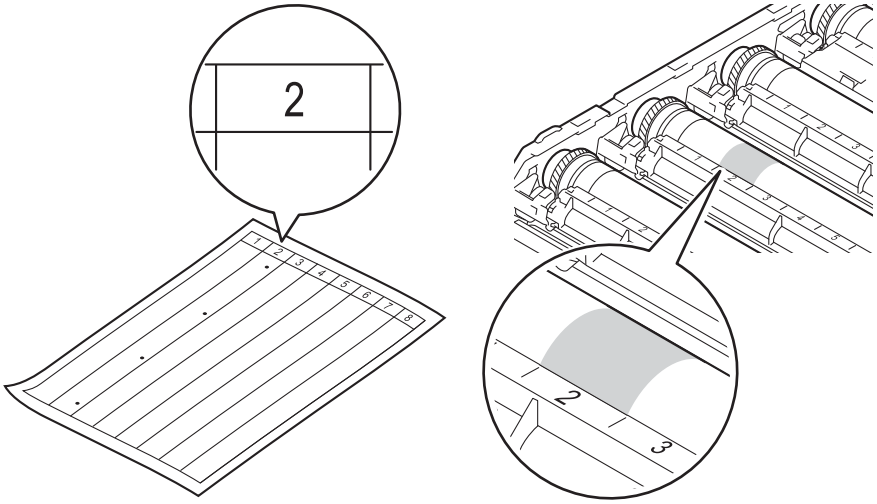

12 Turn the drum unit gear toward you by hand while looking at surface of the suspected area.

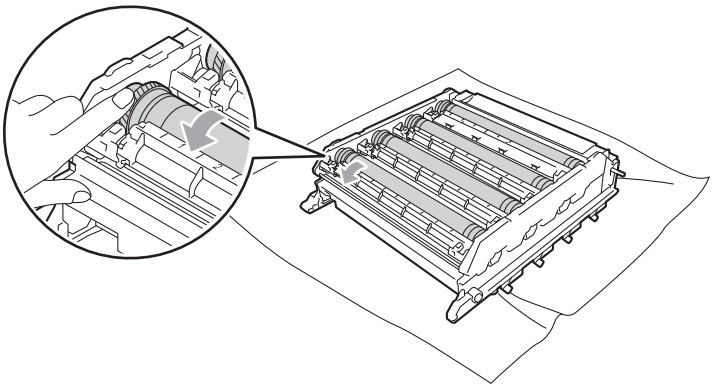

13 When you have found the mark on the drum that matches the drum dot check sheet, wipe the surface of the drum gently with a cotton swab until the mark on the surface comes off.

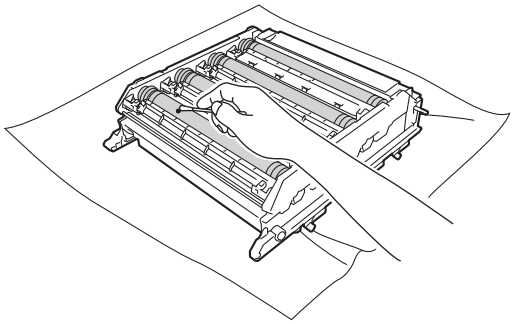

IMPORTANT

DO NOT clean the surface of the photosensitive drum with a sharp object.

14 Hold the handle of the toner cartridge and slide it into the appropriate coloured section of the drum unit until it clicks into place.

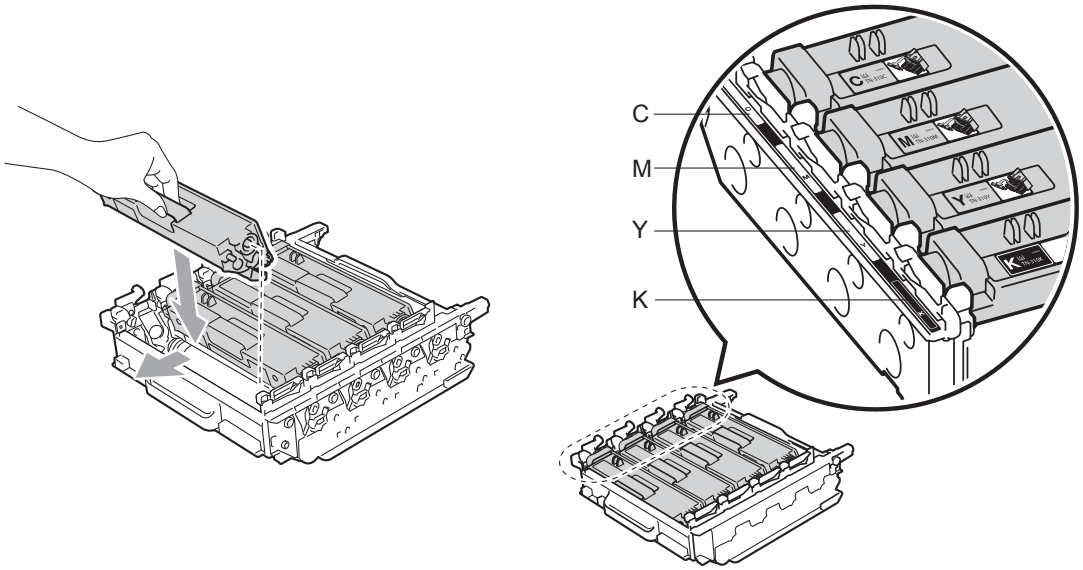

C - Cyan
M - Magenta
Y - Yellow
K - Black

15 Make sure the green lock lever (1) is in the release position as shown in the illustration.

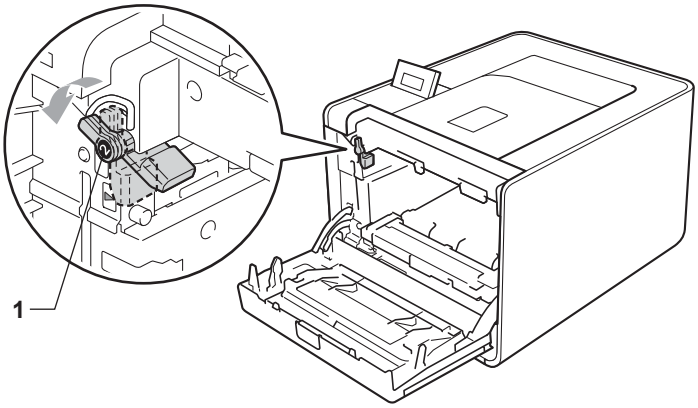

16 Match the guide ends (2) of the drum unit to the ▶ marks (1) on both sides of the machine, then gently slide the drum unit into the machine until it stops at the green lock lever.

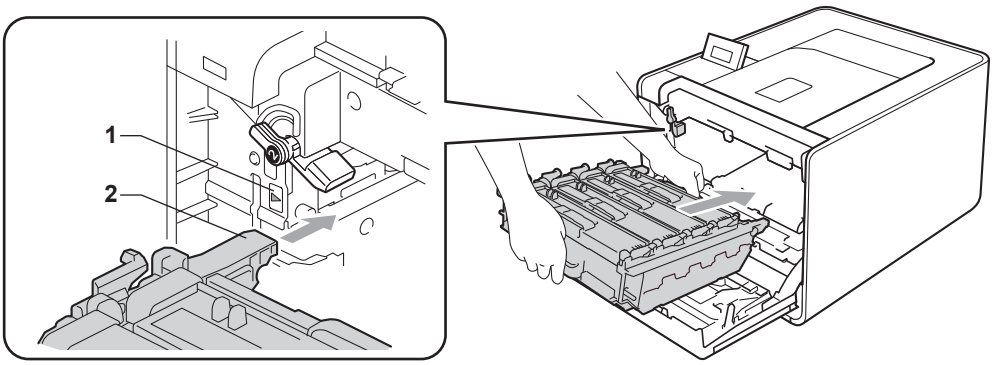

17 Turn the green lock lever (1) clockwise to the lock position.

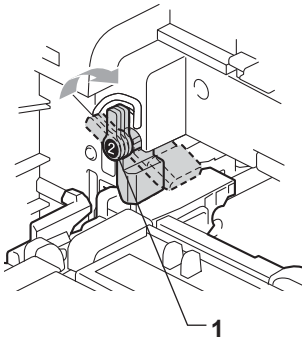

18 Push the drum unit in until it stops.

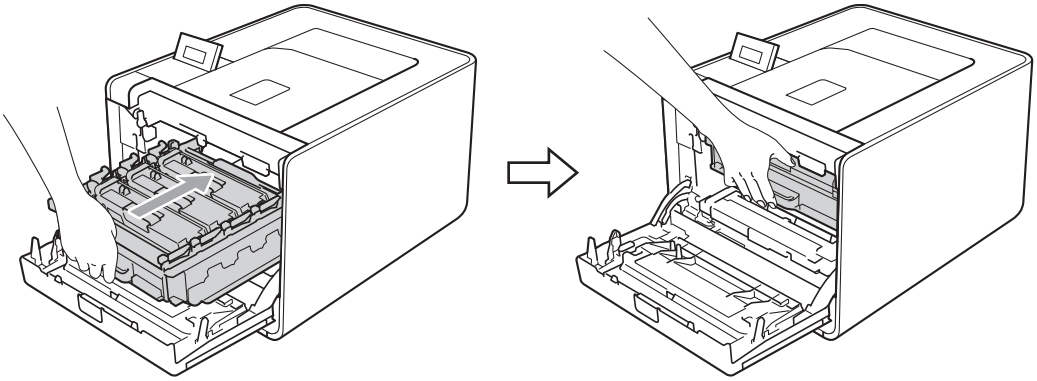

19 Close the front cover of the machine.

20 Connect interface cables and then plug the machine back in. Turn on the power switch.

Cleaning the paper pick-up roller

1. Turn off the machine's power switch. Disconnect all interface cables, and then unplug the AC power cord.
2. Pull the paper tray completely out of the machine.
3. Tightly wring out a lint-free cloth soaked in lukewarm water, and then wipe the separator pad (1) of the paper tray with it to remove dust.

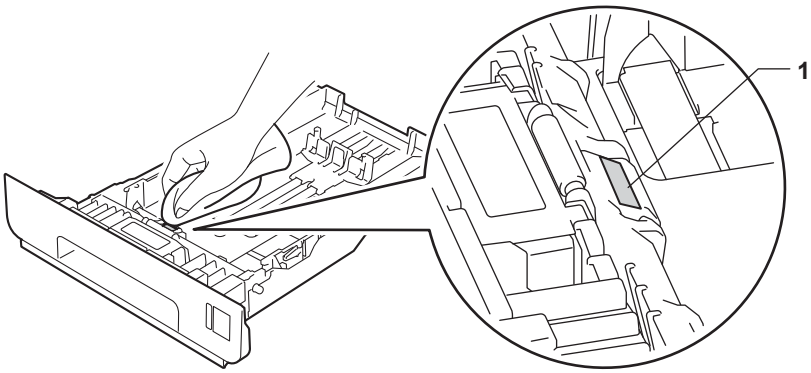

4. Wipe the two pick-up rollers (1) inside of the machine to remove dust.

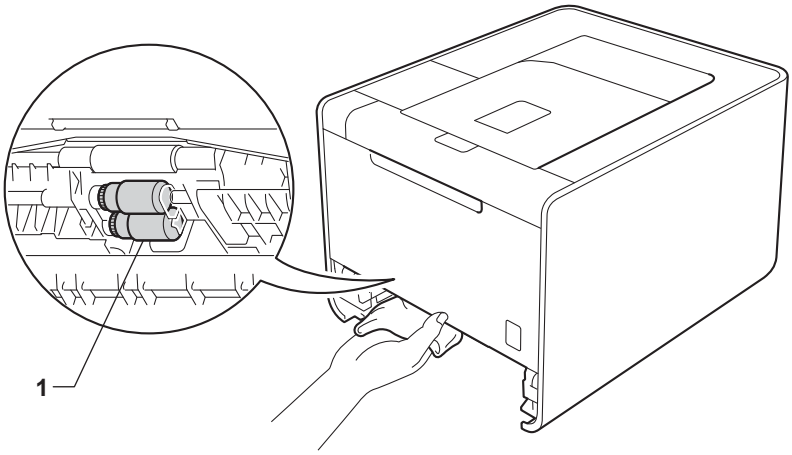

5. Put the paper tray back in the machine.
6. Connect interface cables and then plug the machine back in. Turn on the power switch.

Shipment of the machine

WARNING

This machine is heavy and weighs approximately 21.0 kg (46.3 lb). To prevent possible injuries at least two people should lift the machine. Be careful not to pinch your fingers when you put the machine down.

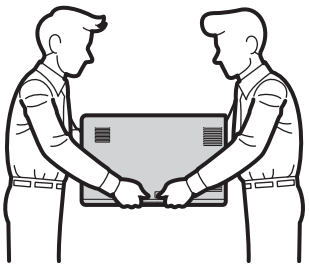

If you use a Lower Tray, carry it separately from your machine.

IMPORTANT

When shipping the machine, the waste toner box must be removed from the machine and put in a plastic bag, and then sealed. Failure to remove it and put it in a plastic bag before shipping may cause severe damage to the machine and may void the warranty.

Note

If for any reason you must ship your machine, carefully repack the machine in the original packaging to avoid any damage during transit. The machine should be adequately insured with the carrier.

Make sure that you have the following parts for repacking:

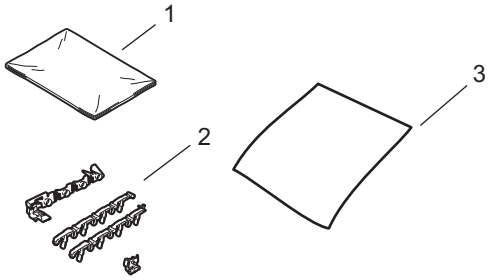

1 **Plastic bag for the waste toner box**

2 **Orange packing materials for locking the internal parts (4 pieces)**

3 **A piece of paper (A4 or Letter) to protect the belt unit (Please prepare by yourself)**

1. Turn off the machine's power switch. Disconnect all interface cables, and then unplug the AC power cord.
2. Press the front cover release button and then open the front cover.

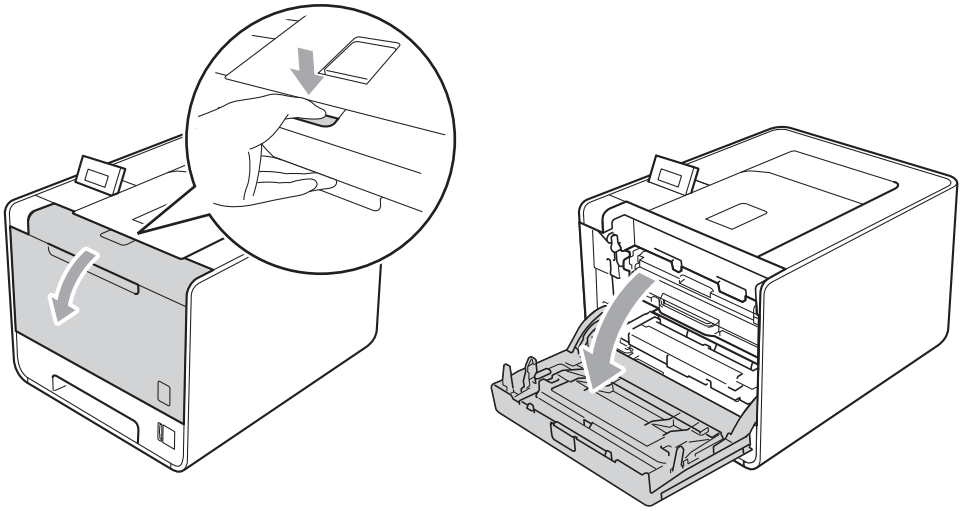

3. Hold the green handle of the drum unit. Pull the drum unit out until it stops.

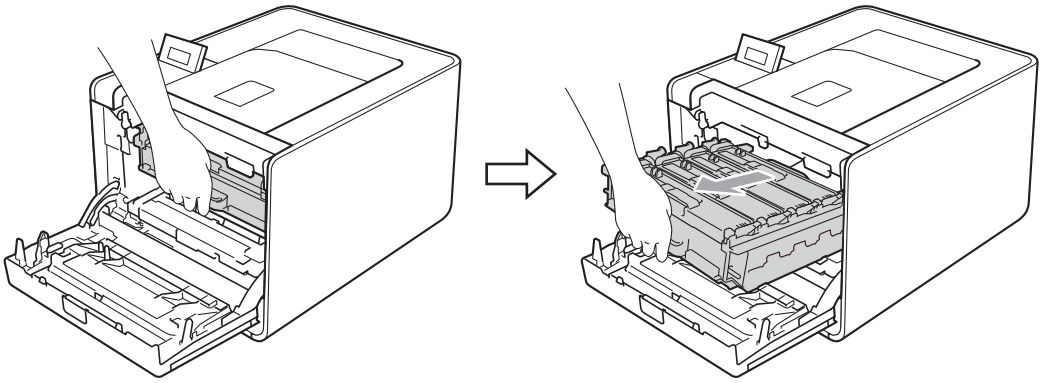

4. Turn the green lock lever (1) at the left of the machine counterclockwise to the release position. Holding the green handles of the drum unit, lift the front of the drum unit and remove it from the machine.

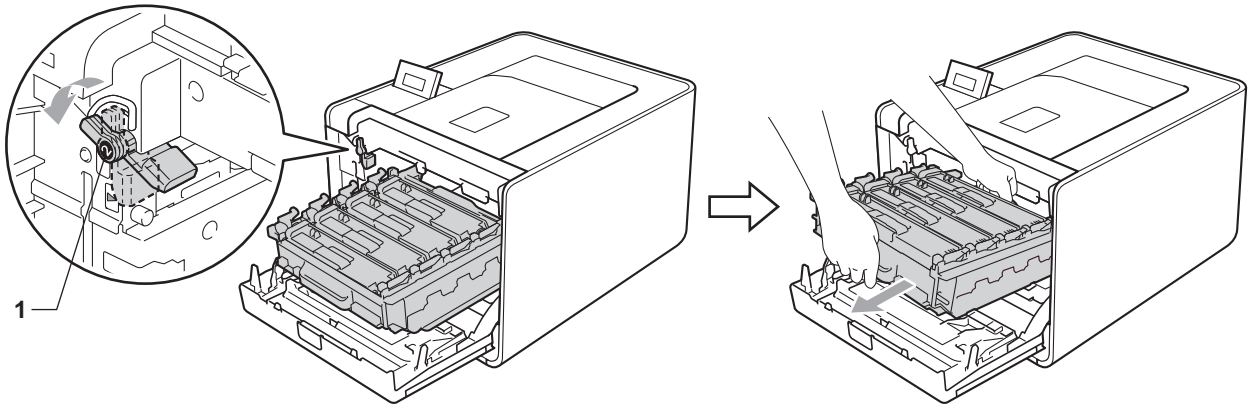

IMPORTANT

- Hold the green handles of the drum unit when you carry it. DO NOT hold the sides of the drum unit.

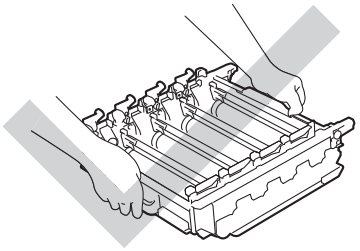

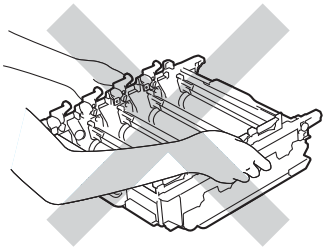

- We recommend that you place the drum unit on a clean, flat surface with a piece of disposable paper underneath it in case you accidentally spill or scatter toner.
- Handle the toner cartridge and the waste toner box carefully. If toner scatters on your hands or clothes, wipe or wash it off with cold water at once.
- To prevent damage to the machine from static electricity, DO NOT touch the electrodes shown in the illustration.

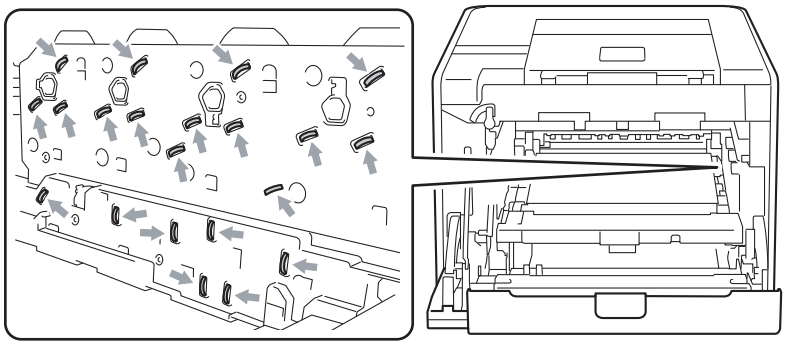

5 Hold the green handle of the belt unit with both hands and lift the belt unit up, then pull it out.

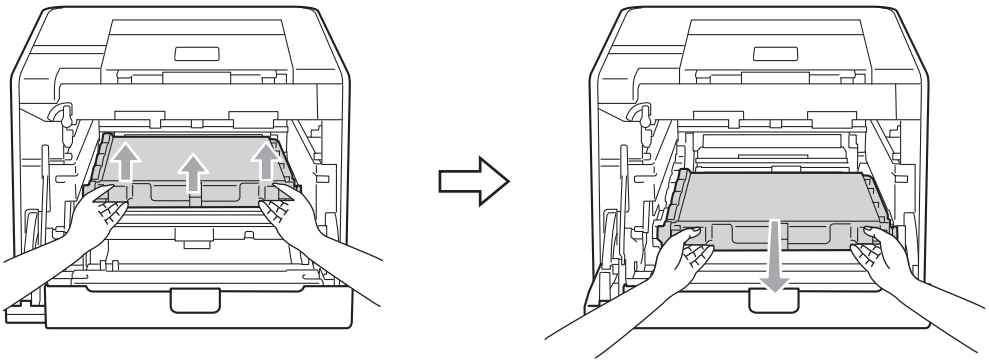

6 Remove two pieces of orange packing material and discard them.

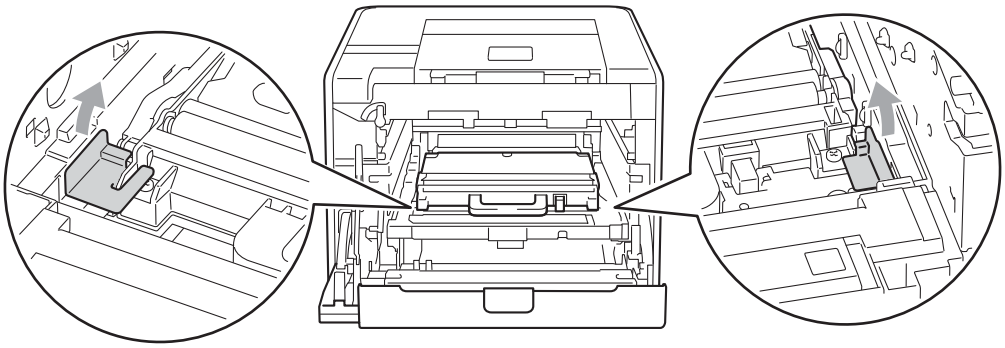

Note

This step is only necessary when you are replacing the waste toner box for the first time, and is not required for the replacement waste toner box. The orange packing pieces are installed at the factory to protect your machine during shipment.

7 Remove the waste toner box from the machine using the green handle, and then put it in a plastic bag and seal the bag completely.

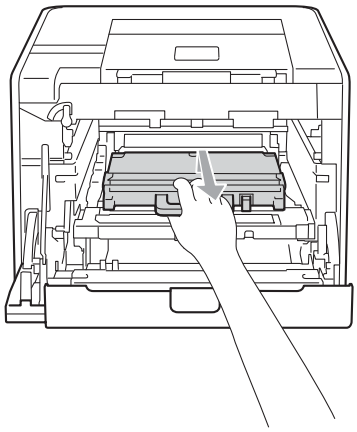

IMPORTANT

Handle the waste toner box carefully. If toner scatters on your hands or clothes, wipe or wash it off with cold water at once.

8 Slide the belt unit back into the machine. Make sure the belt unit is level and fits firmly into place.

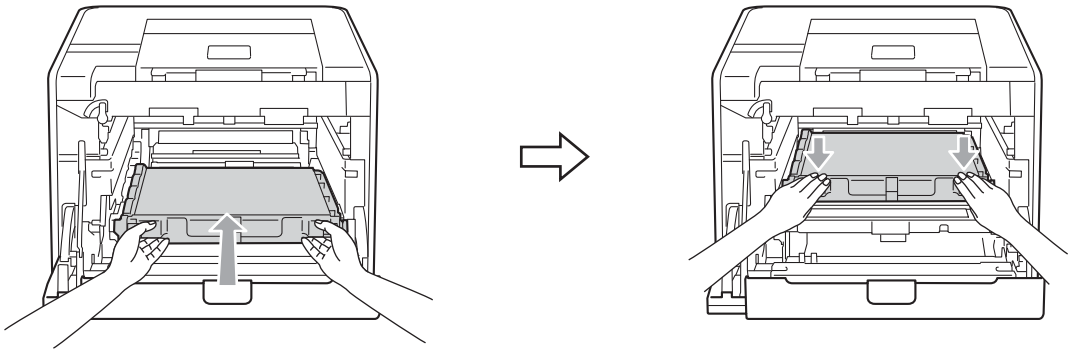

9 Install orange packing materials to the drum unit as follows:

- Install one orange packing material (1) to secure the toner cartridges to the drum unit on the left and right sides respectively.
- Install one orange packing material (2) to the drum's side surface on the left side only, as viewed from the front.
- Install one orange packing material (3) to the drum's side protruding section on the right side.

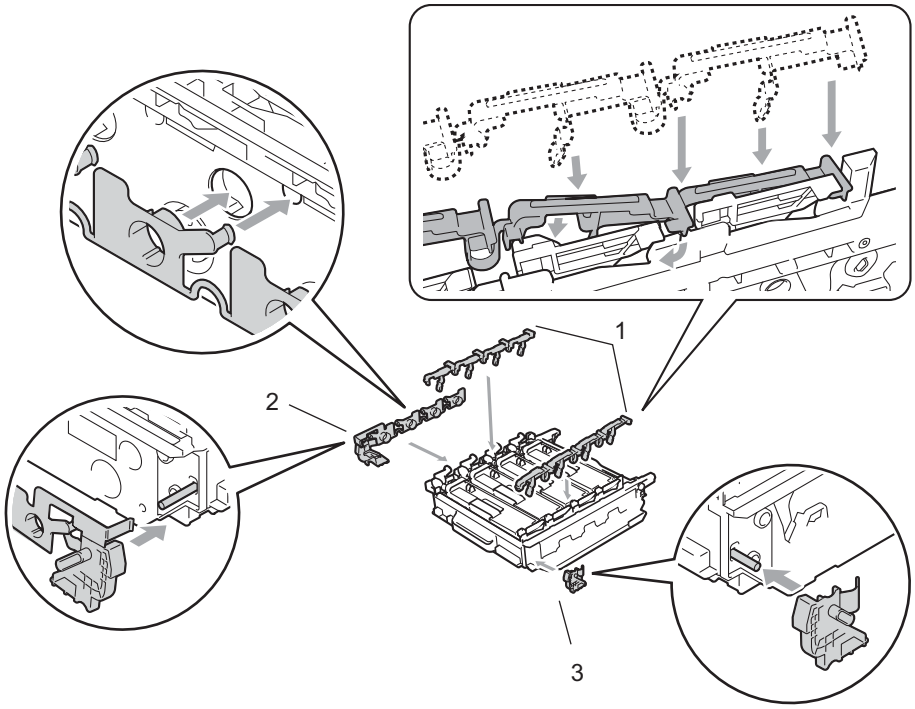

10 Put a piece of paper (A4 or letter) on the belt unit to prevent damage to the belt unit.

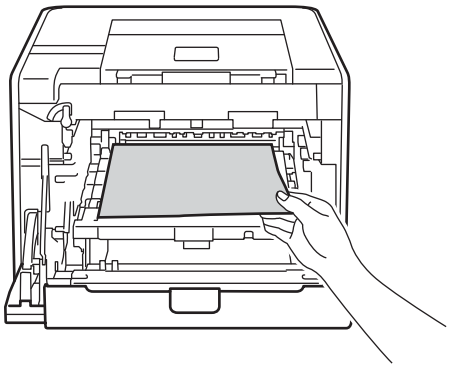

11 Make sure the green lock lever (1) is in the release position as shown in the illustration.

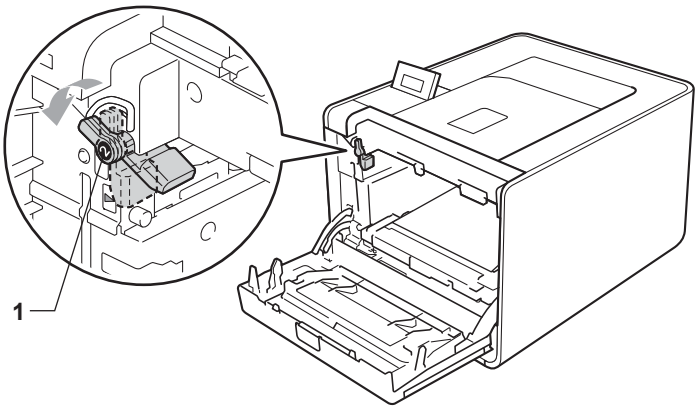

12 Match the guide ends (2) of the drum unit to the ▶ marks (1) on both sides of the machine, then gently slide the drum unit into the machine until it stops at the green lock lever.

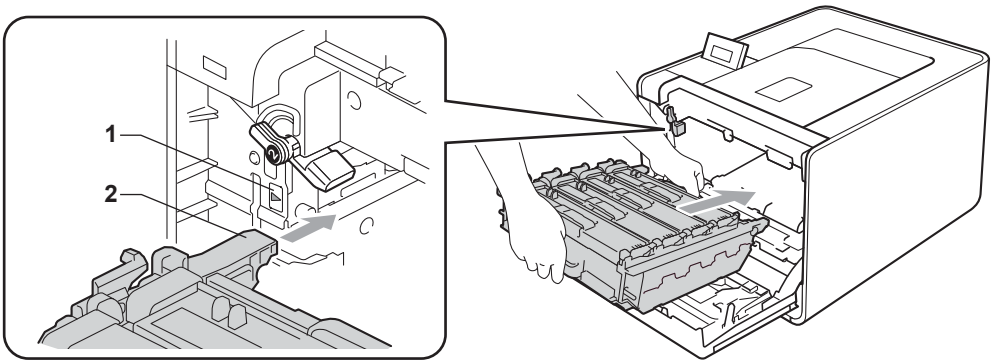

13 Turn the green lock lever (1) clockwise to the lock position.

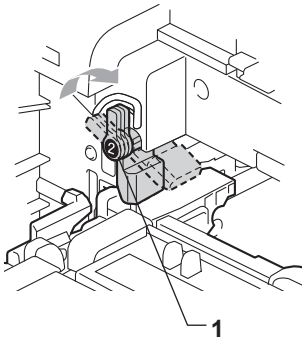

14 Push the drum unit in until it stops.

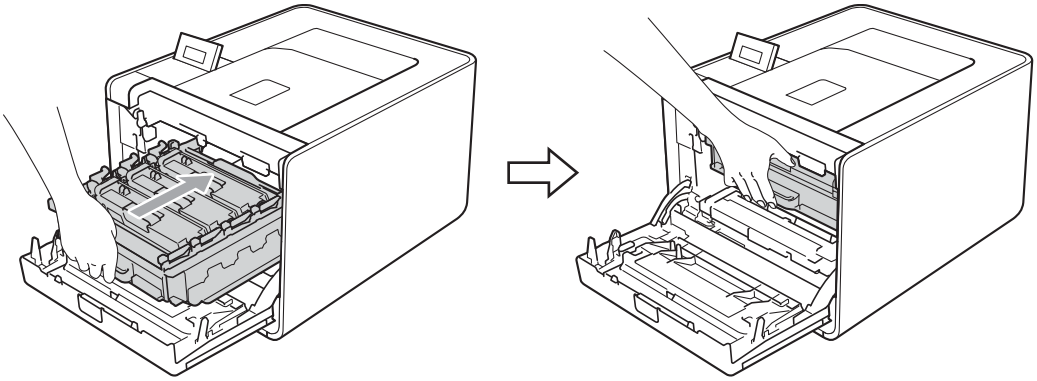

15 Close the front cover of the machine.

16 Put the Styrofoam piece (1) into the carton. Then put the waste toner box in the Styrofoam piece.

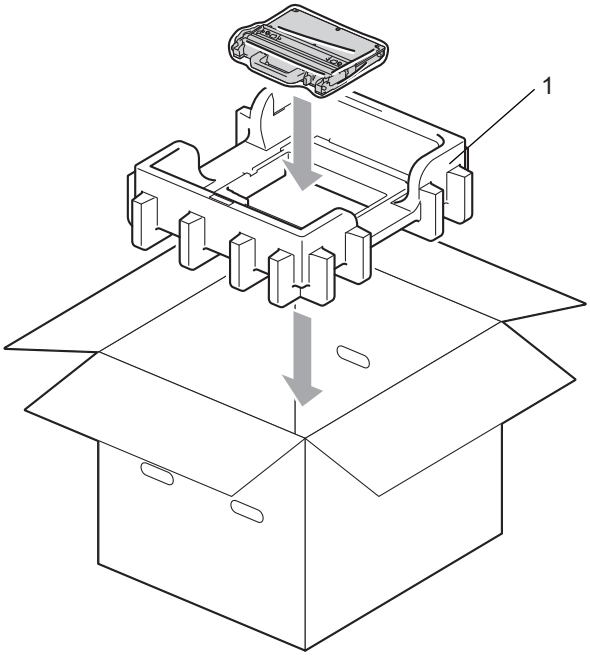

17 Wrap the machine with a plastic bag. Put the machine on the Styrofoam piece (1) and the Styrofoam piece (2) on the top of the machine. Match the front side of the machine to the “FRONT” mark on each Styrofoam piece.

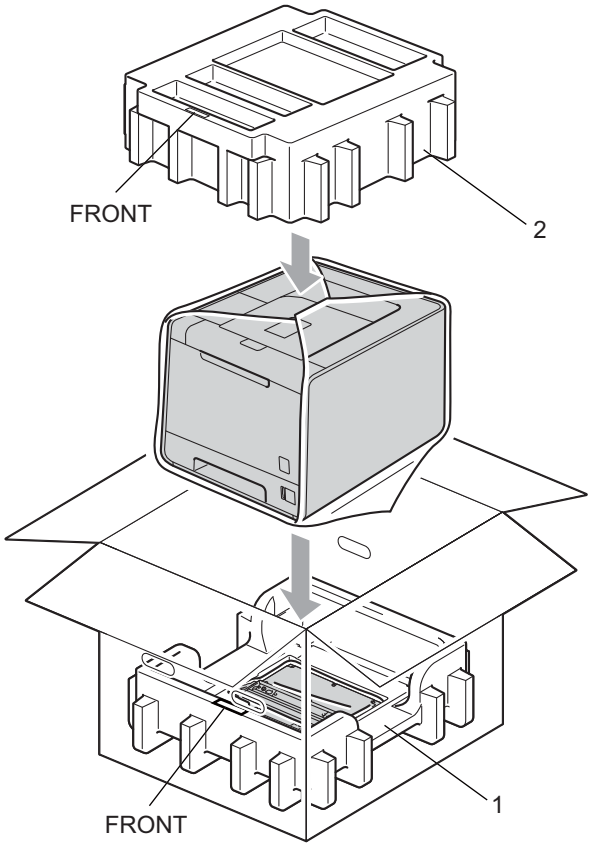

18 Put the power cord into the Styrofoam piece (2).

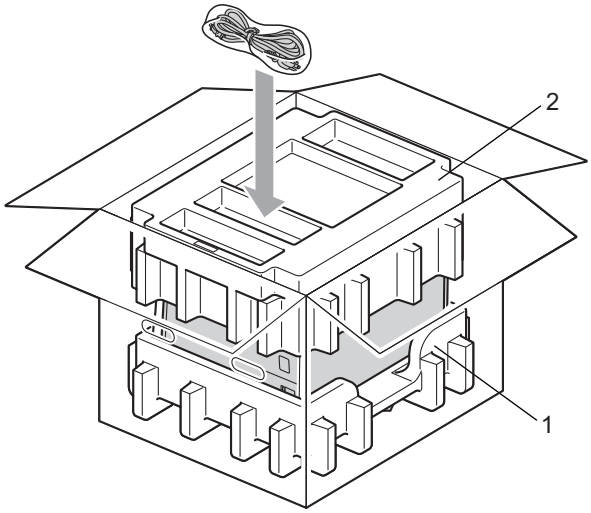

19 Close the carton and tape it shut.

6 Troubleshooting

You can correct most problems by yourself. If you need additional help, the Brother Solutions Center offers the latest FAQs and troubleshooting tips. Visit us at http://solutions.brother.com/.

Identifying your problem

First, check the following:

- The AC power cord is connected properly and the machine is turned on.
- All of the protective parts have been removed.
- The toner cartridges and drum unit are installed properly.
- The front and back covers are fully closed.
- Paper is inserted properly in the paper tray.
- The interface cable is securely connected to the machine and the computer.
- The correct driver for the machine has been chosen and is installed.
- The computer is set up to connect to the correct machine port.

Machine does not print:

If you did not solve your problem with the above checks, identify your problem and then go to the page suggested below.

- **LCD Messages**

  (See *LCD messages* on page 141.)
- **Paper handling**

  (See *Paper handling* on page 145 and *Paper jams and how to clear them* on page 146.)
- **Other problems**

  (See *Other problems* on page 167.)

Pages are printed, but there are problems with:

- **Print quality**

  (See *Improving the print quality* on page 160.)
- **Printout is incorrect**

  (See *Solving print problems* on page 166.)

LCD messages

If any problems occur, the machine automatically stops printing, diagnoses the problem, and displays the resulting message on the LCD to alert you. Take the appropriate action, referring to the following tables. If you cannot clear the problem, call the dealer you bought the machine from or Brother Customer Service.

Note

The LCD names for the paper trays are as follows.

- Standard paper tray: `Tray 1`
- Multi-purpose tray: `MP`
- Optional lower tray unit: `Tray 2`

Error messages

Error message	Cause	Action
`Access Error`	The device is removed from the USB direct interface while the data is processing.	The USB device was removed while data was processing. Press **Cancel**. Reinsert the USB device and try to print with Direct Print.

`Calibrate`
<The second line of the LCD>
`Calibration failed. See Troubleshooting chapter in User's Guide.`
	Calibration failed.	■ Turn off the machine. Wait a few seconds, then turn it on again.
		■ Put in a new drum unit. (See *Replacing the drum unit* on page 102.)
		■ Put in a new belt unit. (See *Replacing the belt unit* on page 106.)
		■ Put in a waste toner box. (See *Replacing the waste toner box* on page 110.)
		■ If the problem continues, call your dealer or Brother Customer Service.

`Cartridge Error`	The toner cartridge is not installed correctly.	Pull out the drum unit. Take out the toner cartridge indicated on the LCD and then correctly re-install it in the drum unit. Put the drum unit back in the machine. If the problem continues, call your dealer or Brother customer Service.
`Condensation`	One of the issues that can cause this error is that condensation may form inside the machine after a room temperature change.	Leave the machine turned on. Wait for 30 minutes with the front cover fully opened. Then turn off the machine and close the cover. Turn it on again.
`Cover is Open`	The cover indicated on the LCD is not completely closed.	Close the cover that is indicated on the second line of the LCD.

Error messages (continued)

Error message	Cause	Action
DIMM Error	■ The DIMM is not installed correctly. ■ The DIMM is broken. ■ The DIMM does not meet the required specifications.	■ Turn off the machine and remove the DIMM. ■ Confirm the DIMM meets the required specifications. (For details, see *SO-DIMM types* on page 86.) ■ Re-install the DIMM correctly. Wait a few seconds, and then turn it on again. ■ If this error message appears again, replace the DIMM with a new one. (See *Installing extra memory* on page 87.)
Drum Error	The corona wire on the drum unit needs to be cleaned.	Clean the corona wires. (See *Cleaning the corona wires* on page 121.)
Duplex Disabled <The second line of the LCD> Close the Back Cover of the machine.	The back cover of the machine is not closed completely.	Close the back cover of the machine.
Duplex Disabled <The second line of the LCD> Load XX paper and press Go.	Although the size of paper in the paper tray matches the paper size that was selected from the control panel or printer driver, the machine has stopped printing when it encountered an additional, different size of paper in the tray. The LCD is telling you to load only the selected paper size.	Make sure the paper tray contains only the size of paper you select in either the control panel or printer driver, then press **Go**.
	The paper tray was pulled out before the machine completed printing on both sides of the paper.	Re-install the paper tray and press **Go**.
Fuser Error	The temperature of the fuser unit does not rise to a specified temperature within the specified time.	Turn the power switch off, wait a few seconds and then turn it on again. Leave the machine for 15 minutes with the power on.
	The fuser unit is too hot.	
Jam XXX	The paper is jammed in the area shown on the LCD.	Carefully pull out the jammed paper from the area shown in *Paper jams and how to clear them* on page 146.
Low Temperature	The room temperature is too low for the machine to operate.	Increase the room temperature to allow the machine to operate.
No Belt Unit	The belt unit is not installed correctly.	Re-install the belt unit. (See *Belt unit* on page 106.)
No Drum Unit	The drum unit is not installed correctly.	Re-install the drum unit. (See *Drum unit* on page 101.)

Error messages (continued)

Error message	Cause	Action
No Paper	The machine is out of paper or paper is not correctly loaded in the paper tray.	Put the paper in the indicated paper tray. If the problem is not resolved, the paper pick-up roller may need to be cleaned. Clean the paper pick-up roller. (See *Cleaning the paper pick-up roller* on page 131.)
No Toner	The toner cartridge for the colour indicated on the second line of LCD is not installed correctly.	Pull out the drum unit. Take out the toner cartridge for the colour indicated on the second line of LCD, and then put it back into the drum unit. (See *Toner cartridges* on page 96)
No Tray	The paper tray that is indicated on the second line of the LCD is not installed or not installed correctly.	Re-install the paper tray that is indicated on the second line of the LCD.
No Waste Toner	The waste toner box is not installed correctly.	Re-install the Waste Toner Box. (See *Waste toner box* on page 110.)
Out of Memory	The machine's memory is full.	If the LCD shows this error message when you print the secure data, press **Cancel** and delete the previously stored data. Except in the case of printing secure data, add more memory. (See *Installing extra memory* on page 87.)
Registration <The second line of the LCD> Registration failed. See Troubleshooting chapter in User's Guide.	Registration failed.	■ Turn off the machine. Wait a few seconds, then turn it on again. ■ Put in a new belt unit. (See *Replacing the belt unit* on page 106.) ■ If the problem continues, call your dealer or Brother Customer Service.
Short Paper	The length of the paper in the tray is too short for the machine to deliver it to the Face-down output tray.	Open the back cover (back output tray) to let the printed paper out on the back output tray. Remove the printed pages and then press **Go**.
Size Error	The paper size defined in the printer driver is not supported by the defined tray.	Choose a paper size which is supported by each tray. (See *Type and size of paper* on page 2.)
Size Error DX	The paper size defined in the printer driver is not usable for the automatic duplex printing.	Press **Cancel**. Choose a paper size which is supported by the duplex tray. (See *Type and size of paper* on page 2.)
Size Mismatch	The paper in the indicated tray is not the correct size.	Put the same size paper in the paper tray that is selected in the printer driver, and then press **Go**, or select the size of paper you set in the indicated paper tray.
Small Paper	The paper size specified in the printer driver is too small for the machine to deliver it to the Face-down output tray.	Open the back cover (back output tray) to let the printed paper out on the back output tray and then press **Go**.
Toner Error	One or more toner cartridges are not installed correctly.	Pull out the drum unit. Take out all the toner cartridges, and then put them back into the drum unit.

Error messages (continued)

Error message	Cause	Action
Tray 2 Error	The optional lower tray is not installed correctly.	Re-install the optional lower tray.
Unusable Device	An incompatible or defective device has been connected to the USB direct interface.	Remove the USB flash memory drive from the USB Direct Interface.

Maintenance messages

For the maintenance messages, see *Routine Maintenance* on page 89.

Call service messages

Call service message	Action
Print Unable ##	Turn off the machine. Wait a few seconds, then turn it on again. If this does not clear the error, call your dealer or a Brother Customer Service.

Paper handling

First, make sure that you are using paper that meets Brother recommended paper specifications. (See *Type and size of paper* on page 2.)

Problem	Recommendation
The machine does not feed paper.	■ If there is paper in the paper tray, make sure it is straight. If the paper is curled, straighten it before printing. Sometimes it is helpful to remove the paper. Turn the stack over and put it back in the paper tray. If the paper continues to curl, replace the paper. ■ Reduce the amount of paper in the paper tray, and then try again. ■ Make sure that manual feed mode is not chosen in the printer driver. ■ Clean the paper pick-up roller. See *Cleaning the paper pick-up roller* on page 131.
The machine does not feed paper from the MP tray.	■ Make sure that you have chosen **MP tray** in **Paper Source** of the printer driver.
The machine does not feed envelopes.	■ The machine can feed envelopes from the MP tray. You must set up your application to print on the size of envelopes you are using. This is usually done in the page setup or document setup menu of your software. (See your application manual.)
A paper jam has occurred.	■ Clear the jammed paper. (See *Paper jams and how to clear them* on page 146.)
The machine does not print.	■ Make sure that the cable is connected to the machine. ■ Make sure the machine is powered on and that no error messages on the LCD. ■ Make sure that you have chosen the correct printer driver.
When printing on normal paper, it creases.	■ Change the printer driver setting in **Media Type** to a thin setting. ■ Open the back cover and check the fuser rollers for any jammed paper.
The paper slides off the top output tray.	■ Lift up the support flap. 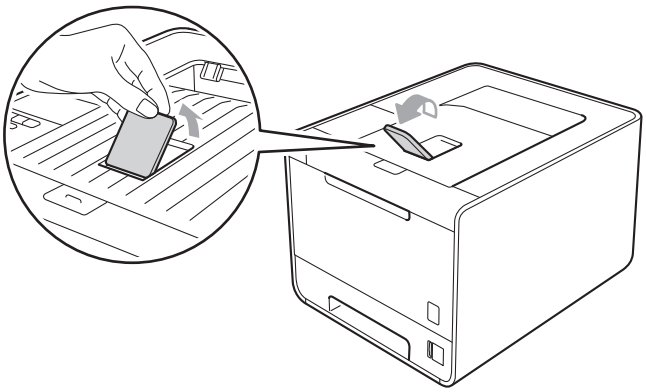

Paper jams and how to clear them

If paper jams inside the machine, the machine will stop. One of the following LCD messages will appear to tell you where to find the jammed paper.

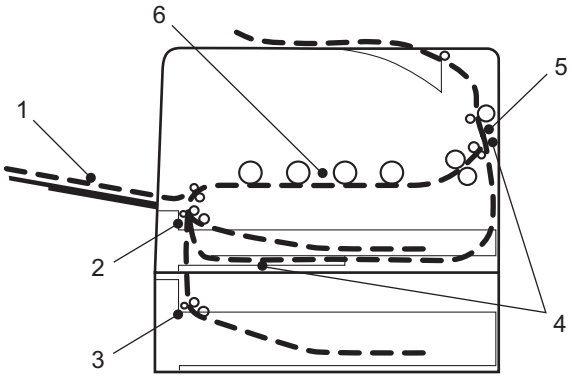

- `Jam MP Tray` (1)

  Paper jam in the MP tray. (See page 147.)

- `Jam Tray 1` (2)

  Paper jam in the standard paper tray (Tray 1). (See page 147.)

- `Jam Tray 2` (3)

  Paper jam in the lower tray (Tray 2). (See page 147.)

- `Jam Duplex` (4)

  Paper jam underneath the standard paper tray (Tray 1) or in the fuser unit. (See page 150.)

- `Jam Rear` (5)

  Paper jam where the paper comes out of the machine. (See page 153.)

- `Jam Inside` (6)

  Paper jam inside the machine. (See page 156.)

If the error message still appears on the LCD after you remove the jammed paper, there may be more paper jammed somewhere else. Check the machine thoroughly.

Note

Always remove all paper from the paper tray and straighten the stack when you add new paper. This helps prevent multiple sheets of paper from feeding through the machine at one time and prevents paper jams.

Jam MP Tray (paper jam in the MP tray)

```
Jam MP Tray
```

If a paper jam occurs inside the MP tray, follow these steps:

1. Remove the paper from the MP tray.
2. Remove any jammed paper from in and around the MP Tray.
3. Fan the paper stack, and then put it back in the MP tray.

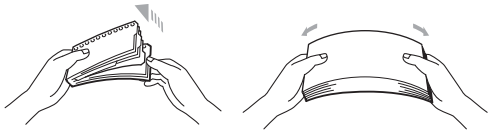

4. When loading paper in the MP tray, make sure that the paper stays under the maximum paper height guides on both sides of the tray.
5. Press **Go** to resume printing.

Jam Tray 1 / Jam Tray 2 (Paper jam inside the paper tray)

Note

The LCD names for the paper trays are as follows.

- Standard paper tray: `Tray1`
- Optional lower tray: `Tray2`

```
Jam Tray 1
```

```
Jam Tray 2
```

If a paper jam occurs inside the paper tray, follow these steps:

1. Pull the paper tray completely out of the machine.

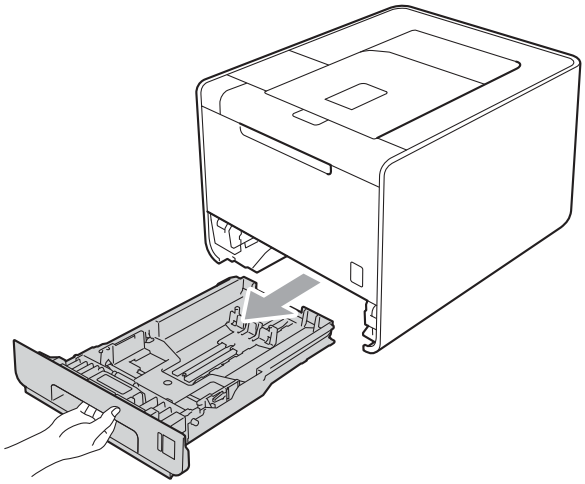

WARNING

DO NOT touch the shaded parts shown in the illustration. These rollers may be rotating at high speed.

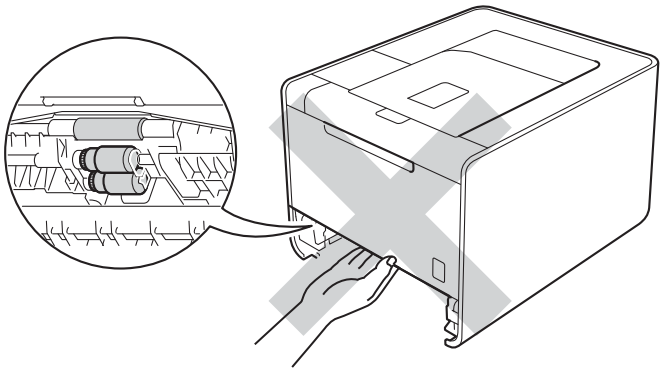

2 Use both hands to slowly pull out the jammed paper.

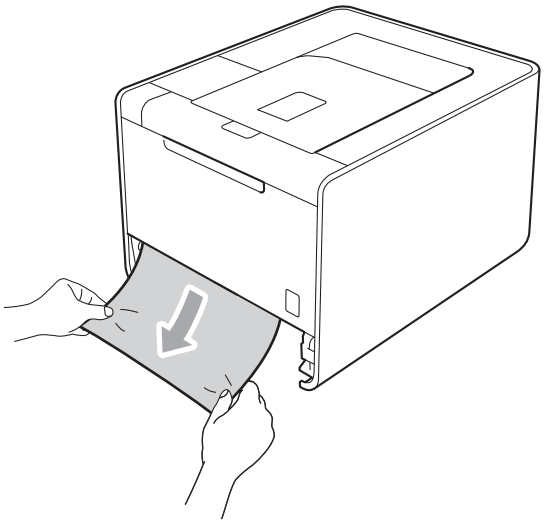

Note

Pulling out the jammed paper downward allows you to remove the paper easier.

3 Make sure that the paper is below the maximum paper mark (▼ ▼ ▼). While pressing the green paper-guide release lever, slide the paper guides to fit the paper size. Make sure that the guides are firmly in the slots.

4 Put the paper tray firmly back in the machine.

Jam Duplex (paper jam underneath the standard paper tray (tray 1) or in the fuser unit)

```
Jam Duplex
```

If a paper jam occurs inside the duplex unit, follow these steps:

1. Leave the machine turned on for 10 minutes to cool down.
2. Pull the paper tray completely out of the machine and check inside the machine.

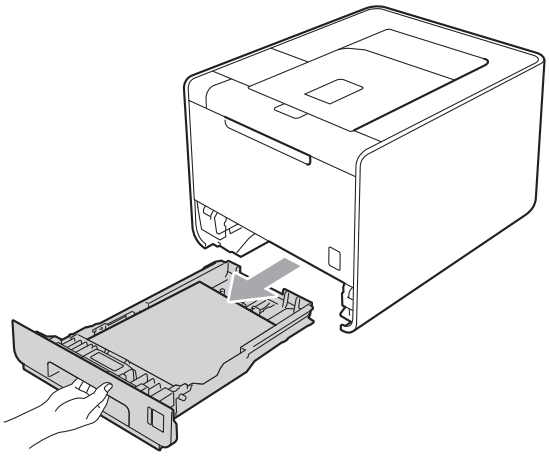

WARNING

DO NOT touch the shaded parts shown in the illustration. These rollers may be rotating at high speed.

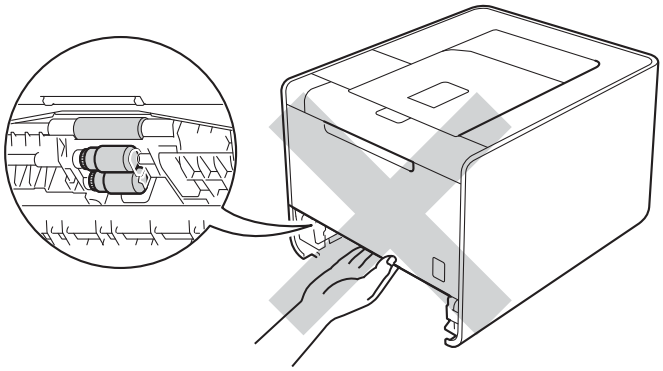

3 If paper is not caught inside the machine, check underneath the paper tray.

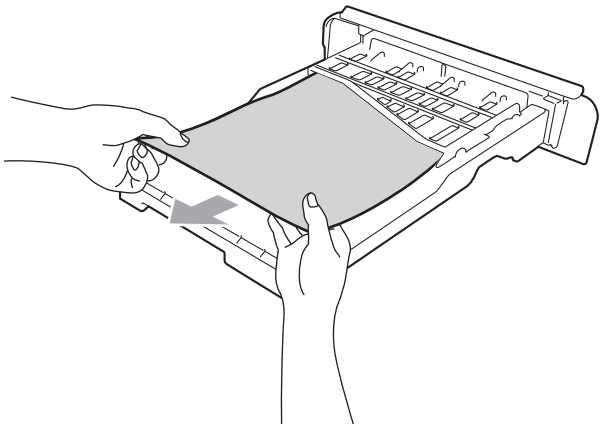

Note

Do not put the paper tray back in at this point.

4 If the paper is not caught in the paper tray, open the back cover.

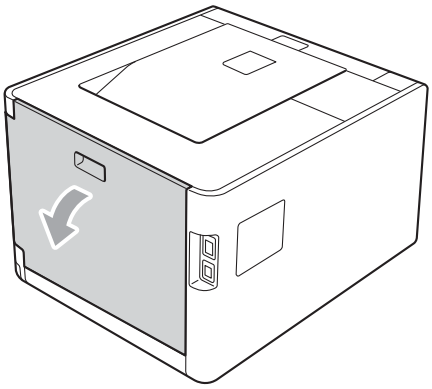

CAUTION

After you have just used the machine, some internal parts of the machine will be extremely hot. Wait for the machine to cool down before you touch the internal parts of the machine.

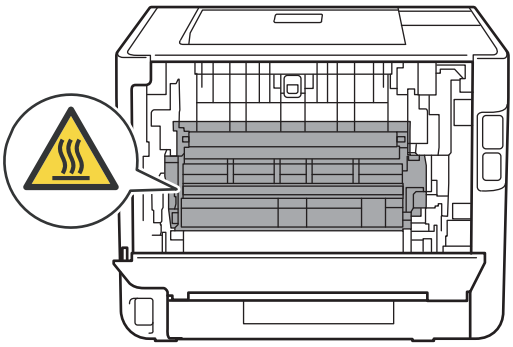

5 Pull out the jammed paper slowly.

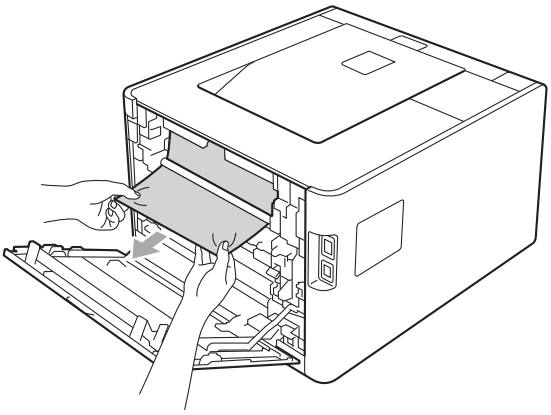

6 Fully close the back cover.

7 Put the paper tray back in the machine.

Jam Rear (Paper jam behind the back cover)

```
Jam Rear
```

If a paper jam occurs behind the back cover, follow these steps:

1. Leave the machine turned on for 10 minutes to cool down.
2. Open the back cover.

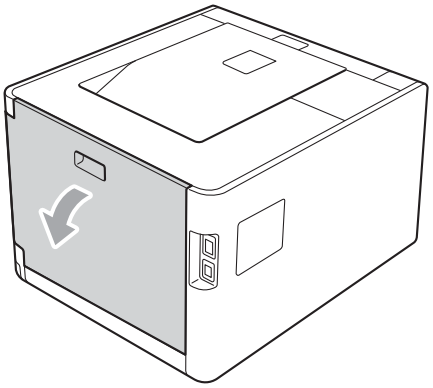

⚠ CAUTION

After you have just used the machine, some internal parts of the machine will be extremely hot. Wait for the machine to cool down before you touch the internal parts of the machine.

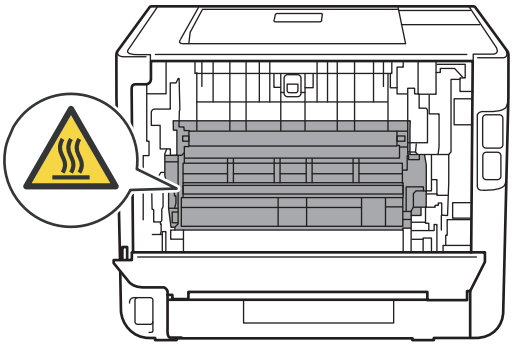

3 Pull the green tabs (2) at the left and right hand sides toward you and fold down the fuser cover (1).

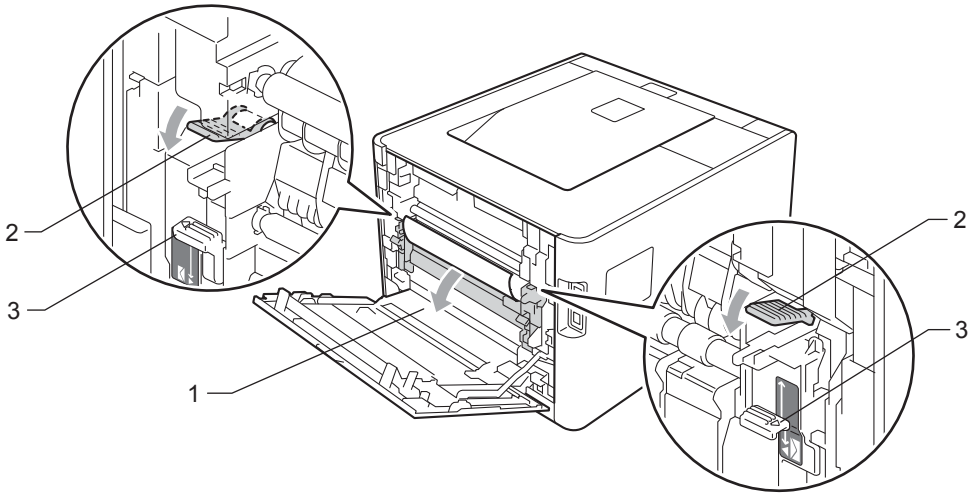

Note

If the envelope levers (3) inside the back cover are pulled down to the envelope position, lift these levers to the original position before pulling the green tabs (2) down.

4 Using both hands, gently pull the jammed paper out of the fuser unit.

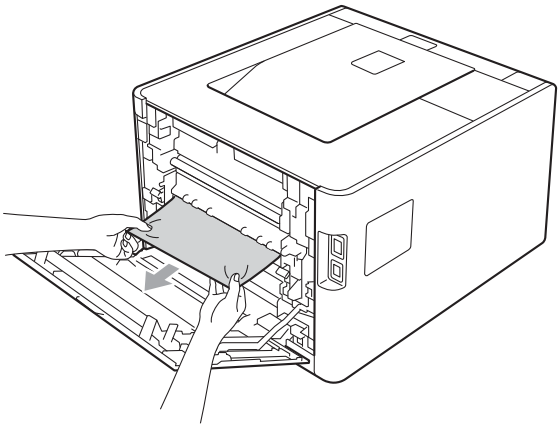

5 Close the fuser cover (1).

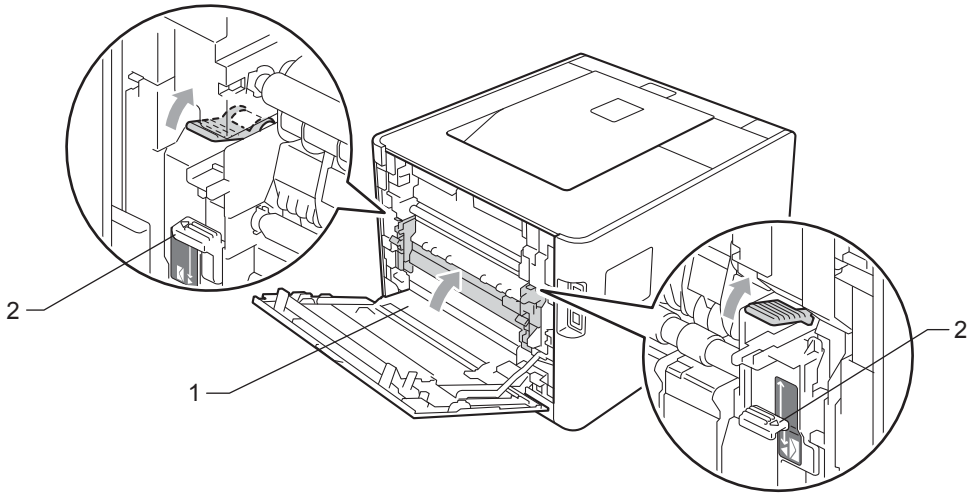

Note

If you print on envelopes, pull down the envelope levers (2) to the envelope position again before closing the back cover.

6 Close the back cover.

Jam Inside (Paper jam inside the machine)

```
Jam Inside
```

If a paper jam occurs inside the machine, follow these steps:

1. Turn off the machine's power switch and unplug the AC power cord.
2. Press the front cover release button and then open the front cover.

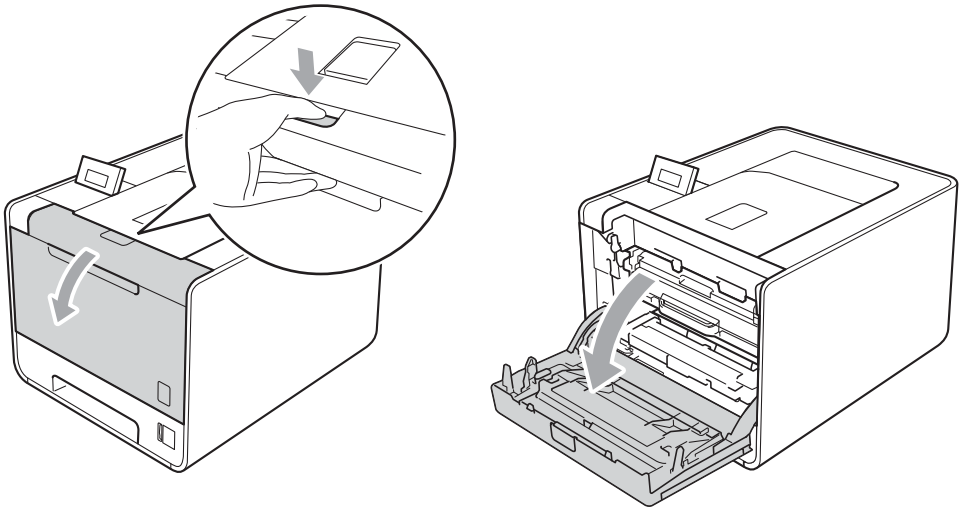

3. Hold the green handle of the drum unit. Pull the drum unit out until it stops.

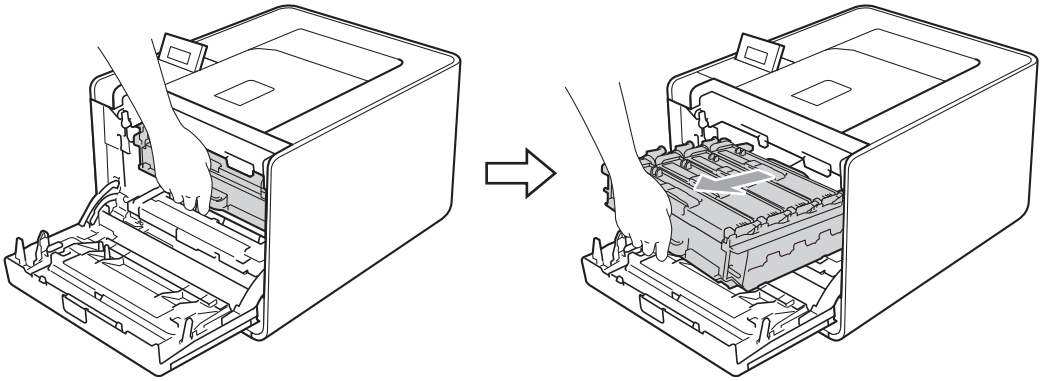

4 Turn the green lock lever (1) at the left of the machine counterclockwise to the release position. Holding the green handles of the drum unit, lift the front of the drum unit and remove it from the machine.

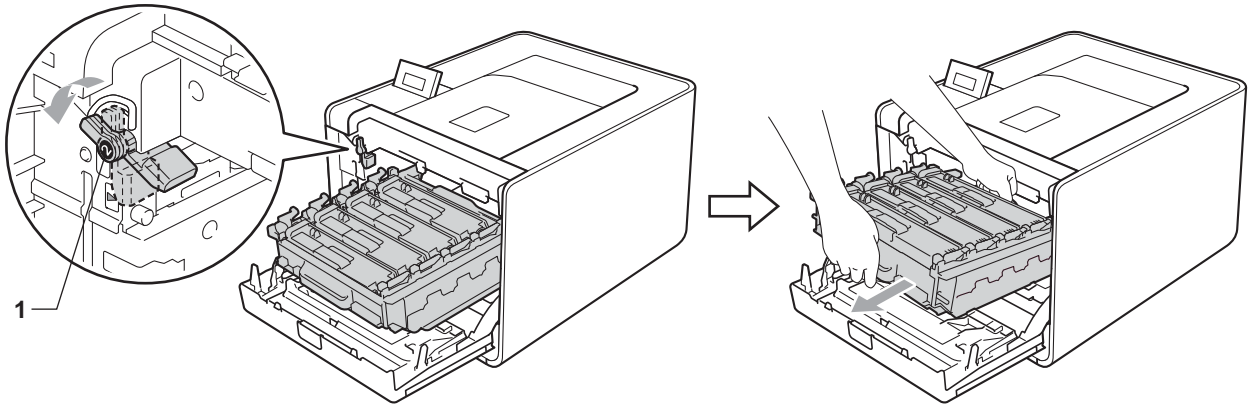

IMPORTANT

- Hold the green handles of the drum unit when you carry it. DO NOT hold the sides of the drum unit.

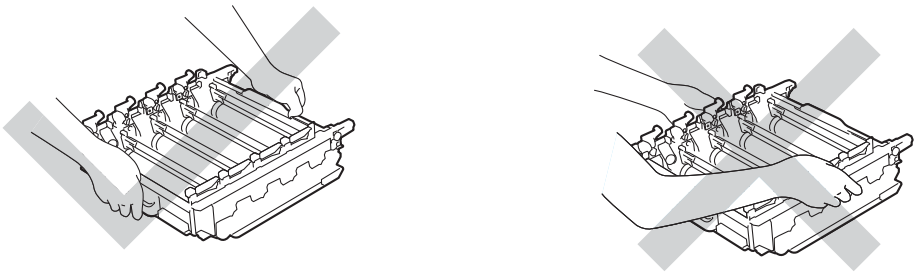

- We recommend that you place the drum unit on a clean, flat surface with a sheet of disposable paper or cloth underneath it in case you accidentally spill or scatter toner.
- To prevent damage to the machine from static electricity, DO NOT touch the electrodes shown in the illustration.

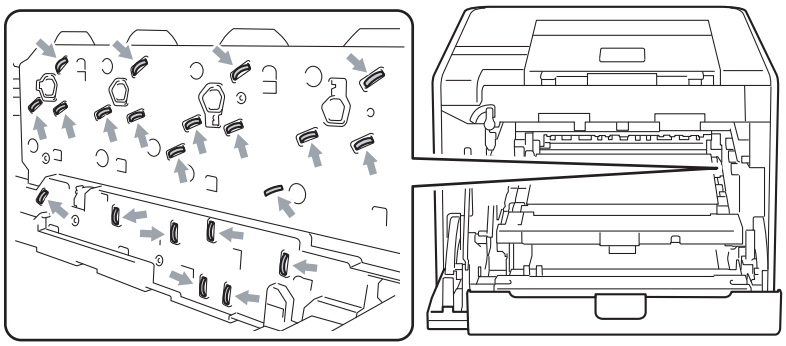

5 Pull out the jammed paper slowly.

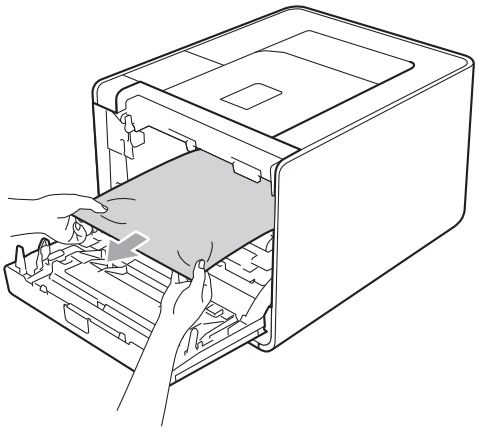

IMPORTANT

To avoid print quality problems, DO NOT touch the shaded parts shown in the illustration.

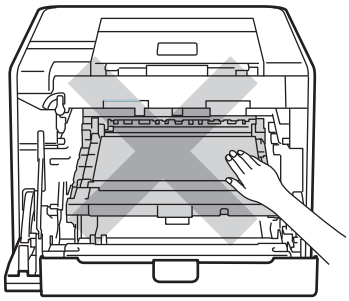

6 Make sure the green lock lever (1) is in the release position as shown in the illustration.

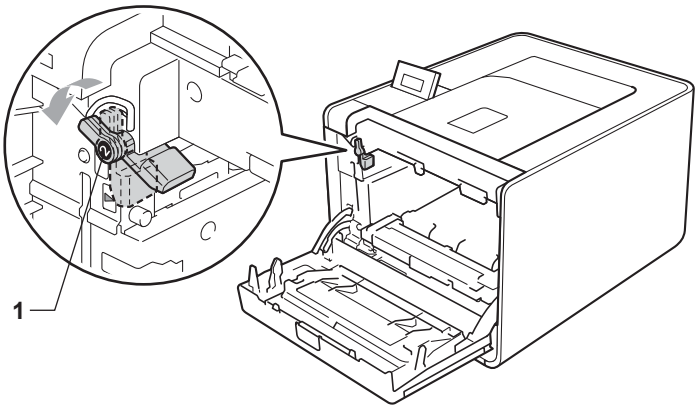

7 Match the guide ends (2) of the drum unit to the ▶ marks (1) on both sides of the machine, then gently slide the drum unit into the machine until it stops at the green lock lever.

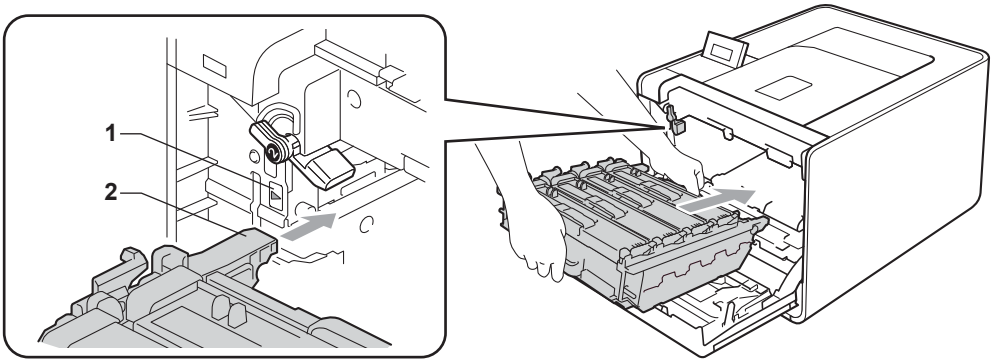

8 Turn the green lock lever (1) clockwise to the lock position.

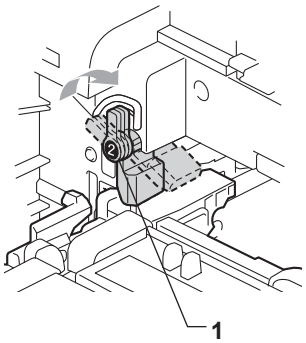

9 Push the drum unit in until it stops.

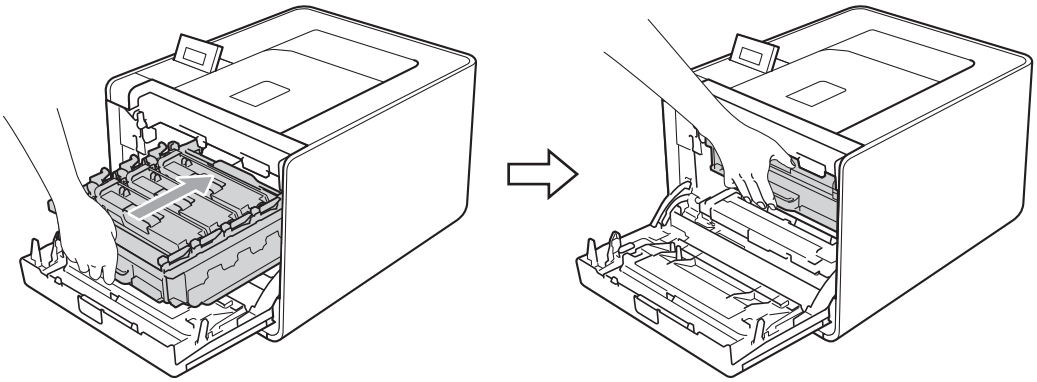

10 Close the front cover of the machine.

Note

If you turn off the machine during Jam Inside, the machine will print incomplete data from your computer. Before you turn on the machine, delete the print spool job on your computer.

11 Plug the machine back in, and then turn on the power switch.

Improving the print quality

If you have a print quality problem, print a test page first (see *Machine Info.* on page 71). If the printout looks good, the problem is probably not the machine. Check the interface cable or try the machine on another computer. If the printout has a quality problem, check the following steps first. And then, if you still have a print quality problem, check the chart below and follow the recommendations.

Note

Brother does not recommend the use of cartridges other than genuine Brother Original cartridges or the refilling of used cartridges with toner from other sources.

1. To get the best print quality, we suggest using the recommended paper. Check that you use the paper that meets our specifications. (See *Acceptable paper and other print media* on page 2.)
2. Check that the drum unit and toner cartridges are installed properly.

Examples of poor print quality	Recommendation
White lines, bands or ribbing across the page 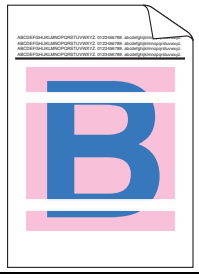	■ Put in a new drum unit. (See *Replacing the drum unit* on page 102.)
Colours are light or unclear on the whole page 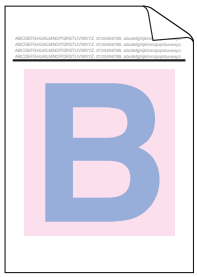	■ Make sure toner save mode is off in the control panel or the printer driver. ■ Make sure that the media type setting in the driver matches the type of paper you are using. (See *Type and size of paper* on page 2.) ■ Shake all four toner cartridges gently. ■ Wipe the scanner windows with a dry lint-free soft cloth. (See *Cleaning the inside of the machine* on page 117.) ■ Perform the calibration. (See *Colour Calibration* on page 83.)

Examples of poor print quality	Recommendation
White streaks or bands down the page 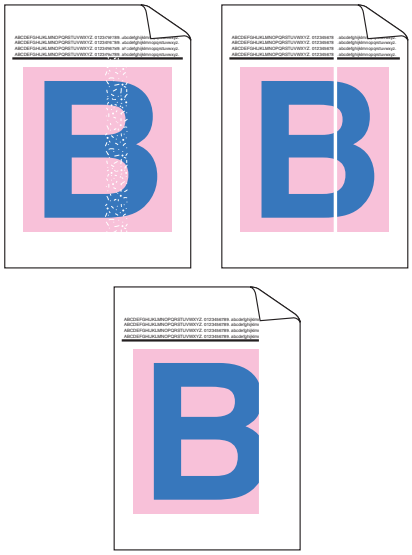	■ Wipe the scanner windows with a dry lint-free soft cloth. (See *Cleaning the inside of the machine* on page 117.) ■ Clean the drum unit. (See *Cleaning the drum unit* on page 125.) ■ Identify the missing colour and put in a new toner cartridge. (See *Replacing the toner cartridges* on page 97.) To identify the colour of the toner cartridge, visit us at http://solutions.brother.com/ to view our FAQs and troubleshooting tips.
Coloured streaks or bands down the page 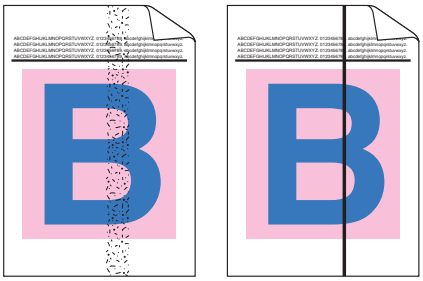	■ Clean all four corona wires (one for each colour) inside the drum unit by sliding the green tab. (See *Cleaning the corona wires* on page 121.) ■ Make sure the corona wire green tabs are at their home positions (▲). ■ Replace the toner cartridge that matches the colour of the streak or band. (See *Replacing the toner cartridges* on page 97.) To identify the colour of the toner cartridge, visit us at http://solutions.brother.com/ to view our FAQs and troubleshooting tips. ■ Put in a new drum unit. (See *Replacing the drum unit* on page 102.)
Coloured lines across the page 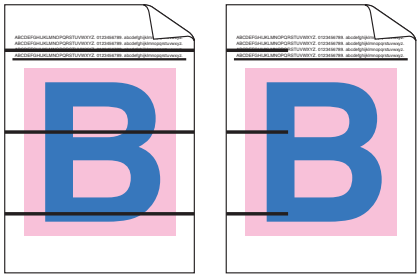	■ If coloured lines appear at 30 mm (1.2 in.) intervals, replace the toner cartridge that matches the colour of the line. (See *Replacing the toner cartridges* on page 97.) To identify the colour of the toner cartridge, visit us at http://solutions.brother.com/ to view our FAQs and troubleshooting tips. ■ If coloured lines appear at 94 mm (3.7 in.) intervals, put in a new drum unit. (See *Replacing the drum unit* on pages 102.)

Examples of poor print quality	Recommendation
White spots or hollow print	■ Make sure that the media type setting in the driver matches the type of paper you are using. (See *Type and size of paper* on page 2.) ■ Check the machine's environment. Conditions such as high humidity can cause white spots or hollow print.
Completely blank or some colours are missing 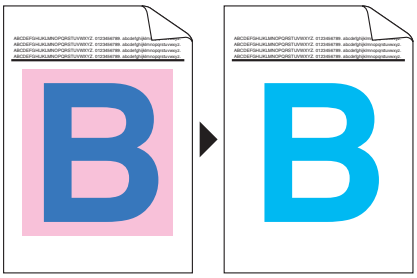	■ Put in a new toner cartridge. (See *Replacing the toner cartridges* on page 97.) To identify the colour of the toner cartridge, visit us at http://solutions.brother.com/ to view our FAQs and troubleshooting tips. ■ Put in a new drum unit. (See *Replacing the drum unit* on page 102.)
Coloured spots at 94mm 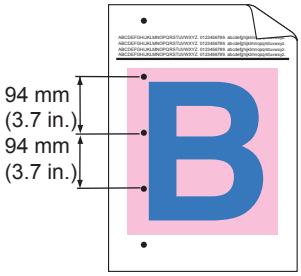	■ If the problem is not solved after printing a few pages, the drum may have foreign material, such as glue from a label, stuck on the drum surface. Clean the drum unit. (See *Cleaning the drum unit* on page 125.) ■ Put in a new drum unit. (See *Replacing the drum unit* on page 102.)
Coloured spots at 30mm 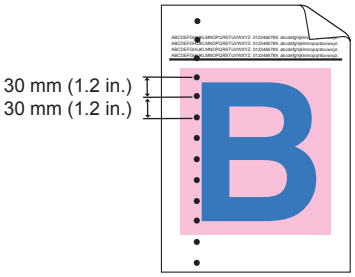	■ Identify the colour causing the problem and put in a new toner cartridge. (See *Replacing the toner cartridges* on page 97.) To identify the colour of the toner cartridge, visit us at http://solutions.brother.com/ to view our FAQs and troubleshooting tips.

Examples of poor print quality	Recommendation
Toner scatter or toner stain 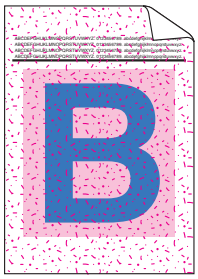	■ Check the machine's environment. Conditions such as high humidity and high temperatures may cause this print quality problem. ■ Identify the colour causing the problem and put in a new toner cartridge. (See *Replacing the toner cartridges* on page 97.) To identify the colour of the toner cartridge, visit us at http://solutions.brother.com/ to view our FAQs and troubleshooting tips. ■ If the problem continues, put in a new drum unit. (See *Replacing the drum unit* on page 102.)
The colour of your printouts is not what you expected	■ Make sure toner save mode is off in the control panel or the printer driver. ■ Perform the calibration. (See *Colour Calibration* on page 83.) ■ Adjust the colour by using the custom setting in the driver and by using the control panel. Colours the machine can print and colours you see on a monitor are different. The machine may not be able to reproduce the colours on your monitor. (See *Color Correction* on page 80.) ■ If colours appear in the printed grey areas, make sure there is a check in the **Improve Grey Colour** check box of the printer driver. See **Improve Grey Colour** in *Settings Dialog* on page 32 (For Windows® printer driver), *Advanced options* on page 45 (For Windows® BR-Script printer driver) or *Print Settings* on page 54 (For Macintosh printer driver). ■ If shaded areas look dull, remove the check from the **Improve Grey Colour** check box of the printer driver. ■ If a printed black graphic is too light, choose **Enhance Black Printing** mode in the printer driver. See **Enhance Black Printing** in *Settings Dialog* on page 32 (For Windows® printer driver), *Advanced options* on page 45 (For Windows® BR-Script printer driver) or *Print Settings* on page 54 (For Macintosh printer driver). ■ Identify the colour causing the problem and put in a new toner cartridge. (See *Replacing the toner cartridges* on page 97.) ■ Put in a new drum unit. (See *Replacing the drum unit* on page 102.)
All one colour 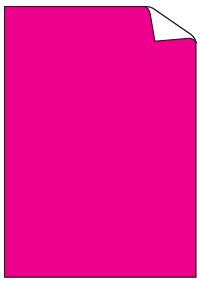	■ Put in a new drum unit. (See *Replacing the drum unit* on page 102.)

Examples of poor print quality	Recommendation
Colour misregistration 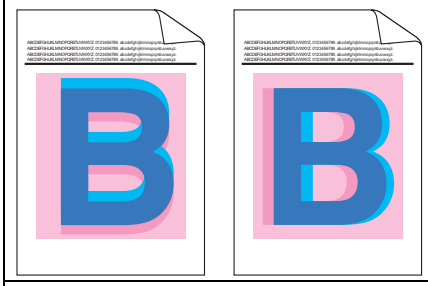	■ Make sure that the machine is on a solid level surface. ■ Perform the auto colour registration using the control panel (see *Auto Registration* on page 83) or perform the manual colour registration using the control panel (see *Manual Registration* on page 84). ■ Put in a new drum unit. (See *Replacing the drum unit* on page 102.) ■ Put in a new belt unit. (See *Replacing the belt unit* on page 106.)
Uneven density appears periodically across the page	■ Perform the calibration. (See *Colour Calibration* on page 83.) ■ Identify the colour that is uneven and put in a new toner cartridge for that colour. (See *Replacing the toner cartridges* on page 97.) To identify the colour of the toner cartridge, visit us at http://solutions.brother.com/ to view our FAQs and troubleshooting tips. ■ Put in a new drum unit. (See *Replacing the drum unit* on page 102.)
Missing image at thin line	■ Make sure toner save mode is off in the control panel or the printer driver. ■ Change the print resolution. ■ If you use a Windows printer driver, choose Improve pattern printing or Improve Thin Line in Print Setting of Basic tab. (See *Settings Dialog* on page 32.)
Wrinkle 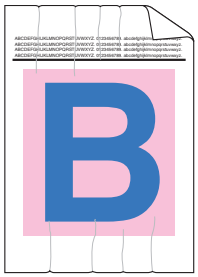	■ Change to the recommended type of paper. ■ Make sure that the back cover is closed properly. ■ Make sure that the two grey levers inside the back cover are in the up position. ■ Make sure that the media type setting in the driver matches the type of paper you are using. (See *Type and size of paper* on page 2.)
Offset image 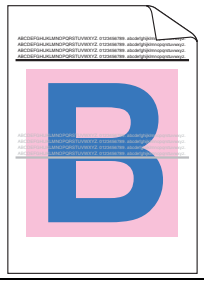	■ Make sure that the media type setting in the driver matches the type of paper you are using. (See *Type and size of paper* on page 2.) ■ Make sure that the two grey levers inside the back cover are in the up position. ■ Check the machine's environment. Conditions such as low humidity and low temperatures may cause this print quality problem. ■ Put in a new drum unit. (See *Replacing the drum unit* on page 102.)

Examples of poor print quality	Recommendation
Poor fixing 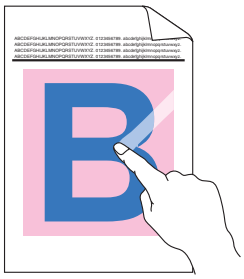	■ Make sure that the media type setting in the driver matches the type of paper you are using. (See *Type and size of paper* on page 2.) ■ Make sure that the two grey levers inside the back cover are in the up position. ■ Choose **Improve Toner Fixing** mode in the printer driver. See **Improve Print Output** in *Improve Print Output* on page 40 (For Windows® printer driver), *Advanced options* on page 45 (For Windows® BR-Script printer driver) or *Print Settings* on page 54 (For Macintosh printer driver). If this selection does not provide enough improvement, change the printer driver setting in **Media Type** to a thick setting.
Curled or wavy 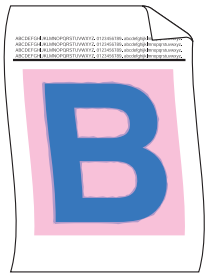	■ Choose **Reduce Paper Curl** mode in the printer driver when you do not use our recommended paper. See **Improve Print Output** in *Improve Print Output* on page 40 (For Windows® printer driver), *Advanced options* on page 45 (For Windows® BR-Script printer driver) or *Print Settings* on page 54 (For Macintosh printer driver). ■ If you do not use the machine often, the paper may have been in the paper tray too long. Turn over the stack of paper in the paper tray. Also, fan the paper stack and then rotate the paper 180° in the paper tray. ■ Store the paper where it will not be exposed to high temperatures and high humidity. ■ Open the back cover (back output tray) to let the printed paper out on the back out put tray.
Envelope creases 	■ Make sure that the envelope levers inside the back cover are pulled down to the envelope position when you print to the envelope. 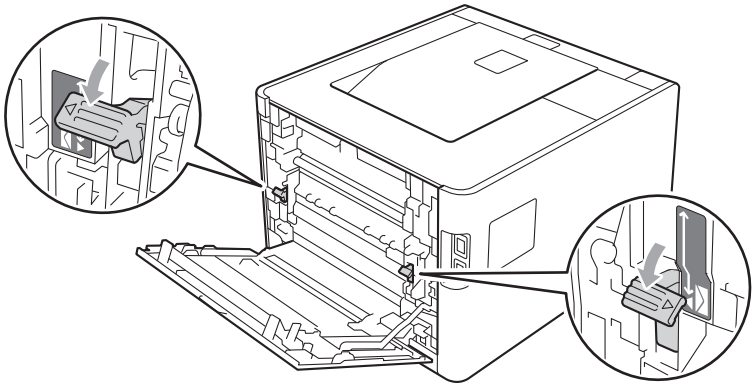 ■ If creases occur with the envelope levers in the envelope position, print with the back cover opened and feed one envelope at a time from the MP tray.

Solving print problems

Problem	Recommendation
The machine will not turn on.	■ Adverse conditions on the power connection (such as lightning or a power surge) may have triggered the machine's internal safety mechanisms. Turn the machine off and unplug the power cord. Wait for ten minutes, then plug in the power cord and turn the machine on. ■ If there is still no power, connect the machine to a different AC power outlet.
The machine prints unexpectedly or it prints garbage data.	■ Make sure that the machine cable is not too long. We recommend that you use a USB cable that is no longer than 2 meters (6.5 feet). ■ Make sure that the machine cable is not damaged or broken. ■ If you are using an interface-switching device, remove it. Connect your computer directly to your machine, and then try again. ■ Make sure that you have chosen the correct printer driver with ‘Set as Default Printer’. ■ Make sure that the machine is not connected to the same port that is also connected to a storage device or scanner. Take away all other devices and connect the port only to the machine. ■ Turn off **Status Monitor**.
The machine cannot print full pages of a document. An error message `Out of Memory` appears.	■ Press **Go** to print the remaining data in the machine memory. Cancel the print job if you want to delete the remaining data in the machine memory. (See *Buttons* on page 64.) ■ Reduce the complexity of your document or select a lower print resolution. ■ Add more memory. (See *Installing extra memory* on page 87.)
The headers or footers appear when the document displays on the screen but they do not show up when it is printed.	■ Adjust the top and bottom margins of your document.
The machine does not change to Direct Print mode when a USB flash memory drive is connected to the USB direct interface.	When the machine is in Deep Sleep mode, the machine does not wake up when a USB flash memory drive is connected to the USB direct interface. Press **Go** to wake up the machine to display the Direct Print menu on the LCD.

Network problems

For problems concerning using your machine on a Network, see the *Network User's Guide*.

The latest Network User's Guide in PDF format is available by accessing the Brother Solutions Center (http://solutions.brother.com/).

Other problems

For Macintosh with USB

Problem	Recommendation
The machine does not appear in **Printer Setup Utility** (Mac OS X 10.4.11) or **Print & Fax** in **System Preferences** (Mac OS X 10.5.x and 10.6.x).	■ Make sure the machine is powered on and that there are no error messages on the LCD. ■ Make sure that the USB interface cable is connected directly to the Macintosh and that it is connected to the USB port of the machine. ■ Make sure the printer driver is installed correctly.
Unable to print from the application.	■ Make sure that the supplied Macintosh printer driver is installed in the Hard Disk and that it is chosen with **Printer Setup Utility** (Mac OS X 10.4.11) or **Print & Fax** in **System Preferences** (Mac OS X 10.5.x and 10.6.x).

BR-Script 3

Problem	Recommendation
The print speed slows down.	Add optional memory. (See *Installing extra memory* on page 87.)
The machine cannot print EPS data that includes binary.	You need the following settings to print EPS data: 1 For Windows® 7 and Windows Server® 2008 R2: Click the **Start** button and **Devices and Printers**. For Windows Vista®: Click **Start** button, **Control Panel**, **Hardware and Sound**, and then **Printers**. For Windows® XP and Windows Server® 2003/2008: Click **Start** button, and select **Printers and Faxes**. For Windows® 2000: Click **Start** button, and select **Settings** and then **Printers**. 2 For Windows® 7 and Windows Server® 2008 R2: Right-click the **Brother HL-4570CDW (HL-4150CDN) Series** icon and select **Brother HL-4570CDW (HL-4150CDN) BR-Script3**. For Windows® 2000, Windows® XP, Windows Vista® and Windows Server® 2003/2008: Right-click the **Brother HL-4570CDW (HL-4150CDN) BR-Script3** icon and select **Properties**. 3 From the **Device Settings** tab, choose **TBCP** (Tagged binary communication protocol) in **Output Protocol**.

A Appendix

Machine specifications

Note

This chapter provides a summary of the machines' specifications. For additional specifications, visit http://www.brother.com/ for details.

Engine

Model			HL-4150CDN	HL-4570CDW
Technology			Electrophotographic Laser Printer (Single-pass)	
Print speed [1] [2] (A4 size/ Letter size)	Single side print	Monochrome	Up to 24 ppm (A4 size) [3], Up to 25 ppm (Letter size) [3]	Up to 28 ppm (A4 size) [3], Up to 30 ppm (Letter size) [3]
		Full colour	Up to 24 ppm (A4 size) [3], Up to 25 ppm (Letter size) [3]	Up to 28 ppm (A4 size) [3], Up to 30 ppm (Letter size) [3]
	Duplex Print	Monochrome	Up to 14 sides per minute (A4 size) [3], Up to 14 sides per minute (Letter size) [3]	
		Full colour	Up to 14 sides per minute (A4 size) [3], Up to 14 sides per minute (Letter size) [3]	
First print time [4] (from Ready mode and standard tray)			Less than 16 sec	
Resolution	Windows® 2000 Professional, Windows® XP Home Edition, Windows® XP Professional, Windows® XP Professional x64 Edition, Windows Server® 2003, Windows Server® 2003 x64 Edition, Windows Vista®, Windows Server® 2008, Windows Server® 2008 R2, Windows® 7		2400 dpi (2400 × 600) quality 600 × 600 dpi	
	DOS		600 × 600 dpi	
	Mac OS X 10.4.11, 10.5.x, 10.6.x		2400 dpi (2400 × 600) quality 600 × 600 dpi	
	Linux		600 × 600 dpi	

[1] The printing speed may change depending on the type of document you print.

[2] Print speed may be slower when the machine is connected by wireless LAN.

[3] From standard paper tray.

[4] First print out time may change if the machine is calibrating or registering itself.

Controller

Model		HL-4150CDN	HL-4570CDW
Processor		400 MHz	
Memory	Standard	128 MB	
	Optional	1 slot: DDR2 SO-DIMM (144-pin) up to 256 MB	
Interface		Hi-speed USB 2.0, 10BASE-T/100BASE-TX Ethernet	Hi-speed USB 2.0, 10BASE-T/100BASE-TX Ethernet, IEEE802.11b/g Wireless LAN
Network Connectivity	Protocols	TCP/IP (Standard 10BASE-T/100BASE-TX Ethernet) [1]	
	Management tool	BRAdmin Light [2] BRAdmin Professional 3 [3] Web BRAdmin [4] Web Based Management [5]	
Emulation		PCL6, BR-Script 3 (PostScript® 3™) [6]	
Resident fonts	PCL	66 scalable fonts, 12 bitmap fonts, 13 bar codes [7]	
	PostScript® 3™	66 scalable fonts	

1 See the Network User's Guide for details on the supported network protocols.

2 Brother original Windows® and Macintosh utility for printer and print server management. Install from the supplied CD-ROM.

3 Brother original Windows® utility for printer and print server management. Download from http://solutions.brother.com/.

4 Server based management utility. Download from http://solutions.brother.com/.

5 Printer and print server management through Web Based Management (Web browser).

6 PostScript® 3™ language emulation.

7 Code39, Interleaved 2 of 5, FIM (US-PostNet), Post Net (US-PostNet), EAN-8, EAN-13, UPC-A, UPC-E, Codabar, ISBN (EAN), ISBN (UPC-E), Code128 (set A, set B, set C), EAN-128 (set A, set B, set C)

Software

Model		HL-4150CDN	HL-4570CDW
Printer driver	Windows® [1]	Host-based driver for Windows® 2000 Professional, Windows® XP Home Edition, Windows® XP Professional, Windows® XP Professional x64 Edition, Windows Server® 2003 [4], Windows Server® 2003 x64 Edition [4], Windows Vista®, Windows Server® 2008 [4], Windows Server® 2008 R2 [4], Windows® 7	
		BR-Script3 (PPD file) for Windows® 2000 Professional, Windows® XP Home Edition, Windows® XP Professional, Windows® XP Professional x64 Edition, Windows Server® 2003 [4], Windows Server® 2003 x64 Edition [4], Windows Vista®, Windows Server® 2008 [4], Windows Server® 2008 R2 [4], Windows® 7	
	Macintosh	Machintosh Printer Driver for Mac OS X 10.4.11, 10.5.x and 10.6.x	
		BR-Script3 (PPD file) for Mac OS X 10.4.11, 10.5.x and 10.6.x	
	Linux [2] [3]	Linux driver for CUPS printing system (x86 and x64 environments)	
		Linux driver for LPD/LPRng printing system (x86 and x64 environments)	
Utilities		Driver Deployment Wizard [5]	

[1] For the latest driver updates, visit http://solutions.brother.com/.

[2] Download the printer driver for Linux from http://solutions.brother.com/.

[3] Depending on Linux distributions, the driver may not be available.

[4] Network use only

[5] The Driver Deployment Wizard automates the installation of printers in a peer-to-peer network (Windows® only).

A

Direct Print feature

Model		HL-4150CDN	HL-4570CDW
Direct Print	File types	PDF version 1.7 [1], JPEG, Exif+JPEG, PRN (created by HL-4150CDN or HL-4570CDW printer driver) [2], TIFF(scanned by all Brother MFC or DCP models), XPS version 1.0	

[1] Data that includes a JBIG2 image file, JPEG2000 image file, or a transparency file is not supported.

[2] See *Creating a PRN or PostScript® 3™ file for direct printing* on page 24.

Control panel

Model	HL-4150CDN	HL-4570CDW
LED	2 LEDs: Data LED and Error LED	
LCD	2 Lines (16 digits per line)	
Button	7 Buttons: Go, Cancel, Secure, OK, Back and 2 scroll buttons	

Paper handling

Model		HL-4150CDN	HL-4570CDW
Paper Input [1]	Multi-purpose Tray	50 sheets	
	Paper tray (Standard)	250 sheets	
	Lower tray unit (Option)	500 sheets	
Paper Output [1]	Face-down	150 sheets	
	Face-up (this is the Back cover when open)	1 sheet	
Duplex	Manual duplex	Yes	
	Automatic duplex	Yes	

[1] Calculated with 80 g/m^2 (20 lb) paper

Media specifications

Model		HL-4150CDN	HL-4570CDW
Media types	Multi-purpose Tray	Plain paper, Thin paper, Thick paper, Thicker paper, Recycled paper, Bond paper, Label, Envelopes, Env.Thin, Env.Thick, Glossy Paper	
	Paper tray (Standard)	Plain paper, Thin Paper, Recycled paper	
	Lower tray unit (Option)		
	Automatic duplex printing	Plain paper, Thin Paper, Recycled paper, Glossy Paper	
Media weights	Multi-purpose Tray	60 to 163 g/m^2 (16 to 43 lb)	
	Paper tray (Standard)	60 to 105 g/m^2 (16 to 28 lb)	
	Lower tray unit (Option)		
	Automatic duplex printing		
Media sizes	Multi-purpose Tray	Width: 69.8 to 216 mm (2.75 to 8.5 in.) Length: 116 to 406.4 mm (4.57 to 16 in.)	
	Paper tray (Standard)	A4, Letter, Legal [1], B5 (ISO/JIS), Executive, A5, A5 (Long Edge), A6, B6 (ISO), Folio	
	Lower tray unit (Option)	A4, Letter, Legal [1], B5 (ISO/JIS), Executive, A5, B6 (ISO), Folio	
	Automatic duplex printing	A4	

[1] Legal size paper is not available in some regions outside USA and Canada.

A

Supplies

Model			HL-4150CDN	HL-4570CDW	Model Name
Toner Cartridge	Standard	Black	Approx. 2,500 pages A4/Letter pages [1]		TN-340BK
		Cyan, Magenta, Yellow	Approx. 1,500 pages A4/Letter pages [1]		TN-340C, TN-340M, TN-340Y
	High Capacity	Black	-		
		Cyan, Magenta, Yellow	Approx. 3,500 pages A4/Letter pages [1]		TN-345C, TN-345M, TN-345Y
	Super High Capacity	Black	Approx. 6,000 pages A4/Letter pages [1]		TN-348BK
		Cyan, Magenta, Yellow	Approx. 6,000 pages A4/Letter pages [1]		TN-348C, TN-348M, TN-348Y
Drum Unit			Approx. 25,000 pages A4/Letter pages [2]		DR-340CL
Belt Unit			Approx. 50,000 pages A4/Letter pages		BU-300CL
Waste Toner Box			Approx. 50,000 pages A4/Letter pages		WT-300CL

[1] Approx. cartridge yield is declared in accordance with ISO/IEC 19798.

[2] Drum life is approximate and may vary by type of use.

Note

Availability of toner cartridges differs from one country to another. Visit the Brother Solutions Center at http://solutions.brother.com/ or contact your local Brother office for further details.

A

Dimensions / weights

Model	HL-4150CDN	HL-4570CDW
Dimensions (W × D × H)	410 × 486 × 313 mm (16.1 × 19.1 × 12.3 in.)	
Weights	Approx. 21.0 kg (46.3 lb)	

Other

Model			HL-4150CDN	HL-4570CDW
Power Source			220 - 240 V AC 50/60Hz	
Power consumption [1] (Average)		Printing	Approx. 560 W at 25 °C (77 °F)	
		Ready	Approx. 65 W at 25 °C (77 °F)	
		Sleep (WLAN: On)	N/A	Approx. 8 W
		Deep Sleep	Approx. 0.9 W	
Noise level	Sound pressure	Printing	LPAm = 57 dB (A)	
		Ready	LPAm = 33 dB (A)	
	Sound power	Printing (Monochrome)	LWAd = 6.71 B (A) [3]	LWAd = 6.63 B (A) [3]
		Printing (Colour)	LWAd = 6.69 B (A) [3]	LWAd = 6.64 B (A) [3]
		Ready	LWAd = 4.07 B (A)	LWAd = 4.01 B (A)
Ecology	Power save		Available	
	Toner save [2]		Available	

1 USB connections to PC

2 We do not recommend Toner Save for printing Photo or greyscale images.

3 Office equipment with LWAd>6.30 B (A) is not suitable for use in rooms where people do primarily intellectual work. Such equipment should be placed in separate rooms because of the noise emission.

A

Computer requirements

Computer Platform & Operating System Version		Processor Minimum Speed	Minimum RAM	Recommended RAM	Hard Disk Space to install	Supported PC Interface [2]
Windows® Operating System [1]	Windows® 2000 Professional	Intel® Pentium® II or equivalent	64 MB	256 MB	50 MB	USB, 10/100 Base-TX (Ethernet), Wireless 802.11b/g
	Windows® XP Home Edition		128 MB			
	Windows® XP Professional					
	Windows® XP Professional x64 Edition	64-bit (Intel® 64 or AMD64) supported CPU	256 MB	512 MB		
	Windows Vista®	Intel® Pentium® 4 or equivalent 64-bit (Intel® 64 or AMD64) supported CPU	512 MB	1 GB		
	Windows® 7	Intel® Pentium® 4 or equivalent 64-bit (Intel® 64 or AMD64) supported CPU	1 GB (32-bit) 2 GB (64-bit)	1 GB (32-bit) 2 GB (64-bit)		
	Windows Server® 2003	Intel® Pentium® III or equivalent	256 MB	512 MB		
	Windows Server® 2003 x64 Edition	64-bit (Intel® 64 or AMD64) supported CPU				
	Windows Server® 2008	Intel® Pentium® 4 or equivalent 64-bit (Intel® 64 or AMD64) supported CPU	512 MB	2 GB		
	Windows Server® 2008 R2	64-bit (Intel® 64 or AMD64) supported CPU				
Macintosh Operating System	OS X 10.4.11 and 10.5.x	PowerPC G4/G5 Intel® Core™ Processor	512 MB	1 GB	80 MB	
	OS X 10.6.x	Intel® Core™ Processor	1 GB	2 GB		

[1] Microsoft® Internet Explorer® 6.0 or greater.

[2] Third party USB ports are not supported.

For the latest driver updates, visit http://solutions.brother.com/.

A

Important information for choosing your paper

This section gives information to help you choose paper to use with this machine.

Note

If you use paper that is not recommended, a paper jam or misfeed may occur in the machine.

Before you buy a large quantity of paper

Make sure that the paper is suitable for the machine.

Paper for plain paper copies

Paper is divided by usage, such as paper for printing and paper for copying. The usage is usually written on the paper's package. Check the package to see whether it is suitable for laser printers. Use paper that is suitable for laser printers.

Basis weight

The basis weight of the paper in general use varies in different countries. We recommend that you use paper that weighs 75 to 90 g/m^2 (20 to 24 lb), although this machine is able to cope with thinner or thicker paper than these weights.

Unit	Europe	USA
g/m^2	80 to 90	75 to 90
lb		20 to 24

Long grain and short grain

The pulp fiber of the paper is aligned during paper manufacturing. And paper can be classified into two types, long grain and short grain.

Long grain paper fibers run in the same direction as the long edge of the paper. Short grain paper fibers run perpendicular to the long edge of the paper. Though most plain paper for copying is long grain, some is short grain. We recommend that you use long grain paper for this machine. Short grain paper is too weak for the paper transport of the machine.

Acid paper and neutralized paper

Paper can be classified as either acid paper or neutralized paper.

Though modern paper manufacture methods started with acid paper, neutralized paper is recently taking the place of acid paper because of environmental issues.

However, many forms of acid paper can be found in recycled paper. We recommend that you use neutralized paper for this machine.

You can use an acid paper check pen to distinguish acid paper from neutral paper.

Print surface

The characteristics of the face side and reverse side of a sheet of paper may vary a little.

Usually, the opening side of the paper ream package is the print side. Follow the instructions on the paper package. Typically, the print side is indicated by an arrow.

Moisture content

Moisture content is the amount of water left in the paper after manufacture. It is one of the important characteristics of the paper. This can change greatly depending on the storage environment, although usually paper contains about 5% water by weight. Because paper often absorbs water, the amount of water can sometimes be about 10% in a high humidity environment. When the amount of water increases, the characteristics of the paper changes greatly. The fixing of the toner may become worse. For storage of the paper and during use, we recommend that the humidity of the surrounding environment be between 50% and 60%.

Rough estimate of basis weight

g/m^2	lb	
	Bond	Index
60	16	
64	17	
75	20	
90	24	
105	28	
120	32	
135	36	
163	43	90
200	53	110

Paper size

Paper size	mm	in.
Letter		8.5 × 11 in.
Legal		8.5 × 14 in.
Executive		7.25 × 10.5 in.
A4	210 × 297 mm	
A5	148 × 210 mm	
A5 (Long Edge)	210 × 148 mm	
A6	105 × 148 mm	
Envelope Monarch		3.875 × 7.5 in.
Envelope Com-10		4.12 × 9.5 in.
Envelope DL	110 × 220 mm	
Envelope C5	162 × 229 mm	
B5 (JIS)	182 × 257 mm	
B5 (ISO)	176 × 250 mm	
B6 (JIS)	128 × 182 mm	
B6 (ISO)	125 × 176 mm	
Folio		8.5 × 13 in.
Envelope DL-L	220 × 110 mm	
3 × 5		3 × 5 in.
Hagaki [1]	100 × 148 mm	

[1] Postcard with the size specified by Japan Post Service Co., LTD

Symbol and character sets

For the HP LaserJet emulation modes, you can choose the symbol and character sets using a Web Based Management (Web browser) or the control panel buttons.

How to use Web Based Management (Web browser)

To use Web Based Management (Web browser), follow the steps below.

Note

We recommend Internet Explorer® 6.0 (or greater) or Firefox 3.0 (or greater) for Windows® and Safari 3.0 (or greater) for Macintosh. Please also make sure that JavaScript and cookies are always enabled in whichever browser you use. To use a Web browser, you will need to know the IP address of the print server.

1. Start your Web browser.
2. Type "`http://machine's IP address/`" into your browser. (Where "`machine's IP address`" is the machine's IP address)
   - For example:

     `http://192.168.1.2/`

Note

- If you have edited the hosts file on your computer or are using a Domain Name System (DNS), you can also enter the DNS name of the print server.
- For windows® users, as the print server supports TCP/IP and NetBIOS, you can also enter the NetBIOS name of the print server. The NetBIOS name can be seen on the Network Configuration List. The NetBIOS name assigned is the first 15 characters of the node name and by default it will appear as "BRNxxxxxxxxxxxx" for a wired network or "BRWxxxxxxxxxxxx" for a wireless network.
- For Macintosh users, you can also have easy access to Web Based Management by clicking the machine icon on **Status Monitor** screen.

3. Click **Printer Settings**.
4. Enter a user name and a password.

Note

The login name for the Administrator is "`admin`" (case sensitive) and the default password is "`access`".

5. Click **OK**.
6. Choose the **HP LaserJet** tab and click **Font Setup**. Choose a symbol set you want to use from the **Symbol Set** list box.

Symbol and character sets list

OCR symbol sets

When you choose the OCR-A or OCR-B font, the matching symbol set is always used.
OCR A (0O)
OCR B (1O)

HP LaserJet mode

ABICOMP B/P (13P)
ABICOMP INTL (14P)
DESKTOP (7J)
GREEK8 (8G)
HP GERMAN (0G)
HP SPANISH (1S)
ISO LATIN1 (0N)
ISO LATIN2 (2N)
ISO LATIN5 (5N)
ISO LATIN6 (6N)
ISO2 IRV (2U)
ISO4 UK (1E)
ISO6 ASCII (0U)
ISO10 SWE/FIN (3S)
ISO11 SWEDISH (0S)
ISO14 JISASCII (0K)
ISO15 ITALIAN (0I)
ISO16 POR (4S)
ISO17 SPANISH (2S)
ISO21 GERMAN (1G)
ISO25 FRENCH (0F)
ISO57 CHINESE (2K)
ISO60 NORv1 (0D)
ISO61 NORv2 (1D)
ISO69 FRENCH (1F)
ISO84 POR (5S)
ISO85 SPANISH (6S)
LEGAL (1U)
MATH-8 (8M)
MC TEXT (12J)
MS PUBLISHING (6J)
PC-8 (10U)
PC-8 BULGARIAN (13R)
PC-8 D/N (11U)
PC-8 Greek Alternate (437G) (14G)
PC-8 L/G (12G)
PC-8 PC NOVA (27Q)
PC-8 TURKISH (9T)
PC-775 (26U)
PC-850 Multilingual (12U)
PC-851 Greece (10G)
PC-852 East Europe (17U)
PC-853 Latin3 (Turkish) (18U)
PC-855 Cyrillic (10R)
PC-857 Latin5 (Turkish) (16U)
PC-858 Multilingual Euro (13U)
PC-860 Portugal (20U)
PC-861 Iceland (21U)
PC-863 Canadian French (23U)
PC-865 Nordic (25U)
PC-866 Cyrillic (3R)
PC-869 Greece (11G)
PC-1004 (9J)
PI FONT (15U)
PS MATH (5M)
PS TEXT (10J)
ROMAN8 (8U)
ROMAN9 (4U)
ROMAN EXT. (0E)
RUSSIAN-GOST (12R)
SYMBOL (19M)

Quick reference for bar code control commands

The machine can print bar codes in the HP LaserJet emulation modes.

Print bar codes or expanded characters

Code	ESC i
Dec	27 105
Hex	1B 69

Format: ESC i n ... n \

Creates bar codes or expanded characters according to the segment of parameters ‘n ... n’. For more information about parameters, see the following Definition of Parameters. This command must end with the ‘ \ ’ code (5CH).

Definition of parameters

This bar code command can have the following parameters in the parameter segment (n ... n). As parameters are effective within the single command syntax ESC i n ... n \, they do not apply in the bar code commands. If certain parameters are not given, they take the preset settings. The last parameter must be the bar code data start (‘b’ or ‘B’) or the expanded character data start (‘l’ or ‘L’). Other parameters can be given in any sequence. Each parameter can start with a lower-case or upper-case character, for example, ‘t0’ or ‘T0’, ‘s3’ or ‘S3’ and so one.

Bar code mode

n = ‘t0’ or ‘T0’	CODE 39 (default)
n = ‘t1’ or ‘T1’	Interleaved 2 of 5
n = ‘t3’ or ‘T3’	FIM (US-Post Net)
n = ‘t4’ or ‘T4’	Post Net (US-Post Net)
n = ‘t5’ or ‘T5’	EAN 8, EAN 13, or UPC A
n = ‘t6’ or ‘T6’	UPC E
n = ‘t9’ or ‘T9’	Codabar
n = ‘t12’ or ‘T12’	Code 128 set A
n = ‘t13’ or ‘T13’	Code 128 set B
n = ‘t14’ or ‘T14’	Code 128 set C
n = ‘t130’ or ‘T130’	ISBN (EAN)
n = ‘t131’ or ‘T131’	ISBN (UPC-E)
n = ‘t132’ or ‘T132’	EAN 128 set A
n = ‘t133’ or ‘T133’	EAN 128 set B
n = ‘t134’ or ‘T134’	EAN 128 set C

This parameter selects the bar code mode as shown above. When n is ‘t5’ or ‘T5’ the bar code mode (EAN 8, EAN 13, or UPC A) varies according to the number of characters in the data.

Bar code, expanded character, line block drawing and box drawing

n = ‘s0’ or ‘S0’	3: 1 (default)
n = ‘s1’ or ‘S1’	2: 1
n = ‘s3’ or ‘S3’	2.5: 1

This parameter chooses the bar code style as above. When the EAN 8, EAN 13, UPC-A, Code 128 or EAN 128 bar code mode is chosen, this bar code style parameter is ignored.

Expanded Character

‘S’

0 = White

1 = Black

2 = Vertical stripes

3 = Horizontal stripes

4 = Cross hatch

For example ‘S’ n1 n2

n1 = Background fill pattern

n2 = Foreground fill pattern

If ‘S’ is followed by only one parameter, the parameter is a foreground fill pattern.

Line block drawing & box drawing

‘S’

1 = Black

2 = Vertical stripes

3 = Horizontal stripes

4 = Cross hatch

Bar code

n = ‘mnnn’ or ‘Mnnn’ (nnn = 0 ~ 32767)

This parameter shows the bar code width. The unit of ‘nnn’ is a percentage.

Bar code human readable line ON or OFF

n = ‘r0’ or ‘R0	Human readable line OFF
n = ‘r1’ or ‘R1	Human readable line ON

Preset:	Human readable line ON
	(1) ‘T5’ or ‘t5’
	(2) ‘T6’ or ‘t6’
	(3) ‘T130’ or ‘t130’
	(4) ‘T131’ or ‘t131’
Preset:	Human readable line OFF
	All others

This parameter shows whether the machine prints the human readable line below the bar code. Human readable characters are always printed with OCR-B font of 10 pitch and all the current character style enhancements are masked. The default setting is determined by the bar code mode selected by ‘t’ or ‘T’.

Quiet zone

n = ‘onnn’ or ‘Onnn’ (nnn = 0 ~ 32767)

Quiet zone is the space on both sides of the bar codes. Its width can be shown using the units that are set by the ‘u’ or ‘U’ parameter. (For the description of ‘u' or ‘U' parameter, see the next section.) The default setting of the quiet-zone width is 1 inch.

Bar code, expanded character unit, line block drawing and box drawing

n = ‘u0’ or ‘U0’	mm (preset)
n = ‘u1’ or ‘U1’	1/10
n = ‘u2’ or ‘U2’	1/100
n = ‘u3’ or ‘U3’	1/12
n = ‘u4’ or ‘U4’	1/120
n = ‘u5’ or ‘U5’	1/10 mm
n = ‘u6’ or ‘U6’	1/300
n = ‘u7’ or ‘U7’	1/720

This parameter shows the measurement units of X-axis offset, Y-axis offset, and bar code height.

Bar code, expanded character, line block drawing and box drawing offset in X-axis

n = ‘xnnn’ or ‘Xnnn’

This parameter shows the offset from the left margin in the ‘u’- or ‘U’-specified unit.

Bar code & expanded character offset in Y-axis

n = ‘ynnn’ or ‘Ynnn’

This parameter shows the downward offset from the current print position in the ‘u’- or ‘U’-specified unit.

Bar code, expanded character, line block drawing and box drawing height

n = ‘hnnn’, ‘Hnnn’, ‘dnnn’, or ‘Dnnn’

1 EAN13, EAN8, UPC-A, ISBN (EAN13, EAN8, UPC-A), ISBN (UPC-E): 22 mm

2 UPC-E: 18 mm

3 Others: 12 mm

Expanded characters → 2.2 mm (preset)

Line block drawing and box drawing → 1 dot

This parameter shows the height of bar codes or expanded characters as shown above. It can start with ‘h’, ‘H’, ‘d’, or ‘D’. The height of bar codes is shown in the ‘u’- or ‘U’-specified unit. The default setting of the bar code height (12 mm, 18 mm or 22 mm) is determined by the bar code mode selected by ‘t’ or ‘T’.

Expanded character width, line block drawing and box drawing

n = ‘wnnn’ or ‘Wnnn’

Expanded character → 1.2 mm

Line block drawing and box drawing → 1 dot

This parameter shows the width of expanded characters as shown above.

Expanded character rotation

n = ‘a0’ or ‘A0’	‘Upright (preset)
n = ‘a1’ or ‘A1’	‘Rotated 90 degrees
n = ‘a2’ or ‘A2’	‘Upside down, rotated 180 degrees
n = ‘a3’ or ‘A3’	‘Rotated 270 degrees

Bar code data start

n = ‘b’ or ‘B’

Data that follows ‘b’ or ‘B’ is read in as bar code data. Bar code data must end with the ‘ \ ’ code (5CH), which also ends this command. The acceptable bar code data is determined by the bar code mode selected by ‘t’ or ‘T’.

- When CODE 39 is chosen with the parameter ‘t0’ or ‘T0’

  Forty three characters ‘0’ to ‘9’, ‘A’ to ‘Z’, ‘-’, ‘ . ’, ‘ (space)’, ‘$’, ‘ / ’, ‘+’, and ‘%’ can be accepted as bar code data. Other characters will cause a data error. The number of characters for bar codes is not limited. The bar code data automatically starts and ends with an asterisk ‘ * ’ (start character and stop character). If the received data has an asterisk ‘ * ’ at the beginning or end, the asterisk is regarded as a start character or stop character.

- When Interleaved 2 of 5 is selected with the parameter ‘t1’ or ‘T1’:

  Ten numerical characters ‘0’ to ‘9’ can be accepted as bar code data. Other characters cause a data error. The number of characters for bar codes is not limited. This mode of bar codes needs even characters. If the bar code data has odd characters, ‘0’ is automatically added to the end of the bar code data.

- When FIM (US-Post Net) is selected with the parameter ‘t3’ or ‘T3’

  Characters ‘A’ to ‘D’ are valid and one digit of data can be printed. Upper-case and lower-case alphabet characters can be accepted.

- When Post Net (US-Post Net) is selected with the parameter ‘t4’ or ‘T4’

  Numbers ‘0’ to ‘9' can be data and it must end with a check digit. ‘?’ can be used instead of the check digit.

- When EAN 8, EAN 13, or UPC A is selected with the parameter ‘t5’ or ‘T5’

  Ten numbers ‘0’ to ‘9’ can be accepted as bar code data. The number of characters for bar codes is limited as follows:

  EAN 8: Total 8 digits (7 digits + 1 check digit)

  EAN 13: Total 13 digits (12 digits + 1 check digit)

  UPC A: Total 12 digits (11 digits + 1 check digit)

  A number of characters other than those stated above will cause a data error that results in the bar code data being printed as normal print data. If the check digit is not correct, the machine decides the correct check digit automatically so that the correct bar code data will be printed. When EAN13 is selected, adding ‘+’ and a two-digit or five-digit number after the data can create an add-on code.

- When UPC-E is selected with the parameter ‘t6’ or ‘T6’:

  The numbers ‘0’ to ‘9’ can be accepted as bar code data.

Eight digits [1] [2]	(standard format) The first character must be ‘0’ and the data must end with a check digit. Total eight digits = ‘0’ plus 6 digits plus 1 check digit.
Six digits [2]	The first character and the last check digit are removed from the eight digit data.

[1] ‘?’ can be used instead of a check digit.

[2] Adding ‘+’ and two-digit or five-digit number after the data creates an add-on code.

- When Codebar is chosen with the parameter ‘t9’ or ‘T9’

  Characters ‘0’ to ‘9’, ‘-’, ‘ . ’, ‘$’, ‘/’, ‘+’, ‘ : ’ can be printed. Characters ‘A’ to ‘D’ can be printed as a start-stop code, which can be upper case or lower case. If there is no start-stop code, errors will happen. A check digit cannot be added and using ‘?’ causes errors.

- When Code 128 Set A, Set B, or Set C is selected with the parameter ‘t12’ or ‘T12’, ‘t13’ or ‘T13’, or ‘t14’ or ‘T14’

  Code 128 sets A, B and C can be individually selected. Set A shows characters Hex 00 to 5F. Set B includes characters Hex 20 to 7F. Set C includes the pairs 00 to 99. Switching is allowed between the code sets by sending %A, %B, or %C. FNC 1, 2, 3, and 4 are produced with %1, %2, %3, and %4. The SHIFT code, %S, allows temporary switching (for one character only) from set A to set B and vice versa. The ‘%’ character can be encoded by sending it twice.
- When ISBN (EAN) is selected with the parameter ‘t130’ or ‘T130’

  The same rules apply as for ‘t5’ or ‘T5’.
- When ISBN (UPC-E) is selected with the parameter ‘t131’ or ‘T131’:

  The same rules apply as for ‘t6’ or ‘T6’.
- When EAN 128 set A, set B or set C is selected with the parameter ‘t132’ or ‘T132’, ‘t133’ or ‘T133’ or ‘t134’ or ‘T134’

  The same rules apply as for ‘t12’ or ‘T12’, ‘t13’ or ‘T13’, or ‘t14’ or ‘T14’.

A

Box drawing

ESC i ... E (or e)

‘E’ or ‘e’ is a terminator.

Line block drawing

ESC i ... V (or v)

‘V’ or ‘v’ is a terminator.

Expanded character data start

n = ‘l’ or ‘L’

Data that follows ‘l’ or ‘L’ is read as expanded character data (or labeling data). Expanded character data must end with the ‘ \ ’ code (5CH), which also ends this command.

Table of Code(EAN) 128 set C

Code(EAN) 128 set C describes an original command. The correspondence table is as follows.

No.	Code 128 Set C	Input command	Hex
0	00	NUL	0x00
1	01	SOH	0x01
2	02	STX	0x02
3	03	ETX	0x03
4	04	EOT	0x04
5	05	ENQ	0x05
6	06	ACK	0x06
7	07	BEL	0x07
8	08	BS	0x08
9	09	HT	0x09
10	10	LF	0x0a
11	11	VT	0x0b
12	12	NP	0x0c
13	13	CR	0x0d
14	14	SO	0x0e
15	15	SI	0x0f
16	16	DLE	0x10
17	17	DC1	0x11
18	18	DC2	0x12
19	19	DC3	0x13
20	20	DC4	0x14
21	21	NAK	0x15
22	22	SYN	0x16
23	23	ETB	0x17
24	24	CAN	0x18
25	25	EM	0x19
26	26	SUB	0x1a
27	27	ESC	0x1b
28	28	FS	0x1c
29	29	GS	0x1d
30	30	RS	0x1e
31	31	US	0x1f
32	32	SP	0x20
33	33	!	0x21
34	34	"	0x22
35	35	#	0x23
36	36	$	0x24
37	37	%	0x25
38	38	&	0x26
39	39	'	0x27
40	40	(	0x28
41	41	)	0x29
42	42	*	0x2a
43	43	+	0x2b
44	44	,	0x2c
45	45	-	0x2d
46	46	.	0x2e
47	47	/	0x2f
48	48	0	0x30
49	49	1	0x31
50	50	2	0x32
51	51	3	0x33

No.	Code 128 Set C	Input command	Hex
52	52	4	0x34
53	53	5	0x35
54	54	6	0x36
55	55	7	0x37
56	56	8	0x38
57	57	9	0x39
58	58	:	0x3a
59	59	;	0x3b
60	60	<	0x3c
61	61	=	0x3d
62	62	>	0x3e
63	63	?	0x3f
64	64	@	0x40
65	65	A	0x41
66	66	B	0x42
67	67	C	0x43
68	68	D	0x44
69	69	E	0x45
70	70	F	0x46
71	71	G	0x47
72	72	H	0x48
73	73	I	0x49
74	74	J	0x4a
75	75	K	0x4b
76	76	L	0x4c
77	77	M	0x4d
78	78	N	0x4e
79	79	O	0x4f
80	80	P	0x50
81	81	Q	0x51
82	82	R	0x52
83	83	S	0x53
84	84	T	0x54
85	85	U	0x55
86	86	V	0x56
87	87	W	0x57
88	88	X	0x58
89	89	Y	0x59
90	90	Z	0x5a
91	91	[	0x5b
92	92	\\	0x5c5c
93	93	]	0x5d
94	94	^	0x5e
95	95	_	0x5f
96	96	`	0x60
97	97	a	0x61
98	98	b	0x62
99	99	c	0x63
100	Set B	d	0x64
101	Set A	e	0x65
102	FNC 1	f	0x66

Example Program Listings

```
WIDTH "LPT1:",255
'CODE 39
LPRINT CHR$(27);"it0r1s0o0x00y00bCODE39?\";
'Interleaved 2 of 5
LPRINT CHR$(27);"it1r1s0o0x00y20b123456?\";
'FIM
LPRINT CHR$(27);"it3r1o0x00y40bA\";
'Post Net
LPRINT CHR$(27);"it4r1o0x00y60b1234567890?\";
'EAN-8
LPRINT CHR$(27);"it5r1o0x00y70b1234567?\";
'UPC-A
LPRINT CHR$(27);"it5r1o0x50y70b12345678901?\";
'EAN-13
LPRINT CHR$(27);"it5r1o0x100y70b123456789012?\";
'UPC-E
LPRINT CHR$(27);"it6r1o0x150y70b0123456?\";
'Codabar
LPRINT CHR$(27);"it9r1s0o0x00y100bA123456A\";
'Code 128 set A
LPRINT CHR$(27);"it12r1o0x00y120bCODE128A12345?\";
'Code 128 set B
LPRINT CHR$(27);"it13r1o0x00y140bCODE128B12345?\";
'Code 128 set C
LPRINT CHR$(27);"it14r1o0x00y160b";CHR$(1);CHR$(2);"?\";
'ISBN(EAN)
LPRINTCHR$(27);"it130r1o0x00y180b123456789012?+12345\";
'EAN 128 set A
LPRINT CHR$(27);"it132r1o0x00y210b1234567890?\";
LPRINT CHR$(12)
END
```

B Appendix (for Europe and Other Countries)

Brother numbers

IMPORTANT

For technical and operational help, you must call the country where you bought the machine. Calls must be made ***from within*** that country.

Register your product

Please complete the Brother Warranty Registration or, for your convenience and most efficient way to register your new product, register on-line at

http://www.brother.com/registration/

Frequently asked questions (FAQs)

The Brother Solutions Center is our one-stop resource for all your machine needs. You can download the latest drivers, software and utilities, read FAQs and troubleshooting tips to learn how to get the most from your Brother product.

http://solutions.brother.com/

You can check here for Brother driver updates.

Customer Service

Visit http://www.brother.com/ for contact information on your local Brother office.

Service center locations

For service centres in Europe, contact your local Brother Office. Address and telephone contact information for European offices can be found at http://www.brother.com/ by selecting your country.

Internet Addresses

Brother Global Web Site: http://www.brother.com/

For Frequently Asked Questions (FAQs), Product Support and Technical Questions, and Driver Updates and Utilities: http://solutions.brother.com/

C Appendix (for USA and Canada)

Brother numbers

IMPORTANT

For technical and operational help, you must call the country where you bought the machine. Calls must be made ***from within*** that country.

Register your product

By registering your product with Brother International Corporation, you will be recorded as the original owner of the product.

Your registration with Brother:

- may serve as a confirmation of the purchase date of your product should you lose your receipt;
- may support an insurance claim by you in the event of product loss covered by insurance; and,
- will help us notify you of enhancements to your product and special offers.

Please complete the Brother Warranty Registration or, for your convenience and most efficient way to register your new product, register on-line at

http://www.brother.com/registration/

FAQs (frequently asked questions)

The Brother Solutions Center is our one-stop resource for all your machine needs. You can download the latest software and utilities and read FAQs and troubleshooting tips to learn how to get the most from your Brother product.

http://solutions.brother.com/

You can check here for Brother driver updates.

Customer Service

In USA: 1-877-BROTHER (1-877-276-8437)

In Canada: 1-877-BROTHER

If you have comments or suggestions, please write us at:

In USA: Printer Customer Support
Brother International Corporation
7905 North Brother Boulevard
Bartlett, TN 38133

In Canada: Brother International Corporation (Canada), Ltd.
- Marketing Dept.
1, rue Hotel de Ville Dollard-des-Ormeaux, PQ, Canada H9B 3H6

Service center locator (USA only)

For the location of a Brother authorized service center, call 1-877-BROTHER (1-877-276-8437), or visit us on-line at http://www.brother-usa.com/service/.

Service center locations (Canada only)

For the location of a Brother authorized service center, call 1-877-BROTHER

Internet addresses

Brother Global Web Site: http://www.brother.com/

For Frequently Asked Questions (FAQs), Product Support and Technical Questions, and Driver Updates and Utilities: http://solutions.brother.com/

For Brother Accessories & Supplies:

In USA: **http://www.brothermall.com/**

In Canada: **http://www.brother.ca/**

Ordering supplies

For best quality results use only genuine Brother supplies, which are available at most Brother retailers. If you cannot find the supplies you need and you have a Visa, MasterCard, Discover, or American Express credit card, you can order supplies directly from Brother. (You can visit us online for a complete selection of the Brother accessories and supplies that are available for purchase.)

Note

In Canada only Visa and MasterCard are accepted.

In USA: 1-877-552–MALL (1-877-552-6255)
1-800-947-1445 (fax)
http://www.brothermall.com/

In Canada: 1-877-BROTHER
http://www.brother.ca/

Description	Item
Toner Cartridge <Black>	TN-310BK (Standard, Approx. 2,500 pages) [1 2] TN-315BK (High Capacity, Approx. 6,000 pages) [1 2]
Toner Cartridge <Cyan>	TN-310C (Standard, Approx. 1,500 pages) [1 2] TN-315C (High Capacity, Approx. 3,500 pages) [1 2]
Toner Cartridge <Magenta>	TN-310M (Standard, Approx. 1,500 pages) [1 2] TN-315M (High Capacity, Approx. 3,500 pages) [1 2]
Toner Cartridge <Yellow>	TN-310Y (Standard, Approx. 1,500 pages) [1 2] TN-315Y (High Capacity, Approx. 3,500 pages) [1 2]
Drum Unit	DR-310CL (Approx. 25,000 pages) [1 3 4]
Waste Toner Box	WT-300CL (Approx. 50,000 pages) [1]
Belt Unit	BU-300CL (Approx. 50,000 pages) [1]

[1] A4 or Letter size single-sided pages.

[2] Approx. cartridge yield is declared in accordance with ISO/IEC 19798.

[3] 1 page per job.

[4] Drum life is approximate and may vary by type of use.

D Index

Symbols

+ or - buttons 65

A

Accessories tab 41
Auto Registration 83

B

Back button 65
Back light 67
Bar code control 181
Belt unit 106
Brother Numbers (Europe and other countries) 189
Brother Numbers (USA/Canada) 190, 191, 192
BR-Script3 43
BR-Script3 167
Buttons 64

C

Calibration 39, 83
Call Service messages 144
Cancel button 65
Character sets 179
Cleaning 115
Color Correction 80
Computer requirements 175
Consumable items 89, 90, 91, 173
Control panel 63, 171
Control panel LCD menu 71
Corona wire 98, 121

D

Data LED 66
Deep Sleep 68, 166, 174
Default settings 82
Dimensions 174
Direct Print 23, 81, 171
Domain 179
Drum unit 101
Duplex printing 19

E

Emulation 169
Envelopes 6, 15
Error LED 66
Error messages 141

F

FAQs (Frequently Asked Questions) 190
Fonts 169

G

General Setup 73
Go button 64

I

Interface 169

J

Jam duplex 150
Jam in MP tray 147
Jam Inside 156
Jam Rear 153
Jam Tray 1 147

L

Labels 7, 12
LCD (liquid crystal display) 63, 67
LED (light-emitting diode) 66
Linux® 27
Lower tray 85

M

Machine information 71
Macintosh 27, 50, 167
Maintenance messages 89, 91
Manual duplex printing 22, 33, 58
Manual Registration 84
Media specifications 172
Memory 86, 169
Menu settings 71

N

Network connectivity 169
Network menu 76, 77
Network software 62

P

Paper 2, 176
recommended 4
size 2
type 2
Paper handling 171
Paper jams 146
Paper Tray 72
PCL printer driver 29
Plain paper 9
Print Menu 74
Print quality 31, 46, 55
Printer driver 27, 29, 43, 50, 62, 170
Processor 169

R

Register your product 189, 190
Reprint 39, 69
Reset Menu 79

S

Scanner window 117
Secure data 70
Secure Function Lock 2.0 .....25, 38
Secure Print 65
Service centers (USA/Canada) 191
Service centres (Europe and other countries) 189
Sleep mode 40, 68, 166, 174
SO-DIMM 86
Specifications 168
Status Monitor 61
Supplies (USA/Canada) 192
Symbol 179

T

TCP/IP 76, 77, 78
Thick paper 15
Toner cartridge 96, 97
Troubleshooting 140

U

Unprintable area 8
USB direct interface 23
USB flash memory drive 23, 144
Utilities 170, 189, 190

W

Waste toner box 110
Watermark 36, 37, 38
Weights 174
Windows® 29
WLAN 78, 79

D