brother®

USER'S GUIDE

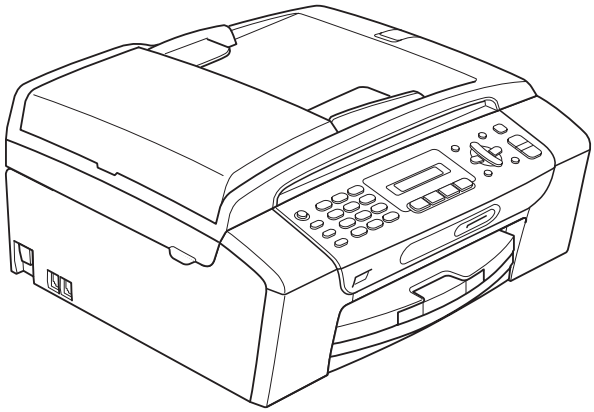

MFC-250C
MFC-290C

Version 0

ARL/ASA/NZ

If you need to call Customer Service

Please complete the following information for future reference:

Model Number: MFC-250C and MFC-290C
(Circle your model number)

Serial Number: [1] _____

Date of Purchase: _____

Place of Purchase: _____

[1] The serial number is on the back of the unit. Retain this User's Guide with your sales receipt as a permanent record of your purchase, in the event of theft, fire or warranty service.

Register your product on-line at

http://www.brother.com/registration/

By registering your product with Brother, you will be recorded as the original owner of the product. Your registration with Brother:

- may serve as confirmation of the purchase date of your product should you lose your receipt; and
- may support an insurance claim by you in the event of product loss covered by insurance.

© 2008 Brother Industries, Ltd.

Approval Information and Compilation and Publication Notice

THIS EQUIPMENT IS DESIGNED TO WORK WITH A TWO WIRE ANALOGUE PSTN LINE FITTED WITH THE APPROPRIATE CONNECTOR.

APPROVAL INFORMATION

Brother advises that this product may not function correctly in a country other than where it was originally purchased, and does not offer any warranty in the event that this product is used on public telecommunication lines in another country.

Compilation and Publication Notice

Under the supervision of Brother Industries Ltd., this manual has been compiled and published, covering the latest product descriptions and specifications.

The contents of this manual and the specifications of this product are subject to change without notice.

Brother reserves the right to make changes without notice in the specifications and materials contained herein and shall not be responsible for any damages (including consequential) caused by reliance on the materials presented, including but not limited to typographical and other errors relating to the publication.

Table of Contents

Section I General

1 General Information 2

Using the documentation 2
Symbols and conventions used in the documentation 2
Accessing the Software User's Guide 3
Viewing Documentation 3
Accessing Brother Support (For Windows®) 5
MFC-290C Control panel overview 6

2 Loading paper and documents 8

Loading paper and other print media 8
Loading envelopes and post cards 10
Removing small printouts from the machine 11
Printable area 12
Acceptable paper and other print media 13
Recommended print media 13
Handling and using print media 14
Choosing the right print media 15
Loading documents 17
Using the ADF (MFC-290C only) 17
Using the scanner glass 17
Scannable area 18

3 General setup 19

Mode Timer 19
Paper settings 19
Paper Type 19
Paper Size 19
Volume Settings 20
Ring Volume 20
Beeper Volume 20
Speaker Volume 20
Setting Daylight Savings Time 21
LCD screen 21
LCD Contrast 21
Sleep Mode 21

4 Security features 22

TX Lock 22
Setting and changing the TX Lock password 22
Turning TX Lock on/off 23

Section II Fax

5 Sending a Fax 26

Entering Fax mode 26
Faxing from the ADF (MFC-290C only) 26
Faxing from the scanner glass 26
Faxing Letter size documents from the scanner glass 27
Colour fax transmission 27
Cancelling a fax in progress 27
Broadcasting (Monochrome only) 27
Cancelling a Broadcast in progress 28
Additional sending operations 28
Sending faxes using multiple settings 28
Contrast 29
Changing fax resolution 29
Dual access (Monochrome only) 30
Real time transmission 30
Overseas Mode 31
Checking and cancelling waiting jobs 31
Sending a fax manually 31
Out of Memory message 31

6 Receiving a Fax 32

Receive modes 32
Choosing the Receive Mode 32
Using receive modes 33
Fax only 33
Fax/Tel 33
Manual 33
External TAD 33
Receive mode settings 34
Ring Delay 34
F/T Ring Time (Fax/Tel mode only) 34
Fax Detect 35
Additional receiving operations 35
Printing a reduced incoming fax 35
Out of Paper Reception 35

7 Telephone and External devices 36

Voice Operations 36
Tone or pulse (Not Available for New Zealand)....36
Fax/Tel mode 36
Telephone Service for Australia....36
Telstra® FaxStream® Duet® (Distinctive Ring)....36
Caller ID....38
How Does the Caller ID Work?....39
The Caller ID is Stored in Your Machine Memory 39
Viewing Caller ID List 39
Telephone Service for New Zealand 40
FaxAbility 40
Caller ID....41
How Does the Caller ID Work?....41
Viewing Caller ID List 41
Telephone Service for Some Countries....42
Distinctive Ring (For Singapore and Hong Kong)....42
Caller ID (For Singapore and Hong Kong) 43
Viewing Caller ID List 44
Connecting an external TAD (telephone answering device)....44
Connections....45
Recording an outgoing message (OGM) on an external TAD....45
Multi-line connections (PABX) 45
External and extension telephones....46
Connecting an external or extension telephone 46
Operation from extension telephones....46
Using a cordless external telephone 46
Using remote codes....46

8 Dialling and storing numbers 48

How to Dial 48
Manual dialling....48
Speed Dialling 48
Search 48
Fax Redial 48
Storing numbers 49
Storing a pause 49
Storing Speed Dial numbers....49
Changing Speed Dial numbers....49
Setting up groups for broadcasting....50
Combining Quick Dial numbers 50

9 Printing Reports 51

Fax reports....51
Transmission Verification Report....51
Fax Journal (activity report) 51
Reports 52
How to print a report 52

Section III Copy

10 Making copies 54

How to copy 54
Entering Copy mode 54
Making a single copy 54
Making multiple copies 54
Stop copying 54
Copy options 55
Changing copy speed and quality 56
Enlarging or reducing the image copied 56
Making N in 1 copies or a poster (Page Layout) 57
Sorting copies using the ADF (Monochrome only) (MFC-290C only) 59
Adjusting Brightness and Contrast 59
Paper options 60

Section IV Direct Photo Printing

11 Printing photos from a memory card or USB Flash memory drive 62

PhotoCapture Center™ Operations 62
Printing from a memory card or USB Flash memory drive without a PC 62
Scanning to a memory card or USB Flash memory drive without a PC 62
Using PhotoCapture Center™ from your computer 62
Using a memory card or USB Flash memory drive 62
Memory cards (MFC-290C only) or a USB Flash memory drive folder structure 63
Getting started 64
How to print from a memory card or USB Flash memory drive 65
Print Index (Thumbnails) 65
Printing Photos 66
DPOF printing 67
PhotoCapture Center™ print settings 68
Print speed and quality 68
Paper Options 68
Adjusting Brightness and Contrast 68
Cropping 69
Borderless printing 69
Date Print 69
Scan to a memory card or USB Flash memory drive 70
Changing the image quality 70
Changing the monochrome file format 71
Changing the colour file format 71
Understanding the Error Messages 71

12 Printing photos from a camera 72

Printing photos directly from a PictBridge camera 72
PictBridge requirements 72
Setting your digital camera 72
Printing Images 73
DPOF printing 73
Printing photos directly from a digital camera (without PictBridge) 74
Printing Images 74
Understanding the Error Messages 75

Section V Software

13 Software features 78

Section VI Appendixes

A Safety and Legal 80

Choosing a location 80
To use the machine safely 81
IMPORTANT-For Your Safety 85
Important Information for Australia 86
Important safety instructions 86
Important Information for New Zealand 87
Important Safety Instructions 87
Important Information for Some Countries 90
Important Safety Instructions 90
Radio interference 92
International ENERGY STAR® Compliance Statement 92
Legal limitations for copying 93
Trademarks 94

B Troubleshooting and Routine Maintenance 95

Troubleshooting 95
If you are having difficulty with your machine 95
Dial Tone detection 100
Telephone line interference 100
Error and maintenance messages 101
Transferring your faxes or Fax Journal report 105
Document jam (MFC-290C only) 105
Printer jam or paper jam 106
Routine maintenance 109
Replacing the ink cartridges 109
Cleaning the outside of the machine 112
Cleaning the scanner glass 113
Cleaning the machine printer platen 113
Cleaning the paper pick-up roller 114
Cleaning the print head 114
Checking the print quality 115
Checking the print alignment 116
Checking the ink volume 116
Machine Information 116
Checking the serial number 116
Packing and shipping the machine 117

C Menu and Features 119

On-screen programming 119
Menu table 119
Memory storage 119
Menu keys 119
Menu Table 121
Entering Text 127

D Specifications 128

General 128
Print media 130
Fax 131
Copy 133
PhotoCapture Center™ 134
PictBridge 135
Scanner 136
Printer 137
Interfaces 138
Computer requirements 139
Consumable items 140

E Glossary 141

F Index 145

Section I

General

General Information 2
Loading paper and documents 8
General setup 19
Security features 22

1 General Information

Using the documentation

Thank you for buying a Brother machine! Reading the documentation will help you make the most of your machine.

Symbols and conventions used in the documentation

The following symbols and conventions are used throughout the documentation.

Bold	Bold typeface identifies specific buttons on the machine's control panel or on the computer screen.
Italics	Italicized typeface emphasizes an important point or refers you to a related topic.
`Courier New`	Text in Courier New font identifies messages on the LCD of the machine.

Warnings tell you what to do to prevent possible personal injury.

Cautions specify procedures you must follow or avoid to prevent possible minor or severe injuries.

Electrical Hazard icons alert you to possible electrical shock.

Notes tell you how you should respond to a situation that may arise or give tips about how the operation works with other features.

Improper Setup icons alert you to devices and operations that are not compatible with the machine.

Accessing the Software User's Guide

This User's Guide does not contain all the information about the machine such as how to use Printer, Scanner and PC Fax. When you are ready to learn detailed information about these operations, read the **Software User's Guide** that is on the CD-ROM.

Viewing Documentation

Viewing Documentation (For Windows®)

To view the documentation, from the **Start** menu, point to **Brother**, **MFC-XXXX** (where XXXX is your model name) from the programs group, and then choose **User's Guides in HTML format**.

If you have not installed the software, you can find the documentation by following the instructions below:

1. Turn on your PC. Insert the Brother CD-ROM into your CD-ROM drive.
2. If the model name screen appears, click your model name.
3. If the language screen appears, click your language. The CD-ROM Main Menu will appear.

Note

If this window does not appear, use Windows® Explorer to run the start.exe program from the root directory of the Brother CD-ROM.

4. Click **Documentation**.
5. Click the documentation you want to read.
   - **HTML documents**: **Software User's Guide** in HTML format.

     This format is recommended for viewing on your computer.
   - **PDF documents**: **User's Guide** for stand-alone operations and **Software User's Guide** in PDF format.

     This format is recommended for printing the manuals. Click to go to the Brother Solution Center, where you can view or download the PDF documents. (Internet access and PDF Reader software are required.)

How to find Scanning instructions

There are several ways you can scan documents. You can find the instructions as follows:

Software User's Guide

- *Scanning*
  (For Windows® 2000 Professional/ Windows® XP and Windows Vista®)
- *ControlCenter3*
  (For Windows® 2000 Professional/ Windows® XP and Windows Vista®)

ScanSoft™ PaperPort™ 11SE with OCR How-to-Guides

- The complete ScanSoft™ PaperPort™ 11SE with OCR How-to-Guides can be viewed from the Help selection in the ScanSoft™ PaperPort™ 11SE application.

Presto! PageManager User's Guide

(Hong Kong users only)

- Instructions for scanning directly from Presto! PageManager. The complete Presto! PageManager User's Guide can be viewed from the Help selection in the Presto! PageManager application.

Viewing Documentation (For Macintosh®)

1. Turn on your Macintosh®. Insert the Brother CD-ROM into your CD-ROM drive. The following window will appear.

2. Double-click the **Documentation** icon.
3. Double-click your language folder.
4. Double-click **top.html** to view the **Software User's Guide** in HTML format.

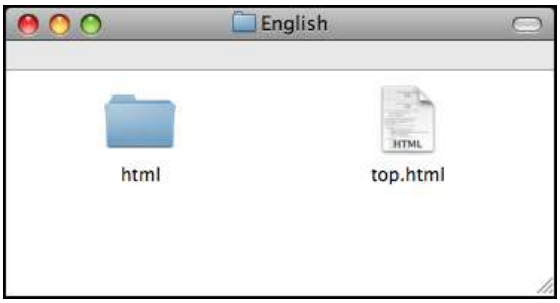

5. Click the documentation you want to read.
   - **Software User's Guide**

How to find Scanning instructions

There are several ways you can scan documents. You can find the instructions as follows:

Software User's Guide

- *Scanning*
  (For Mac OS® X 10.2.4 or greater)
- *ControlCenter2*
  (For Mac OS® X 10.2.4 or greater)

Presto! PageManager User's Guide

- Instructions for scanning directly from Presto! PageManager. The complete Presto! PageManager User's Guide can be viewed from the Help selection in the Presto! PageManager application.

Accessing Brother Support (For Windows®)

You can find all the contacts you will need, such as Web support (Brother Solutions Center).

- Click **Brother Support** on the main menu. The following screen will appear:

- To access our web site (http://www.brother.com), click **Brother Home Page**.
- For the latest news and product support information (http://solutions.brother.com), click **Brother Solutions Center**.
- To visit our web site for original Brother supplies (http://www.brother.com/original/), click **Supplies Information**.
- To access the Brother CreativeCenter (http://www.brother.com/creativecenter/) for FREE photo projects and printable downloads, click **Brother CreativeCenter**.
- To return to the main page, click **Back** or if you have finished, click **Exit**.

MFC-290C Control panel overview

The **MFC-250C** and **MFC-290C** have the same control panel keys.

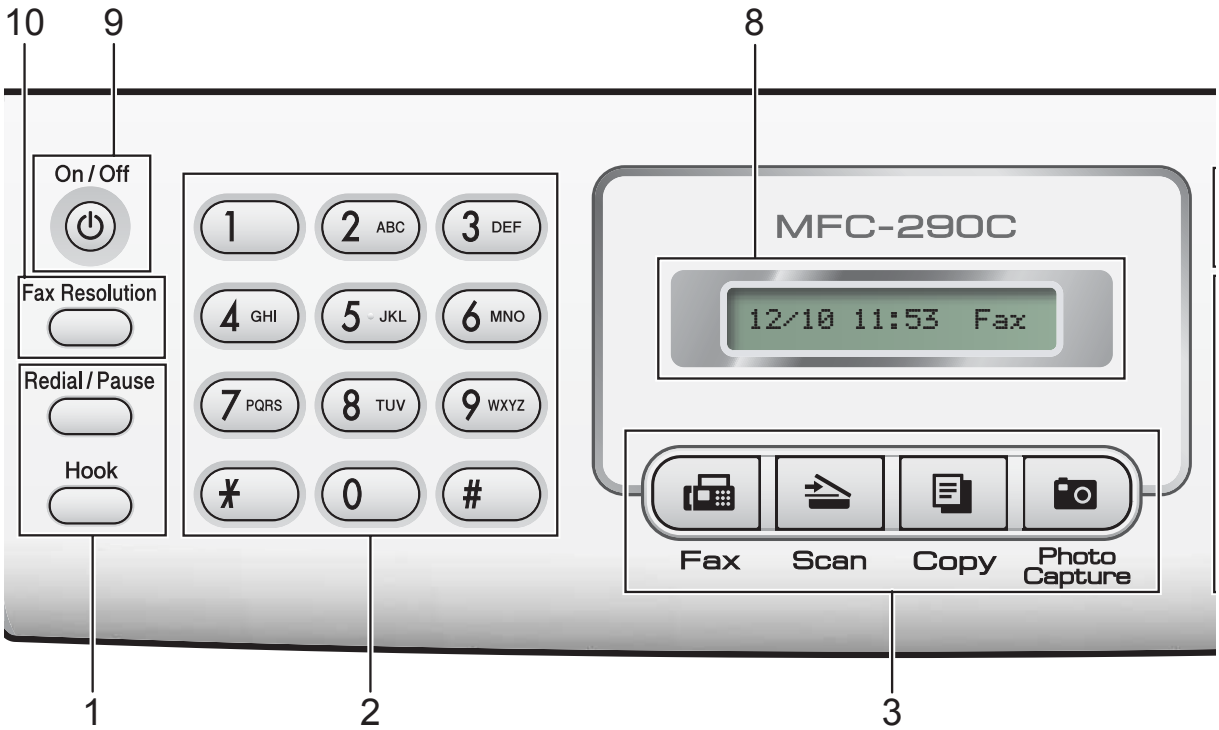

Note

Most of the illustrations in this User's Guide show the MFC-290C.

1 Fax and telephone keys:

- **Redial/Pause**
  Redials one of the last number called. It also inserts a pause when programming quick dial numbers.
- **Hook**
  Press before dialing if you want to make sure a fax machine will answer, and then press **Mono Start** or **Colour Start**.
  Also, press this key after picking up the handset of an external telephone during the F/T pseudo/double-ring.

2 Dial Pad

Use these keys to dial telephone and fax numbers and as a keyboard for entering information into the machine.
The # key lets you temporarily switch the dialing mode during a telephone call from Pulse to Tone. (Not Available in New Zealand)

3 Mode keys:

- **Fax**
  Lets you access Fax mode.
- **Scan**
  Lets you access Scan mode.
- **Copy**
  Lets you access Copy mode.
- **Photo Capture**
  Lets you access PhotoCapture Center™ mode.

4 Menu keys:

- **Menu**
  Lets you access the main menu to program the machine.
- **Speed Dial key**
  Lets you store, look up, and dial numbers in the memory.

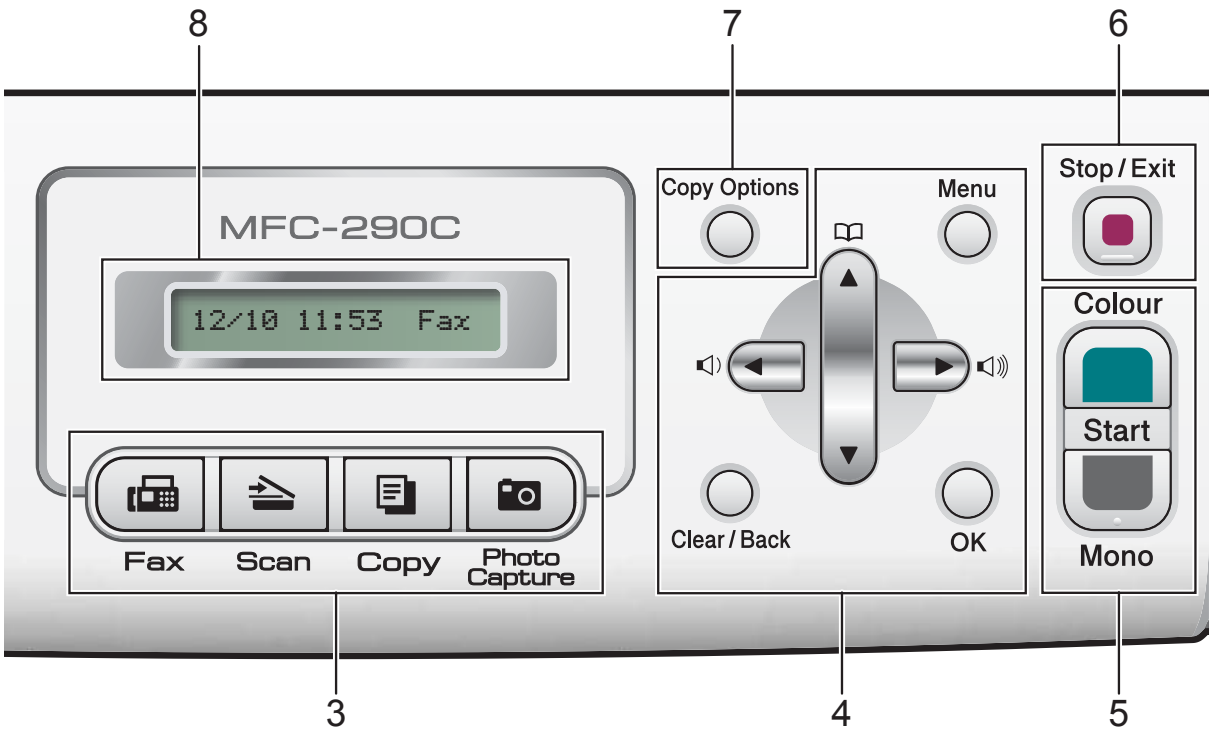

■ **Volume keys**

◀ ▶

When the machine is idle, you can press these keys to adjust the ring volume.

■ ◀

Press to scroll backward to a menu selection.

■ ▲ or ▼

Press to scroll through the menus and options.

■ **Clear/Back**

Press to delete characters or to go back to the previous menu level.

■ **OK**

Lets you choose a setting.

5 Start keys:

■ **Colour Start**

Lets you start sending faxes or making copies in full colour. Also lets you start a scanning operation (in colour or mono, depending on the scanning setting in the ControlCenter software).

■ **Mono Start**

Lets you start sending faxes or making copies in monochrome. Also lets you start a scanning operation (in colour or mono, depending on the scanning setting in the ControlCenter software).

6 Stop/Exit

Stops an operation or exits from a menu.

7 Copy Options

Lets you temporarily change the copy settings when in copy mode.

8 LCD (liquid crystal display)

Displays messages on the screen to help you set up and use your machine.

9 On/Off

You can turn the machine on and off.
If you turn the machine off, it will still periodically clean the print head to maintain print quality. To maintain print quality, prolong print head life, and provide the best ink cartridge economy, you should keep your machine connected to the power at all times.

10 Fax Resolution

Lets you temporarily change the resolution when sending a fax.

2 Loading paper and documents

Loading paper and other print media

1. If the paper support flap is open, close it, and then close the paper support. Pull the paper tray completely out of the machine.

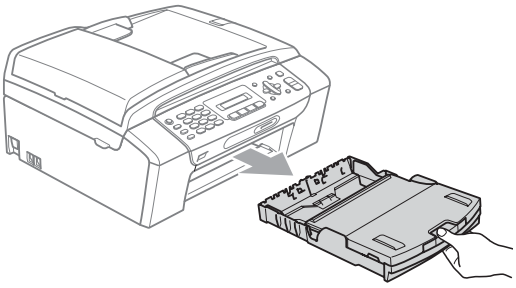

2. Lift the paper tray cover (1).

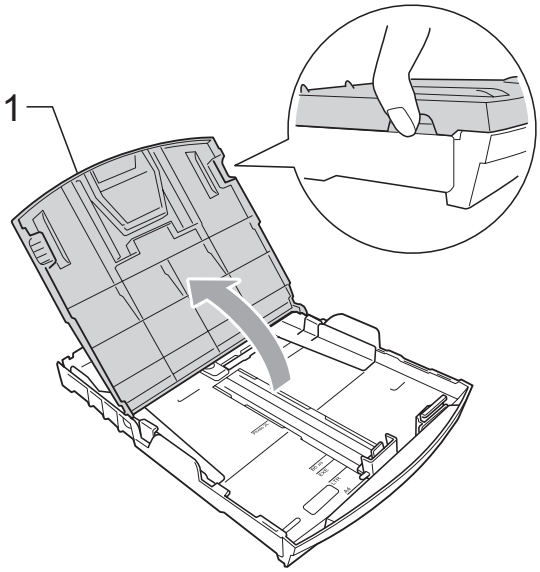

3. With both hands, gently press and slide the paper side guides (1) and then the paper length guide (2) to fit the paper size. Make sure that the triangular marks (3) on the paper side guides (1) and paper length guide (2) line up with the mark for the paper size you are using.

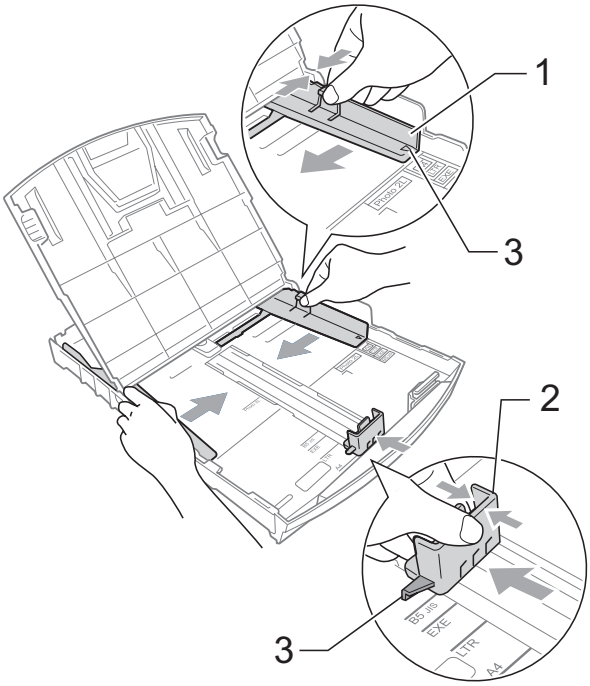

Note

When you use Legal size paper, press and hold the universal guide release button (1) as you slide out the front of the paper tray.

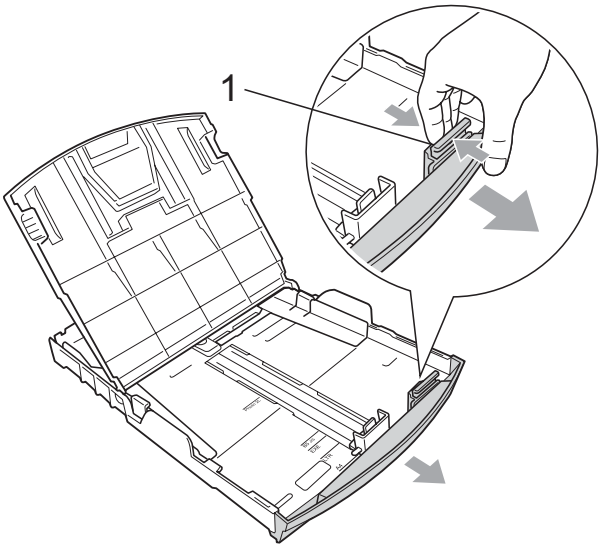

4 Fan the stack of paper well to avoid paper jams and misfeeds.

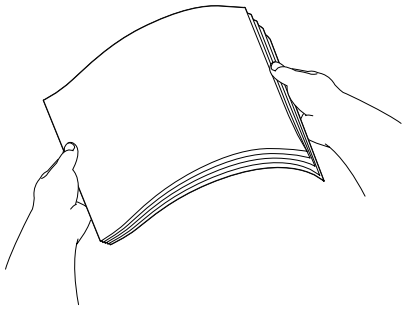

Note

Always make sure the paper is not curled.

5 Gently put the paper into the paper tray print side down and top edge in first. Check that the paper is flat in the tray.

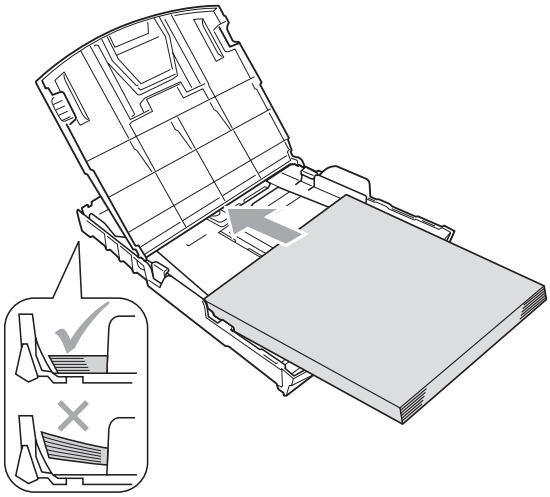

6 Gently adjust the paper side guides (1) to the paper with both hands. Make sure the paper side guides touch the sides of the paper.

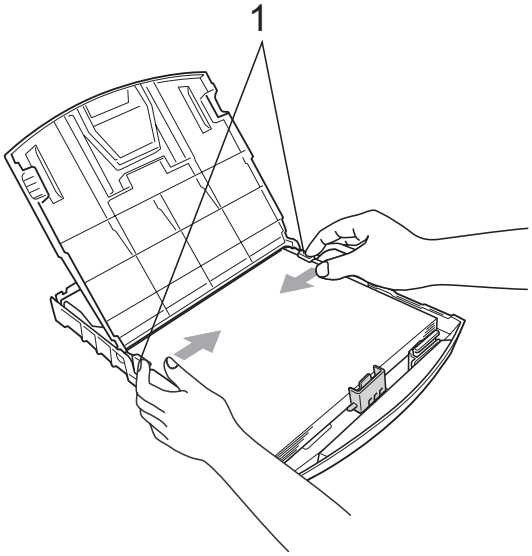

Note

Be careful that you do not push the paper in too far; it may lift at the back of the tray and cause feed problems.

7 Close the paper tray cover.

8 *Slowly* push the paper tray completely into the machine.

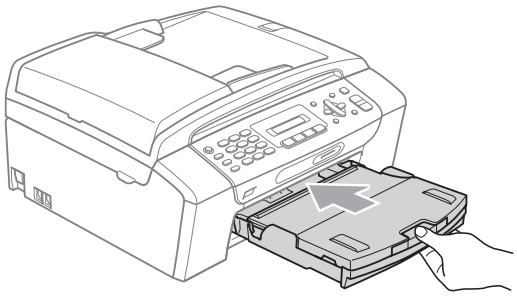

9 While holding the paper tray in place, pull out the paper support (1) until it clicks and then unfold the paper support flap (2).

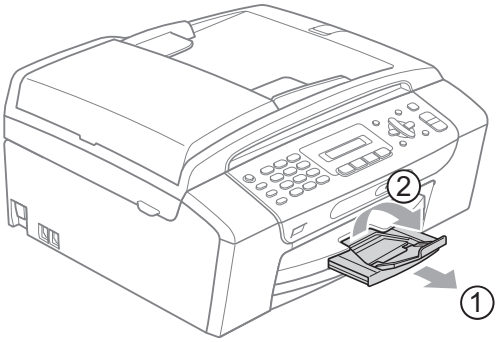

Note

Do not use the paper support flap for Legal paper.

Loading envelopes and post cards

About envelopes

- Use envelopes that weigh between 75 to 95 gsm.
- Some envelopes need margin settings to be set in the application. Make sure you do a test print first before printing many envelopes.

CAUTION

DO NOT use any of the following types of envelopes, as they will cause paper feed problems:

- That are of a baggy construction.
- That are embossed (have raised writing on them).
- That have clasps or staples.
- That are pre-printed on the inside.

Glue	Double flap
	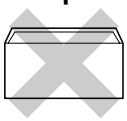

Occasionally you may experience paper feed problems caused by the thickness, size and flap shape of the envelopes you are using.

How to load envelopes and postcards

1 Before loading, press the corners and sides of envelopes or post cards to make them as flat as possible.

Note

If envelopes or post cards are ‘double-feeding’, put one envelope or post card in the paper tray at a time.

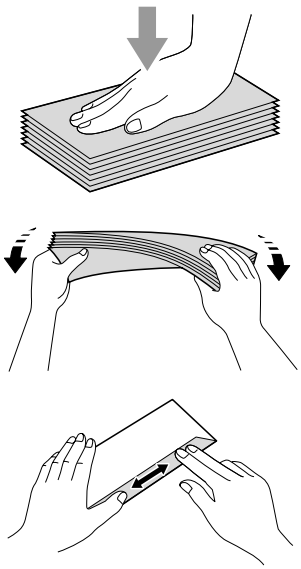

2 Put envelopes or post cards into the paper tray with the address side down and the leading edge in first as shown in the illustration. With both hands, gently press and slide the paper side guides (1) and paper length guide (2) to fit the size of the envelopes or post cards.

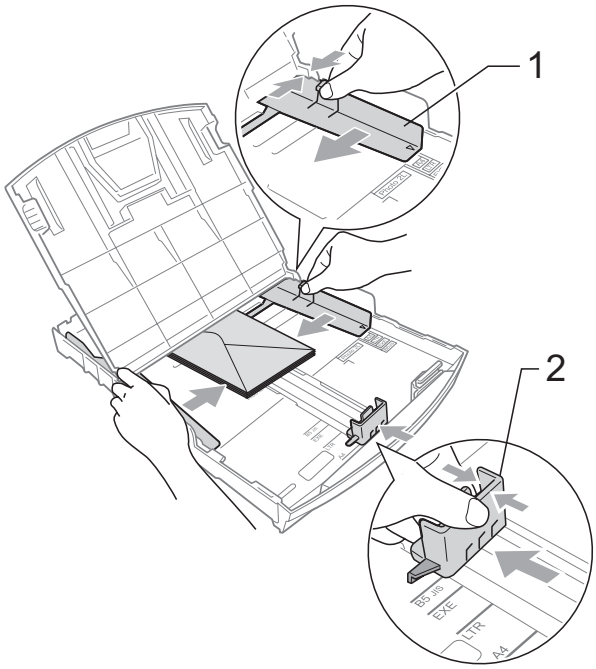

If you have problems when printing on envelopes, try the following suggestions:

1 Make sure the flap is either to the side of the envelope or to the back edge of the envelope when printing.

2 Adjust the size and margin in your application.

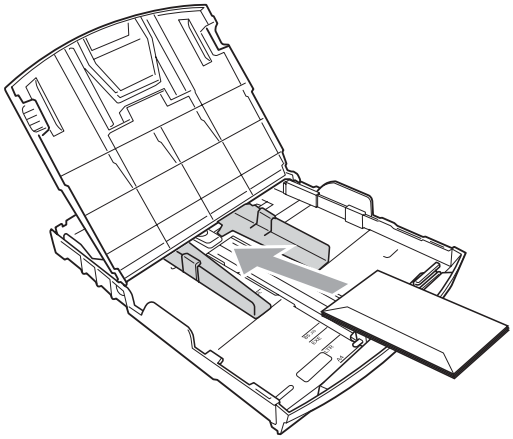

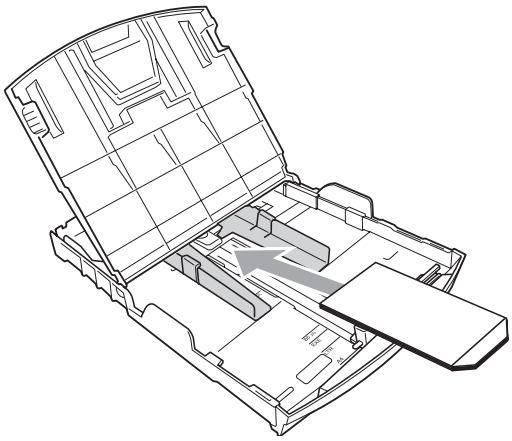

Removing small printouts from the machine

When the machine ejects small paper onto the paper tray you may not be able to reach it. Make sure printing has finished, and then pull the tray completely out of the machine.

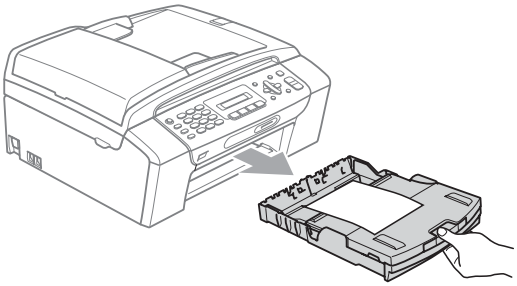

Printable area

The printable area depends on the settings in the application you are using. The figures below show the unprintable areas on cut sheet paper and envelopes. The machine can print in the shaded areas of cut sheet paper when the Borderless print feature is available and turned on. (See *Printing* for Windows® or *Printing and Faxing* for Macintosh® in the Software User's Guide on the CD-ROM.)

Cut Sheet Paper

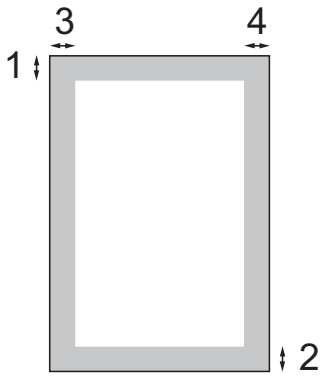

Envelopes

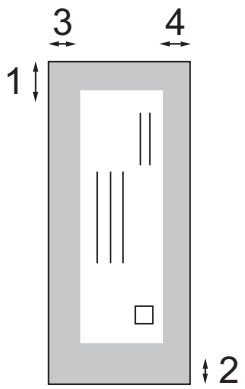

	Top (1)	Bottom (2)	Left (3)	Right (4)
Cut Sheet	3 mm	3 mm	3 mm	3 mm
Envelopes	12 mm	24 mm	3 mm	3 mm

Note

The Borderless feature is not available for envelopes.

Acceptable paper and other print media

The print quality can be affected by the type of paper you are using in the machine.

To get the best print quality for the settings you have chosen, always set the Paper Type to match the type of paper you load.

You can use plain paper, inkjet paper (coated paper), glossy paper, transparencies and envelopes.

We recommend testing various paper types before buying large quantities.

For best results, use Brother paper.

- When you print on inkjet paper (coated paper), transparencies and photo paper, be sure to choose the correct print media in the '**Basic**' tab of the printer driver or in the Paper Type setting of the menu (See *Paper Type* on page 19).
- When you print on Brother Photo paper, load one extra sheet of the same photo paper in the paper tray. An extra sheet has been included in the paper package for this purpose.
- When you use transparencies or photo paper, remove each sheet at once to prevent smudging or paper jams.
- Avoid touching the printed surface of the paper immediately after printing; the surface may not be completely dry and may stain your fingers.

Recommended print media

To get the best print quality, we suggest using Brother paper. (See table below.)

If Brother paper is not available in your country, we recommend testing various papers before purchasing large quantities.

We recommend using '3M Transparency Film' when you print on transparencies.

Brother paper

Paper Type	Item
A4 Plain	BP60PA
A4 Glossy Photo	BP71GA4
A4 Inkjet (Matte)	BP60MA
10 x 15 cm Glossy Photo	BP71GP

Handling and using print media

- Store paper in its original packaging, and keep it sealed. Keep the paper flat and away from moisture, direct sunlight and heat.
- Avoid touching the shiny (coated) side of photo paper. Load photo paper with the shiny side facing down.
- Avoid touching either side of transparencies because they absorb water and perspiration easily, and this may cause decreased output quality. Transparencies designed for laser printers/copiers may stain your next document. Use only transparencies recommended for inkjet printing.
- You can only print on both sides of the paper with PC printing. (See *Printing* for Windows® in the Software User's Guide on the CD-ROM).

Improper Setup

DO NOT use the following kinds of paper:

- Damaged, curled, wrinkled, or irregularly shaped paper

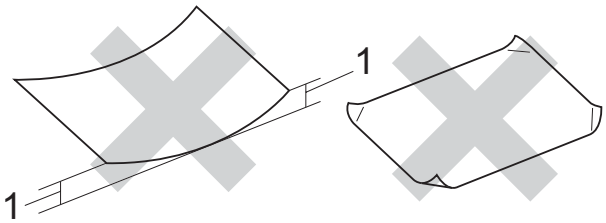

1 2 mm or greater

- Extremely shiny and highly textured paper
- Paper that cannot be arranged uniformly when stacked
- Paper made with a short grain

Paper capacity of the paper tray

Up to 50 sheets of 80 gsm or 20 lb A4 paper.

- Transparencies and photo paper must be picked up from the paper tray one page at a time to avoid smudging.

Choosing the right print media

Paper type and size for each operation

Paper Type	Paper Size		Usage			
			Fax	Copy	Photo Capture	Printer
Cut Sheet	Letter	215.9 × 279.4 mm (8 1/2 × 11 in.)	Yes	Yes	Yes	Yes
	A4	210 × 297 mm (8.3 × 11.7 in.)	Yes	Yes	Yes	Yes
	Legal	215.9 × 355.6 mm (8 1/2 × 14 in.)	Yes	Yes	–	Yes
	Executive	184 × 267 mm (7 1/4 × 10 1/2 in.)	–	–	–	Yes
	JIS B5	182 × 257 mm (7.2 × 10.1 in.)	–	–	–	Yes
	A5	148 × 210 mm (5.8 × 8.3 in.)	–	Yes	–	Yes
	A6	105 × 148 mm (4.1 × 5.8 in.)	–	–	–	Yes
Cards	Photo	10 × 15 cm (4 × 6 in.)	–	Yes	Yes	Yes
	Photo 2L	13 × 18 cm (5 × 7 in.)	–	–	Yes	Yes
	Index Card	127 × 203 mm (5 × 8 in.)	–	–	–	Yes
	PostCard 1	100 × 148 mm (3.9 × 5.8 in.)	–	–	–	Yes
	PostCard 2 (Double)	148 × 200 mm (5.8 × 7.9 in.)	–	–	–	Yes
Envelopes	C5 Envelope	162 × 229 mm (6.4 × 9 in.)	–	–	–	Yes
	DL Envelope	110 × 220 mm (4.3 × 8.7 in.)	–	–	–	Yes
	COM-10	105 × 241 mm (4 1/8 × 9 1/2 in.)	–	–	–	Yes
	Monarch	98 × 191 mm (3 7/8 × 7 1/2 in.)	–	–	–	Yes
	JE4 Envelope	105 × 235 mm (4.1 × 9.3 in.)	–	–	–	Yes
Transparencies	Letter	216 × 279 mm (8 1/2 × 11 in.)	–	Yes	–	Yes
	A4	210 × 297 mm (8.3 × 11.7 in.)	–	Yes	–	Yes
	Legal	215.9 × 355.6 mm (8 1/2 × 14 in.)	–	Yes	–	Yes
	A5	148 × 210 mm (5.8 × 8.3 in.)	–	Yes	–	Yes

Paper weight, thickness and capacity

Paper Type		Weight	Thickness	No. of sheets
Cut Sheet	Plain Paper	64 to 120 gsm	0.08 to 0.15 mm	100 [1]
	Inkjet Paper	64 to 200 gsm	0.08 to 0.25 mm	20
	Glossy Paper	Up to 220 gsm	Up to 0.25 mm	20 [2]
Cards	Photo Card	Up to 220 gsm	Up to 0.25 mm	20 [2]
	Index Card	Up to 120 gsm	Up to 0.15 mm	30
	PostCard	Up to 200 gsm	Up to 0.25 mm	30
Envelopes		75 to 95 gsm	Up to 0.52 mm	10
Transparencies		–	–	10

[1] Up to 100 sheets of 80 gsm paper.

[2] BP71 (260 gsm) paper is especially designed for Brother inkjet machines.

Loading documents

You can send a fax, make copies, and scan from the ADF (automatic document feeder) and from the scanner glass.

Using the ADF (MFC-290C only)

The ADF can hold up to 15 pages and feeds each sheet individually. Use standard 80 gsm paper and always fan the pages before putting them in the ADF.

Recommended environment

Temperature:	20 to 30° C
Humidity:	50% to 70%
Paper:	80 gsm

Document Sizes Supported

Length:	148 to 355.6 mm
Width:	148 to 215.9 mm
Weight:	64 to 90 gsm

How to load documents

CAUTION

DO NOT pull on the document while it is feeding.

DO NOT use paper that is curled, wrinkled, folded, ripped, stapled, paper clipped, pasted or taped.

DO NOT use cardboard, newspaper or fabric with the ADF. Instead use the scanner glass.

- Make sure documents with ink or liquid correction fluid are completely dry.

1. Unfold the ADF Document Output Support Flap (1).
2. Fan the pages well.
3. Make sure you place the documents **face down, top edge first** in the ADF until you feel them touch the feed roller.
4. Adjust the paper guides (2) to fit the width of your documents.

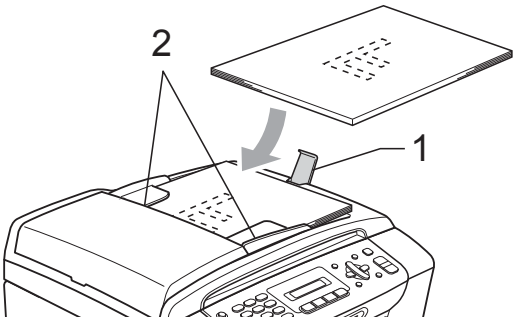

CAUTION

DO NOT leave thick documents on the scanner glass. If you do this, the ADF may jam.

Using the scanner glass

You can use the scanner glass to fax, copy or scan pages of a book one page at a time.

Document Sizes Supported

Length:	Up to 297 mm
Width:	Up to 215.9 mm
Weight:	Up to 2 kg

How to load documents

Note

To use the scanner glass, the ADF must be empty.

1. Lift the document cover.
2. Using the document guidelines on the left and top, place the document face down in the upper left corner of the scanner glass.

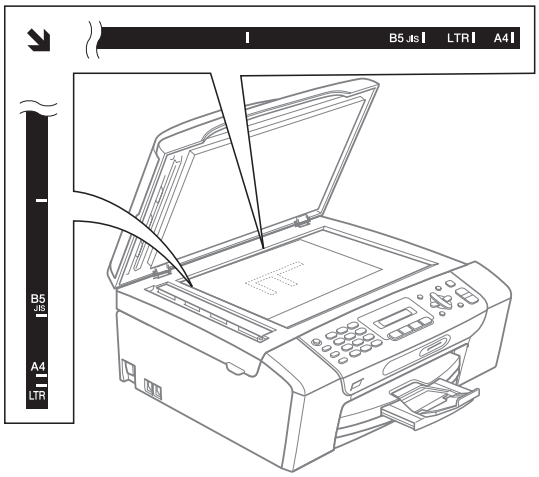

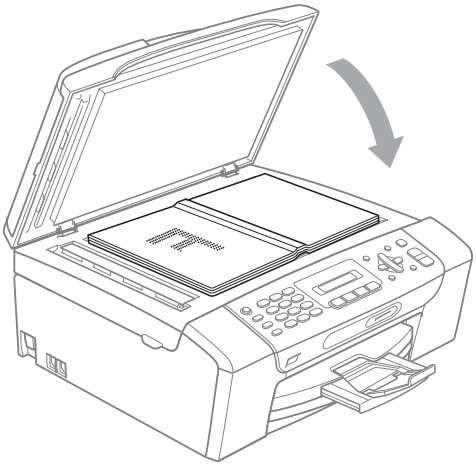

3. Close the document cover.

CAUTION

If you are scanning a book or thick document, DO NOT slam the cover or press on it.

Scannable area

The scannable area depends on the settings in the application you are using. The figures below show the areas you cannot scan on Letter and A4 paper.

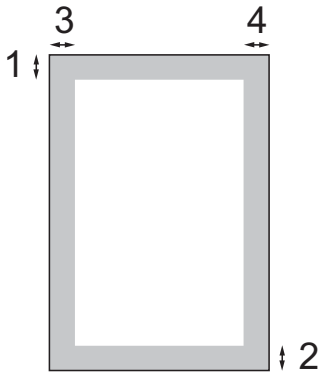

Usage	Document Size	Top (1) Bottom (2)	Left (3) Right (4)
Fax	Letter	3 mm	4 mm
	A4	3 mm	1 mm
Copy	Letter	3 mm	3 mm
	A4	3 mm	3 mm
Scan	Letter	3 mm	3 mm
	A4	3 mm	3 mm

3 General setup

Mode Timer

The machine has four temporary mode keys on the control panel: **Fax**, **Scan**, **Copy** and **Photo Capture**. You can change the amount of time the machine takes after the last Scan, Copy or PhotoCapture operation before it returns to Fax mode. If you choose `Off`, the machine stays in the mode you used last by default.

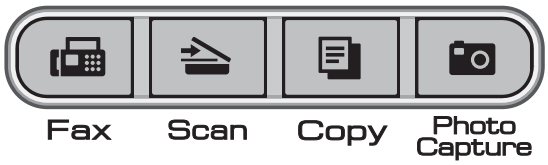

1. Press **Menu**, **1**, **1**.
2. Press ▲ or ▼ to choose `0 Sec`, `30 Secs`, `1 Min`, `2 Mins`, `5 Mins` or `Off`.
   Press **OK**.
3. Press **Stop/Exit**.

Paper settings

Paper Type

To get the best print quality, set the machine for the type of paper you are using.

1. Press **Menu**, **1**, **2**.
2. Press ▲ or ▼ to choose `Plain Paper`, `Inkjet Paper`, `Brother BP71`, `Other Glossy` or `Transparency`.
   Press **OK**.
3. Press **Stop/Exit**.

Note

The machine ejects paper with printed surfaces face up onto the paper tray in front of the machine. When you use transparencies or glossy paper, remove each sheet at once to prevent smudging or paper jams.

Paper Size

You can use five sizes of paper for printing copies: Letter, Legal, A4, A5, and 10 × 15 cm and three sizes for printing faxes: Letter, Legal and A4. When you change the size of paper you load in the machine, you will need to change the paper size setting at the same time so your machine can fit an incoming fax on the page.

1. Press **Menu**, **1**, **3**.
2. Press ▲ or ▼ to choose `Letter`, `Legal`, `A4`, `A5` or `10x15cm`.
   Press **OK**.
3. Press **Stop/Exit**.

Volume Settings

Ring Volume

You can choose a range of ring volume levels, from High to Off.

While the machine is idle, press ◀ or ▶ to adjust the volume level. The LCD shows the current setting, and each key press will change the volume to the next level. The machine will keep the new setting until you change it.

You can also change the volume through the menu, by following the instructions below:

Setting the Ring Volume from the menu

1. Press **Menu**, **1**, **4**, **1**.
2. Press ▲ or ▼ to choose Low, Med, High or Off.
   Press **OK**.
3. Press **Stop/Exit**.

Beeper Volume

When the beeper is on, the machine will beep when you press a key, make a mistake or after you send or receive a fax.

You can choose a range of volume levels, from High to Off.

1. Press **Menu**, **1**, **4**, **2**.
2. Press ▲ or ▼ to choose Low, Med, High or Off.
   Press **OK**.
3. Press **Stop/Exit**.

Speaker Volume

You can choose a range of speaker volume levels, from High to Off.

1. Press **Menu**, **1**, **4**, **3**.
2. Press ▲ or ▼ to choose Low, Med, High or Off.
   Press **OK**.
3. Press **Stop/Exit**.

Setting Daylight Savings Time

You can set the machine to change for daylight savings time. It will reset itself forward one hour in the Spring and backward one hour in the Autumn. Make sure you have set the correct date and time in the `Date&Time` setting.

1. Press **Menu**, **1**, **5**.
2. Press ▲ or ▼ to choose `On` or `Off`.
   Press **OK**.
3. Press **Stop/Exit**.

LCD screen

LCD Contrast

You can adjust the LCD contrast for a sharper and more vivid display. If you are having difficulty reading the LCD, try changing the contrast setting.

1. Press **Menu**, **1**, **6**.
2. Press ▲ or ▼ to choose `Light` or `Dark`.
   Press **OK**.
3. Press **Stop/Exit**.

Sleep Mode

You can choose how long the machine must be idle (from 1 to 60 minutes) before it goes into sleep mode. The timer will restart if any operation is carried out on the machine.

1. Press **Menu**, **1**, **7**.
2. Press ▲ or ▼ to choose `1 Min`, `2 Mins`, `3 Mins`, `5 Mins`, `10 Mins`, `30 Mins` or `60 Mins` which is the length of time the machine is idle before entering sleep mode.
   Press **OK**.
3. Press **Stop/Exit**.

4 Security features

TX Lock

TX Lock lets you prevent unauthorized access to the machine.

While TX Lock is On, the following operations are available:

- Receiving faxes

While TX Lock is On, the following operations are NOT available:

- Sending faxes
- Copying
- PC printing
- Scanning
- PhotoCapture
- Operation from the Control panel

Note

If you forget the TX Lock password, please call your Brother dealer for service.

Setting and changing the TX Lock password

Note

If you have already set the password, you will not need to set it again.

Setting up the password

1. Press **Menu**, **2**, **0**, **1**.
2. Enter a 4-digit number for the password. Press **OK**.
3. When the LCD shows `Verify:`, re-enter the password. Press **OK**.
4. Press **Stop/Exit**.

Changing the password

1. Press **Menu**, **2**, **0**, **1**.
2. Press ▲ or ▼ to choose `Set Password`. Press **OK**.
3. Enter a 4-digit number for the current password. Press **OK**.
4. Enter a 4-digit number for a new password. Press **OK**.
5. When the LCD shows `Verify:`, re-enter the password. Press **OK**.
6. Press **Stop/Exit**.

Turning TX Lock on/off

Turning TX Lock on

1. Press **Menu**, **2**, **0**, **1**.
2. Press ▲ or ▼ to choose `Set TX Lock`. Press **OK**.
3. Enter the registered 4-digit password. Press **OK**.
   The machine goes offline and the LCD shows `TX Lock Mode`.

Turning TX Lock off

1. Press **Menu**.
2. Enter the registered 4-digit password. Press **OK**.
   TX lock is automatically turned off.

Note

If you enter the wrong password, the LCD shows `Wrong Password` and stays offline. The machine will stay in TX Lock mode until the registered password is entered.

Section II

Fax

Sending a Fax	26
Receiving a Fax	32
Telephone and External devices	36
Dialling and storing numbers	48
Printing Reports	51

5 Sending a Fax

Entering Fax mode

To enter fax mode, press (**Fax**), and the key will glow green.

Faxing from the ADF (MFC-290C only)

1. Make sure you are in Fax mode .
2. Place the document face down in the ADF.
   (See *Using the ADF (MFC-290C only)* on page 17.)
3. Enter the fax number using the dial pad, Speed Dial or Search.
4. Press **Mono Start** or **Colour Start**.
   The machine starts scanning the document.

Note

- To cancel, press **Stop/Exit**.
- If you send a mono fax while the memory is full it will be sent in real time.

Faxing from the scanner glass

You can use the scanner glass to fax pages of a book one at a time. The documents can be up to Letter or A4 size.

You cannot send colour faxes with multiple pages.

Note

(MFC-290C only)
Since you can only scan one page at a time, it is easier to use the ADF if you are sending a multiple page document.

1. Make sure you are in Fax mode .
2. Load your document face down on the scanner glass.
3. Enter the fax number using the dial pad, Speed Dial or Search.
4. Press **Mono Start** or **Colour Start**.
   - If you press **Mono Start**, the machine starts scanning the first page. Go to step ❺.
   - If you press **Colour Start**, the machine starts sending the document.
5. Do one of the following:
   - To send a single page, press **2** to choose `No(Dial)` (or press **Mono Start** again).

     The machine starts sending the document.
   - To send more than one page, press **1** to choose `Yes` and go to step ❻.
6. Place the next page on the scanner glass.
   Press **OK**.
   The machine starts scanning the page.
   (Repeat steps ❺ and ❻ for each additional page.)

Faxing Letter size documents from the scanner glass

When documents are Letter size, you need to set scan size to Letter. If you do not, the side portion of the faxes will be missing.

1. Make sure you are in Fax mode .
2. Press **Menu**, **2**, **2**, **0**.
3. Press ▲ or ▼ to choose `Letter`.
   Press **OK**.
4. Press **Stop/Exit**.

Colour fax transmission

Your machine can send a colour fax to machines that support this feature.

Colour faxes cannot be stored in the memory. When you send a colour fax, the machine will send it in real time (even if `Real Time TX` is set to `Off`).

Cancelling a fax in progress

If you want to cancel a fax while the machine is scanning, dialling or sending, press **Stop/Exit**.

Broadcasting (Monochrome only)

Broadcasting is when the same fax message is automatically sent to more than one fax number. You can include Groups, Speed Dial numbers and up to 50 manually dialled numbers in the same broadcast.

After the broadcast is finished, a Broadcast Report will be printed.

1. Make sure you are in Fax mode .
2. Load your document.
3. Enter a number. Press **OK**.
   You can use either a Speed Dial, a Group or a manually entered number using the dial pad.
4. Repeat ❸ until you have entered all the fax numbers to be included in the broadcast.
5. Press **Mono Start**.

Note

- If you did not use up any of the numbers for Groups, you can ‘broadcast’ faxes to as many as 90 different numbers.
- The available memory will vary depending on the types of jobs in the memory and the number of locations used for broadcasting. If you broadcast to the maximum numbers available, you will not be able to use dual access.
- If the memory is full, press **Stop/Exit** to stop the job. If more than one page has been scanned, press **Mono Start** to send the portion that is in the memory.

Cancelling a Broadcast in progress

1. Press **Menu**, **2**, **4**.
   The LCD will show the fax number being dialled.

   `#001 XXXX`

2. Press **OK**.
   The LCD will show the job number:

   `1.Clear  2.Exit`

3. Press **1** to cancel.
   The LCD will then show the Broadcast job number and `1.Clear  2.Exit`.

4. To cancel the Broadcast, press **1**.

5. Press **Stop/Exit**.

Additional sending operations

Sending faxes using multiple settings

When you send a fax you can choose any combination of these settings: resolution, contrast, scan size, overseas mode and real time transmission.

1. Make sure you are in Fax mode .

2. Load your document.

3. Choose a setting you want to change in the Setup Send menu (**Menu**, **2**, **2**).
   Press **OK**.

4. Choose the option you want for the setting.
   Press **OK**.

5. Do one of the following:

   `Next`

   `1.Yes 2.No`

   - Press **1** to change another setting.
   - Press **2** when you have finished choosing your settings.

6. Send the fax as normal.

Contrast

If your document is very light or very dark, you may want to change the contrast. For most documents the default setting `Auto` can be used. It automatically chooses the suitable contrast for your document.

Use `Light` when sending a light document.

Use `Dark` when sending a dark document.

1. Make sure you are in Fax mode .
2. Load your document.
3. Press **Menu**, **2**, **2**, **1**.
4. Press ▲ or ▼ to choose `Auto`, `Light` or `Dark`.
   Press **OK**.

Note

Even if you choose `Light` or `Dark`, the machine will send the fax using the `Auto` setting in any of the following conditions:

- When you send a colour fax.
- When you choose `Photo` as the Fax Resolution.

Changing fax resolution

The quality of a fax can be improved by changing the fax resolution. Resolution can be changed for the next fax *or* for all faxes.

To change the fax resolution for the *next* fax

1. Make sure you are in Fax mode .
2. Load your document.
3. Press **Fax Resolution** then ▲ or ▼ to choose the resolution.
   Press **OK**.

To change the default fax resolution

1. Make sure you are in Fax mode .
2. Press **Menu**, **2**, **2**, **2**.
3. Press ▲ or ▼ to choose the resolution you want.
   Press **OK**.

Note

You can choose four different resolution settings for monochrome faxes and two for colour.

Monochrome	
`Standard`	Suitable for most typed documents.
`Fine`	Good for small print and transmits a little slower than Standard resolution.
`S.Fine`	Good for small print or artwork and transmits slower than Fine resolution.
`Photo`	Use when the document has varying shades of grey or is a photograph. This has the slowest transmission.

Colour	
`Standard`	Suitable for most typed documents.
`Fine`	Use when the document is a photograph. The transmission time is slower than Standard resolution.

If you choose `S.Fine` or `Photo` and then use the **Colour Start** key to send a fax, the machine will send the fax using the `Fine` setting.

Dual access (Monochrome only)

You can dial a number and start scanning the fax into memory—even when the machine is sending from memory, receiving faxes or printing PC data. The LCD shows the new job number and available memory.

The number of pages you can scan into the memory will vary depending on the data that is printed on them.

Note

If the `Out of Memory` message appears while scanning documents, press **Stop/Exit** to cancel or **Mono Start** to send the scanned pages.

Real time transmission

When you are sending a fax, the machine will scan the documents into the memory before sending. Then, as soon as the telephone line is free, the machine will start dialling and sending.

If the memory is full and you are sending a black & white fax from the ADF, the machine will send the document in real time (even if `Real Time TX` is set to `Off`).

Sometimes, you may want to send an important document immediately, without waiting for memory transmission. You can set `Real Time TX` to `On` for all documents or `Next Fax Only` for the next fax only.

Note

In Real Time Transmission, the automatic redial feature does not work when using the scanner glass.

Sending in real time for all faxes

1. Make sure you are in Fax mode .
2. Press **Menu**, **2**, **2**, **3**.

   `3.Real Time TX`

   `Realtime TX:On`
3. Press ▲ or ▼ to choose `On` (or `Off`). Press **OK**.

Sending in real time for the next fax only

1. Make sure you are in Fax mode .
2. Press **Menu**, **2**, **2**, **3**.
3. Press ▲ or ▼ to choose `Next Fax Only`. Press **OK**.
4. Press ▲ or ▼ to choose `Next Fax:Off` or `Next Fax:On`.
5. Press **OK**.

Note

In real time transmission, the automatic redial feature does not work when using the scanner glass.

Overseas Mode

If you are having difficulty sending a fax overseas due to possible interference on the telephone line, we recommend that you turn on the Overseas mode. After you send a fax using this feature, the feature will turn itself off.

1. Make sure you are in Fax mode .
2. Load your document.
3. Press **Menu**, **2**, **2**, **4**.
4. Press ▲ or ▼ to choose `On` (or `Off`). Press **OK**.

Checking and cancelling waiting jobs

You can check which jobs are still waiting in the memory to be sent and cancel a job. (If there are no jobs, the LCD shows `No Jobs Waiting`.)

1. Press **Menu**, **2**, **4**.
   Any waiting jobs appear on the LCD.
2. Do one of the following:
   - Press ▲ or ▼ to scroll through the jobs and choose the job you want to cancel.

     Press **OK** to choose a job, and then press **1** to cancel it.
   - Press **2** to exit without cancelling.
3. When you have finished, press **Stop/Exit**.

Sending a fax manually

Manual transmission lets you hear the dialling, ringing and fax-receiving tones while sending a fax.

1. Make sure you are in Fax mode .
2. Load your document.
3. Pick up the handset of an external telephone and listen for a dial tone.
4. Dial the fax number you want to call.
5. When you hear the fax tone, press **Mono Start** or **Colour Start**.
   - If you load the document on the scanner glass, press **1** to send the fax.

   `1.Send 2.Receive`
6. Replace the handset.

Out of Memory message

If you get an `Out of Memory` message while scanning the first page of a fax, press **Stop/Exit** to cancel the fax.

If you get an `Out of Memory` message while scanning a subsequent page, you will have the option to press **Mono Start** or **Colour Start** to send the pages scanned so far, or to press **Stop/Exit** to cancel the operation.

Note

If you do not want to delete your stored faxes to clear the memory, you can change the setting to send the fax in real time. (See *Real time transmission* on page 30.)

6 Receiving a Fax

Receive modes

Choosing the Receive Mode

By default, your machine will automatically receive any faxes that are sent to it. The diagram below will help you choose the correct mode. For more detailed information on the receive modes see *Using receive modes* on page 33 and *Receive mode settings* on page 34.

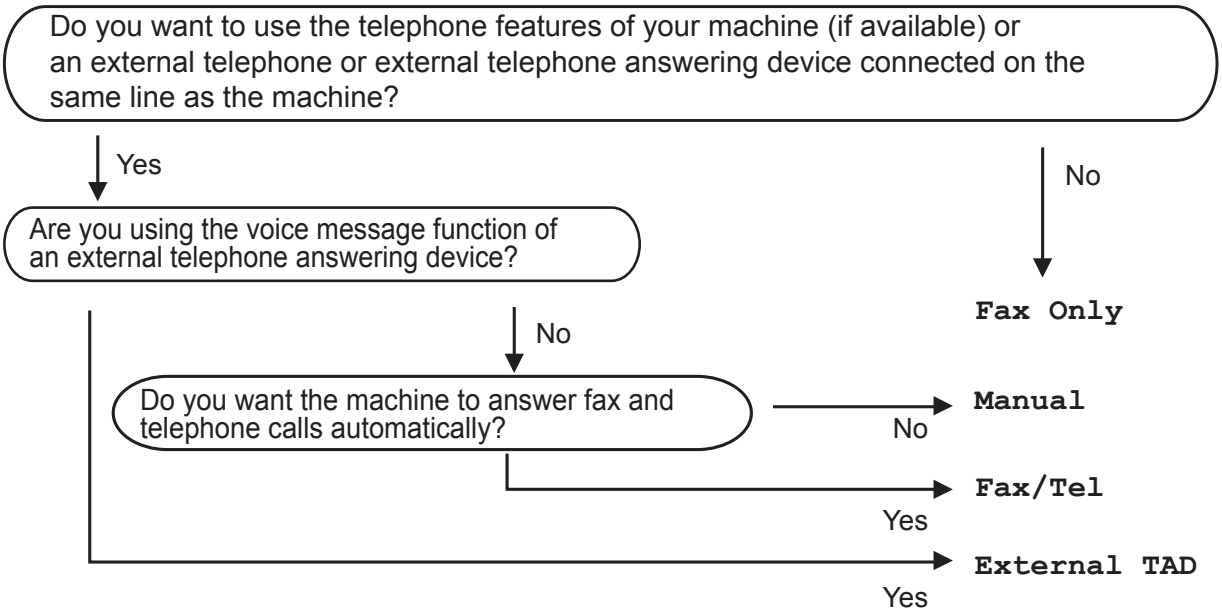

To set a receive mode follow the instructions below.

1. Press **Menu**, **0**, **1**.
2. Press ▲ or ▼ to choose `Fax Only`, `Fax/Tel`, `External TAD` or `Manual`.
   Press **OK**.
3. Press **Stop/Exit**.
   The LCD will display the current receive mode.

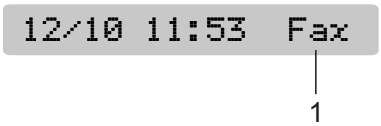

1 Current receive mode

`Fax`: Fax Only

Using receive modes

Some receive modes answer automatically (`Fax Only` and `Fax/Tel`). You may want to change the ring delay before using these modes. (See *Ring Delay* on page 34.)

Fax only

Fax only mode will automatically answer every call. If the call is a fax your machine will receive it.

Fax/Tel

Fax/Tel mode helps you automatically manage incoming calls, by recognising whether they are fax or voice calls and dealing with them in one of the following ways:

- Faxes will be automatically received.
- Voice calls will start the F/T ring to tell you to pick up the line. The F/T ring is a fast double ring made by your machine.

(Also see *F/T Ring Time (Fax/Tel mode only)* on page 34 and *Ring Delay* on page 34.)

Manual

To receive a fax in manual mode lift the handset of an external telephone. When you hear fax tones (short repeating beeps), press **Mono Start** or **Colour Start**, and choose `2.Receive`. You can also use the Fax Detect feature to receive faxes by lifting a handset on the same line as the machine.

(Also see *Fax Detect* on page 35.)

External TAD

External TAD mode lets an external answering device manage your incoming calls. Incoming calls will be dealt with in one of the following ways:

- Faxes will be automatically received.
- Voice callers can record a message on the external TAD.

(For more information see *Connecting an external TAD (telephone answering device)* on page 44.)

Note

- When Changing your Receive Mode, if the message appears `DR Mode in Use` (`Faxability on` for New Zealand), please go to page 38 (page 41 for New Zealand) to turn Distinctive Ring Off. Then return to change your receive mode.
- Do not turn off Distinctive Ring if you are subscribed to FaxStream® Duet®.

Receive mode settings

Ring Delay

The Ring Delay sets the number of times the machine rings before it answers in `Fax Only` or `Fax/Tel` mode. If you have external or extension telephones on the same line as the machine choose the maximum number of rings.

(See *Operation from extension telephones* on page 46 and *Fax Detect* on page 35.)

1. Press **Menu**, **2**, **1**, **1**.
2. Press ▲ or ▼ to choose how many times the line rings before the machine answers. (`02-10` for Australia, `01-10` for New Zealand, `00-10` for some countries).
   Press **OK**.
   If you choose `00`, the line will not ring at all.
3. Press **Stop/Exit**.

F/T Ring Time (Fax/Tel mode only)

When somebody calls your machine, you and your caller will hear the normal telephone ring sound. The number of rings is set by the ring delay setting.

If the call is a fax, then your machine will receive it; however, if it is a voice call the machine will sound the F/T ring (a fast double-ring) for the time you have set in the F/T ring time setting. If you hear the F/T ring it means that you have a voice caller on the line.

Because the F/T ring is made by the machine, extension and external telephones will *not* ring; however, you can still answer the call on any telephone. (For more information see *Using remote codes* on page 46.)

1. Press **Menu**, **2**, **1**, **2**.
2. Press ▲ or ▼ to choose how long the machine will ring to alert you that you have a voice call (20, 30, 40 or 70 seconds for Australia and some countries, 20, 30, 40 or 55 seconds for New Zealand).
   Press **OK**.
3. Press **Stop/Exit**.

Note

Even if the caller hangs up during the F/T ring, the machine will continue to ring for the set time.

Fax Detect

If Fax Detect is On:

Fax Detect is turned On as default.

The machine receives a fax call automatically, even if you answer the call. When you see Receiving on the LCD or when you hear 'chirps' through the handset you are using, just replace the handset. Your machine will do the rest.

If Fax Detect is Off:

If you are at the machine and answer a fax call by lifting the handset, press **Mono Start** or **Colour Start**, then press **2** to receive the fax.

If you answered at an extension telephone, press ∗ **5 1** (∗ **9 1** for New Zealand). (See *Operation from extension telephones* on page 46.)

Note

- If this feature is set to On, but your machine does not connect a fax call when you lift an extension or external telephone handset, press the Remote Activation Code ∗ **5 1** (∗ **9 1** for New Zealand).
- If you send faxes from a computer on the same telephone line and the machine intercepts them, set Fax Detect to Off.

1. Press **Menu**, **2**, **1**, **3**.
2. Press ▲ or ▼ to choose On (or Off). Press **OK**.
3. Press **Stop/Exit**.

Additional receiving operations

Printing a reduced incoming fax

If you choose On, the machine automatically reduces each page of an incoming fax to fit on one page of A4, Letter or Legal size paper.

The machine calculates the reduction ratio by using the page size of the fax and your Paper Size setting (**Menu**, **1**, **3**).

1. Make sure you are in Fax mode .
2. Press **Menu**, **2**, **1**, **5**.

   5.Auto Reduction
3. Press ▲ or ▼ to choose On or Off. Press **OK**.
4. Press **Stop/Exit**.

Out of Paper Reception

As soon as the paper tray becomes empty during fax reception, the screen will display No Paper Fed, asking you to put paper in the paper tray. (See *Loading paper and other print media* on page 8.)

The machine will carry on receiving the fax, with the remaining pages being stored in memory, if enough memory is available.

Further incoming faxes will also be stored into memory until the memory is full. When the memory is full the machine will stop automatically answering calls. To print the faxes, put fresh paper in the tray.

7 Telephone and External devices

Voice Operations

Voice calls can be made either with an extension or external telephone, by dialling manually, or by using Speed Dial numbers.

Tone or pulse (Not Available for New Zealand)

If you are using an external telephone and have a pulse dialling service, but need to send tone signals (for example, for telephone banking), follow the instructions below.

1. Lift the handset of the external telephone.
2. Press **#** on the control panel of your machine. Any digits dialled after this will send tone signals.
   When you hang up, the machine will return to the pulse dialling service.

Fax/Tel mode

When the machine is in Fax/Tel mode, it will use the F/T Ring Time (pseudo/double-ringing) to alert you to pick up a voice call.

If you are at an external telephone, lift the handset of the external telephone, and then press **Hook** to answer.

If you are at an extension telephone, you'll need to lift the handset during the F/T Ring Time and then press **# 5 1** (**# 9 1** for New Zealand) between the pseudo/double-rings. If no one is on the line, or if someone wants to send you a fax, send the call back to the machine by pressing **∗ 5 1** (**∗ 9 1** for New Zealand).

Telephone Service for Australia

Telstra® FaxStream® Duet® (Distinctive Ring)

Telstra® FaxStream® Duet® is an enhanced Public Switched Telephone Service (PSTS) offered by Telstra® that allows you to have an additional number on one phone line, with its own distinctive ring pattern. Telstra® FaxStream® Duet® is a call handling feature that helps users distinguish voice and facsimile calls. With FaxStream® Duet®, incoming calls to a fax number are announced by a different, distinctive ring signal. Only one call can be answered (or made) at any one time and while this call is in progress, incoming calls to either number will be presented with a busy tone.

Your machine has a Distinctive Ring function, allowing you to dedicate one phone number just for receiving faxes.

Note

After you have set the Distinctive Ring feature to `On`, the receive mode is set to `Manual` automatically. Your Distinctive Ring Number does not allow Voice calls - only Faxes. You can not change the receive mode from `Manual` mode while the Distinctive Ring is set to on.

What is the Advantage of using Telstra® FaxStream® Duet® Function?

Using Telstra® FaxStream® Duet® is the most efficient way to receive both fax and telephone calls on the same line. When the voice call comes in, all phones (extension and external) and the fax machine will ring to alert you to pick it up. If a fax call comes in, the fax machine will answer automatically without ringing, whereas the extension and external phones will ring twice with a distinctive ring pattern. It is also a more efficient way of operating a Fax machine with an extension phone as you do not have to use the remote activation codes. It gives you two independent numbers without the higher cost of a second line.

How does Telstra® FaxStream® Duet® Work?

Incoming calls to the voice number, will have the standard ring pattern of long, long tone, followed by a pause, repeated, while the new fax number will have a different ring pattern of three short bursts of ring, repeated at regular intervals.

When FaxStream® Duet® is On and you receive a voice call all extension and external phones will ring with a standard ring pattern. The fax machine will ring on the third ring with a standard ring pattern. All external and the extension phones will continue to ring, until you or a telephone answering device can answer the voice number.

When FaxStream® Duet® is On and you receive a fax call on the Duet® number the Fax machine will answer and automatically receive the fax message without ringing. On the other hand, all extension and external phones will ring twice with a distinctive ring pattern. Do not answer the phone as you are receiving a fax message.

Flowchart Sequence of Incoming call

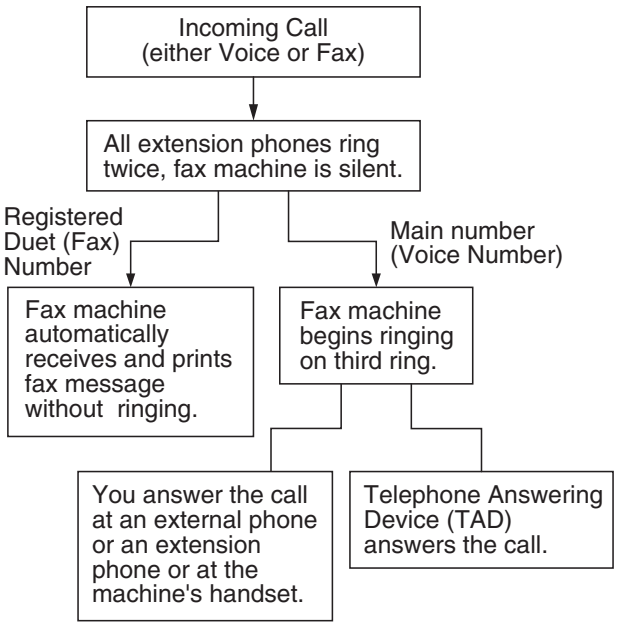

Registering the Distinctive Ring pattern

Very Important!

After you have set the Distinctive Ring feature to on, the receive mode is set to `Manual` automatically. Your Distinctive Ring Number does not allow Voice calls - only Faxes. You cannot change the receive mode to another mode while the Distinctive Ring is set to on.

1. Press **Menu**, **2**, **0**, **3**.

   `0.Miscellaneous`

   `3.Distinctive`

2. Press ▲ or ▼ to choose `On`.
   Press **OK**.

3. Press **Stop/Exit**.
   Distinctive Ring is now set to on.

Turning off Distinctive Ring

1. Press **Menu**, **2**, **0**, **3**.

   `0.Miscellaneous`

   `3.Distinctive`

2. Press ▲ or ▼ to choose `Off`.
   Press **OK**.

3. Press **Stop/Exit**.

Note

If you turn off Distinctive Ring, the machine will stay in `Manual` receive mode. You will need to set the Receive Mode again. (See *Choosing the Receive Mode* on page 32.)

Caller ID

Caller ID is a telephone service that allows the subscriber to see a display of the caller's phone number or name as the telephone rings. It is a fast way to screen your calls. You can respond quickly to calls you missed, because Caller IDs are received and stored in your machine memory.

Note

To get the Caller ID Service: apply for the Caller ID service at your local telephone company, if available.

Advantages of Caller ID

For Business

All businesses profit from a quicker response to customer calls. Businesses that provide mail order services, money-lending services or provide confidential information, can protect themselves from false orders or acceptance of false identification.

At Home

Residential customers can protect themselves from unwanted calls.

How Does the Caller ID Work?

The Caller ID Appears on the Display When Your Telephone Rings

As your telephone rings, the display shows you the caller's phone number or name if the name has stored in the Speed-Dial. Once you answer the call, the caller's ID disappears. You will see up to the first 16 characters of the number on the display.

Note

- If `ID Unknown` appears on the display, it means that the call came from outside your caller ID service area or a public phone. [1]
- If `ID Withheld` appears on the display, it means the caller intentionally blocked the transmission of his/her ID. [1]

[1] Depends on network function.

The Caller ID is Stored in Your Machine Memory

The machine can store a maximum of the last 30 incoming caller IDs in the memory, along with the time and date of reception. The 31st call will cause the oldest ID to be erased.

The Caller ID information stored in the memory can be used for the following.

■ **Printing the Caller ID List.**

You can review calls you received by checking the Caller IDs in memory. This report will list the Date, Time, Phone Number (Caller ID) name, and type of Call (Comment) if available.

Viewing Caller ID List

1. Press **Menu**, **2**, **0**, **4**.

   `0.Miscellaneous`

   `4.Caller ID`

2. Press ▲ or ▼ to choose `Display#`.
   Press **OK**.
   The Caller ID of the last call will appear on the display. If no ID is stored, the beeper will sound and `No Caller ID` will appear on the display.

3. Press ▲ or ▼ to scroll through the Caller ID memory to choose the Caller ID you want to view.
   Press **OK**.
   The LCD shows the caller's number, the date, and time of the call.

4. Do one of the following:
   - ■ To return to the Caller ID listing, press ▲ or ▼.
   - ■ To finish viewing, press **Stop/Exit**.

Printing Caller ID List

1. Press **Menu**, **2**, **0**, **4**.

   `0.Miscellaneous`

   `4.Caller ID`

2. Press ▲ or ▼ to choose `Print Report`.
   Press **OK**.
   If no ID is stored, the beeper will sound and `No Caller ID` will appear on the LCD.

3. Press **Mono Start** or **Colour Start**.

4. When the printing has finished, press **Stop/Exit**.

Telephone Service for New Zealand

FaxAbility

FaxAbility is a service offered by Telecom that allows you to have an additional number on one phone line, with its own distinctive ring pattern. This way, when you get an incoming call, you can identify the number being called by its ring.

How Will the Fax Machine Treat All Other Numbers?

FaxAbility mode ensures that the machine will answer calls to the FaxAbility (secondary) number. When a call comes in to your main number, all the phones will ring. You can set an external answering device (TAD) to answer calls on the other number(s). (See the chart in the following page.)

What is the Advantage of Using the FaxAbility Function?

Using FaxAbility is the most efficient way to receive both fax and telephone calls on the same line. It is much easier for your callers who dial manually. The fax machine will answer with receiving tones so they will not have to press an activation code. And the people who call to talk on your main number will not have to talk to your fax machine. Basically, it gives you two independent numbers without the higher cost of a second line.

How Does FaxAbility Work?

Your telephone number will have the standard ring pattern of long, long tone, while the new number will have a ring pattern of long, silence, long, etc. When FaxAbility is On, you will not hear the first ring of all incoming calls on the fax machine. Extension phones will ring as usual. If the fax machine recognizes the ring pattern, all ringing will stop and the fax machine will answer and automatically receive the fax message. Otherwise, you will hear the extension phones and the fax machine continue to ring. The fax machine always listens to the ring pattern before it answers, so do not pick up the phone during that time. You will quickly learn to recognize the ring pattern for faxes, so you will not be tempted to answer that number. Either you or a telephone answering device can answer the main number(s).

Flowchart Sequence of Incoming call

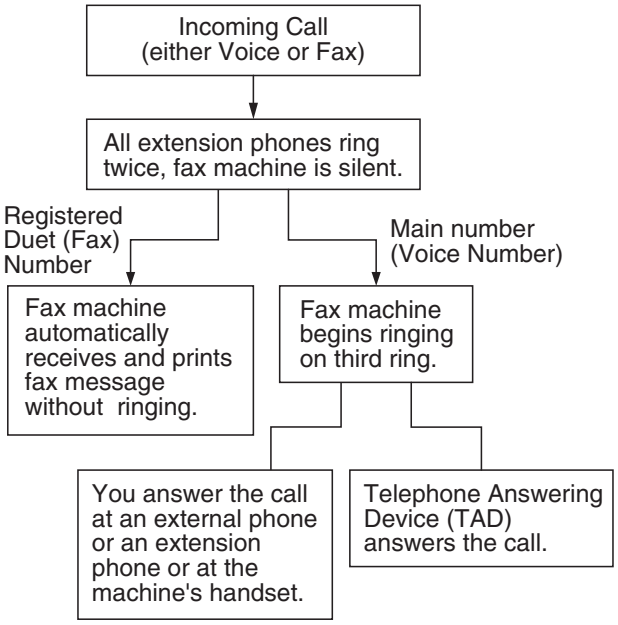

Note

After you have set the FaxAbility feature to `On`, the receive mode is set to `Manual` automatically. Unless you have a TAD or Voice Mail set up on the FaxAbility number, Manual mode means you must answer all the call yourself. You can not change the receive mode to the other mode while the FaxAbility is set to on.

How to Turn FaxAbility OFF or ON

The FaxAbility function is designed to accommodate the FaxAbility service provided by Telecom. To change the setting, repeat steps ❶-❸; Step ❷ is where you can choose either On or Off.

Call Waiting beeps caused by incoming calls on your main number can affect fax transmissions. If you have FaxAbility Service but don't have Call Waiting, you need do nothing at this stage. If you do have Call Waiting as well as FaxAbility, set the Call Waiting menu option to On. See below.

1. Press **Menu**, **2**, **0**, **3**.

   0.Miscellaneous

   3.Faxability

2. Press ▲ or ▼ to set FaxAbility to On (or Off).
   If you have FaxAbility service, choose On.
   Press **OK**.

3. Press ▲ or ▼ to choose Call Waiting to On (or Off).
   If you have Call Waiting service, choose On to avoid the trouble caused by Call Waiting.
   Press **OK**.

4. Press **Stop/Exit**.

Caller ID

Caller ID is a telephone service that allows the subscriber to see a display of the caller's phone number and name if available as the telephone rings. It is a fast way to screen your calls. You can respond quickly to calls you missed, because Caller IDs are received and stored in your machine memory.

Note

To get the Caller ID Service, apply for the Caller ID service at your local telephone company, if available.

Advantages of Caller ID

For Business

All businesses profit from a quicker response to customer calls. Businesses that provide mail order services, money-lending services or provide confidential information, can protect themselves from false orders or acceptance of false identification.

At Home

Residential customers can protect themselves from unwanted calls.

How Does the Caller ID Work?

The Caller ID Appears on the Display When Your Telephone Rings

As your telephone rings, the display shows you the caller's phone number or name if available. Once you answer the call, the caller's ID disappears. You will see up to the first 16 characters of the number and name if available on the display.

Note

- If ID Unknown appears on the display, it means that the call came from outside your caller ID service area. [1]
- If ID Withheld appears on the display, it means the caller intentionally blocked the transmission of his/her ID. [1]

[1] Depends on network function.

Viewing Caller ID List

Your machine stores information for the last thirty calls in the Caller ID list. You can view or print this list. When the thirty-first call comes in to the machine, it replaces information about the first call.

1. Press **Menu**, **2**, **0**, **4**.

   0.Miscellaneous

   4.Caller ID

2 Press ▲ or ▼ to choose `Display#`.
Press **OK**.
The Caller ID of the last call will appear on the display. If no ID is stored, the beeper will sound and `No Caller ID` will appear on the display.

3 Press ▲ or ▼ to scroll through the Caller ID memory to choose the Caller ID you want to view.
Press **OK**.
The LCD shows the caller's number, the date, and time of the call.

4 Do one of the following:

- To return to the Caller ID listing, press ▲ or ▼.
- To finish viewing, press **Stop/Exit**.

Printing Caller ID List

1 Press **Menu**, **2**, **0**, **4**.

```
0.Miscellaneous
```

```
4.Caller ID
```

2 Press ▲ or ▼ to choose `Print Report`.
Press **OK**.
If no ID is stored, the beeper will sound and `No Caller ID` will appear on the LCD.

3 Press **Mono Start** or **Colour Start**.

4 When the printing has finished, press **Stop/Exit**.

Note

If you use the Caller ID for Dial back;

- Please be sure that you use appropriate dialling procedures for local and national call.
- Please be sure that you make sure of the details of the exact number to be called back, and the need to insert prefix(es) for manual dialling.
- Please understand that your machine may not display precisely the digits to be called.

Telephone Service for Some Countries

Distinctive Ring (For Singapore and Hong Kong)

This machine feature lets you use the Distinctive Ring subscriber service offered by some telephone companies, which allows you to have several telephone numbers on one phone line. Each phone number has its own Distinctive Ring pattern, so you will know which phone number is ringing. This is one way you can have a separate phone number for your machine.

Your machine has a Distinctive Ring function, allowing you to dedicate one phone number just for receiving faxes. You will need to set Distinctive Ring to `On`.

Note

You can switch it off temporarily, then turn it back on. When you get a new fax number, make sure you reset this function.

- The machine will answer only calls to the Distinctive Ring number.

Registering the Distinctive Ring pattern

Very Important!

After you have set the Distinctive Ring feature to on, the receive mode is set to `Manual` automatically. Unless you have a TAD or Voice Mail set up on the Distinctive Ring number, `Manual` mode means you must answer all the calls yourself. You cannot change the receive mode to another mode while the Distinctive Ring is set to on.

1. Press **Menu**, **2**, **0**, **3**.

   `0.Miscellaneous`

   `3.Distinctive`

2. Press ▲ or ▼ to choose `On`.
   Press **OK**.

3. Press **Stop/Exit**.
   Distinctive Ring is now set to on.

Turning off Distinctive Ring

1. Press **Menu**, **2**, **0**, **3**.

   `0.Miscellaneous`

   `3.Distinctive`

2. Press ▲ or ▼ to choose `Off`.
   Press **OK**.

3. Press **Stop/Exit**.

Note

If you turn off Distinctive Ring, the machine will stay in `Manual` receive mode. You will need to set the Receive Mode again. (See *Choosing the Receive Mode* on page 32.)

Caller ID (For Singapore and Hong Kong)

The Caller ID feature of this machine lets you use the Caller ID subscriber service offered by many local phone companies. Call your telephone company for details. This service provides you, by means of the screen display, the telephone number (or name) of your caller as the line rings. (See *Printing Caller ID List* on page 44.)

After a few rings, the screen displays the telephone number of your caller (or name, if available). Once you answer the call, the Caller ID information disappears from the screen, but the call information remains stored in the Caller ID memory.

- You will see the first 16 characters of the number or name.
- `ID Unknown` display means call originates outside your Caller ID service area.
- `ID Withheld` display means the caller has intentionally blocked transmission of information.

Note

You can print a list of Caller ID information received by your machine.

Caller ID service varies with different carriers. Call your local phone company to determine the kind of service available in your area.

Viewing Caller ID List

Your machine stores information for the last thirty calls in the Caller ID list. You can view or print this list. When the thirty-first call comes in to the machine, it replaces information about the first call.

1. Press **Menu**, **2**, **0**, **4**.

   `0.Miscellaneous`

   `4.Caller ID`

2. Press ▲ or ▼ to choose `Display#`.
   Press **OK**.
   The Caller ID of the last call will appear on the display. If no ID is stored, the beeper will sound and `No Caller ID` will appear on the display.

3. Press ▲ or ▼ to scroll through the Caller ID memory to choose the Caller ID you want to view.
   Press **OK**.
   The LCD shows the caller's number, the date, and time of the call.

4. Do one of the following:
   - To return to the Caller ID listing, press ▲ or ▼.
   - To finish viewing, press **Stop/Exit**.

Printing Caller ID List

1. Press **Menu**, **2**, **0**, **4**.

   `0.Miscellaneous`

   `4.Caller ID`

2. Press ▲ or ▼ to choose `Print Report`.
   Press **OK**.
   If no ID is stored, the beeper will sound and `No Caller ID` will appear on the LCD.

3. Press **Mono Start** or **Colour Start**.

4. When the printing has finished, press **Stop/Exit**.

Connecting an external TAD (telephone answering device)

You may choose to connect an external answering device. However, when you have an **external** TAD on the same telephone line as the machine, the TAD answers all calls and the machine 'listens' for fax calling (CNG) tones. If it hears them, the machine takes over the call and receives the fax. If it does not hear CNG tones, the machine lets the TAD continue playing your outgoing message so your caller can leave you a voice message.

The TAD must answer within two rings (the recommended setting is two rings). The machine cannot hear CNG tones until the TAD has answered the call, and with four rings there are only 8 to 10 seconds of CNG tones left for the fax 'handshake'. Make sure you carefully follow the instructions in this guide for recording your outgoing message. We do not recommend using the toll saver feature on your external answering machine if it exceeds five rings.

Note

If you do not receive all your faxes, cut the Ring Delay setting on your external TAD.

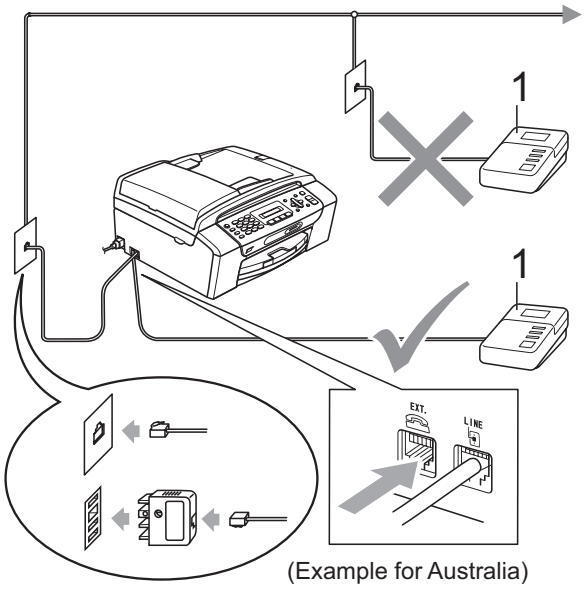

(Example for Australia)

1 TAD

When the TAD answers a call, the LCD shows `Telephone`.

Improper Setup

DO NOT connect a TAD elsewhere on the same telephone line.

Connections

The external TAD must be connected as shown in the previous illustration.

1. Set your external TAD to one or two rings. (The machine's Ring Delay setting does not apply.)
2. Record the outgoing message on your external TAD.
3. Set the TAD to answer calls.
4. Set the Receive Mode to `External TAD`. (See *Choosing the Receive Mode* on page 32.)

Recording an outgoing message (OGM) on an external TAD

Timing is important in recording this message. The message sets up the ways to handle both manual and automatic fax reception.

1. Record 5 seconds of silence at the beginning of your message. (This allows your machine time to listen for the fax CNG tones of automatic transmissions before they stop.)
2. Limit your speaking to 20 seconds.

Note

We recommend beginning your OGM with an initial 5-second silence because the machine cannot hear fax tones over a resonant or loud voice. You may try omitting this pause, but if your machine has trouble receiving, then you must re-record the OGM to include it.

Multi-line connections (PABX)

Most offices use a central telephone system.

Brother recommends that all our machines be connected to a discreet (dedicated) line. Although a particular PABX may appear to work with a particular model of fax machine, we cannot guarantee that the unit will operate correctly.

While it is often relatively simple to connect a fax machine to a PABX, (Private Automatic Branch Exchange), we suggest that you contact the company that installed your telephone system and ask them to connect the fax machine for you.

Brother does not recommend the use of a PABX line. PABX limitations in general can cause some functions of the fax machine not to work correctly.

External and extension telephones

Connecting an external or extension telephone

You can connect a separate telephone as shown in the diagram below.

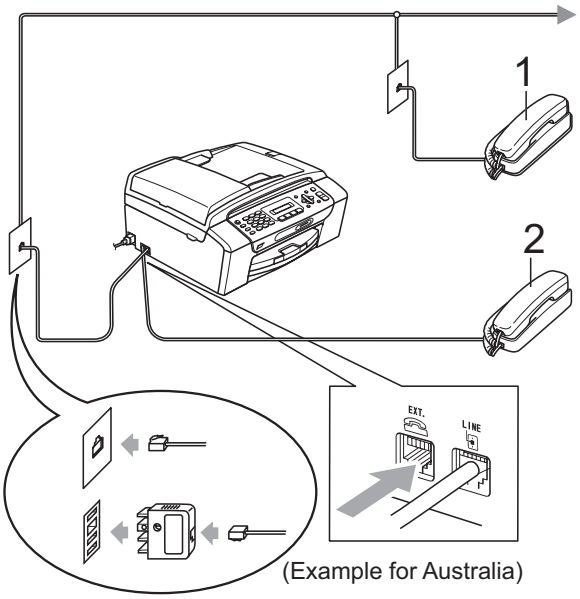

1 Extension telephone

2 External telephone

When you are using an external telephone, the LCD shows `Telephone`.

Operation from extension telephones

If you answer a fax call on an extension or an external telephone plugged into the correct socket on the machine, you can make your machine take the call by using the Remote Activation Code. When you press the Remote Activation Code ∗ **5 1** (∗ **9 1** for New Zealand), the machine starts to receive the fax.

If the machine answers a voice call and pseudo/double-rings for you to take over, use the Remote Deactivation Code **# 5 1** (**# 9 1** for New Zealand) to take the call at an extension telephone. (See *F/T Ring Time (Fax/Tel mode only)* on page 34.)

If you answer a call and no one is on the line:

You should assume that you're receiving a manual fax.

Press ∗ **5 1** (∗ **9 1** for New Zealand) and wait for the chirp or until the LCD shows `Receiving`, and then hang up.

Note

You can also use the Fax Detect feature to make your machine automatically take the call. (See *Fax Detect* on page 35.)

Using a cordless external telephone

Once the base unit of the cordless telephone has been connected to the same telephone line as the machine (see *External and extension telephones* on page 46), it is easier to answer calls during the Ring Delay if you carry the cordless handset around with you.

If you let the machine answer first, you will have to go to the machine so you can press **Hook** to send the call to the cordless handset.

Using remote codes

Remote Activation Code

If you answer a fax call on an extension telephone, you can tell your machine to receive it by dialling the Remote Activation Code ∗ **5 1** (∗ **9 1** for New Zealand). Wait for the chirping sounds then replace the handset. (See *Fax Detect* on page 35.)

If you answer a fax call at the external telephone, you can make the machine receive the fax by pressing **Mono Start**.

Remote Deactivation Code

If you receive a voice call and the machine is in F/T mode, it will start to sound the F/T (double) ring after the initial ring delay. If you pick up the call on an extension telephone you can turn the F/T ring off by pressing **# 5 1** (**# 9 1** for New Zealand) (make sure you press this *between* the rings).

If the machine answers a voice call and pseudo/double rings for you to take over, you can take the call at the external telephone by pressing **Hook**.

Changing the remote codes

If you want to use Remote Activation, you have to turn on the remote codes. The preset Remote Activation Code is ∗ **5 1** (∗ **9 1** for New Zealand). The preset Remote Deactivation Code is **# 5 1** (**# 9 1** for New Zealand). If you want to, you can replace them with your own codes.

1. Press **Menu**, **2**, **1**, **4**.

   `1.Setup Receive`

   `4.Remote Codes`

2. Press ▲ or ▼ to choose `On` (or `Off`).
   Press **OK**.

3. Enter the new Remote Activation Code.
   Press **OK**.

4. Enter the new Remote Deactivation Code.
   Press **OK**.

5. Press **Stop/Exit**.

Note

- If you are always disconnected when accessing your external TAD remotely, try changing the Remote Activation Code and Remote Deactivation Code to another three-digit code using the numbers **0**-**9**, ∗, **#**.
- Remote Codes might not work with some telephone systems.

8 Dialling and storing numbers

How to Dial

Manual dialling

Press all of the digits of the fax or telephone number.

Speed Dialling

1. Press (**Speed Dial**).

2. Press **OK** and the **#** (hash) key, and then the two digit Speed Dial number using the dial pad.

Note

If the LCD shows `Not Registered` when you enter a Speed Dial number, a number has not been stored at this location.

Search

You can search for names you have stored in the Speed Dial memory.

1. Press (**Speed Dial**).
2. Press ▲ or ▼ to choose `Search`. Press **OK**.
3. Do one of the following:
   - To search numerically, press ▲ or ▼ to choose the number, and then press **OK**.
   - To search alphabetically, enter the first letter of the name using the dial pad, then press ◀ or ▶ to choose the name, and then press **OK**.

Fax Redial

If you are sending a fax manually and the line is busy, press **Redial/Pause**, and then press **Mono Start** or **Colour Start** to try again. If you want to make a second call to the last number dialled, you can save time by pressing **Redial/Pause** and **Mono Start** or **Colour Start**.

Redial/Pause only works if you dialled from the control panel.

If you are sending a fax automatically and the line is busy, the machine will automatically redial up to three times at five minute intervals.

Note

In Real Time Transmission the automatic redial feature does not work when using the scanner glass.

Storing numbers

You can set up your machine to do the following types of easy dialling: Speed Dial and Groups for broadcasting faxes. When you dial a Quick Dial number, the LCD shows the name, if you stored it, or the number.

Note

If you lose electrical power, the Quick Dial numbers that are in the memory will not be lost.

Storing a pause

Press **Redial/Pause** to put a 3.5-second pause between numbers. If you are dialling overseas, you can press **Redial/Pause** as many times as needed to increase the length of the pause.

Storing Speed Dial numbers

You can store up to 40 2-digit Speed Dial locations with a name. When you dial you will only have to press a few keys (For example: **Speed Dial**, **OK**, **#**, the two-digit number, and **Mono Start** or **Colour Start**).

1. Press (**Speed Dial**) and ▲ or ▼ to choose `Set Speed Dial`.
   Press **OK**.
2. Use the dial pad to enter a 2-digit Speed Dial location number (01-40).
   Press **OK**.
3. Enter the fax or telephone number (up to 20 digits).
   Press **OK**.
4. Do one of the following:
   - Enter the name (up to 16 characters) using the dial pad.

     Press **OK**. (To help you enter letters, see *Entering Text* on page 127.)
   - To store the number without a name, press **OK**.
5. Do one of the following:
   - To store another Speed Dial number, go to step ❷.
   - To finish the setting, press **Stop/Exit**.

Changing Speed Dial numbers

If you try to store a Speed Dial number where a number has already been stored, the LCD will show the name or number that has been stored there, and will ask you to do one of the following:

```
#05:MIKE
```

```
1.Change  2.Exit
```

- Press **1** to change the stored number.
- Press **2** to exit without making a change.

If you chose **1**, you will be able to change the stored number and name, or enter a new one. Follow the instructions below:

1. Enter a new number. Press **OK**.
2. Enter a new name. Press **OK**.

- To change a character, use ◀ or ▶ to position the cursor under the character you want to change, then press **Clear/Back**. Re-enter the character.
- To finish the setting, press **Stop/Exit**.

Setting up groups for broadcasting

Groups, which can be stored in a Speed Dial location, allow you to send the same fax message to many fax numbers by pressing only (**Speed Dial**), `Search`, **OK**, **#**, the two-digit location and **Mono Start**. First, you'll need to store each fax number in a Speed-Dial location. Then you can include them as numbers in the Group. Each Group uses up a Speed Dial location. You can have up to six Groups, or you can assign up to 39 numbers in a large Group.

(See *Storing Speed Dial numbers* on page 49 and *Broadcasting (Monochrome only)* on page 27.)

1. Press (**Speed Dial**) and ▲ or ▼ to choose `Setup Groups`.
   Press **OK**.
2. Use the dial pad to enter the two-digit Speed Dial number where you want to store the Group.
   Press **OK**.
3. Use the dial pad to enter a Group number (1 to 6).
   Press **OK**.

   `Setup Group:G0_`
4. To add Speed Dial numbers follow the instructions below:
   For example, for Speed Dial numbers 05 and 09. Press (**Speed Dial**), **05**, (**Speed Dial**), **09**.
   The LCD shows:

   `G01:#05#09`
5. Press **OK** when you have finished adding numbers.
6. Use the dial pad to enter a name for the Group.
   Press **OK**.

Note

You can easily print a list of all your Speed Dial numbers. Numbers that are part of a group will be marked in the GROUP column. (See *How to print a report* on page 52.)

Combining Quick Dial numbers

Sometimes you may want to choose from several long distance carriers when you make a call. Rates may vary depending on the time and destination. To take advantage of low rates, you can store the access codes of long-distance carriers and credit card numbers as Speed Dial numbers. You can store these long dialling sequences by dividing them and setting them up as separate Speed Dial numbers in any combination. You can even include manual dialling using the dial pad. (See *Storing Speed Dial numbers* on page 49.)

For example, you might have stored ‘555’ on Speed Dial #03 and ‘7000’ on Speed Dial #02. You can use them both to dial ‘555-7000’ if you press the following keys:

(**Speed Dial**), **OK**, **#03**, (**Speed Dial**), **#02**, and **Start**.

To temporarily change a number, you can substitute part of the number with manual dialling using the dial pad. For example, to change the number to 555-7001 you could press the following keys:

(**Speed Dial**), **OK**, **#03**, **7**, **0**, **0**, **1** (on the dial pad), and **Start**.

You can also add a pause by pressing the **Redial/Pause** key.

9 Printing Reports

Fax reports

You need to set up the Transmission Verification Report and Journal Period using the **Menu** key.

Transmission Verification Report

You can use the Transmission Report as proof that you sent a fax. This report lists the time and date of transmission and whether the transmission was successful (OK). If you choose `On` or `On+Image`, the report will print for every fax you send.

If you send a lot of faxes to the same place, you may need more than the job numbers to know which faxes you must send again. Choosing `On+Image` or `Off+Image` will print a section of the fax's first page on the report to help you remember.

When the Verification Report is turned `Off` or `Off+Image` , the Report will only print if there is a transmission error, and the fax could not be sent.

If you choose `On+Image` or `Off+Image` the image will only appear on the Transmission Verification Report if Real Time Transmission is set to `Off`. (See *Real time transmission* on page 30.)

1. Press **Menu**, **2**, **3**, **1**.
2. Press ▲ or ▼ to choose `Off+Image`, `On`, `On+Image` or `Off`.
   Press **OK**.
3. Press **Stop/Exit**.

Fax Journal (activity report)

You can set the machine to print a journal at specific intervals (every 50 faxes, 6, 12 or 24 hours, 2 or 7 days). If you set the interval to `Off`, you can still print the report by following the steps in *Reports* on page 52. The default setting is `Every 50 Faxes`.

1. Press **Menu**, **2**, **3**, **2**.
2. Press ▲ or ▼ to choose an interval.
   Press **OK**.
   (If you choose 7 days, the LCD will ask you to choose the first day for the 7-day countdown.)
   - 6, 12, 24 hours, 2 or 7 days

     The machine will print the report at the chosen time and then erase all jobs from its memory. If the machine's memory is filled with the maximum 200 jobs before the time you chose has passed, the machine will print the Journal early and then erase all jobs from the memory. If you want an extra report before it is due to print, you can print it without erasing the jobs from the memory.
   - Every 50 Faxes

     The machine will print the Journal when the machine has stored 50 jobs.
3. Enter the time to start printing in 24-hour format.
   Press **OK**.
   (For example: enter 19:45 for 7:45 PM.)
4. Press **Stop/Exit**.

Reports

The following reports are available:

`1.XMIT Verify`

Prints a Transmission Verification Report for your last transmission.

`2.Help List`

A help list showing how to program your machine.

`3.Quick Dial`

Lists names and numbers stored in the Speed Dial memory, in numerical order.

`4.Fax Journal`

Lists information about the last incoming and outgoing faxes.
(TX: Transmit.) (RX: Receive.)

`5.User Settings`

Lists your settings.

How to print a report

1. Press **Menu**, **5**.
2. Do one of the following:
   - Press ▲ or ▼ to choose the report you want. Press **OK**.
   - Enter the number of the report you want to print. For example, press **2** to print the help list.
3. Press **Mono Start**.
4. Press **Stop/Exit**.

Section III

Copy

Making copies 54

10 Making copies

How to copy

Entering Copy mode

Press (**Copy**) to enter Copy mode. The default setting is Fax. You can change the number of seconds or minutes that the machine stays in Copy mode. (See *Mode Timer* on page 19.)

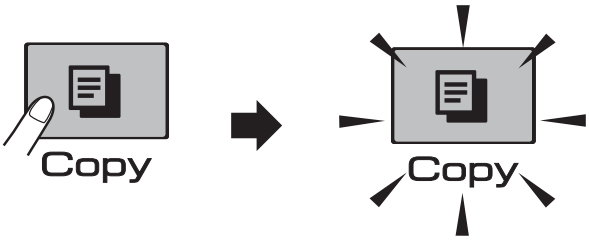

The LCD shows the default copy setting:

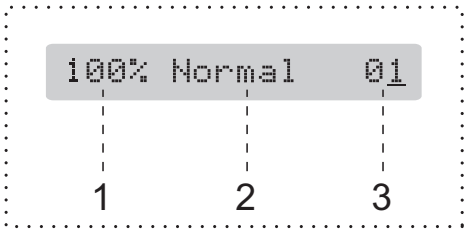

1 **Copy Ratio**

2 **Quality**

3 **No of Copies**

Making a single copy

1. Make sure you are in Copy mode .
2. Load your document.
   (See *Loading documents* on page 17.)
3. Press **Mono Start** for B&W copy or **Colour Start** for colour copy.

Making multiple copies

You can make up to 99 copies in one print run.

1. Make sure you are in Copy mode .
2. Load your document.
   (See *Loading documents* on page 17.)
3. Use the dial pad to enter the number of copies (up to 99).
4. Press **Mono Start** for B&W copy or **Colour Start** for colour copy.

Note

(MFC-290C only)

To sort your copies, press the **Copy Options** key. (See *Sorting copies using the ADF (Monochrome only) (MFC-290C only)* on page 59.)

Stop copying

To stop copying, press **Stop/Exit**.

Copy options

When you want to quickly change the copy settings *temporarily* for the next multiple copies, use the **Copy Options** key.

Copy Options

The machine returns to its default settings 2 minutes after it finishes copying, or if the mode timer returns the machine to Fax mode. For more information see *Mode Timer* on page 19.

Note

You can save some of the copy settings you use most often by setting them as default. You can find instructions on how to do this in the section for each feature.

Press	Menu selection	Options	Page
Press Copy Options	Quality	Fast Normal Best	56
	Enlarge/ Reduce	47%/69%/83%/93%/ 97%/100%/142%/ 186%/198%/ Fit to Page/ Custom(25-400%)	56
	Paper Type	Plain Paper Inkjet Paper Brother BP71 Other Glossy Transparency	60
	Paper Size	A4 A5 10(W) x 15(H)cm Letter Legal	60
	Brightness	- □□■□□ +	59
	Stack/Sort (MFC-290C only)	Stack Sort	59
	Page Layout	Off(1 in 1) 2 in 1 (P) 2 in 1 (L) 4 in 1 (P) 4 in 1 (L) Poster(3 x 3)	57
	No. of Copies	No. of Copies:01 (01 - 99)	

Changing copy speed and quality

You can choose from a range of quality settings. The default setting is Normal.

To *temporarily* change the quality setting, follow the instructions below:

Press Copy Options and then ▲ or ▼ to choose Quality	Normal	Normal is the recommended mode for ordinary print outs. This produces good copy quality with good copy speed.
	Fast	Fast copy speed and lowest ink consumption. Use to save time printing documents to be proof-read, large documents or many copies.
	Best	Use best mode to copy precise images such as photographs. This provides the highest resolution and the slowest speed.

1. Make sure you are in Copy mode .
2. Load your document.
3. Use the dial pad to enter the number of copies (up to 99).
4. Press **Copy Options** and ▲ or ▼ to choose Quality.
   Press **OK**.
5. Press ▲ or ▼ to choose Fast, Normal or Best quality. Press **OK**.
6. Press **Mono Start** or **Colour Start**.

To change the default setting, follow the instructions below:

1. Press **Menu**, **3**, **1**.

   1.Quality

2. Press ▲ or ▼ to choose Fast, Normal or Best quality. Press **OK**.
3. Press **Stop/Exit**.

Enlarging or reducing the image copied

You can choose an enlargement or reduction ratio. If you choose Fit to Page, your machine will adjust the size automatically to the paper size you set.

Press Copy Options and then ▲ or ▼ to choose Enlarge/Reduce	Fit to Page
	Custom(25-400%)
	198% 10x15cm→A4
	186% 10x15cm→LTR
	142% A5→A4
	100%
	97% LTR→A4
	93% A4→LTR
	83% LGL→A4
	69% A4→A5
	47% A4→10x15cm

To enlarge or reduce the next copy follow the instruction below:

1. Make sure you are in Copy mode .
2. Load your document.
3. Use the dial pad to enter the number of copies (up to 99).
4. Press **Copy Options** and ▲ or ▼ to choose `Enlarge/Reduce`.
   Press **OK**.
5. Do one of the following:
   - Press ▲ or ▼ to choose the enlargement or reduction ratio you want. Press **OK**.
   - Press ▲ or ▼ to choose `Custom(25-400%)`. Press **OK**. Use the dial pad to enter an enlargement or reduction ratio from `25%` to `400%`. (For example, press **5 3** to enter `53%`.) Press **OK**.
6. Press **Mono Start** or **Colour Start**.

Note

- `Enlarge/Reduce` is not available with `Page Layout`.
- `Fit to Page` does not work properly if the document on the scanner glass is skewed by more than 3 degrees. Using the document guide lines on the left and top, place your document in the upper left hand corner, with the document face down on the scanner glass.
- `Fit to Page` is not available for a Legal size document.

Making N in 1 copies or a poster (Page Layout)

The N in 1 copy feature can help you save paper by letting you copy two or four pages onto one printed page.

You can also produce a poster. When you use the poster feature your machine divides your document into sections, then enlarges the sections so you can assemble them into a poster. If you want to print a poster, use the scanner glass.

Important

- Make sure paper size is set to `Letter` or `A4`.
- You cannot use the Enlarge/Reduce and Sort settings (MFC-290C) with the N in 1 and Poster features.
- N in 1 colour copies are not available.
- (`P`) means Portrait and (`L`) means Landscape.
- You can only make one poster copy at a time.

1. Make sure you are in Copy mode .
2. Load your document.
3. Use the dial pad to enter the number of copies (up to 99).
4. Press **Copy Options** and ▲ or ▼ to choose `Page Layout`.
   Press **OK**.
5. Press ▲ or ▼ to choose `Off(1 in 1)`, `2 in 1 (P)`, `2 in 1 (L)`, `4 in 1 (P)`, `4 in 1 (L)` or `Poster(3 x 3)`.
   Press **OK**.

6 Press **Mono Start** to scan the document. You can also press **Colour Start** if you are using Poster layout.
If you placed the document in the ADF (MFC-290C) or are making a poster, the machine scans the pages and starts printing.

If you are using the scanner glass, go to ❼.

7 After the machine scans the page, press **1** to scan the next page.

```
Next Page?
```

```
1.Yes 2.No
```

8 Place the next page on the scanner glass. Press **OK**.
Repeat ❼ and ❽ for each page of the layout.

```
Set Next Page
```

```
Then Press OK
```

9 After all the pages have been scanned, press **2** to finish.

Place your document face down in the direction shown below:

■ **2 in 1 (P)**

■ **2 in 1 (L)**

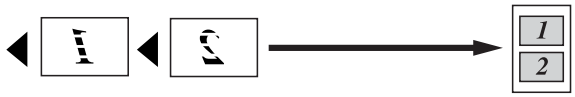

■ **4 in 1 (P)**

■ **4 in 1 (L)**

■ **Poster (3x3)**

You can make a poster size copy of a photograph.

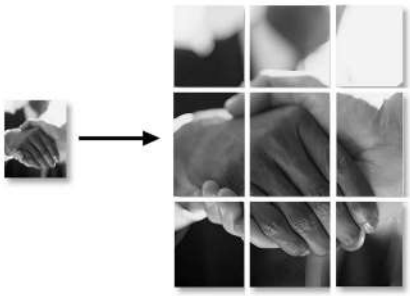

Sorting copies using the ADF (Monochrome only) (MFC-290C only)

You can sort multiple copies. Pages will be sorted in the order 3 2 1, 3 2 1, 3 2 1, and so on.

1. Make sure you are in Copy mode .
2. Load your document.
3. Use the dial pad to enter the number of copies (up to 99).
4. Press **Copy Options** and ▲ or ▼ to choose `Stack/Sort`.
   Press **OK**.
5. Press ▲ or ▼ to choose `Sort`.
   Press **OK**.
6. Press **Mono Start**.

Note

- `Sort` is not available with `Page Layout`.
- `Sort` is not available with `Fit to Page`.

Adjusting Brightness and Contrast

Brightness

To temporarily change the brightness setting, follow the instructions below:

1. Make sure you are in Copy mode .
2. Load your document.
3. Use the dial pad to enter the number of copies (up to 99).
4. Press **Copy Options** and ▲ or ▼ to choose `Brightness`.
   Press **OK**.

   −□□■□□+ ▲▼

5. Press ▲ or ▼ to make a lighter or darker copy. Press **OK**.
6. Press **Mono Start** or **Colour Start**.

To change the default setting follow the instructions below:

1. Press **Menu**, **3**, **2**.
2. Press ▲ or ▼ to make a lighter or darker copy. Press **OK**.
3. Press **Stop/Exit**.

Contrast

Adjust the contrast to help an image look sharper and more vivid.

1. Press **Menu**, **3**, **3**.

   `3.Contrast`

2. Press ▲ or ▼ to change the contrast.
   Press **OK**.
3. Press **Stop/Exit**.

Paper options

Paper Type

If you are copying on special paper, set the machine for the type of paper you are using to get the best print quality.

1. Make sure you are in Copy mode .
2. Load your document.
3. Use the dial pad to enter the number of copies (up to 99).
4. Press **Copy Options** and ▲ or ▼ to choose `Paper Type`.
   Press **OK**.
5. Press ▲ or ▼ to choose the type of paper you are using `Plain Paper`, `Inkjet Paper`, `Brother BP71`, `Other Glossy` or `Transparency`.
   Press **OK**.
6. Press **Mono Start** or **Colour Start**.

Note

To change the default paper type setting see *Paper Type* on page 19.

Paper Size

If copying on paper other than A4 size, you will need to change the paper size setting. You can copy on Letter, Legal, A4, A5 or Photo 10cm × 15cm paper.

1. Make sure you are in Copy mode .
2. Load your document.
3. Use the dial pad to enter the number of copies (up to 99).
4. Press **Copy Options** and ▲ or ▼ to choose `Paper Size`.
   Press **OK**.
5. Press ▲ or ▼ to choose the size of paper you are using `Letter`, `Legal`, `A4`, `A5` or `10(W) x 15(H)cm`.
   Press **OK**.
6. Press **Mono Start** or **Colour Start**.

Note

To change the default paper size setting see *Paper Size* on page 19.

Section IV

Direct Photo Printing

Printing photos from a memory card or USB Flash memory drive 62

Printing photos from a camera 72

11 Printing photos from a memory card or USB Flash memory drive

Note

The MFC-250C only supports USB Flash memory drives.

PhotoCapture Center™ Operations

Printing from a memory card or USB Flash memory drive without a PC

Even if your machine is not connected to your computer, you can print photos directly from digital camera media or USB Flash Memory drive. (See *How to print from a memory card or USB Flash memory drive* on page 65.)

Scanning to a memory card or USB Flash memory drive without a PC

You can scan documents and save them directly to a memory card or USB Flash memory drive. (See *Scan to a memory card or USB Flash memory drive* on page 70.)

Using PhotoCapture Center™ from your computer

You can access a memory card or USB Flash memory drive that is inserted in the front of the machine from your PC.

(See *PhotoCapture Center*™ for Windows® or *Remote Setup* & *PhotoCapture Center*™ for Macintosh® in the Software User's Guide on the CD-ROM.)

Using a memory card or USB Flash memory drive

Your Brother machine has media drives (slots) for use with the following, popular digital camera media: Memory Stick™, Memory Stick PRO™, SD, SDHC, xD-Picture Card™ and a USB Flash memory drive.

Memory Stick™

Memory Stick PRO™

SD, SDHC

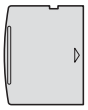

xD-Picture Card™

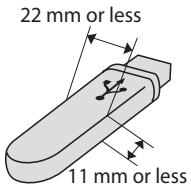

USB Flash memory drive

- miniSD™ can be used with a miniSD™ adapter.
- microSD™ can be used with a microSD™ adapter.
- Memory Stick Duo™ can be used with a Memory Stick Duo™ adapter.
- Memory Stick PRO Duo™ can be used with a Memory Stick PRO Duo™ adapter.
- Memory Stick Micro™(M2™) can be used with a Memory Stick Micro™(M2™) adapter.
- Adapters are not included with the machine. Contact a third party supplier for adapters.

The PhotoCapture Center™ feature lets you print digital photos from your digital camera at high resolution to get photo quality printing.

Memory cards (MFC-290C only) or a USB Flash memory drive folder structure

Your machine is designed to be compatible with modern digital camera image files, memory cards and USB Flash memory drive; however, please read the points below to avoid errors:

- The image file extension must be .JPG (Other image file extensions like .JPEG, .TIF, .GIF and so on will not be recognized).
- PhotoCapture Center™ printing must be performed separately from PhotoCapture Center™ operations using the PC. (Simultaneous operation is not available.)
- IBM Microdrive™ is not compatible with the machine.
- The machine can read up to 999 files (including the folder inside media) on a memory card or USB Flash memory drive.
- This product supports xD-Picture Card™ Type M / Type M+ / Type H (Large Capacity).
- The DPOF file on the memory cards must be in a valid DPOF format. (See *DPOF printing* on page 67.)

Please be aware of the following:

- When printing **Print Index** or **Print Images**, the PhotoCapture Center™ will print all valid images, even if one or more images have been corrupted. Corrupted images will not be printed.
- (memory card users)

  Your machine is designed to read memory cards that have been formatted by a digital camera.

  When a digital camera formats a memory card it creates a special folder into which it copies image data. If you need to modify the image data stored on a memory card with your PC, we recommend that you do not modify the folder structure created by the digital camera. When saving new or modified image files to the memory card we also recommend you use the same folder your digital camera uses. If the data is not saved to the same folder, the machine may not be able to read the file or print the image.
- (USB Flash memory drive users)

  This machine supports USB Flash memory drives that have been formatted by Windows®.

Getting started

Firmly put a memory card or USB Flash memory drive into the correct slot.

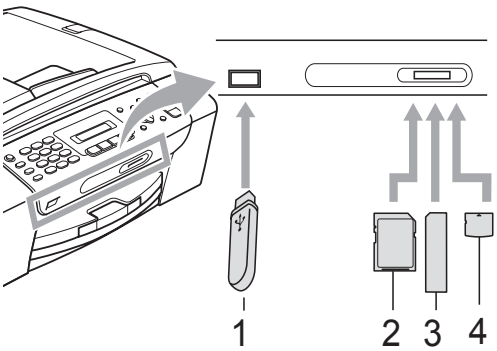

1 **USB Flash memory drive**

2 **SD, SDHC**

3 **Memory Stick™, Memory Stick PRO™**

4 **xD-Picture Card™**

CAUTION

The USB direct interface supports only a USB Flash memory drive, a PictBridge compatible camera, or a digital camera that uses the USB mass storage standard. Any other USB devices are not supported.

The **Photo Capture** key indications

- **Photo Capture** light is on, the memory card or USB Flash memory drive is correctly inserted.
- **Photo Capture** light is off, the memory card or USB Flash memory drive is not correctly inserted.
- **Photo Capture** light is blinking, the memory card or USB Flash memory drive is being read or written to.

CAUTION

DO NOT unplug the power cord or remove the memory card or USB Flash memory drive from the media drive (slot) or USB direct interface while the machine is reading or writing to the memory card or USB Flash memory drive (the **Photo Capture** key is blinking). **You will lose your data or damage the card.**

The machine can only read one device at a time so do not put more than one device in the slots.

How to print from a memory card or USB Flash memory drive

Before printing a photo you must first print a thumbnail index to choose the number of the photo you want to print. Follow the instructions below to start printing directly from your memory card or USB Flash memory drive:

1. Make sure you have put the memory card or USB Flash memory drive in the correct slot. The LCD will show the following message (for example):

   `M.Stick Active`

   `Press PhotoCa...`

2. Press **Photo Capture**. For DPOF printing, see *DPOF printing* on page 67.

3. Press ▲ or ▼ to choose `Print Index`. Press **OK**.

4. Press **Colour Start** to start printing the index sheet. Make a note of the image number you want to print. See *Print Index (Thumbnails)* on page 65.

5. To print images press ▲ or ▼ to choose `Print Images` in ❸ and then press **OK**. (See *Printing Photos* on page 66).

6. Enter the image number and press **OK**.

7. Press **Colour Start** to start printing.

Print Index (Thumbnails)

The PhotoCapture Center™ assigns numbers for images (such as NO.1, NO.2, NO.3, and so on).

The PhotoCapture Center™ uses these numbers to identity each picture. You can print a thumbnail page to show all the pictures on the memory card or USB Flash memory drive.

Note

Only file names that are 8 characters or less will be printed correctly on the index sheet.

1. Make sure you have put the memory card or USB Flash memory drive in the correct slot.

   Press (**Photo Capture**).

2. Press ▲ or ▼ to choose `Print Index`. Press **OK**.

3. Press ▲ or ▼ to choose `6 Images/Line` or `5 Images/Line`. Press **OK**.

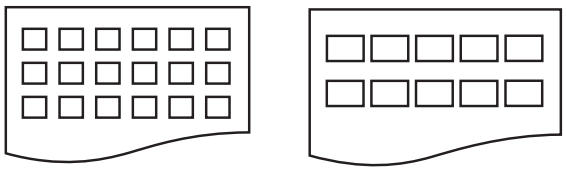

`6 Images/Line` `5 Images/Line`

Print time for `5 Images/Line` will be slower than `6 Images/Line`, but the quality is better.

4 Press ▲ or ▼ to choose the type of paper you are using, `Plain Paper`, `Inkjet Paper`, `Brother BP71` or `Other Glossy`.
Press **OK**.

5 Press ▲ or ▼ to choose the paper size you are using, `A4` or `Letter`.
Press **OK**.

6 Press **Colour Start** to print.

Printing Photos

Before you can print an individual image, you have to know the image number.

1 Make sure you have put the memory card or USB Flash memory drive in the correct slot.

2 Print the index first. (See *Print Index (Thumbnails)* on page 65.)
Press (**Photo Capture**).

3 Press ▲ or ▼ to choose `Print Images`.
Press **OK**.

Note

If your memory card contains valid DPOF information, the LCD will show `DPOF Print:Yes`. See *DPOF printing* on page 67.

4 Enter the image number that you want to print from the thumbnails printed on the Index page.
Press **OK**.

```
No.:1,3,6,
```

Note

- Multiple numbers can be entered by using the **OK** key to separate numbers. For example **1**, **OK**, **3**, **OK**, **6** would print images 1,3 and 6.
  The **#** key can be used to print a range of numbers, for example **1**, **#**, **5** would print all images from 1 to 5.
- You can enter up to 12 characters (including commas) for the image numbers you want to print.

5 Do one of the following:
- After you have chosen all the images you want to print, press **OK** to choose your settings. Go to step ❻.
- If you have already chosen your settings, press **Colour Start**.

6 Press ▲ or ▼ to choose the type of paper you are using, `Plain Paper`, `Inkjet Paper`, `Brother BP71` or `Other Glossy`.
Press **OK**.

7 Press ▲ or ▼ to choose the paper size you are using, `Letter`, `A4`, `10x15cm` or `13x18cm`.
Press **OK**.
- If you choose Letter or A4, go to ❽.
- If you choose another size, go to ❾.
- If you have finished choosing settings, press **Colour Start**.

8 Press ▲ or ▼ to choose the print size (`8 x 10cm`, `9 x 13cm`, `10 x 15cm`, `13 x 18cm`, `15 x 20cm` or `Max. Size`).
Press **OK**.

9 Do one of the following:
- To choose the number of copies go to ❿.
- If you have finished choosing settings, press **Colour Start**.

10 Enter the number of copies you want. Press **OK**.

11 Press **Colour Start** to print.

The printing positions when using A4 are shown below.

1 8 x 10cm	2 9 x 13cm	3 10 x 15cm
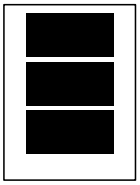	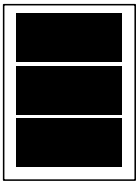	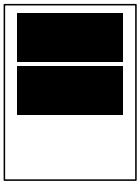
4 13 x 18cm	5 15 x 20cm	6 Max. Size
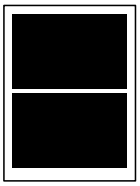	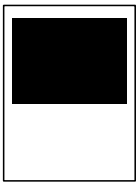	

DPOF printing

DPOF stands for Digital Print Order Format.

Major digital camera manufacturers (Canon Inc., Eastman Kodak Company, FUJIFILM Corporation, Panasonic Corporation and Sony Corporation) created this standard to make it easier to print images from a digital camera.

If your digital camera supports DPOF printing, you will be able to choose on the digital camera display the images and number of copies you want to print.

When a memory card containing DPOF information is put into your machine, you can print the chosen image easily.

1 Firmly insert the memory card into the correct slot.

`M.Stick Active`

Press (**Photo Capture**).

2 Press ▲ or ▼ to choose `Print Images`. Press **OK**.

3 If there is a DPOF file on the card, the LCD will show:

`DPOF Print:Yes`

The DPOF file on the memory card must be in a valid DPOF format.

4 Press ▲ or ▼ to choose `DPOF Print:Yes`. Press **OK**.

5 Press ▲ or ▼ to choose the type of paper you are using, `Plain Paper`, `Inkjet Paper`, `Brother BP71` or `Other Glossy`.
Press **OK**.

6 Press ▲ or ▼ to choose the paper size you are using, `Letter`, `A4`, `10x15cm` or `13x18cm`.
Press **OK**.

- If you chose Letter or A4, go to ❼.
- If you chose another size, go to ❽.

7 Press ▲ or ▼ to choose the print size (`8 x 10cm`, `9 x 13cm`, `10 x 15cm`, `13 x 18cm`, `15 x 20cm` or `Max. Size`).
Press **OK**.

8 Press **Colour Start** to print.

Note

An Invalid DPOF File error can occur if the print order that was created on the camera has been corrupted. Delete and recreate the print order using your camera to correct this problem.

For instructions on how to delete or recreate the print order, refer to your camera manufactures support website or accompanying documentation.

PhotoCapture Center™ print settings

These settings will remain until you change them again.

Print speed and quality

1. Press **Menu**, **4**, **1**.
2. Press ▲ or ▼ to choose `Normal` or `Photo`.
   Press **OK**.
3. Press **Stop/Exit**.

Paper Options

Paper Type

1. Press **Menu**, **4**, **2**.
2. Press ▲ or ▼ to choose `Plain Paper`, `Inkjet Paper`, `Brother BP71` or `Other Glossy`.
   Press **OK**.
3. Press **Stop/Exit**.

Paper Size

1. Press **Menu**, **4**, **3**.
2. Press ▲ or ▼ to choose the paper size you are using, `Letter`, `A4`, `10x15cm` or `13x18cm`.
   Press **OK**.
3. Press **Stop/Exit**.

Print Size

This setting is available only when you choose Letter or A4 in the paper size setting.

1. Press **Menu**, **4**, **4**.
2. Press ▲ or ▼ to choose the print size you are using, `8 x 10cm`, `9 x 13cm`, `10 x 15cm`, `13 x 18cm`, `15 x 20cm` or `Max. Size`.
   Press **OK**.
3. Press **Stop/Exit**.

Adjusting Brightness and Contrast

Brightness

1. Press **Menu**, **4**, **5**.
2. Press ▲ or ▼ to make a lighter or darker print.
   Press **OK**.
3. Press **Stop/Exit**.

Contrast

You can choose the contrast setting. More contrast will make an image look sharper and more vivid.

1. Press **Menu**, **4**, **6**.
2. Press ▲ or ▼ to increase or decrease the contrast.
   Press **OK**.
3. Press **Stop/Exit**.

Cropping

If your photo is too long or wide to fit the available space on your chosen layout, part of the image will be automatically cropped.

The default setting is `On`. If you want to print the whole image, turn this setting to `Off`. If you are also using the Borderless setting, turn `Borderless` to `Off`. (See *Borderless printing* on page 69.)

1. Press **Menu**, **4**, **7**.
2. Press ▲ or ▼ to choose `Off` (or `On`). Press **OK**.
3. Press **Stop/Exit**.

Cropping: On

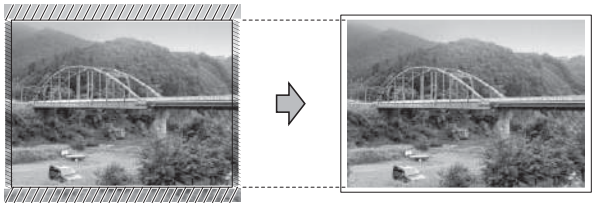

Cropping: Off

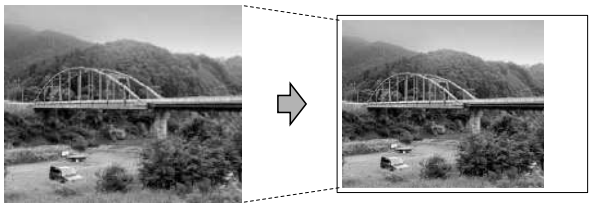

Borderless printing

This feature expands the printable area to the edges of the paper. Printing time will be slightly slower.

1. Press **Menu**, **4**, **8**.
2. Press ▲ or ▼ to choose `Off` (or `On`). Press **OK**.
3. Press **Stop/Exit**.

Date Print

You can print the date if it is already in the data on your photo. The date will be printed on the lower right corner. If the data doesn't have the date information, you cannot use this function.

1. Press **Menu**, **4**, **9**.
2. Press ▲ or ▼ to choose `On` (or `Off`). Press **OK**.
3. Press **Stop/Exit**.

Note

The DPOF setting on your camera must be turned off to use the Date Print.

Scan to a memory card or USB Flash memory drive

You can scan monochrome and colour documents onto a memory card or USB Flash memory drive. Monochrome documents will be stored in PDF (*.PDF) or TIFF (*.TIF) file formats. Colour documents may be stored in PDF (*.PDF) or JPEG (*.JPG) file formats. The default setting is `Color 150 dpi` and the default file format is PDF. The machine automatically creates file names based on the current date. (For details, see the Quick Setup Guide.) For example, the fifth image scanned on July 1, 2009 would be named 01070905.PDF. You can change the colour and quality.

Quality	Selectable File Format
`Color 150 dpi`	`JPEG / PDF`
`Color 300 dpi`	`JPEG / PDF`
`Color 600 dpi`	`JPEG / PDF`
`B/W 200x100 dpi`	`TIFF / PDF`
`B/W 200 dpi`	`TIFF / PDF`

1. Insert a Memory Stick™, Memory Stick PRO™, SD, SDHC, xD-Picture Card™ or USB Flash memory drive into your machine.

WARNING

DO NOT take out the memory card or USB Flash memory drive while **Photo Capture** is blinking to avoid damaging the card or USB Flash memory drive or the data stored on them.

2. Load your document.
3. Press [Scan] (**Scan**).
4. Press ▲ or ▼ to choose `Scan to Media`, do one of the following:
   - To change the quality press **OK** and go to step ❺.
   - To start scanning press **Mono Start** or **Colour Start**.
5. Press ▲ or ▼ to choose the quality, and then press **OK**.

   Do one of the following:
   - To change the file type, go to step ❻.
   - To start scanning press **Mono Start** or **Colour Start**.
6. Press ▲ or ▼ to choose the file type and then press **OK**.
   Press **Mono Start** or **Colour Start**.

Changing the image quality

1. Press **Menu**, **4**, **0**, **1**.
2. Press ▲ or ▼ to choose `B/W 200x100 dpi`, `B/W 200 dpi`, `Color 150 dpi`, `Color 300 dpi` or `Color 600 dpi`.
   Press **OK**.
3. Press **Stop/Exit**.

Changing the monochrome file format

1. Press **Menu**, **4**, **0**, **2**.
2. Press ▲ or ▼ to choose `TIFF` or `PDF`. Press **OK**.
3. Press **Stop/Exit**.

Changing the colour file format

1. Press **Menu**, **4**, **0**, **3**.
2. Press ▲ or ▼ to choose `JPEG` or `PDF`. Press **OK**.
3. Press **Stop/Exit**.

Understanding the Error Messages

Once you are familiar with the types of errors that can occur while you are using PhotoCapture Center™, you can easily identify and troubleshoot any problems.

- `Hub is Unusable.`

  This message will appear if a Hub or USB Flash memory drive with a Hub has been put into the USB direct interface.

- `Media Error`

  This message will appear if you put in a memory card that is either bad or not formatted, or when there is a problem with the media drive. To clear this error, take out the memory card.

- `No File`

  This message will appear if you try to access a memory card or USB Flash memory drive in the drive (slot) that does not contain a .JPG file.

- `Out of Memory`

  This message will appear if you are working with images that are too large for the machine's memory.

- `Media is Full.`

  This message will appear if you are trying to save more than 999 files in a memory card or USB Flash memory drive.

- `Unusable Device`

  This message will appear if a USB device or USB Flash memory drive that is not supported has been connected to the USB direct interface. (For more information, visit us at http://solutions.brother.com.) This message will also appear if you connect a broken device to the USB direct interface.

12 Printing photos from a camera

Printing photos directly from a PictBridge camera

Your Brother machine supports the PictBridge standard, allowing you to connect to and print photos directly from any PictBridge compatible digital camera.

If your camera is using the USB Mass Storage standard, you can also print photos from a digital camera without PictBridge. (See *Printing photos directly from a digital camera (without PictBridge)* on page 74.)

PictBridge requirements

To avoid errors, remember the following points:

- The machine and the digital camera must be connected using a suitable USB cable.
- The image file extension must be .JPG (other image file extensions like .JPEG, .TIF, .GIF and so on will not be recognized).
- PhotoCapture Center™ operations are not available when using the PictBridge feature.

Setting your digital camera

Make sure your camera is in PictBridge mode. The following PictBridge settings may be available from the LCD of your PictBridge compatible camera.

Depending on your camera some of these settings may not be available.

Camera Menu Selections	Options
Paper Size	Letter, A4, 10×15cm, Printer Settings (Default setting) [2]
Paper Type	Plain Paper, Glossy Paper, Inkjet Paper, Printer Settings (Default setting) [2]
Layout	Borderless: On, Borderless: Off, Printer Settings (Default setting) [2]
DPOF setting [1]	-
Print Quality	Normal, Fine, Printer Settings (Default setting) [2]
Date Print	On, Off, Printer Settings (Default setting) [2]

[1] See *DPOF printing* on page 73 for more details.

[2] If your camera is set to use the Printer Settings (Default setting), the machine will print your photo using the following settings.

Settings	Options
Paper Size	10×15cm
Paper Type	Other Glossy
Layout	Borderless: On
Print Quality	Photo
Date Print	Off

- When your camera does not have any menu selections, those settings are also used.
- The names and availability of each setting depends on the specification of your camera.

Please refer to the documentation supplied with your camera for more detailed information on changing PictBridge settings.

Printing Images

Note

Remove any memory cards or USB Flash memory drive from the machine before connecting a digital camera.

1. Make sure that your camera is turned off. Connect your camera to the USB direct interface (1) on the machine using the USB cable.

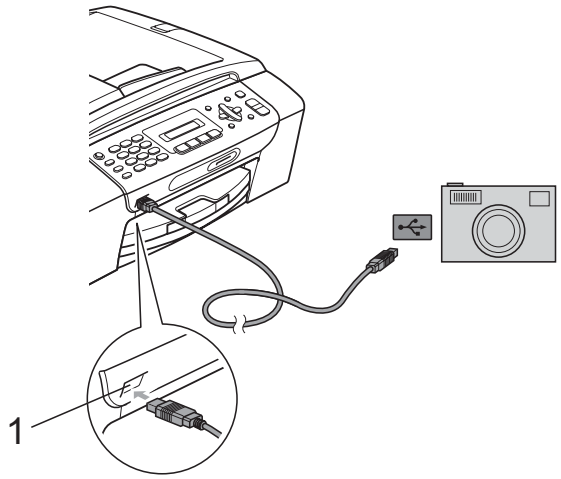

1 USB direct interface

2. Turn on the camera.
When the machine has recognized the camera, the LCD shows the following message:

`Camera Connected`

3. Choose the photo you want to print following the instructions from your camera.
When the machine starts printing a photo, the LCD will show `Printing`.

CAUTION

To prevent damage to your machine, do not connect any device other than a digital camera or USB Flash memory drive to the USB direct interface.

DPOF printing

DPOF stands for Digital Print Order Format.

Major digital camera manufacturers (Canon Inc., Eastman Kodak Company, FUJIFILM Corporation, Panasonic Corporation and Sony Corporation) created this standard to make it easier to print images from a digital camera.

If your digital camera supports DPOF printing, you will be able to choose on the digital camera display the images and number of copies you want to print.

Note

An Invalid DPOF File error can occur if the print order that was created on the camera has been corrupted. Delete and recreate the print order using your camera to correct this problem. For instructions on how to delete or recreate the print order, refer to your camera manufacturer's support website or accompanying documentation.

Printing photos directly from a digital camera (without PictBridge)

If your camera supports the USB Mass Storage standard, you can connect your camera in storage mode. This enables you to print photos from your camera.

(If you would like to print photos in PictBridge mode, see *Printing photos directly from a PictBridge camera* on page 72.)

Note

The name, availability and operation differ among digital cameras. Please refer to the documentation supplied with your camera for detailed information, such as how to switch from PictBridge mode to USB mass storage mode.

Printing Images

Note

Remove any memory cards or USB Flash memory drive from the machine before connecting a digital camera.

1. Make sure that your camera is turned off. Connect your camera to the USB direct interface (1) on the machine using the USB cable.

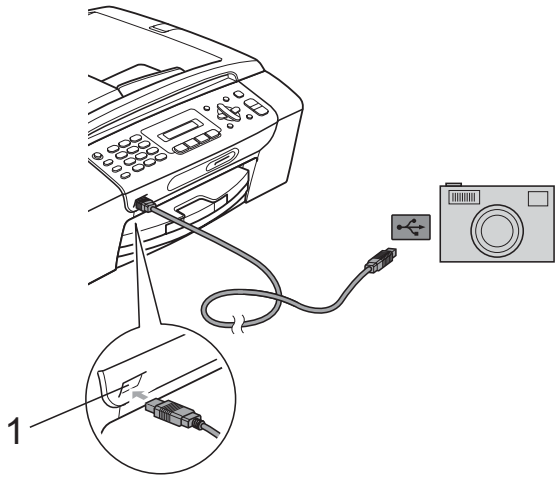

1 USB direct interface

2. Turn on the camera.
3. Follow the steps in *Printing Photos* on page 66.

CAUTION

To prevent damage to your machine, do not connect any device other than a digital camera or USB Flash memory drive to the USB direct interface.

Understanding the Error Messages

Once you are familiar with the types of errors that can occur while you are printing from a camera, you can easily identify and troubleshoot any problems.

- `Out of Memory`

  This message will appear if you are working with images that are too large for the machine's memory.

- `Unusable Device`

  This message will appear if you connect a camera which is not using the USB Mass Storage standard. This message will also appear if you connect a broken device to the USB direct interface.

(For more detailed solutions see *Error and maintenance messages* on page 101.)

Section V

Software

Software features 78

13 Software features

The CD-ROM includes the Software User's Guide for features available when connected to a computer (for example, printing and scanning). The guide has easy to use links that, when clicked, will take you directly to a particular section.

You can find information on these features:

- Printing
- Scanning
- ControlCenter3 (for Windows®)
- ControlCenter2 (for Macintosh®)
- Faxing from your computer
- PhotoCapture Center™

How to read the HTML User's Guide

This is a quick reference to use the HTML User's Guide.

For Windows®

Note

If you have not installed the software, see *Viewing Documentation* on page 3.

1. From the **Start** menu, point to **Brother**, **MFC-XXXX** (where **XXXX** is your model number) from the programs group, then click **User's Guides in HTML format**.
2. Click **SOFTWARE USER'S GUIDE** from the top menu.

3. Click the heading you would like to read from the list at the left of the window.

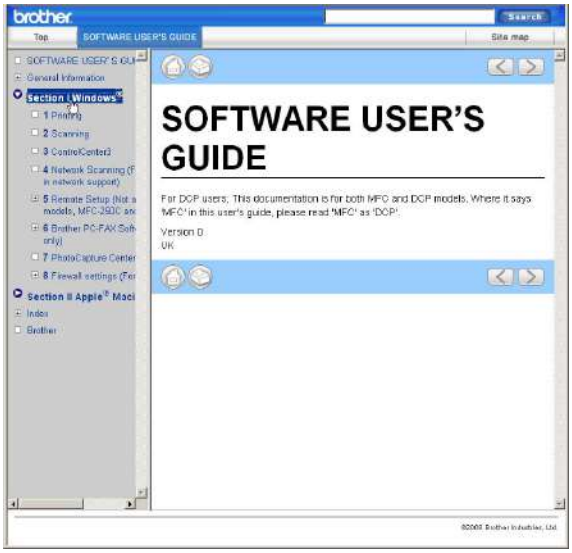

For Macintosh®

1. Make sure your Macintosh® is turned on. Insert the Brother CD-ROM into your CD-ROM drive.
2. Double-click the **Documentation** icon.
3. Double-click your language folder, and then double-click top.html.
4. Click **SOFTWARE USER'S GUIDE** in the top menu, and then click the heading you would like to read from the list at the left of the window.

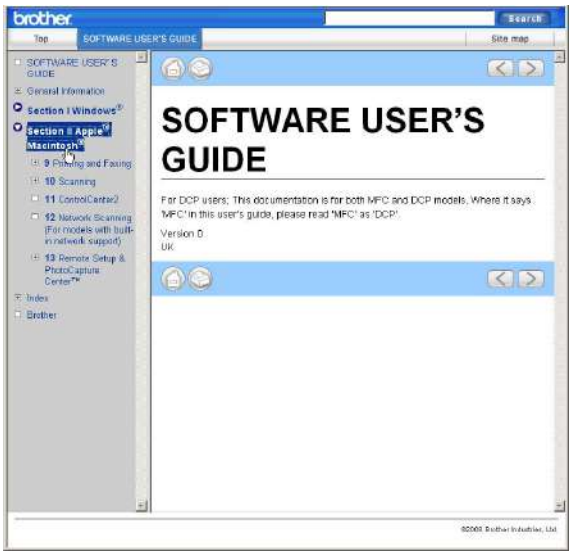

Section VI

Appendixes

Safety and Legal	80
Troubleshooting and Routine Maintenance	95
Menu and Features	119
Specifications	128
Glossary	141

A Safety and Legal

Choosing a location

Put your machine on a flat, stable surface that is free of vibration and shocks, such as a desk. Put the machine near a telephone socket and a standard, grounded electrical socket. Choose a location where the temperature remains between 10° C and 35° C.

WARNING

DO NOT put the machine near heaters, air conditioners, refrigerators, medical equipment, chemicals or water.

DO NOT connect your machine to electrical sockets on the same circuit as large appliances or other equipment that might disrupt the power supply.

CAUTION

- Avoid placing your machine in a high-traffic area.
- Avoid placing your machine on a carpet.
- DO NOT expose the machine to direct sunlight, excessive heat, moisture, or dust.
- DO NOT connect your machine to electrical sockets controlled by wall switches or automatic timers.
- Disruption of power can wipe out information in the machine's memory.
- Avoid interference sources, such as other cordless telephone systems or speakers.
- DO NOT tip the machine, or place it on any tilted surface. Doing this may cause ink spillage and internal damage to your machine.

To use the machine safely

Please keep these instructions for later reference and read them before attempting any maintenance.

WARNING

There are high voltage electrodes inside the machine. Before you clean the inside of the machine, make sure you have unplugged the telephone line cord first and then the power cord from the electrical socket. Doing this will prevent an electrical shock.

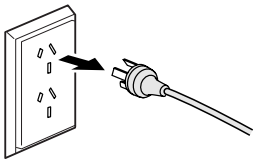

DO NOT handle the plug with wet hands. Doing this might cause an electrical shock.

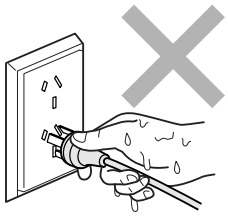

DO NOT pull on the middle of the AC power cord. Doing this might cause an electrical shock.

DO NOT put your hands on the edge of the machine under the document cover or the scanner cover. Doing this may cause injury.

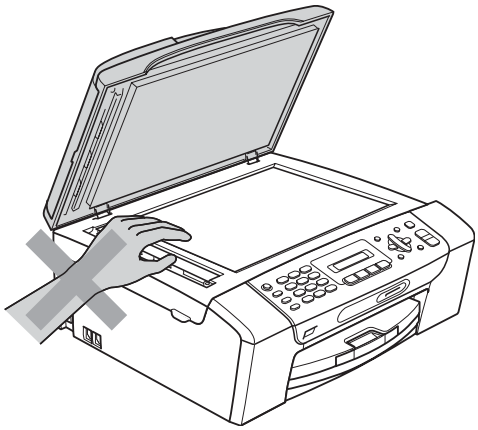

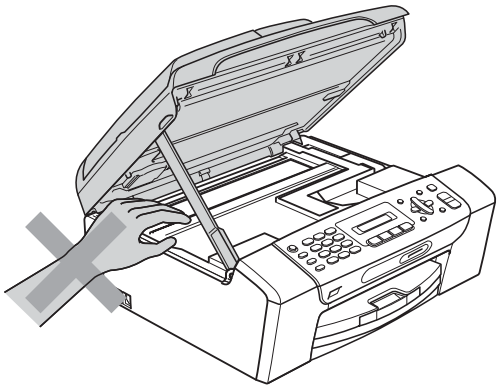

DO NOT put your hands on the edge of the paper tray under the paper tray cover. Doing this may cause injury.

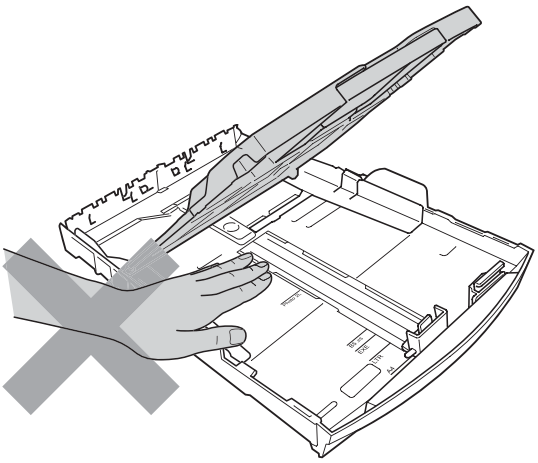

DO NOT touch the area shaded in the illustration. Doing this may cause injury.

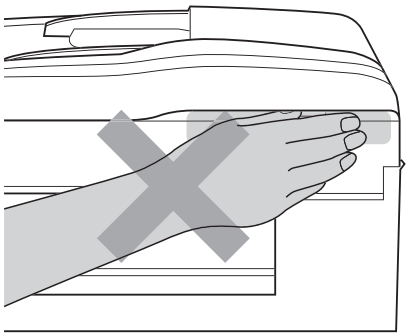

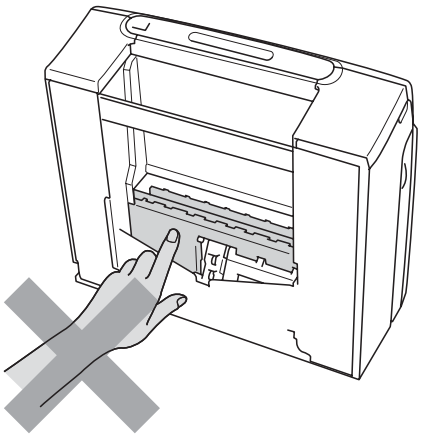

When moving the machine you must lift it from the base, by placing a hand at each side of the unit as shown in the illustration. DO NOT carry the machine by holding the scanner cover or the Jam Clear Cover.

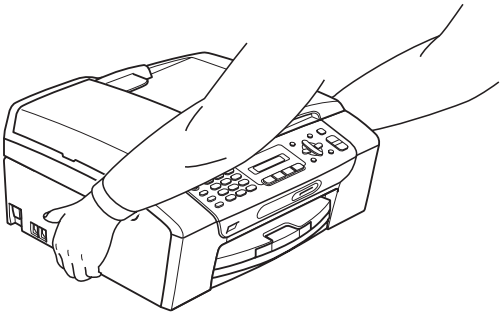

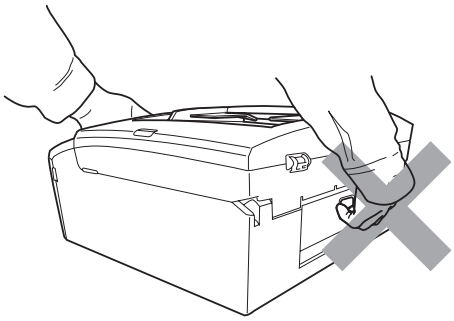

DO NOT use flammable substances, any type of spray, liquid or aerosol cleaners to clean the inside or outside of the machine. Doing this may cause a fire or electrical shock.

If the machine becomes hot, releases smoke, or generates any strong smells, immediately unplug the machine from the electrical socket. Call your Brother dealer or Brother Customer Service.

If metal objects, water or other liquids get inside the machine, immediately unplug the machine from the electrical socket. Call your Brother dealer or Brother Customer Service.

Use caution when installing or modifying telephone lines. Never touch telephone wires or terminals that are not insulated unless the telephone line has been unplugged at the wall socket. Never install telephone wiring during a lightning storm. Never install a telephone wall socket in a wet location.

This product must be installed near an electrical socket that is easily accessible. In case of an emergency, you must unplug the power cord from the electrical socket to shut off the power completely.

This product should be connected to an AC power source within the range indicated on the rating label. DO NOT connect it to a DC power source or inverter. If you are not sure, contact a qualified electrician.

Always make sure the plug is fully inserted.

DO NOT use the machine if the power cord is frayed or damaged, doing so may cause a fire.

When using your telephone equipment, basic safety precautions should always be followed to reduce the risk of fire, electric shock and injury to people, including the following:

1 DO NOT use this product near water, for example, near a bath tub, wash bowl, kitchen sink or washing machine, in a wet basement or near a swimming pool.

2 Avoid using this product during an electrical storm. There may be a remote risk of electric shock from lightning.

3 DO NOT use this product to report a gas leak in the vicinity of the leak.

4 DO NOT dispose of batteries in a fire. They may explode. Check with local codes for possible special disposal instructions.

IMPORTANT-For Your Safety

To ensure safe operation the two-pin plug or the three-pin plug supplied must be inserted only into a standard two-pin power point or three-pin power point which is effectively grounded through the normal household wiring.

Extension cords used with the equipment must be two-condoctor or three-conductor and be correctly wired to provide connection to ground. Incorrectly wired extension cords are a major cause of fatalities.

The fact that the equipment operates satisfactorily does not imply that the power is grounded and that the installation is completely safe. For your safety, if in any doubt about the effective grounding of the power, consult a qualified electrician.

Disconnect device

This product must be installed near an electrical socket that is easily accessible. In case of emergencies, you must disconnect the power cord from the electrical socket to shut off power completely.

Important Information for Australia

Important safety instructions

1 Read all of these instructions.

2 Save them for later reference.

3 Follow all warnings and instructions marked on the product.

4 Unplug this product from the wall socket before cleaning the outside of the machine and the scanner glass. Do not use liquid or aerosol cleaners. Use a damp cloth for cleaning.

5 Do not use this product near water.

6 Do not place this product on an unstable cart, stand, or table. The product may fall, causing serious damage to the product.

7 Slots and openings in the cabinet and the back or bottom are provided for ventilation; to ensure reliable operation of the product and to protect it from overheating, these openings must not be blocked or covered. The openings should never be blocked by placing the product on a bed, sofa, rug, or other similar surface. This product should never be placed near or over a radiator or heater. This product should never be placed in a built-in installation unless adequate ventilation is provided.

8 This product should be connected to an AC power source within the range indicated on the rating label. Do NOT connect it to a DC power source. If you are not sure, contact a qualified electrician.

9 This product is equipped with a 3-wire grounded plug, a plug having a third (grounded) pin. This plug will only fit into a grounded power outlet. This is a safety feature. If you are unable to insert the plug into the outlet, call your electrician to replace your obsolete outlet. Do not defeat the purpose of the grounded plug.

10 Do not place anything on top of the power cord including this machine. Do not allow the power cord to be stepped on.

11 Do not place anything in front of the machine that will block received faxes. Do not place anything in the path of received faxes.

12 Do not touch a document during printing.

13 Never push objects of any kind into this product through cabinet slots, since they may touch dangerous voltage points or short out parts resulting in a risk of fire or electric shock. Never spill liquid of any kind on the product.

14 Do not attempt to service this product yourself, because opening or removing covers may expose you to dangerous voltage points and/or other risks. Refer all servicing to service personnel.

15 Wait until pages have exited the machine before picking them up.

16 Unplug this product from the electrical socket and refer servicing to Authorized Service Personnel under the following conditions:

- When the power cord is damaged or frayed.
- If liquid has been spilled into the product.
- If the product has been exposed to rain or water.
- If the product does not operate normally when the operating instructions are followed. Adjust only those controls that are covered by the operating instructions. Improper adjustment of other controls may result in damage and will often require extensive work by a qualified technician to restore the product to normal operation.
- If the product has been dropped or the cabinet has been damaged.
- If the product exhibits a distinct change in performance, indicating a need for service.

17 Small metallic objects such as pins and staples may be attracted to the phone's earpiece.

Important Information for New Zealand

Important Safety Instructions

1 Read all of these instructions.

2 Save them for later reference.

3 Follow all warnings and instructions marked on the product.

4 Unplug this product from the wall outlet before cleaning the outside of the machine. Do not use liquid or aerosol cleaners. Use a damp cloth for cleaning.

5 The grant of a Telepermit for any item of terminal equipment indicates only that Telecom has accepted that the item complies with minimum conditions for connection to its network. It indicates no endorsement of the product by Telecom, nor does it provide any sort of warranty. Above all, it provides no assurance that any item will work correctly in all respects with another item of Telepermitted equipment of a different make or model, nor does it imply that any product is compatible with all of Telecom's network services.

6 This equipment does not fully meet Telecom's impedance requirements. Performance limitations may occur when used in conjunction with some parts of the network. Telecom will accept no responsibility should difficulties arise in such circumstances.

7 If a charge for local calls is acceptable, the "Dial Button" should not be used for local calls. Only the 7-digits of the local number should be dialled from your telephone. Do not dial the area code digit or the "0 " prefix.

8 This equipment shall not be set to make automatic calls to the Telecom '111 ' Emergency Service.

9 This equipment should not be used under any circumstances which may constitute a nuisance to other Telecom customers.

10 Not all telephones will respond to incoming ringing when connected to the extension socket.

11 The answer delay setting of this equipment shall not be set to less than the default setting as this will destroy Caller ID information.

12 All persons using this device for recording telephone conversations shall comply with New Zealand law. This requires that at least one party to the conversation is to be aware that it is being recorded. In addition, the Principles enumerated in the Privacy Act 1993 shall be complied with in respect to the nature of the personal information collected, the purpose for its collection, how it is to be used and what it disclosed to any other party.

13 Do not place this product on an unstable surface, stand, or table. The product may fall, causing serious damage to the product.

14 Slots and openings in the cabinet and the back or bottom are provided for ventilation; to ensure reliable operation of the product and to protect it from overheating, these openings must not be blocked or covered. The openings should never be blocked by placing the product on a bed, sofa, rug, or other similar surface. This product should never be placed near or over a radiator or heater. This product should not be placed in a built-in installation unless proper ventilation is provided.

15 This product should be connected to an AC power source within the range indicated on the rating label. Do NOT connect it to a DC power source. If you are not sure, contact a qualified electrician.

16 This product is equipped with a 3-wire earthed plug. This plug will fit into only an earthed socket. This is a safety feature. If you are unable to insert the plug into the outlet, contact your electrician to replace your obsolete socket. Do not defeat the purpose of an earthed plug.

17 Do not place anything on top of the power cord including this machine. Do not allow the power cord to be stepped on.

18 Do not place anything in front of the machine that will block received faxes. Do not place anything in the path of received faxes.

19 Do not touch a document during printing.

20 Never push objects of any kind into this product through cabinet slots, since they may touch dangerous voltage points or short out parts resulting in a risk of fire or electric shock. Never spill liquid of any kind on the product.

21 Do not attempt to service this product yourself, because opening or removing covers may expose you to dangerous voltage points and/or other risks. Refer all servicing to service personnel.

22 Unplug this product from the mains power and telephone line sockets, and refer servicing to qualified Service Personnel under the following conditions:

- If the power cord is damaged or frayed.
- If liquid has been spilled into the product.
- If the product has been exposed to rain or water.
- If the product does not operate normally when the operating instructions are followed. Adjust only those controls that are covered by the operating instructions. Incorrect adjustment of other controls may result in damage and will often require extensive work by a qualified technician to restore the product to normal operation.
- If the product has been dropped or the cabinet has been damaged.
- If the product exhibits a distinct change in performance, indicating a need for service.

23 This unit will only work in conjunction with a tone signalling (DTMF) telephone, but some telephones are not compatible. Since noise or speech from the telephone can upset dialling from this unit, errors may result if the devices are used together in other than quiet conditions.

24 Where it is necessary to dial prefix digits, such as a Caller Display override code (“0196 ” or “0197 ”), this unit will have to be used in conjunction with an associated tone signalling (DTMF) telephone.

25 Note that some telephones are not compatible with this unit and dialling errors may result if the two devices are used together in other than quiet conditions. The Telecom Faults Service is not to be called should such problems arise. In such cases, it is recommended that the prefix and wanted number are dialled manually.

26 This equipment may not provide for the effective hand-over of a call to another device connected to the same line.

27 This equipment is not capable, under all operating conditions, of correct operation at the higher speeds for which it is designed. Telecom will accept no responsibility should difficulties arise in such circumstances. This condition typically applies to 56 kbit/s modems and facsimile machines operating at >14.4 kbit/s.

28 When using the Caller Line Identification incorporated in this device, verify the integrity of the recorded digits prior to dialling.

29 Some parameters required for compliance with Telecom’s Telepermit requirements are dependent on the equipment (PC) associated with this device. The associated equipment shall be set to operate within the following limits for compliance with Telecom’s Specifications:

- There shall be no more than 10 call attempts to the same number within any 30 minute period for any single manual call initiation.
- The equipment shall go on-hook for a period of not less than 30 seconds between the end of one attempt and the beginning of the next call attempt.
- Automatic calls to different numbers are spaced such that there is not less than 5 seconds between the end of one call attempt and the beginning of another.
- Equipment shall be set to ensure that calls are answered within 3 and 30 seconds of the receipt of ringing.

30 In the event of any problem with this device, it is to be disconnected, and a CPE item connected to one of its terminal ports may be connected directly in its place.
The user should then arrange for the product to be repaired. Should the matter be reported to Telecom as a wiring fault and the fault is proven to be due to this product, a call out charge will be incurred by the customer.

31 The Caller ID telephone numbers that are displayed and stored in this equipment include the caller’s area code but not the toll access “0” prefix. When calling back it is necessary to add a “0” to the telephone number, or if the telephone number is a local number, omit the area code digit. If the toll services of a service provider other than Telecom are being used then a toll charge may be incurred if the “0” prefix toll access code and area code are used.

Important Information for Some Countries

Important Safety Instructions

1 Read all of these instructions.

2 Save them for later reference.

3 Follow all warnings and instructions marked on the product.

4 Unplug this product from the wall outlet before cleaning the outside of the machine and the scanner glass. Do not use liquid or aerosol cleaners. Use a damp cloth for cleaning.

5 Do not place this product near water.

6 Do not place this product on an unstable cart, stand, or table. The product may drop, causing serious damage to the product.

7 Slots and openings in the cabinet and the back or bottom are provided for ventilation; to ensure reliable operation of the product and to protect it from overheating, these openings must not be blocked or covered. The openings should never be blocked by placing the product on a bed, sofa, rug, or other similar surface. This product should never be placed near or on a radiator or heater. This product should never be placed in a built-in installation unless proper ventilation is provided.

8 This product should be connected to an AC power source within the range indicated on the rating label. Do NOT connect it to a DC power source. If you are not sure, contact a qualified electrician.

9 This product is equipped with a 2-wire grounding type plug or a 3-wire grounding type plug (Only for Singapore, Malaysia, Hong Kong and India), a plug having two or three pins. This plug will only fit into only a grounding-type power outlet. This is a safety feature. If you are unable to insert the plug into the outlet, contact your electrician to replace your obsolete outlet. Do not defeat the purpose of the grounding-type plug.

10 Do not place anything on top of the power cord including this machine. Do not allow the power cord to be stepped on.

11 If an extension cord is used with this product, make sure that the total ampere ratings on the products plugged into the extension cord do not exceed the extension cord ampere rating.

12 Do not place anything in front of the machine that will block received faxes. Do not place anything in the path of received faxes.

13 Do not touch a document during printing.

14 Never push objects of any kind into this product through cabinet slots, since they may touch dangerous voltage points or short out parts resulting in the risk of fire or electric shock. Never spill liquid of any kind on the product.

15 Do not attempt to service this product yourself, as opening or removing covers may expose you to dangerous voltage points and/or other risks, and may void your warranty. Please refer all servicing to our Authorized Service Personnel. A list of Authorized Service Centres has been included for your convenience, or you may contact the Brother Dealer for Service.

16 Unplug this product from the wall outlet and refer servicing to Authorized Service Personnel under the following conditions:

- If the power cord is damaged or frayed.
- If the product has been spilled by liquid.
- If the product has been exposed to rain or water.
- If the product does not operate normally when the operating instructions are followed. Adjust only those controls that are covered by the operating instructions. Improper adjustment of other controls may result in damage and will often require extensive work by a qualified technician to restore the product to normal operation.
- If the product has been dropped or the cabinet has been damaged.
- If the product exhibits a distinct change in performance, indicating a need for service.

17 To protect your product against power surges, we recommend the use of a power protection device (Surge Protector).

WARNING

For protection against the risk of electrical shock, always disconnect all cables from the wall outlet before servicing, modifying or installing the equipment.

This equipment may not be used on coin service lines provided by the telephone company or connected to party lines.

Brother cannot accept any financial or other responsibilities that may be the result of your use of this information, including direct, special or consequential damages. There are no warranties extended or granted by this document.

Radio interference

This product complies with EN55022 (CISPR Publication 22) /Class B. When connecting the machine to a computer, ensure that you use a USB cable which does not exceed 2.0 meters in length.

International ENERGY STAR® Compliance Statement

The purpose of the International ENERGY STAR® Program is to promote the development and popularization of energy-efficient office equipment.

As an ENERGY STAR® Partner, Brother Industries, Ltd. has determined that this product meets the ENERGY STAR® guidelines for energy efficiency.

Legal limitations for copying

It is an offence to make reproductions of certain items or documents with the intent to commit fraud. This memorandum is intended to be a guide rather than a complete list.We suggest you check with relevant legal authorities if in doubt about a particular item or document.

The following are examples of documents which should not be copied:

- Money
- Bonds or other certificates of debt
- Certificates of Deposit
- Armed Forces Service or Draft papers.
- Passports
- Postage Stamps (cancelled or uncancelled)
- Immigration Papers
- Welfare documents
- Cheques or Drafts drawn by Governmental Agencies
- Identification Documents, badges or insignias

Copyrighted works cannot be copied. Sections of a copyrighted work can be copied for ‘fair dealing’. Multiple copies would indicate improper use.

Works of art should be considered the equivalent of copyrighted works.

Licenses and Certificates of Title to motor vehicles may not be copied under certain state/provincial laws.

Trademarks

The Brother logo is a registered trademark of Brother Industries, Ltd.

Brother is a registered trademark of Brother Industries, Ltd.

Multi-Function Link is a registered trademark of Brother International Corporation.

© 2008 Brother Industries, Ltd. All rights reserved.

Windows Vista is either a registered trademark or a trademark of Microsoft Corporation in the United States and other countries.

Microsoft, Windows and Windows Server are registered trademarks of Microsoft Corporation in the United States and/or other countries.

Macintosh and TrueType are registered trademarks of Apple Inc.

Adobe, Flash, Illustrator, PageMaker and Photoshop are either registered trademarks or trademarks of Adobe Systems Incorporated in the United States and/or other countries.

Nuance, the Nuance logo, PaperPort and ScanSoft are trademarks or registered trademarks of Nuance Communications, Inc. or its affiliates in the United States and/or other countries.

Microdrive is a trademark of International Business Machines Corporation.

Memory Stick is a trademark of Sony Corporation.

SanDisk is a licensee of the SD and miniSD trademarks.

xD-Picture Card is a trademark of FUJIFILM Corporation, Toshiba Corporation and Olympus Optical Co. Ltd.

PictBridge is a trademark.

Memory Stick PRO, Memory Stick PRO Duo, Memory Stick Duo, MagicGate Memory Stick, Memory Stick Micro and M2 are trademarks of Sony Corporation.

FaceFilter Studio is a trademark of Reallusion, Inc.

Each company whose software title is mentioned in this manual has a Software License Agreement specific to its proprietary programs.

All other trademarks are the property of their respective owners.

B Troubleshooting and Routine Maintenance

Troubleshooting

If you think there is a problem with your machine, check the chart below and follow the troubleshooting tips.

Most problems can be easily resolved by yourself. If you need additional help, the Brother Solutions Center offers the latest FAQs and troubleshooting tips. Visit us at http://solutions.brother.com.

If you are having difficulty with your machine

Printing

Difficulty	Suggestions
No printout	Check the interface cable connection on both the machine and your computer. (See the *Quick Setup Guide*.)
	Make sure the machine is plugged in and that the **On/Off** key is on.
	Check to see if the LCD is showing an error message. (See *Error and maintenance messages* on page 101.)
	One or more ink cartridges have reached the end of their life. (See *Replacing the ink cartridges* on page 109.)
	If the LCD says `Cannot Print` and `Replace XX Ink` (where XX is an abbreviation of the colour), see *Replacing the ink cartridges* on page 109.
	Check that the correct printer driver has been installed and chosen.
	Make sure the machine is online. Click **Start** and then **Printers and Faxes**. Choose '**Brother MFC-XXXX** (where XXXX is your model name)', and make sure that 'Use Printer Offline' is unchecked.
	When you choose the **Print Odd Pages** and **Print Even Pages** settings, you may see a print error message on your computer, as the machine pauses during the process. The error message will disappear after the machine re-starts printing.
Poor print quality	Use only Genuine Brother Consumables as ink from other manufactures can cause print quality problems.
	Check the print quality. (See *Checking the print quality* on page 115.)
	Make sure that the Printer Driver or Paper Type setting in the menu matches the type of paper you are using. (See *Printing* for Windows® or *Printing and Faxing* for Macintosh® in the Software User's Guide on the CD-ROM and *Paper Type* on page 19.)
	Make sure that your ink cartridges are fresh. The following may cause ink to clog: ■ The expiration date written on the cartridge package has passed. (Brother Original cartridges stay usable for up to two years if kept in their original packaging.) ■ The ink cartridge was in your machine over six months. ■ The ink cartridge may not have been stored correctly before use.
	Make sure you are using Brother Original Innobella™ ink.
	Try using the recommended types of paper. (See *Acceptable paper and other print media* on page 13.)
	The recommended environment for your machine is between 20° C to 33° C.

Printing (continued)

Difficulty	Suggestions
White horizontal lines appear in text or graphics.	Clean the print head. (See *Cleaning the print head* on page 114.)
	Make sure you are using Brother Original Innobella™ ink.
	Try using the recommended types of paper. (See *Acceptable paper and other print media* on page 13.)
The machine prints blank pages.	Clean the print head. (See *Cleaning the print head* on page 114.)
Characters and lines are stacked.	Check the printing alignment. (See *Checking the print alignment* on page 116.)
Printed text or images are skewed.	Make sure the paper is loaded correctly in the paper tray and the paper side guides are adjusted correctly. (See *Loading paper and other print media* on page 8.)
	Make sure the Jam Clear Cover is closed properly.
Smudged stain at the top center of the printed page.	Make sure the paper is not too thick or curled. (See *Acceptable paper and other print media* on page 13.)
Smudged stain at the right or left corner of the printed page.	Make sure the paper is not curled when you print on the back side of the paper with the **Print Odd Pages** and **Print Even Pages** settings.
Printing appears dirty or ink seems to run.	Make sure you are using the recommended types of paper. (See *Acceptable paper and other print media* on page 13.) Don't handle the paper until the ink is dry.
	Make sure you are using Brother Original Innobella™ ink.
	If you are using photo paper, make sure that you have set the correct paper type. If you are printing a photo from your PC, set the **Media Type** in the **Basic** tab of the printer driver.
Stains appear on the reverse side or at the bottom of the page.	Make sure the printer platen is not dirty with ink. (See *Cleaning the machine printer platen* on page 113.)
	Make sure you are using the paper support flap. (See *Loading paper and other print media* on page 8.)
The machine prints dense lines on the page.	Check **Reverse Order** in the **Basic** tab of the printer driver.
The printouts are wrinkled.	In the printer driver **Advanced** tab, click **Colour Settings**, and uncheck **Bi-Directional Printing** for Windows® or **Bi-Directional Printing** for Macintosh®.
Cannot perform ‘Page Layout’ printing.	Check that the paper size setting in the application and in the printer driver are the same.
Print speed is too slow.	Try changing the printer driver setting. The highest resolution needs longer data processing, sending and printing time. Try the other quality settings in the printer driver **Advanced** tab.
	Turn the borderless feature off. Borderless printing is slower than normal printing. (See *Printing* for Windows® or *Printing and Faxing* for Macintosh® in the Software User's Guide on the CD-ROM.)
Smudged stain at the right or left corner of the printed page.	Make sure the paper is not curled when you print on the back side of the paper with the **Print Odd Pages** and **Print Even Pages** settings.
Photo paper does not feed properly.	When you print on Brother Photo paper, load one extra sheet of the same photo paper in the paper tray. An extra sheet has been included in the paper package for this purpose.
	Clean the paper pick-up roller. (See *Cleaning the paper pick-up roller* on page 114.)
Machine feeds multiple pages	Make sure the paper is loaded correctly in the paper tray. (See *Loading paper and other print media* on page 8.)
	Check that more than two types of paper are not loaded in the paper tray at any one time.

Printing (continued)

Difficulty	Suggestions
Printed pages are not stacked neatly.	Make sure you are using the paper support flap. (See *Loading paper and other print media* on page 8.)
Machine does not print from Adobe® Illustrator®.	Try to reduce the print resolution. (See *Printing* for Windows® or *Printing and Faxing* for Macintosh® in the Software User's Guide on the CD-ROM.)

Printing Received Faxes

Difficulty	Suggestions
Condensed print and white streaks across the page or the top and bottom of sentences are cut off.	You probably had a bad connection, with static or interference on the telephone line. Ask the other party to send the fax again.
Vertical black lines when receiving.	The sender's scanner may be dirty. Ask the sender to make a copy to see if the problem is with the sending machine. Try receiving from another fax machine.
Received colour fax prints only in black & white.	Replace the colour ink cartridges that have reached the end of their life, and then ask the other person to send the colour fax again. (See *Replacing the ink cartridges* on page 109.)
Left and Right margins are cut off or a single page is printed on two pages.	Turn on Auto Reduction. (See *Printing a reduced incoming fax* on page 35.)

Telephone Line or Connections

Difficulty	Suggestions
Dialling does not work. (No dial tone)	Check that the machine is plugged in and switched on.
	Check the line cord connection.
	(Not available in New Zealand) Change the Tone/Pulse setting. (See *Quick Setup Guide*.)
	Lift the external telephone's handset, (or the machine's handset or cordless handset if available), and then dial the number to send a manual fax. Wait to hear fax receiving tones before pressing **Mono Start** or **Colour Start**.
The machine does not answer when called.	Make sure the machine is in the correct receiving mode for your setup. (See *Receive modes* on page 32.) Check for a dial tone. If possible, call your machine to hear it answer. If there is still no answer, check the telephone line cord connection. If there is no ringing when you call your machine, ask your telephone company to check the line.

Receiving Faxes

Difficulty	Suggestions
Cannot receive a fax	Check the line cord connection.
	Make sure the machine is in the correct receiving mode for your setup. (See *Receive modes* on page 32.)
	If you often have interference on the telephone line, try changing the menu setting of Compatibility to `Basic(for VoIP)`. (See *Telephone line interference* on page 100.)

Sending Faxes

Difficulty	Suggestions
Cannot send a fax	Check the line cord connection.
	Make sure that the Fax key is illuminated. (See *Entering Fax mode* on page 26.)
	Ask the other party to check that the receiving machine has paper.
	Print the Transmission Verification Report and check for an error. (See *Reports* on page 52.)
Transmission Verification Report says 'Result:NG' or 'Result:ERROR'.	There is probably temporary noise or static on the line. Try sending the fax again. If you send a PC FAX message and get 'Result:ERROR' on the Transmission Verification Report, your machine may be out of memory. If the problem continues, ask the telephone company to check your telephone line.
	If you often get transmission errors due to possible interference on the telephone line, try changing the menu setting of Compatibility to `Basic(for VoIP)`. (See *Telephone line interference* on page 100.)
Poor fax send quality.	Try changing your resolution to `Fine` or `S.Fine`. Make a copy to check your machine's scanner operation. If the copy quality is not good, clean the scanner. (See *Cleaning the scanner glass* on page 113.)
Vertical black lines when sending. (MFC-290C only)	If the copy you made shows the same problem, clean the scanner. (See *Cleaning the scanner glass* on page 113.)

Handling Incoming Calls

Difficulty	Suggestions
The machine 'Hears' a voice as a CNG Tone.	If Fax Detect is set to On, your machine is more sensitive to sounds. It may mistakenly interpret certain voices or music on the line as a fax machine calling and respond with fax receiving tones. Deactivate the machine by pressing **Stop/Exit**. Try avoiding this problem by turning Fax Detect to Off. (See *Fax Detect* on page 35.)
Sending a fax call to the machine.	If you answered at the machine, press **Mono Start** and hang up at once. If you answered on an external or extension telephone, press your Remote Activation Code (default setting is ∗51 (∗91 for New Zealand)). When your machine answers, hang up.
Custom features on a single line.	If you have Call Waiting, Call Waiting/Caller ID, an alarm system or any other custom feature on a single telephone line with your machine, it may create a problem sending or receiving faxes. **For example:** If you subscribe to Call Waiting or some other custom service and its signal comes through the line while your machine is sending or receiving a fax, the signal can temporarily interrupt or disrupt the faxes. Brother's ECM (Error Correction Mode) feature should help overcome this problem. This condition is related to the telephone system industry and is common to all devices that send and receive information on a single, shared line with custom features. If avoiding a slight interruption is crucial to your business, a separate telephone line with no custom features is recommended.

Menu Setting Difficulties

Difficulty	Suggestions
The machine beeps when you try to access the Setup Receive menu.	If the Fax key is not illuminated, press it to turn on Fax mode. The Setup Receive setting is available only when the machine is in Fax mode.

Copying Difficulties

Difficulty	Suggestions
Cannot make a copy	Make sure that the Copy key is illuminated. (See *Entering Copy mode* on page 54.)
Vertical streaks appear on copies	If you see vertical streaks on copies, clean the scanner. (See *Cleaning the scanner glass* on page 113.)
Poor copy results when using the ADF (MFC-290C only)	Try using the scanner glass. (See *Using the scanner glass* on page 17.)
Vertical black line appears in copies (MFC-290C only)	Vertical black lines or streaks on copies are typically caused by dirt or correction fluid on the glass strip. Clean the glass strip. (See *Cleaning the scanner glass* on page 113.)
Fit to Page does not work properly.	Make sure your source document is not skewed. Reposition the document and try again.

Scanning Difficulties

Difficulty	Suggestions
TWAIN/WIA errors appear when starting to scan.	Make sure the Brother TWAIN/WIA driver is chosen as the primary source. In PaperPort™ 11SE with OCR, click **File**, **Scan or Get Photo** and click **Select** to choose the Brother TWAIN/WIA driver.
	(Hong Kong users only) Make sure the Brother TWAIN/WIA driver is chosen as the primary source. In Presto! PageManager with OCR, click **File**, **Select Source** and choose the Brother TWAIN/WIA driver.
OCR does not work.	Try increasing the scanner resolution.
Fit to Page does not work.	Make sure the document is not skewed on the scanner glass.
Poor scanning results when using the ADF. (MFC-290C only)	Try using the scanner glass. (See *Using the scanner glass* on page 17.)

Software Difficulties

Difficulty	Suggestions
Cannot install software or print	Run the **Repair MFL-Pro Suite** program on the CD-ROM. This program will repair and reinstall the software.
'Device Busy'	Make sure the machine is not showing an error message on the LCD.
Cannot print images from FaceFilter Studio.	To use FaceFilter Studio, you must install the FaceFilter Studio application from the CD-ROM supplied with your machine. To install FaceFilter Studio see the *Quick Setup Guide*. Also, before you start FaceFilter Studio for the first time, you must make sure your Brother machine is turned on and connected to your computer. This will allow you to access all the functions of FaceFilter Studio.

PhotoCapture Center™ Difficulties

Difficulty	Suggestions
Removable Disk does not work correctly.	1 Have you installed the Windows® 2000 update? If not, do the following: 1) Unplug the USB cable. 2) Install the Windows® 2000 update using one of the following methods. ■ Install MFL-Pro Suite from the CD-ROM. (See the *Quick Setup Guide*.) ■ Download the latest service pack from the Microsoft Web site. 3) Wait about 1 minute after you restart the PC, and then connect the USB cable. 2 Take out the memory card or USB Flash memory drive and put it back in again. 3 If you have tried 'Eject' from within Windows®, take out the memory card or USB Flash memory drive before you continue. 4 If an error message appears when you try to eject the memory card or USB Flash memory drive, it means the card is being accessed. Wait a while and then try again. 5 If all of the above do not work, turn off your PC and machine, and then turn them on again. (You will have to unplug the power cord of the machine to turn it off.)
Cannot access Removable Disk from Desktop icon.	Make sure that you have correctly inserted the memory card or USB Flash memory drive.
Part of my photo is missing when printed.	Make sure that Borderless Printing and Cropping are turned off. (See *Borderless printing* on page 69 and *Cropping* on page 69.)

Dial Tone detection

When you send a fax automatically, by default your machine will wait for a fixed amount of time before it starts to dial the number. By changing the Dial Tone setting to `Detection` you can make your machine dial as soon as it detects a dial tone. This setting can save a small amount of time when sending a fax to many different numbers. If you change the setting and start having problems with dialling you should change back to the default `No Detection` setting.

1. Press **Menu**, **0**, **5**.
   (**Menu**, **0**, **4** for New Zealand).
2. Press ▲ or ▼ to choose `Detection` or `No Detection`.
   Press **OK**.
3. Press **Stop/Exit**.

Telephone line interference

If you are having problems sending or receiving a fax due to possible interference on the telephone line, we recommend that you adjust the Equalization for compatibility to reduce the modem speed for fax operations.

1. Press **Menu**, **2**, **0**, **2**.
2. Press ▲ or ▼ to choose `Normal` (or `Basic(for VoIP)`).
   - `Basic(for VoIP)` cuts the modem speed to 9600 bps. Unless interference is a recurring problem on your telephone line, you may prefer to use it only when needed.
   - `Normal` sets the modem speed at 14400 bps. (Default)

   Press **OK**.
3. Press **Stop/Exit**.

Note

When you change the compatibility to `Basic(for VoIP)`, the ECM feature is only available for colour fax sending.

Error and maintenance messages

As with any sophisticated office product, errors may occur and consumable items may need to be replaced. If this happens, your machine identifies the error and shows an error message. The most common error and maintenance messages are shown below.

You can correct most errors and routine maintenance messages by yourself. If you need more help, the Brother Solutions Center offers the latest FAQs and troubleshooting tips.

Visit us at http://solutions.brother.com.

Error Message	Cause	Action
`B&W Print Only`	One or more of the colour ink cartridges have reached the end of their life. While this message appears on the LCD, each operation works in the following way: ■ Printing If you click **Greyscale** in the Advanced tab of the printer driver you can use the machine as a monochrome printer for approximately four weeks depending on the number of pages you print. ■ Copying If the paper type is set to `Plain Paper` or `Inkjet Paper`, you can make copies in monochrome. ■ Faxing If the paper type is set to `Plain Paper` or `Inkjet Paper`, the machine will receive and print faxes in monochrome. If a sending machine has a colour fax, the machine's 'handshake' will ask that the fax be sent as monochrome. If the paper type is set to `Other Glossy` or `Brother BP71`, the machine will stop all print operations. If you unplug the machine, or take out the ink cartridge, you cannot use the machine until you change to a new ink cartridge.	Replace the ink cartridges. (See *Replacing the ink cartridges* on page 109.)

Error Message	Cause	Action
Cannot Detect	You installed a new ink too quickly and the machine didn't detect it.	Take out the new ink cartridge and re-install it slowly until it clicks.
	If you are using non Brother ink the machine may not detect the ink cartridge.	Replace the cartridge with a Brother original ink cartridge. If the error message remains, contact your Brother dealer.
	An ink cartridge is not installed correctly.	Take out the new ink cartridge and re-install it slowly until it clicks. (See *Replacing the ink cartridges* on page 109.)
Cannot Print Replace XX Ink	One or more of the ink cartridges have reached the end of their life. The machine will stop all print operations. While memory is available, black & white faxes will be stored in the memory. If a sending machine has a colour fax, the machine's 'handshake' will ask that the fax be sent as monochrome.	Replace the ink cartridges. (See *Replacing the ink cartridges* on page 109.)
Clean Unable XX	The machine has a mechanical problem. **—OR—** A foreign object such as a clip or ripped paper is in the machine.	Open the scanner cover and look on the left, middle, and right hand side under the covers for any foreign objects inside the machine. If the error message continues, disconnect the machine from the power source for several minutes then reconnect it.
Comm.Error	Poor telephone line quality caused a communication error.	Try sending the fax again or try connecting the machine to another telephone line. If the problem continues, call the telephone company and ask them to check your telephone line.
Cover is Open	The scanner cover is not closed completely.	Lift the scanner cover and then close it again.
Data Remaining	Print data is left in the machine's memory.	Press **Stop/Exit**. The machine will cancel the job and clear it from the memory. Try to print again.
Disconnected	The other person or other person's fax machine stopped the call.	Try to send or receive again.
Document Jam	The document was not inserted or fed correctly, or the document scanned from the ADF was too long.	See *Using the ADF (MFC-290C only)* on page 17. See *Document jam (MFC-290C only)* on page 105.
High Temperature	The print head is too warm.	Allow the machine to cool down.
Hub is Unusable.	A Hub or USB Flash memory drive with Hub has been connected to the USB direct interface.	A Hub or USB Flash memory drive with Hub are not supported. Unplug the device from the USB direct interface.
Init Unable XX	The machine has a mechanical problem. **—OR—** A foreign object such as a clip or ripped paper is in the machine.	Open the scanner cover and look on the left, middle, and right hand side under the covers for any foreign objects inside the machine. If the error message continues, disconnect the machine from the power source for several minutes then reconnect it.

Error Message	Cause	Action
Ink Low Black Ink Low Yellow Ink Low Cyan Ink Low Magenta	The indicated ink cartridge is running out of ink. If a sending machine has a colour fax to send, your machine's 'handshake' will ask that the fax is sent as black & white. If the sending machine has the ability to convert it, the color fax will be printed at your machine as a black & white fax.	Order a new ink cartridge. You can continue printing until the LCD shows Cannot Print. (See *Replacing the ink cartridges* on page 109.)
Low Temperature	The print head is too cold.	Allow the machine to warm up.
Media Error	The memory card is either corrupted, incorrectly formatted, or there is a problem with the memory card.	Put the card firmly into the slot again to make sure it is in the correct position. If the error remains, check the media drive (slot) of the machine by putting in another memory card that you know is working.
Media is Full.	The memory card or USB flash memory drive you are using already contains 999 files.	Your machine can only save to your memory card or USB flash memory drive if it contains less than 999 files. Try deleting unused files to free some space and try again.
No Caller ID	There is no incoming call history. You have not received any calls, you have not activated the Caller ID feature on your machine, or you have not subscribed to the Caller ID service from your telephone company.	If you want to use the Caller ID feature call your telephone company. (See *Caller ID* on page 38.) (See *Caller ID* on page 41.) (See *Caller ID (For Singapore and Hong Kong)* on page 43.)
No Cartridge	An ink cartridge is not installed correctly.	Take out the new ink cartridge and re-install it slowly until it clicks. (See *Replacing the ink cartridges* on page 109.)
No File	The memory card or USB Flash memory drive in the media drive does not contain a .JPG file.	Put the correct memory card or USB Flash memory drive into the slot again.
No Paper Fed	The machine is out of paper or paper is not properly loaded in the paper tray.	Do one of the following: ■ Refill the paper in the paper tray, and then press **Mono Start** or **Colour Start**. ■ Remove the paper and load it again and then press **Mono Start** or **Colour Start** (See *Loading paper and other print media* on page 8.)
No Response/Busy	The number you dialled does not answer or is busy.	Verify the number and try again.
Not Registered	You tried to access a Speed Dial number that is not programmed.	Set up the Speed Dial number. (See *Storing Speed Dial numbers* on page 49.)

Error Message	Cause	Action
Out of Memory	The machine's memory is full.	When copy operation is in progress, press **Stop/Exit** and wait until the other operations in progress finish and then try again.
	The memory card or USB Flash memory drive you are using does not have enough free space to scan the documents.	Delete unused files from your memory card or USB Flash memory drive to make some free space and then try again.
Paper Jam	Paper is jammed in the machine.	Remove the jammed paper by following the steps in *Printer jam or paper jam* on page 106.
		Make sure the paper length guide is adjusted to the correct paper side.
Print Unable XX	The machine has a mechanical problem. **—OR—** A foreign object such as a clip or ripped paper is in the machine.	Open the scanner cover and look on the left, middle, and right hand side under the covers for any foreign objects inside the machine. If the error message continues, disconnect the machine from the power source for several minutes then reconnect it.
Scan Unable XX	The machine has a mechanical problem. **—OR—** A foreign object such as a clip or ripped paper is in the machine.	Open the scanner cover and look on the left, middle, and right hand side under the covers for any foreign objects inside the machine. If the error message continues, disconnect the machine from the power source for several minutes then reconnect it.
Unusable Device	A broken device has been connected to the USB direct interface.	Unplug the device from the USB direct interface, then press **On/Off** to turn the machine off and then on again.
Unusable Device Please Disconnect USB Device.	A USB device or USB Flash memory drive that is not supported has been connected to the USB direct interface. (For more information, visit us at http://solutions.brother.com.)	Unplug the device from the USB direct interface.
Wrong Paper Size	Paper is not the correct size.	Check that the machine's Paper Size setting matches the size of paper in the tray. (See *Paper Size* on page 19.)

Transferring your faxes or Fax Journal report

If the LCD shows:
`Clean Unable XX`
`Init Unable XX`
`Print Unable XX`
`Scan Unable XX`
We recommend transferring your faxes to another fax machine. (See *Transferring faxes to another fax machine* on page 105.)

You can also transfer the Fax Journal report to see if there are any faxes you need to transfer. (See *Transferring the Fax Journal report to another fax machine* on page 105.)

Note

If there is an error message on the machine's LCD, after the faxes have been transferred, disconnect the machine from the power source for several minutes, and then reconnect it.

Transferring faxes to another fax machine

If you have not set up your Station ID, you cannot enter fax transfer mode. (See *Enter personal information (station ID)* in the Quick Setup Guide.)

1. Press **Menu**, **9**, **0**, **1**.
2. Do one of the following:
   - If the LCD shows `No Data`, there are no faxes left in the machine's memory.

     Press **Stop/Exit**.
   - If the LCD shows `Enter Fax No.`, enter the fax number to which faxes will be forwarded.
3. Press **Mono Start**.

Transferring the Fax Journal report to another fax machine

If you have not set up your Station ID, you cannot enter fax transfer mode. (See *Enter personal information (station ID)* in the Quick Setup Guide.)

1. Press **Menu 9**, **0**, **2**.
2. Enter the fax number to which the Fax Journal report will be forwarded.
3. Press **Mono Start**.

Document jam (MFC-290C only)

Documents can jam in the ADF unit if they are not inserted or fed properly, or if they are too long. Follow the steps below to clear a document jam.

Document is jammed in the top of the ADF unit

1. Take out any paper from the ADF that is not jammed.
2. Open the ADF cover.
3. Pull the jammed document up and to the left.

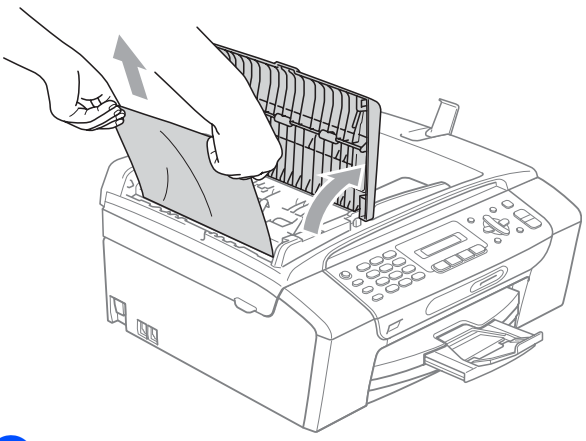

4. Close the ADF cover.
5. Press **Stop/Exit**.

Note

To avoid future document jams close the ADF cover correctly by pushing it gently in the middle.

B

Document is jammed inside the ADF unit

1. Take out any paper from the ADF that is not jammed.
2. Lift the document cover.
3. Pull the jammed document out to the left.

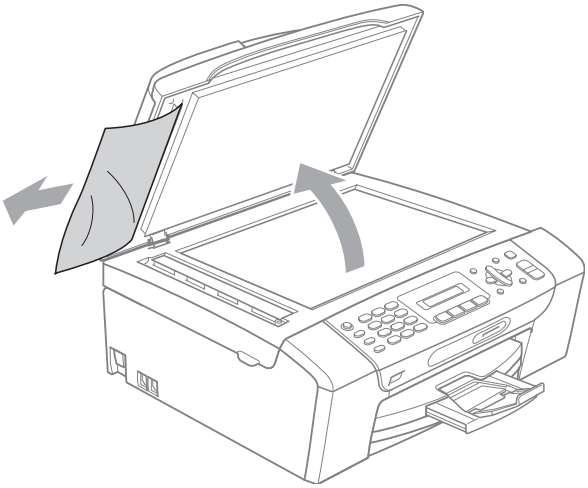

4. Close the document cover.
5. Press **Stop/Exit**.

Printer jam or paper jam

Take out the jammed paper depending on where it is jammed in the machine. Open and close the scanner cover to clear the error.

1. Pull the paper tray (1) out of the machine.

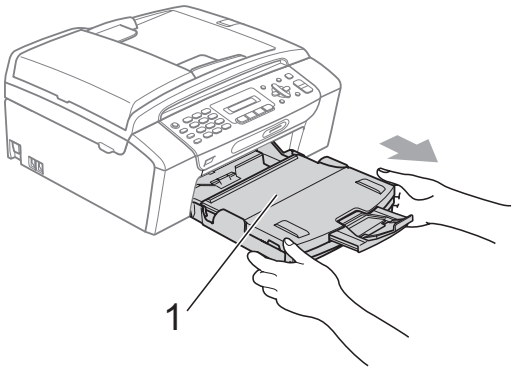

2. Pull out the jammed paper (1) and press **Stop/Exit**.

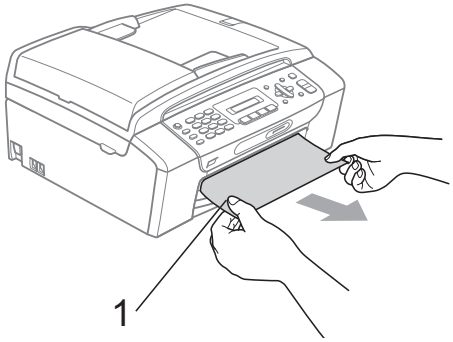

3. Reset the machine by lifting the scanner cover from the front of the machine and then close it.
   - If you cannot remove the jammed paper from the front of the machine, or the error message still appears on the LCD after you have removed the jammed paper, please go to the next step.

4 Open the Jam Clear Cover (1) at the back of the machine. Pull the jammed paper out of the machine.

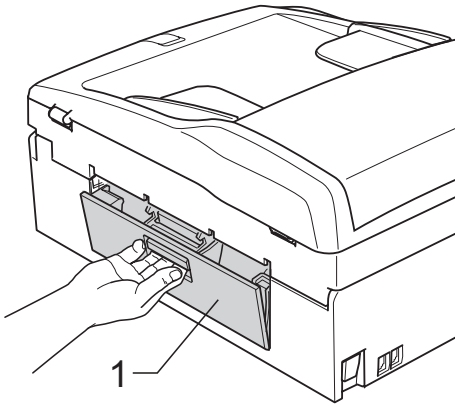

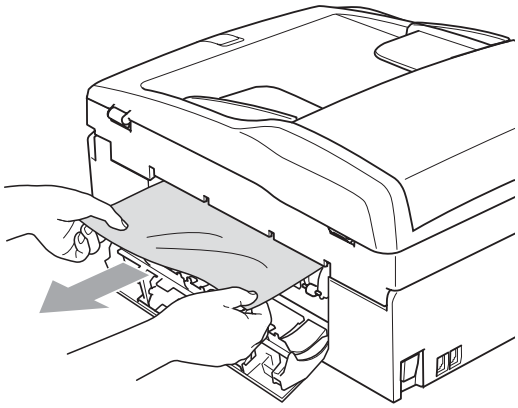

5 Close the Jam Clear Cover.
Make sure the cover is set properly.

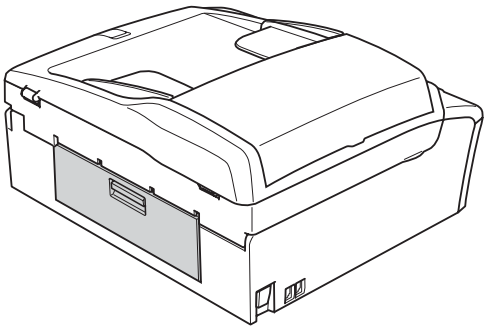

6 Using both hands, use the plastic tabs on both sides of the machine to lift the scanner cover (1) until it locks securely in the open position.
Make sure that there is no jammed paper left inside the machine.
Check both ends of the print carriage.

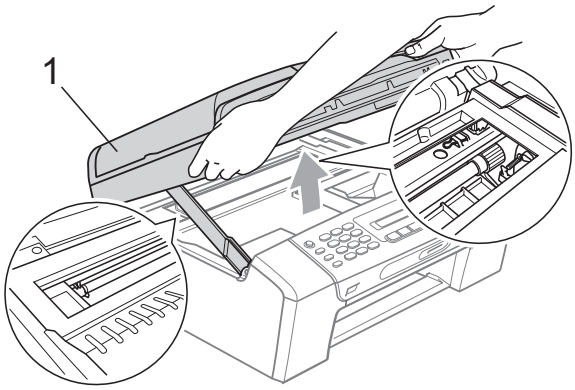

CAUTION

Before you unplug the machine from the power source, you can transfer your faxes that are stored in the memory to your PC or another fax machine so you will not lose any important messages. (See *Transferring your faxes or Fax Journal report* on page 105.)

B

Note

- If the paper is jammed under the print head, unplug the machine from the power source, and then move the print head to take out the paper.
- If the print head has stopped in the right corner as shown in the illustration, you cannot move the print head. Hold down **Stop/Exit** until the print head moves to the middle. Then unplug the machine from the power source, and take out the paper.

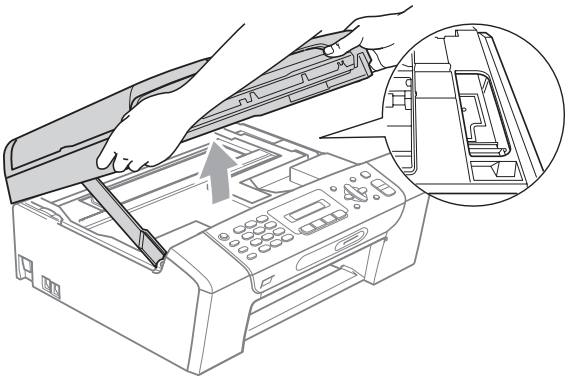

- If ink gets on your skin or clothing immediately wash it off with soap or detergent.

7 Lift the scanner cover to release the lock (1). Gently push the scanner cover support down (2) and close the scanner cover (3) using both hands.

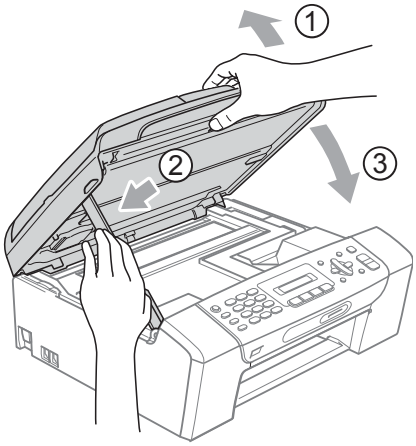

8 Push the paper tray firmly back into the machine. While holding the paper tray in place, pull out the paper support until it clicks and unfold the paper support flap.

Note

Make sure you pull out the paper support until it clicks.

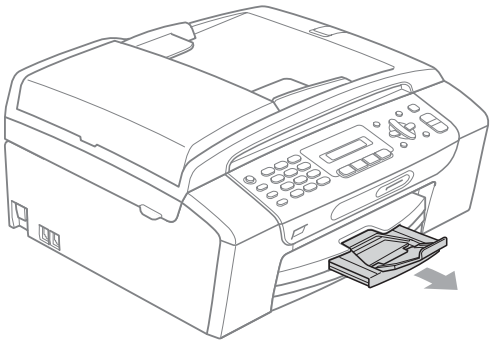

Routine maintenance

Replacing the ink cartridges

Your machine is equipped with an ink dot counter. The ink dot counter automatically monitors the level of ink in each of the 4 cartridges. When the machine detects an ink cartridge is running out of ink, the machine will tell you with a message on the LCD.

Note

For example, when one of the ink cartridge is nearly empty, the LCD will display `Ink low` (name of colour).

You should purchase a replacement cartridge in preparation for when the machine indicates the colour is completely empty.

When one of the ink cartridge is empty, the LCD will display `Cannot Print` or `B&W Print Only`.

You should only replace the actual ink cartridge when this message `Cannot Print` or `B&W Print Only` appears on the LCD.

The LCD will tell you which ink cartridge is low or needs replacing. Be sure to follow the LCD prompts to replace the ink cartridges in the correct order.

Even though the machine tells you to replace an ink cartridge, there will be a small amount of ink left in the ink cartridge. It is necessary to keep some ink in the ink cartridge to prevent air from drying out and damaging the print head assembly.

CAUTION

Brother multifunction machines are designed to work with ink of a particular specification and will work to a level of optimum performance and reliability when used with genuine Brother Branded ink cartridges. Brother cannot guarantee this optimum performance and reliability if ink or ink cartridges of other specifications are used. Brother does not therefore recommend the use of cartridges other than genuine Brother Branded cartridges or the refilling of cartridges with ink from other sources. If damage is caused to the print head or other parts of this machine as a result of using other brands of ink or ink cartridges, any repairs required as a result may not be covered by the warranty.

1 Open the ink cartridge cover.
If one or more ink cartridges have reached the end of their life, for example Black, the LCD shows `Cannot Print` and `Replace XX Ink`.

2 Press the lock release lever as shown to release the ink cartridge indicated on the LCD. Remove the cartridge from the machine.

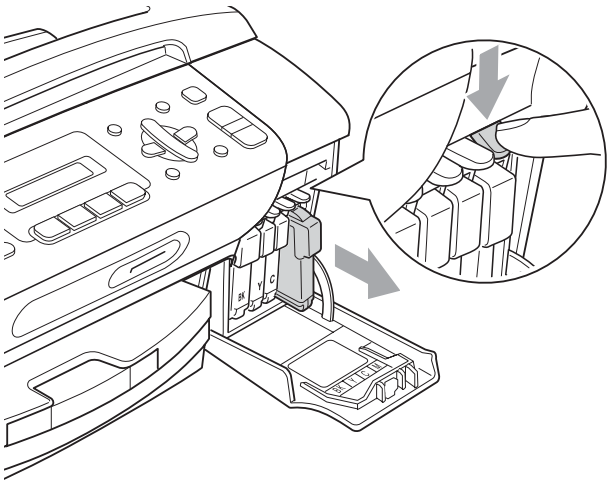

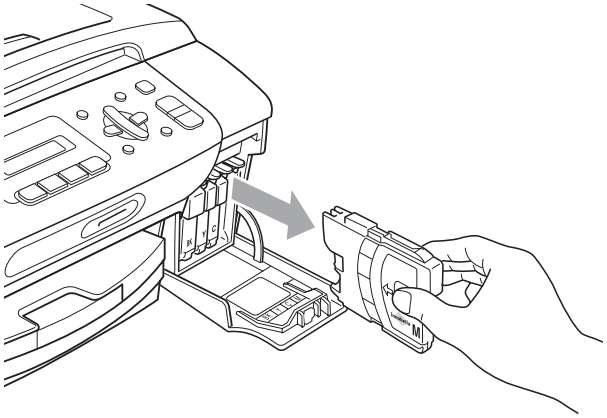

3 Open the new ink cartridge bag for the colour shown on the LCD, and then take out the ink cartridge.

4 Turn the green knob on the protective yellow cap clockwise until it clicks to release the vacuum seal, then remove the cap (1).

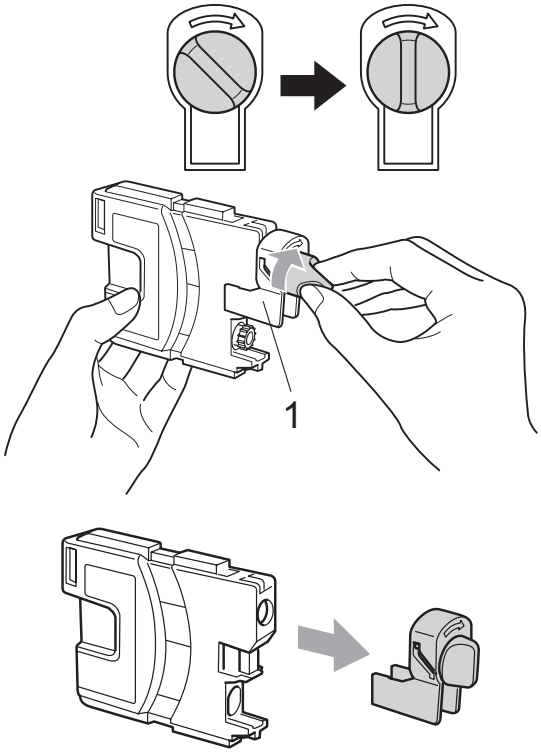

5 Each colour has its own correct position. Insert the ink cartridge in the direction of the arrow on the label.

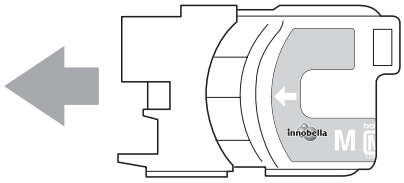

6 Gently push the ink cartridge until it clicks, and then close the ink cartridge cover.

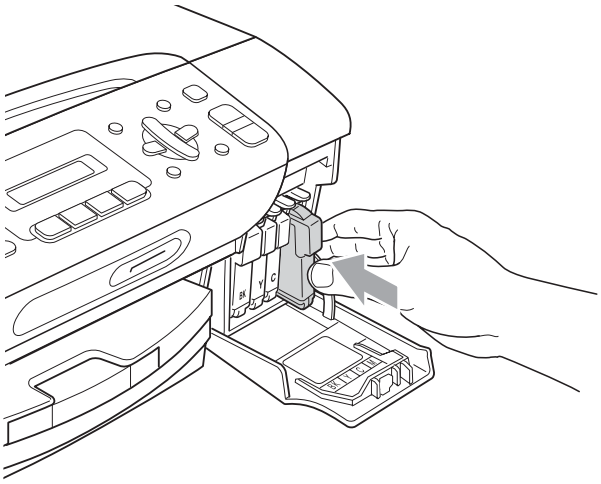

7 The machine will automatically reset the ink dot counter.

Note

- If you replaced an ink cartridge, for example Black, the LCD may ask you to verify that it was a brand new one (`Did You Change Blck?`). For each new cartridge you installed, press **1** (`Yes`) to automatically reset the ink dot counter for that colour. If the ink cartridge you installed is not a brand new one, be sure to press **2** (`No`).
- If the LCD shows `No Cartridge` or `Cannot Detect` after you install the ink cartridges, check that the ink cartridges are installed correctly.

WARNING

If ink gets in your eyes, wash them out with water at once and call a doctor if you are concerned.

CAUTION

DO NOT take out ink cartridges if you do not need to replace them. If you do so, it may reduce the ink quantity and the machine will not know the quantity of ink left in the cartridge.

DO NOT touch the cartridge insertion slots. If you do so, the ink may stain your skin.

If ink gets on your skin or clothing, immediately wash it off with soap or detergent.

If you mix the colours by installing an ink cartridge in the wrong position, clean the print head several times after correcting the cartridge installation.

Once you open an ink cartridge, install it in the machine and use it up within six months of installation. Use unopened ink cartridges by the expiration date written on the cartridge package.

DO NOT dismantle or tamper with the ink cartridge, this can cause the ink to leak out of the cartridge.

Cleaning the outside of the machine

CAUTION

Use neutral detergents. Cleaning with volatile liquids such as thinner or benzine will damage the outside surface of the machine.

DO NOT use cleaning materials that contain ammonia.

DO NOT use isopropyl alcohol to remove dirt from the control panel. It may crack the panel.

Clean the outside of the machine as follows:

1. Pull the paper tray (1) completely out of the machine.

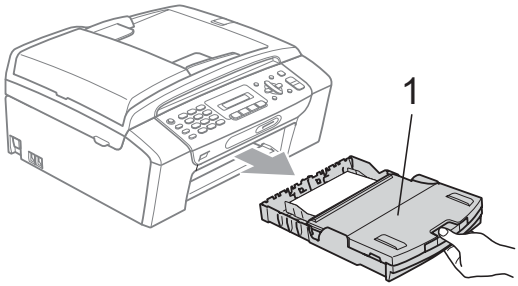

2. Wipe the outside of the machine with a soft cloth to remove dust.

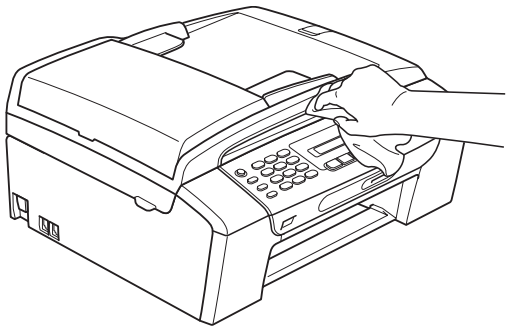

3. Lift the paper tray cover and remove anything that is stuck inside the paper tray.

4. Wipe the inside and outside of the paper tray with a soft cloth to remove dust.

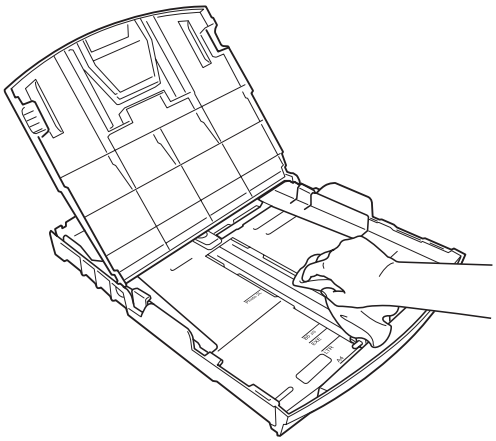

5. Close the paper tray cover and put the paper tray firmly back in the machine.

Cleaning the scanner glass

1. Lift the document cover (1). Clean the scanner glass (2) and the white plastic (3) with a soft lint-free cloth moistened with a non-flammable glass cleaner.

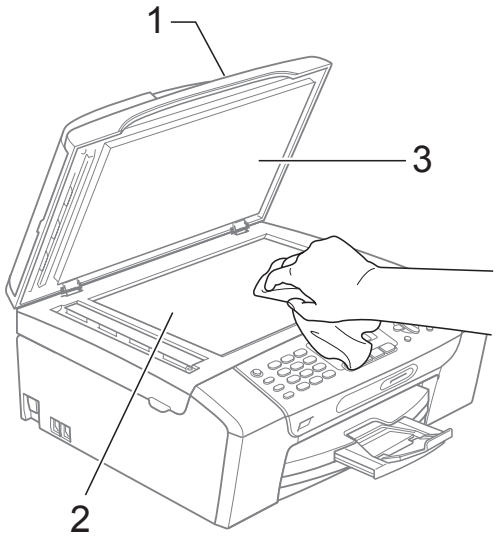

2. (MFC-290C only)
In the ADF unit, clean the white bar (1) and the glass strip (2) with a soft lint-free cloth moistened with a non-flammable glass cleaner.

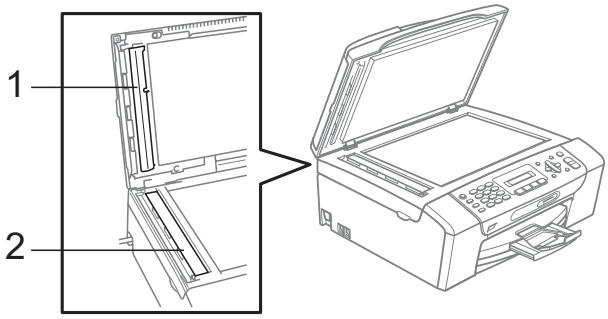

Note

In addition to cleaning the scanner glass and glass strip with a non-flammable glass cleaner, run your finger tip over the scanner glass and glass strip to see if you can feel anything on it. If you feel dirt or debris, clean the scanner glass and glass strip again concentrating on that area. You may need to repeat the cleaning process three or four times. To test, make a copy after each cleaning attempt.

Cleaning the machine printer platen

WARNING

Be sure to unplug the machine from the electrical socket before cleaning the printer platen.

1. Lift the scanner cover until it locks securely into the open position.
2. Clean the machine printer platen (1).

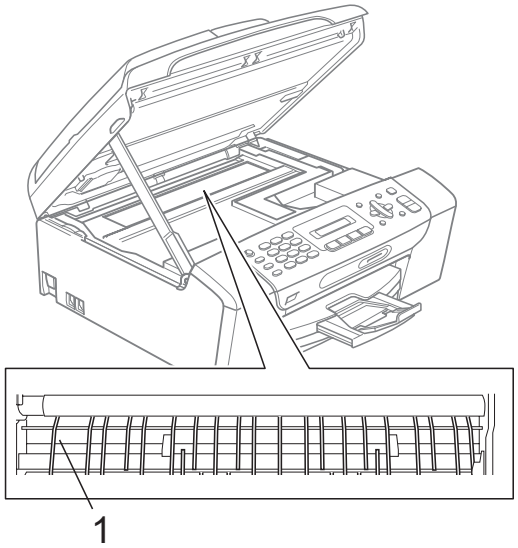

B

Cleaning the paper pick-up roller

1. Pull the paper tray completely out of the machine.
2. Unplug the telephone line cord first, and then unplug the machine from the electrical socket and open the Jam Clear Cover (1) at the back of the machine.

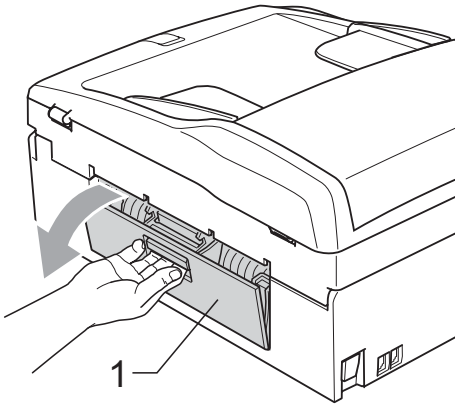

3. Clean the Paper Pick-up Roller (1) with isopropyl alcohol on a cotton swab.

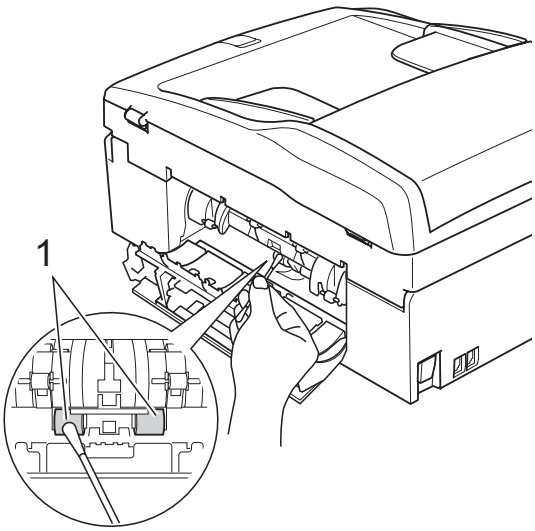

4. Close the Jam Clear Cover back. Make sure the cover is set properly.
5. Put the paper tray firmly back in the machine.
6. Re-connect the power cord.

Cleaning the print head

To maintain good print quality, the machine will automatically clean the print head. You can start the cleaning process manually if there is a print quality problem.

Clean the print head and ink cartridges if you get a horizontal line or blank text in the text or graphics on your printed pages. You can clean Black only, three colours at a time (Yellow/Cyan/Magenta), or all four colours at once.

Cleaning the print head consumes ink. Cleaning too often uses ink unnecessarily.

CAUTION

DO NOT touch the print head. Touching the print head may cause permanent damage and may void the print head's warranty.

1. Press **Menu**, **7**, **2**.
2. Press ▲ or ▼ to choose `Black`, `Color` or `All`.
   Press **OK**.
   The machine cleans the print head. When cleaning is finished, the machine will go back to standby mode automatically.

Note

If you clean the print head at least five times and the print has not improved, try installing a new genuine Brother Branded replacement cartridge for each problem colour. Try cleaning the print head again up to five more times. If the print has not improved call your Brother dealer.

Checking the print quality

If faded or streaked colours and text appear on your output, some of the nozzles may be clogged. You can check this by printing the Print Quality Check Sheet and looking at the nozzle check pattern.

1. Press **Menu**, **7**, **1**.
2. Press ▲ or ▼ to choose `Print Quality`.
   Press **OK**.
3. Press **Colour Start**.
   The machine begins printing the Print Quality Check Sheet.
4. Check the quality of the four colour blocks on the sheet.

   `Is Quality OK?`

   `1.Yes 2.No`
5. Do one of the following:
   - If all lines are clear and visible, press **1** to choose `Yes`, and go to step ❾.
   - If you can see missing short lines as shown below, press **2** to choose `No`.

OK

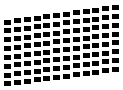

Poor

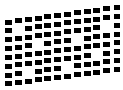

6. The LCD asks you if the print quality is OK for black and three colours.

   `Black OK?`

   `1.Yes 2.No`

   Press **1** (`Yes`) or **2** (`No`).
7. The LCD asks you if you want to start cleaning.

   `Start Cleaning?`

   `1.Yes 2.No`

   Press **1** (`Yes`).
   The machine starts cleaning the print head.
8. After cleaning is finished, press **Colour Start**.
   The machine starts printing the Print Quality Check Sheet again and then returns to step ❹.
9. Press **Stop/Exit**.
   If you repeat this procedure at least five times and the print quality is still poor, replace the ink cartridge for the clogged colour.
   After replacing the ink cartridge, check the print quality. If the problem still exists, repeat the cleaning and test print procedures at least five times for the new ink cartridge. If ink is still missing, call your Brother dealer.

CAUTION

DO NOT touch the print head. Touching the print head may cause permanent damage and may void the print head's warranty.

Note

When a print head nozzle is clogged the printed sample looks like this.

→

After the print head nozzle is cleaned, the horizontal lines are gone.

B

Checking the print alignment

You may need to adjust the print alignment after transporting the machine, if your printed text becomes blurred or images become faded.

1. Press **Menu**, **7**, **1**.
2. Press ▲ or ▼ to choose `Alignment`. Press **OK**.
3. Press **Mono Start** or **Colour Start**. The machine starts printing the Alignment Check Sheet.

   `Is Alignment OK?`

   `1.Yes 2.No`
4. Check the 600 dpi and 1200 dpi test prints to see if number 5 most closely matches number 0.
   - If the number 5 samples of both the 600 dpi and 1200 dpi test prints are the best matches, press **1** (`Yes`) to finish the Alignment Check, and go to step ❼.
   - If another test print number is a better match for either 600 dpi or 1200 dpi, press **2** (`No`) to choose it.
5. For 600 dpi, press the number of the test print that most closely matches the number 0 sample (1-8).

   `600dpi Adjust`

   `Select Best #5`
6. For 1200 dpi, press the number of the test print that most closely matches the number 0 sample (1-8).

   `1200dpi Adjust`

   `Select Best #5`
7. Press **Stop/Exit**.

Checking the ink volume

You can check the ink that is left in the cartridge.

1. Press **Menu**, **7**, **3**.
2. The LCD shows the ink volume.
3. Press ▲ or ▼ to choose the colour you want to check.
4. Press **Stop/Exit**.

Note

You can check the ink volume from your computer. (See *Printing* for Windows® or *Printing and Faxing* for Macintosh® in the Software User's Guide on the CD-ROM.)

Machine Information

Checking the serial number

You can see the machine's serial number on the LCD.

1. Press **Menu**, **6**, **1**.

   `1.Serial No.`

   `XXXXXXX`
2. Press **Stop/Exit**.

Packing and shipping the machine

When you transport the machine, use the packing materials that came with your machine. Follow the instructions below to properly pack your machine. Damage caused to your machine during transit is not covered by your warranty.

CAUTION

It is important to allow the machine to ‘park’ the print head after a print job. Listen carefully to the machine before unplugging it to make sure that all mechanical noise has stopped. Not allowing the machine to finish this parking process may lead to print problems and possible damage to the print head.

1. Open the ink cartridge cover.
2. Press the lock release lever to release the ink cartridge and take out all the ink cartridges. (See *Replacing the ink cartridges* on page 109.)
3. Install the green protective part, and then close the ink cartridge cover.

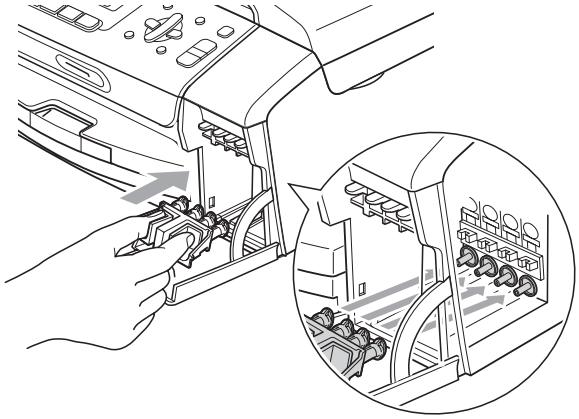

CAUTION

Make sure that the plastic tabs on both sides of the green protective part (1) have securely clicked into place (2).

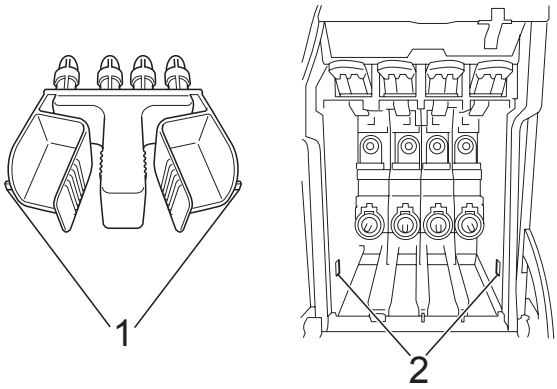

If you are not able to find the green protective part, DO NOT remove the ink cartridges before shipping. It is essential that the machine be shipped with either the green protective part or the ink cartridges in position. Shipping without them will cause damage to your machine and may void your warranty. When travelling with the ink cartridges still in the machine please keep the machine upright as this will protect the machine from leakage.

4. Unplug the machine from the telephone wall socket and take the telephone line cord out of the machine.
5. Unplug the machine from the electrical socket.
6. Using both hands, use the plastic tabs on both sides of the machine to lift the scanner cover until it locks securely into the open position. Then unplug the interface cable from the machine, if it is connected.

7 Lift the scanner cover (1) to release the lock. Gently push the scanner cover support down (2) and close the scanner cover (3).

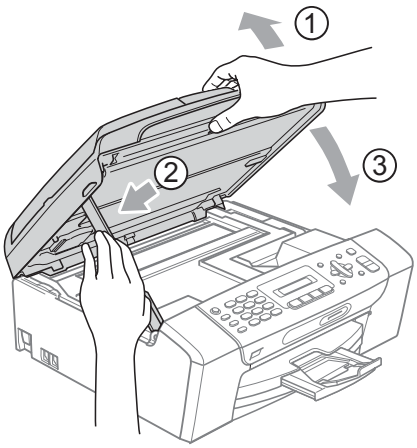

8 Wrap the machine in the bag and put it in the original carton with the original packing material.

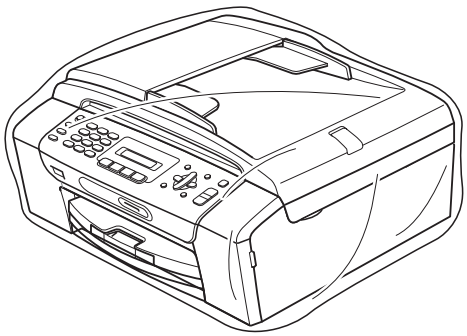

9 Pack the printed materials in the original carton as shown below. Do not pack the used ink cartridges in the carton.

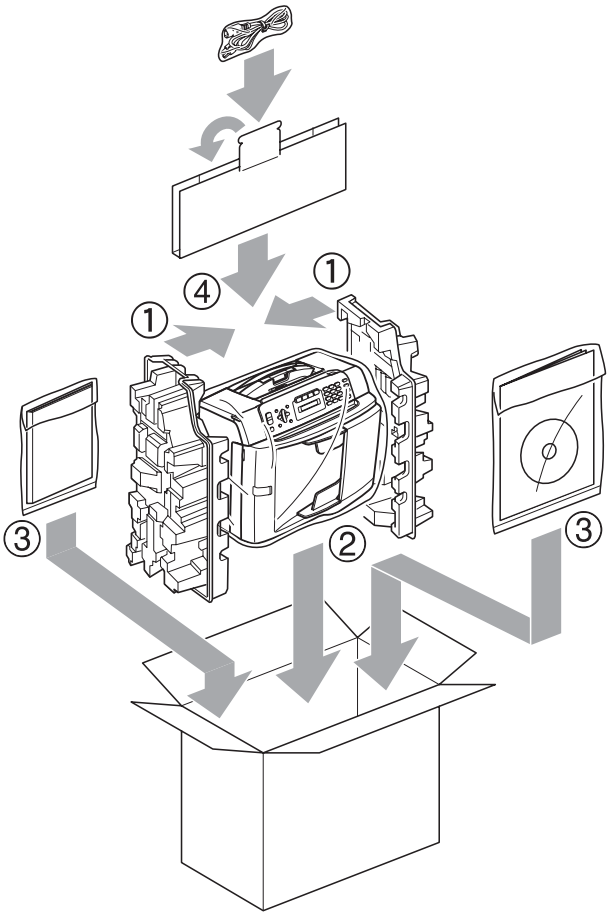

10 Close the carton and tape it shut.

C Menu and Features

On-screen programming

Your machine is designed to be easy to operate with LCD on-screen programming using the menu keys. User-friendly programming helps you take full advantage of all the menu selections your machine has to offer.

Since your programming is done on the LCD, we have created step-by-step on-screen instructions to help you program your machine. All you need to do is follow the instructions as they guide you through the menu selections and programming options.

Menu table

You can program your machine by using the Menu table that begins on page 121. These pages list the menu selections and options.

Press **Menu** followed by the menu numbers to program your machine.

Memory storage

Even if there is a power failure, you will not lose your menu settings because they are stored permanently. Temporary settings (such as Contrast, Overseas mode, and so on) will be lost. You may have to reset the date and time.

Menu keys

Menu	Access the menu.
OK	Go to the next menu level. Accept an option.
Clear / Back	Go back to the previous menu level. Delete an incorrect letter when you need to enter text into the machine.
	Scroll through the current menu level.
	Go back to the previous menu level.
Stop / Exit	Exit the menu.

To access the menu mode:

1. Press **Menu**.
2. Choose an option.
   - Press **1** for General Setup menu.
   - Press **2** for Fax menu.
   - Press **3** for Copy menu.

     ⋮

   - Press **0** for Initial Setup.

   You can scroll more quickly through each menu level by pressing ▲ or ▼ for the direction you want.
3. Press **OK** when that option appears on the LCD.
   The LCD will then show the next menu level.
4. Press ▲ or ▼ to scroll to your next menu selection.
5. Press **OK**.
   When you finish setting an option, the LCD shows `Accepted`.
6. Press **Stop/Exit**.

Menu Table

The menu table will help you understand the menu selections and options that are found in the machine's programs. The factory settings are shown in Bold with an asterisk.

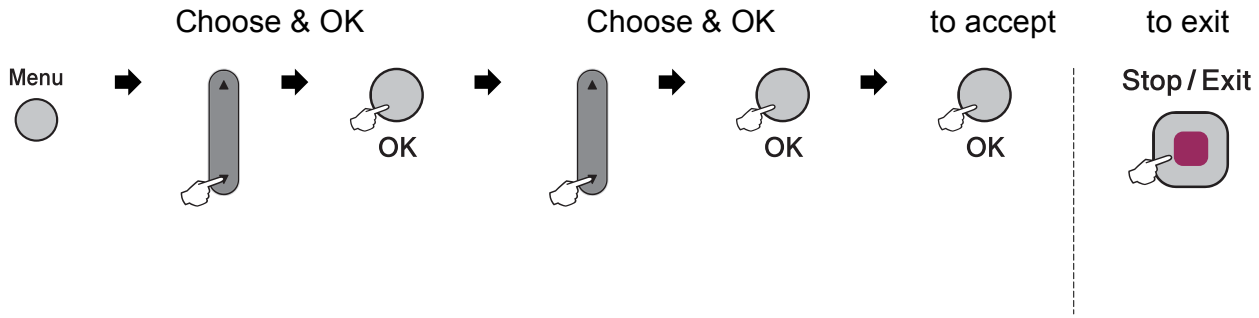

Main Menu	Submenu	Menu Selections	Options	Descriptions	Page
1.General Setup	1.Mode Timer	—	0 Sec 30 Secs 1 Min **2 Mins*** 5 Mins Off	Sets the time to return to Fax mode.	19
	2.Paper Type	—	**Plain Paper*** Inkjet Paper Brother BP71 Other Glossy Transparency	Sets the type of paper in the paper tray.	19
	3.Paper Size	—	**A4*** A5 10x15cm Letter Legal	Sets the size of the paper in the paper tray.	19
The factory settings are shown in Bold with an asterisk.					

Main Menu	Submenu	Menu Selections	Options	Descriptions	Page
1.General Setup (Continued)	4.Volume	1.Ring	Off Low **Med*** High	Adjusts the ring volume.	20
		2.Beeper	Off **Low*** Med High	Adjusts the volume level of the beeper.	20
		3.Speaker	Off Low **Med*** High	Adjusts the speaker volume.	20
	5.Daylight Save	—	**On*** Off	Changes for Daylight Savings Time manually.	21
	6.LCD Contrast	—	Light **Dark***	Adjusts the contrast of the LCD.	21
	7.Sleep Mode	—	1 Min 2 Mins 3 Mins 5 Mins **10 Mins*** 30 Mins 60 Mins	You can choose how long the machine will remain idle before it goes into sleep mode.	21
2.Fax	1.Setup Receive (In Fax mode only)	1.Ring Delay	02-10 (**02***) (Example for Australia.)	Sets the number of rings before the machine answers in Fax Only or Fax/Tel mode.	34
		2.F/T Ring Time	20Secs **30Secs*** 40Secs 70Secs (For New Zealand) 20Secs **30Secs*** 40Secs 55Secs	Sets the F/T pseudo/double-ring time in Fax/Tel mode.	34
	The factory settings are shown in Bold with an asterisk.				

Main Menu	Submenu	Menu Selections	Options	Descriptions	Page
2.Fax (Continued)	1.Setup Receive (In Fax mode only) (Continued)	3.Fax Detect	**On*** Off	Receives fax messages without pressing **Start**.	35
		4.Remote Codes	**On*** (*51, #51) (*91, #91 for New Zealand) Off	Allows you to answer all calls at an extension or external telephone and use codes to turn the machine on or off. You can personalize these codes.	46
		5.Auto Reduction	**On*** Off	Cuts the size of incoming faxes.	35
	2.Setup Send (In Fax mode only)	1.Contrast	**Auto*** Light Dark	Changes the lightness or darkness of faxes you send.	29
		2.Fax Resolution	**Standard*** Fine S.Fine Photo	Sets the default resolution for outgoing faxes.	29
		3.Real Time TX	Next Fax Only On **Off***	Sends a fax without using the memory.	30
		4.Overseas Mode	On **Off***	If you are having problems sending faxes overseas, set this to on.	31
		0.Glass ScanSize	**A4*** Letter	Adjusts the scan area of the scanner glass to the size of the document.	27
	3.Report Setting	1.Transmission	On On+Image **Off*** Off+Image	Sets initial setup for Transmission Verification Report and Fax Journal.	51
		2.Journal Period	Off **Every 50 Faxes*** Every 6 Hours Every 12 Hours Every 24 Hours Every 2 Days Every 7 Days		51
	4.Remaining Jobs	—	—	Checks which jobs are in the memory and lets you cancel chosen jobs.	28

The factory settings are shown in Bold with an asterisk.

Main Menu	Submenu	Menu Selections	Options	Descriptions	Page
2.Fax (Continued)	**0.Miscellaneous**	**1.TX Lock**	—	Stops unauthorized users from changing the machine's current settings.	22
		2.Compatibility	**Normal*** Basic(for VoIP)	Adjusts the equalization for transmission problems.	100
		3.Distinctive (Not available in New Zealand)	On **Off***	Use with phone company distincive ringing service allows you to have a voice number and fax number on the one phone line.	36 42
		3.Faxability (For New Zealand only)	On **Off***	If you have FaxAbility from Telecom, you can use this function to store the ringing pattern of your fax number. And if you set in to On, you should use the registered number only.	40
		4.Caller ID	Display# Print Report	View or print a list of the last 30 Caller IDs stored in the memory.	38 41 43
3.Copy	**1.Quality**	—	Fast **Normal*** Best	Chooses the Copy resolution for your type of document.	56
	2.Brightness	—	-□□□□■+ -□□□■□+ **-□□■□□+*** -□■□□□+ -■□□□□+	Adjusts the brightness for copies.	59
	3.Contrast	—	-□□□□■+ -□□□■□+ **-□□■□□+*** -□■□□□+ -■□□□□+	Adjusts the contrast for copies.	59
4.PhotoCapture	**1.Print Quality**	—	Normal **Photo***	Choose the print quality.	68
	2.Paper Type	—	Plain Paper Inkjet Paper Brother BP71 **Other Glossy***	Choose the paper and paper type.	68
	The factory settings are shown in Bold with an asterisk.				

Main Menu	Submenu	Menu Selections	Options	Descriptions	Page
4.PhotoCapture (Continued)	3.Paper Size	—	**10x15cm*** 13x18cm Letter A4	Choose the paper size.	68
	4.Print Size	—	8 x 10cm 9 x 13cm 10 x 15cm 13 x 18cm 15 x 20cm **Max. Size***	Choose the print size. (Appears when A4 or Letter is chosen in the Paper Size menu.)	68
	5.Brightness	—	-□□□□■+ -□□□■□+ **-□□■□□+*** -□■□□□+ -■□□□□+	Adjusts the brightness.	68
	6.Contrast	—	-□□□□■+ -□□□■□+ **-□□■□□+*** -□■□□□+ -■□□□□+	Adjusts the contrast.	68
	7.Cropping	—	**On*** Off	Crops the image around the margin to fit the paper size or print size. Turn this feature off if you want to print whole images or prevent unwanted cropping.	69
	8.Borderless	—	**On*** Off	Expands the printable area to fit the edges of the paper.	69
	9.Date Print	—	On **Off***	Prints the date on your photo.	69
	0.Scan to Media	1.Quality	B/W 200x100 dpi B/W 200 dpi **Color 150 dpi*** Color 300 dpi Color 600 dpi	Selects the Scan resolution for your type of document.	70
		2.B/W File Type	**TIFF*** PDF	Selects the default file format for black and white scanning.	71
		3.ColorFile Type	**PDF*** JPEG	Selects the default file format for colour scanning.	71

The factory settings are shown in Bold with an asterisk.

Main Menu	Submenu	Menu Selections	Options	Descriptions	Page
5.Print Reports	1.XMIT Verify	—	—	Prints a Transmission Verification Report for your last transmission.	52
	2.Help List	—	—	Prints the Help List so you can see at-a-glance how to quickly program your machine.	52
	3.Quick Dial	—	—	Lists name and numbers stored in the Speed Dial memory, in numerical order.	52
	4.Fax Journal	—	—	Lists information about the last incoming and outgoing faxes. (TX means Transmit.) (RX means Receive.)	52
	5.User Settings	—	—	Lists your settings.	52
6.Machine Info.	1.Serial No.	—	—	Lets you check the serial number of your machine.	116
7.Ink Management	1.Test Print	—	Print Quality Alignment	Lets you check the print quality or alignment.	115
	2.Cleaning	—	Black Color All	Lets you clean the print head.	114
	3.Ink Volume	—	—	Lets you check the available ink volume.	116
0.Initial Setup	1.Receive Mode	—	**Fax Only*** Fax/Tel External TAD Manual	Choose the receive mode that best suits your needs.	32
	2.Date&Time	—	—	Puts the date and time on the LCD and in headings of faxes you send.	See Quick Setup Guide.
	3.Station ID	—	Fax: Name:	Set your name and fax number to appear on each page you fax.	
	4.Tone/Pulse (Not Available in New Zealand)	—	**Tone*** Pulse	Choose the dialling mode.	
	5.Dial Tone (4.Dial Tone for New Zealand)	—	Detection **No Detection***	Turns Dial Tone Detection on or off.	100
	0.Local Language (Not Available In Australia and New Zealand)	—	**English*** Spanish	Always you to change the LCD language for your country.	—
	The factory settings are shown in Bold with an asterisk.				

Entering Text

When you are setting certain menu selections, such as the Station ID, you may need to enter text into the machine. Most number keys have three or four letters printed on keys. The keys for **0**, **#** and ∗ do not have printed letters because they are used for special characters.

By pressing the relevant number key repeatedly, you can access the character you want.

Press Key	one time	two times	three times	four times
2	A	B	C	2
3	D	E	F	3
4	G	H	I	4
5	J	K	L	5
6	M	N	O	6
7	P	Q	R	S
8	T	U	V	8
9	W	X	Y	Z

Inserting spaces

To enter a space in a fax number, press ▶ once between numbers. To enter a space in a name, press ▶ twice between characters.

Making corrections

If you entered an incorrect letter and want to change it, press ◀ to move the cursor under the incorrect character. Then press **Clear/Back**. Re-enter the correct character. You can also back up and insert letters.

Repeating letters

If you need to enter a letter that is on the same key as the letter before, press ▶ to move the cursor to the right before you press the key again.

Special characters and symbols

Press ∗, **#** or **0**, and then press ◀ or ▶ to move the cursor under the special character or symbol you want. Then press **OK** to choose it.

Press ∗	for	(space) ! ” # $ % & ’ ( ) ∗ + , - . / €
Press **#**	for	: ; < = > ? @ [ ] ^ _
Press **0**	for	Ä Ë Ö Ü À Ç È É 0

D Specifications

General

Printer Type	Inkjet	
Print Method	Mono:	Piezo with 94 × 1 nozzle
	Colour:	Piezo with 94 × 3 nozzles
Memory Capacity	32 MB	
LCD (liquid crystal display)	16 characters × 1line	
Power Source	AC 220 to 240V 50/60Hz	
Power Consumption	(MFC-250C)	
	Off:	Average 0.6 W
	Sleep Mode:	Average 3 W
	Standby:	Average 4.5 W
	Operating:	Average 22 W
	(MFC-290C)	
	Off:	Average 0.7 W
	Sleep Mode:	Average 3 W
	Standby:	Average 4.5 W
	Operating:	Average 24 W

Dimensions

(MFC-250C)

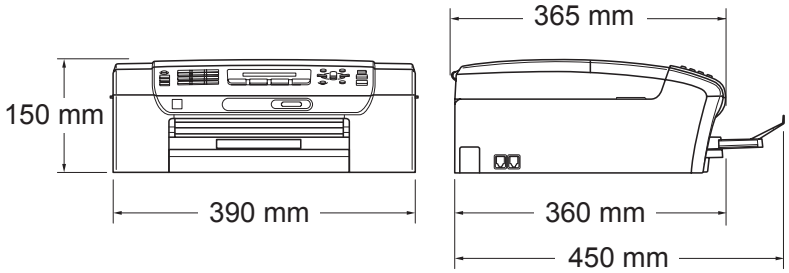

(MFC-290C)

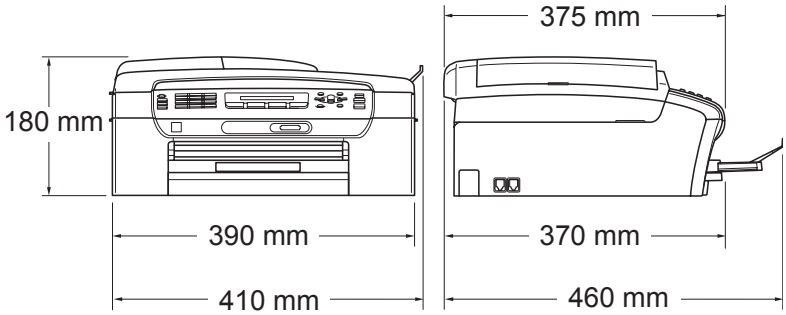

Weight	7.2 kg (MFC-250C)	
	7.8 kg (MFC-290C)	
Noise	Operating:	LPAm = 50 dB or less [1]
Temperature	Operating:	10 - 35° C
	Best Print Quality:	20 - 33° C
Humidity	Operating:	20 - 80% (without condensation)
	Best Print Quality:	20 - 80% (without condensation)
ADF (automatic document feeder)	Up to 15 pages (MFC-290C only)	
	Recommended Environment for Best Results:	
	Temperature: 20° C - 30° C	
	Humidity: 50% - 70%	
	Paper: [80 gsm]	
Paper Tray	100 Sheets [80 gsm]	

[1] This depends on printing conditions.

Print media

Paper Input	**Paper Tray** ■ Paper type: Plain paper, inkjet paper (coated paper), glossy paper [2], transparencies [1] [2] and envelopes ■ Paper size: Letter, Legal, Executive, A4, A5, A6, JIS B5, envelopes (commercial No.10, DL, C5, Monarch, JE4), Photo card, Index card and Post card [3]. Width: 98 mm - 215.9 mm Length: 148 mm - 355.6 mm For more details, see *Paper weight, thickness and capacity* on page 16. ■ Maximum paper tray capacity: Approx. 100 sheets of 80 gsm (20 lb) plain paper
Paper Output	Up to 50 sheets of A4 plain paper (face up print delivery to the output paper tray) [2]

[1] Use only transparencies recommended for inkjet printing.

[2] For glossy paper or transparencies, we recommend removing printed pages from the output paper tray immediately after they exit the machine to avoid smudging.

[3] See *Paper type and size for each operation* on page 15.

Fax

Compatibility	ITU-T Group 3
Coding System	MH/MR/MMR/JPEG
Modem Speed	Automatic Fallback 14,400 bps
Document Size	ADF Width: (MFC-290C) 148 mm to 216 mm ADF Length: (MFC-290C) 148 mm to 355.6 mm Scanner Glass Width: Max. 216 mm Scanner Glass Height: Max. 297 mm
Scanning Width	208 mm
Printing Width	204 mm
Greyscale	256 levels
Contrast Control	Automatic/Light/Dark (manual setting)
Resolution	■ Horizontal 8 dot/mm ■ Vertical Standard 3.85 line/mm (Mono) 7.7 line/mm (Colour) Fine 7.7 line/mm (Mono/Colour) Photo 7.7 line/mm (Mono) Superfine 15.4 line/mm (Mono)
Speed Dial	40 stations
Groups	Up to 6

Broadcasting [1]	90 stations
Automatic Redial	3 times at 5 minute intervals
Ring Delay	2, 3, 4, 5, 6, 7, 8, 9 or 10 rings (for Australia)
	1, 2, 3, 4, 5, 6, 7, 8, 9 or 10 rings (for New Zealand)
	0, 1, 2, 3, 4, 5, 6, 7, 8, 9 or 10 rings (for some countries)
Communication Source	Public switched telephone network.
Memory Transmission	Up to 200 [2]/170 [3] pages
Out of Paper Reception	Up to 200 [2]/170 [3] pages

[1] Monochrome only

[2] 'Pages' refers to the 'Brother Standard Chart No. 1' (a typical business letter, Standard resolution, MMR code). Specifications and printed materials are subject to change without prior notice.

[3] 'Pages' refers to the 'ITU-T Test Chart #1' (a typical business letter, Standard resolution, MMR code). Specifications and printed materials are subject to change without prior notice.

Copy

Colour/Monochrome	Yes/Yes
Document Size	ADF Width: (MFC-290C) 148 mm to 216 mm ADF Length: (MFC-290C) 148 mm to 355.6 mm Scanner Glass Width: Max. 215.9 mm Scanner Glass Length: Max. 297 mm
Copy Speed	(MFC-250C) Monochrome: Up to 20 pages/minute (A4 paper) [1] Colour: Up to 18 pages/minute (A4 paper) [1] (MFC-290C) Monochrome: Up to 20 pages/minute (A4 paper) [1] Colour: Up to 18 pages/minute (A4 paper) [1]
Multiple Copies	Stacks up to 99 pages Sorts up to 99 pages (Monochrome only) (MFC-290C only)
Enlarge/Reduce	25% to 400% (in increments of 1%)
Resolution	(Monochrome) ■ Scans up to 1200×1200 dpi ■ Prints up to 1200×1200 dpi (Colour) ■ Scans up to 600×1200 dpi ■ Prints up to 600×1200 dpi

[1] Based on Brother standard pattern (Fast mode/Stack Copy). Copy speeds vary with the complexity of the document.

PhotoCapture Center™

Note

The MFC-250C only supports USB Flash memory drives.

Available Media [1]	Memory Stick™ Memory Stick PRO™ Memory Stick Duo™ with adapter Memory Stick Micro™ (M2™) with adapter SD [2] SDHC [3] miniSD™ with adapter microSD with adapter xD-Picture Card™ [4] USB flash memory drive [5]
Resolution	Up to 1200×2400 dpi
File Extension	
(Media Format)	DPOF, Exif DCF
(Image Format)	Photo Print: JPEG [6] Scan to Media: JPEG, PDF (Colour) TIFF, PDF (Mono)
Number of Files	Up to 999 files (The folder inside a memory card or USB Flash memory drive is also counted.)
Folder	File must be in the 4th folder level of the memory card or USB Flash memory drive.
Borderless	Letter, A4, Photo (10×15 cm), Photo 2L (13×18 cm) [7]

1 Memory cards, Adapters and USB Flash memory drive are not included.

2 SecureDigital (SD) : 16MB to 2GB

3 SecureDigital High Capacity (SDHC) : 4GB to 8GB

4 xD-Picture Card™ Conventional Card from 16MB to 512MB
xD-Picture Card™ Type M from 256MB to 2GB
xD-Picture Card™ Type M+ 1GB and 2GB
xD-Picture Card™ Type H from 256MB to 2GB

5 USB 2.0 standard
USB Mass Storage Class from 16 MB to 8 GB
Support format: FAT 12/FAT16/FAT32

6 Progressive JPEG format is not supported.

7 See *Paper type and size for each operation* on page 15.

PictBridge

Compatibility	Supports the Camera & Imaging Products Association PictBridge standard CIPA DC-001 Visit http://www.cipa.jp/pictbridge for more information
Interface	PictBridge (USB) Port

Scanner

Colour/Monochrome	Yes/Yes
TWAIN Compliant	Yes (Windows® 2000 Professional/XP/XP Professional x64 Edition/Windows Vista®)
	Mac OS® X 10.2.4 or greater
WIA Compliant	Yes (Windows® XP [1]/Windows Vista®)
Colour Depth	36 bit colour Processing (Input)
	24 bit colour Processing (Output)
	(Actual Input: 30 bit colour/Actual Output: 24 bit colour)
Resolution	Up to 19200 × 19200 dpi (interpolated) [2]
	Up to 1200 × 2400 dpi (optical)
Scanning Speed	Mono: up to 3.44 sec.
	Colour: up to 4.83 sec.
	(A4 size in 100 × 100 dpi)
Document Size	ADF Width (MFC-290C): 148 mm to 216 mm
	ADF Length (MFC-290C): 148 mm to 355.6 mm
	Scanner Glass Width: Max. 216 mm
	Scanner Glass Length: Max. 297 mm
Scanning Width	Up to 210 mm
Greyscale	256 levels

1 Windows® XP in this User's Guide includes Windows® XP Home Edition, Windows® XP Professional, and Windows® XP Professional x64 Edition.

2 Maximum 1200 × 1200 dpi scanning when using the WIA Driver for Windows® XP and Windows Vista® (resolution up to 19200 × 19200 dpi can be chosen by using the Brother scanner utility)

Printer

Printer Driver	Windows® 2000 Professional/XP/XP Professional x64 Edition/Windows Vista® driver supporting Brother Native Compression mode
	Mac OS® X 10.2.4 or greater: Brother Ink Driver
Resolution	Up to 1200 × 6000 dpi
	1200 × 2400 dpi
	1200 × 1200 dpi
	600 × 1200 dpi
	600 × 600 dpi
	600 × 300 dpi
	600 × 150 dpi (Colour)
	450 × 150 dpi (Black & White)
Print Speed	(MFC-250C)
	Mono: Up to 27 pages/minute [1]
	Colour: Up to 22 pages/minute [1]
	(MFC-290C)
	Mono: Up to 30 pages/minute [1]
	Colour: Up to 25 pages/minute [1]
Printing Width	204 mm (210 mm) [2] (A4 size)
Borderless	Letter, A4, A6, Photo (10 × 15 cm), Index Card, Photo 2L (13 × 18 cm), Post Card [3]

1 Based on Brother standard pattern.
A4 size in draft mode.

2 When you set the Borderless feature to On.

3 See *Paper type and size for each operation* on page 15.

Interfaces

USB [1] [2]	A USB 2.0 interface cable that is no longer than 2.0 m.

[1] Your machine has a full-speed USB 2.0 interface. This interface is compatible with Hi-Speed USB 2.0; however, the maximum data transfer rate will be 12 Mbits/s. The machine can also be connected to a computer that has a USB 1.1 interface.

[2] Third party USB ports are not supported for Macintosh®.

Computer requirements

SUPPORTED OPERATING SYSTEMS AND SOFTWARE FUNCTIONS								
Computer Platform & Operating System Version		Supported PC Software Functions	PC Interface	Processor Minimum Speed	Minimum RAM	Recommended RAM	Hard Disk Space to install	
							For Drivers	For Applications
Windows® Operating System [1]	2000 Professional [5]	Printing, PC Fax Send [4], Scanning, Removable Disk	USB	Intel® Pentium® II or equivalent	64 MB	256 MB	110 MB	340 MB
	XP Home [2 5] XP Professional [2 5]				128 MB		110 MB	340 MB
	XP Professional x64 Edition [2]			64-bit (Intel®64 or AMD64) supported CPU	256 MB	512 MB	110 MB	340 MB
	Windows Vista® [2]			Intel® Pentium® 4 or equivalent 64-bit (Intel®64 or AMD64) supported CPU	512 MB	1 GB	600 MB	530 MB
Macintosh® Operating System [6]	Mac OS® X 10.2.4 - 10.4.3	Printing, PC Fax Send [4], Scanning, Removable Disk	USB [3]	PowerPC G4/G5 PowerPC G3 350MHz	128 MB	256 MB	80 MB	400 MB
	Mac OS® X 10.4.4 or greater			PowerPC G4/G5 Intel® Core™ Processor	512 MB	1 GB		

Conditions:

1 Microsoft® Internet Explorer® 5.5 or greater.

2 For WIA, 1200 x 1200 resolution. Brother Scanner Utility enables to enhance up to 19200 x 19200 dpi.

3 Third party USB ports are not supported.

4 PC Fax supports black and white only.

5 PaperPort™ 11SE supports Microsoft® SP4 or higher for Windows® 2000 and SP2 or higher for XP.

6 Presto! PageManager on the CD-ROM supports Mac OS® X 10.3.9 or higher. For Mac OS® X 10.2.4-10.3.8 Presto! PageManager is available as a download from the Brother Solutions Center.

For the latest driver updates, visit http://solutions.brother.com/.

All trademarks, brand and product names are property of their respective companies.

Consumable items

Ink	The machine uses individual Black, Yellow, Cyan and Magenta ink cartridges that are separate from the print head assembly.
Service Life of Ink Cartridge	The first time you install a set of ink cartridges the machine will use an amount of ink to fill the ink delivery tubes for high quality print outs. This process will only happen once. With all following ink cartridges you can print the specified number of pages. The cartridges provided with your machine have a lower yield than standard cartridges (65%).
Replacement Consumables	<Black> LC38BK, <Cyan> LC38C, <Magenta> LC38M, <Yellow> LC38Y Black - Approximately 300 pages [1] Yellow, Cyan and Magenta - Approximately 260 pages [1] [1] Approx. cartridge yield is declared in accordance with ISO/IEC 24711. For more information about the replacement consumables, visit us at http://www.brother.com/pageyield.

What is Innobella™?

Innobella™ is a range of genuine consumables offered by Brother. The name "Innobella™" derives from the words "Innovation" and "Bella" (meaning "Beautiful" in Italian) and is a representation of the "innovative" technology providing you with "beautiful" and "long lasting" print results.

When you print photo images, Brother recommends Innobella™ glossy photo paper (BP71 series) for high quality. Brilliant prints are made easier with Innobella™ Ink and paper.

E Glossary

This is a comprehensive list of features and terms that appear in Brother manuals. Availability of these features depends on the model you purchased.

ADF (automatic document feeder)

The document can be placed in the ADF and scanned one page at a time automatically.

Auto Reduction

Reduces the size of incoming faxes.

Automatic fax transmission

Sending a fax without picking up the handset of an external telephone.

Automatic Redial

A feature that enables your machine to redial the last fax number after five minutes if the fax did not go through because the line was busy.

Backup Print

Your machine prints a copy of every fax that is received and stored in memory.This is a safety feature so you will not lose messages during a power failure.

Beeper Volume

Volume setting for the beep when you press a key or make an error.

Brightness

Changing the Brightness makes the whole image lighter or darker.

Broadcasting

The ability to send the same fax message to more than one location.

Caller ID

A service purchased from the telephone company that lets you see the number (or name) of the party calling you.

CNG tones

The special tones (beeps) sent by fax machines during automatic transmission to tell the receiving machine that a fax machine is calling.

Coding method

Method of coding the information contained in the document. All fax machines must use a minimum standard of Modified Huffman (MH). Your machine is capable of greater compression methods, Modified Read (MR), Modified Modified Read (MMR) and JPEG, if the receiving machine has the same capability.

Communication error (Comm. Error)

An error during fax sending or receiving, usually caused by line noise or static.

Compatibility group

The ability of one fax unit to communicate with another. Compatibility is assured between ITU-T Groups.

Contrast

Setting to compensate for dark or light documents, by making faxes or copies of dark documents lighter and light documents darker.

Dual Access

Your machine can scan outgoing faxes or scheduled jobs into memory at the same time it is sending a fax from memory or receiving or printing an incoming fax.

ECM (Error Correction Mode)

Detects errors during fax transmission and resends the pages of the fax that had an error.

Extension telephone

A telephone using the same line as your fax but plugged into a separate wall socket.

External telephone

A TAD (telephone answering device) or telephone that is connected to your machine.

F/T Ring Time

The length of time that the Brother machine rings (when the Receive Mode setting is Fax/Tel) to notify you to pick up a voice call that it answered.

FaxAbility

A subscriber service purchased from the telephone company that provides another phone number on an existing phone line. The Brother fax machine uses the new number to simulate a dedicated fax line.

Fax Detect

Enables your machine to respond to CNG tones if you interrupt a fax call by answering it.

Fax Journal

Lists information about the last 200 incoming and outgoing faxes. TX means Transmit. RX means Receive.

Fax tones

The signals sent by sending and receiving fax machines while communicating information.

Fax/Tel

You can receive faxes and telephone calls. Do not use this mode if you are using a telephone answering device (TAD).

Fine resolution

Resolution is 203 × 196 dpi. It is used for small print and graphs.

Greyscale

The shades of grey available for copying, scanning and faxing photographs.

Group number

A combination of Speed Dial numbers that are stored in a Speed Dial location for Broadcasting.

Help list

A printout of the complete Menu table that you can use to program your machine when you do not have the User's Guide with you.

Innobella™

Innobella™ is a range of genuine consumables offered by Brother. For best quality results Brother recommends Innobella™ Ink and Paper.

Journal Period

The pre-programmed time period between automatically printed Fax Journal Reports. You can print the Fax Journal on demand without interrupting the cycle.

LCD (liquid crystal display)

The display screen on the machine that shows interactive messages during On-Screen Programming and shows the date and time when the machine is idle.

Manual fax

When you lift the handset of your external telephone you can hear the receiving fax machine answer before you press **Mono Start** or **Colour Start** to begin sending.

Menu mode

Programming mode for changing your machine's settings.

OCR (optical character recognition)

The bundled ScanSoft™ PaperPort™ 11SE with OCR or Presto! PageManager software application converts an image of text to text you can edit.

Out of Paper Reception

Receives faxes into the machine's memory when the machine is out of paper.

Overseas Mode

Makes temporary changes to the fax tones to accommodate noise and static on overseas telephone lines.

Pause

Allows you to place a 3.5 second delay in the dialling sequence while you are dialling using the dial pad or you are storing Speed Dial numbers. Press **Redial/Pause** as many times as needed for longer pauses.

Photo resolution (Mono only)

A resolution setting that uses varying shades of grey for the best representation of photographs.

PhotoCapture Center™

Allows you to print digital photos from your digital camera at high resolution for photo quality printing.

PictBridge

Allows you to print photos directly from your digital camera at high resolution for photo quality printing.

Pulse (Not available in New Zealand)

A form of rotary dialling on a telephone line.

Quick Dial List

A listing of names and numbers stored in Speed Dial memory, in numerical order.

Real Time Transmission

When memory is full, you can send faxes in real time.

Remaining jobs

You can check which jobs are waiting in memory and cancel jobs individually.

Remote Activation Code

Press this code (∗ **5 1** (∗ **9 1** for New Zealand)) when you answer a fax call on an extension or external telephone.

Remote Deactivation Code (For Fax/Tel mode only)

When the machine answers a voice call, it pseudo/double-rings. You can pick up at an extension telephone by pressing this code (**# 5 1** (**# 9 1** for New Zealand)).

Resolution

The number of vertical and horizontal lines per inch. See: Standard, Fine, Super Fine and Photo.

Ring Delay

The number of rings before the machine answers in `Fax Only` and `Fax/Tel` mode.

Ring Volume

Volume setting for the machine's ring.

Scan to Media

You can scan a monochrome or colour document into a memory card or USB Flash memory drive. Monochrome images will be in TIFF or PDF file format and colour images may be in PDF or JPEG file format.

Scanning

The process of sending an electronic image of a paper document into your computer.

Search

An electronic, numerical or alphabetical listing of stored Speed Dial and Group numbers.

Speed Dial

A pre-programmed number for easy dialling. You must press the (**Speed Dial**), **#**, and the two digit code, and **Mono Start** or **Colour Start** to start the dialling process.

Standard resolution

203 × 97 dpi. It is used for regular size text and quickest transmission.

Station ID

The stored information that appears on the top of faxed pages. It includes the sender's name and fax number.

Super Fine resolution (Mono only)

392 × 203 dpi. Best for very small print and line art.

TAD (telephone answering device)

You can connect an external TAD to your machine.

Temporary settings

You can choose certain options for each fax transmission and copy without changing the default settings.

Tone (Not available in New Zealand)

A form of dialling on the telephone line used for Touch Tone telephones.

Transmission

The process of sending faxes over the telephone lines from your machine to the receiving fax machine.

Transmission Verification Report

A listing for each fax sent, that shows its date, time and number.

User Settings

A printed report that shows the current settings of the machine.

F Index

A

ADF (automatic document feeder) 17, 26
Answering machine (TAD) 44
  connecting 45
Apple® Macintosh®
  See Software User's Guide on the CD-ROM. .....
Automatic
  fax receive 32
    Fax Detect 35

B

Broadcasting 27
  setting up Groups for 50

C

Cancelling
  jobs awaiting redial 31
Cleaning
  paper pick-up roller 114
  print head 114
  printer platen 113
  scanner 113
Connecting
  external TAD 44
  external telephone 46
Consumable items 140
Control panel overview 6
ControlCenter
  See Software User's Guide on the CD-ROM. .....
Copy
  Enlarge/Reduce 56
  enter Copy mode 54
  key 55
  multiple 54
  paper 60
  single 54
  sort 59
  temporary settings 55
  using ADF 17
  using scanner glass 17
Copy Options key (copying)
  paper size 60
  paper type 60
Cordless telephone 46
Custom telephone features on a single line 98

D

Dialling
  a pause 49
  access codes and credit card numbers 49, 50
  manual 48
Direct printing
  from a non-PictBridge camera 74
  from a PictBridge camera 72
Distinctive Ring
  setting ring pattern 38, 43
  turning off 38, 43
Dual Access 30

E

Envelopes 10, 15, 16
Error messages on LCD 101
  B&W Print Only 101
  Cannot Detect 102
  Cannot Print 102
  Comm. Error 102
  Ink Low 103
  No Cartridge 103
  No Paper Fed 103
  Not Registered 48, 103
  Out of Memory 30, 104
  Unable to Clean 102
  Unable to Init. 102
  Unable to Print 104
  Unable to Scan 104
Extension telephone, using 46
External telephone, connecting 46

F

Fax codes
  changing 47
  Remote Activation Code 35, 46
  Remote Deactivation Code 46, 47
Fax Detect 35
Fax Stream® Duet 36
Fax, from PC
  See Software User's Guide on the CD-ROM. .....
Fax, stand-alone
  receiving 32
    at end of conversation 33
    difficulties 95, 97
    F/T Ring Time, setting 34
    Fax Stream® Duet 37
    from extension telephone 46
    Receive Mode, choosing 32
    reducing to fit on paper 35
    Ring Delay, setting 34
    telephone line interference 100
  sending 26
    Broadcasting 27
    Cancelling from memory 31
    contrast 29
    enter Fax mode 26
    from ADF (MFC-290C only) 26
    from memory (Dual Access) 30
    from scanner glass 26
    manual 31
    overseas 31
    Real Time Transmission 30
    Resolution 29
    telephone line interference 100
Fax/Tel mode
  answering at extension telephones 46
  Fax Receive Code 46
  Fax Stream® Duet 36
  Ring Delay 34
  Telephone Answer Code 46

G

Greyscale 131, 136
Groups for Broadcasting 50

H

Help
  LCD messages 119
    using menu keys 119
  Menu Table 119, 121
Hook key, using 6

I

Ink cartridges
  checking ink volume 116
  ink dot counter 109
  replacing 109
Innobella™ 140

J

Jacks
  EXT
    external telephone 44
    TAD (answering machine) 44
Jams
  document 105
  paper 106

L

LCD (liquid crystal display) 119
  Contrast 21

M

Macintosh®
  See Software User's Guide on the CD-ROM. .....
Maintenance, routine 109
  replacing ink cartridges 109
Manual
  dialling 48
  receive 32
  transmission 31
Memory Storage 119
Menu Table 119
Mode, entering
  Copy 54
  Fax 26
  PhotoCapture 6
  Scan 6
Multi-line connections (PABX) 45

O

Out of Memory message 30, 31, 104

P

Packing the machine 117
Paper 13, 130
  capacity 16
  document size 26
  loading 8
  size 15, 19
  size of document 17
  type 15, 19
PaperPort™ 11SE with OCR
  See Software User's Guide on the CD-ROM and Help in the PaperPort™ 11SE application to access How-to-Guides. .....
PhotoCapture Center™
  Date Print 69
  DPOF printing 67
  from PC
    See Software User's Guide on the CD-ROM. .....
  Memory Stick PRO™ 62
  Memory Stick™ 62
  Print settings
    Brightness 68
    Paper type & size 68
  Scan to Media 70
  SecureDigital 62
  specifications 134
  xD-Picture Card™ 62
PictBridge
  DPOF Printing 73
Power failure 119
Print
  area 12
  difficulties 95, 97
  drivers 137
  improving quality 114, 115
  paper jams 106
  photos 66
  reports 52
  resolution 137
  specifications 137
Printing
  on small paper 11
  photos 66
  See Software User's Guide on the CD-ROM. .....
Programming your machine 119

Q

Quick Dial
  access codes and credit card numbers 50
  Broadcasting 27
    using Groups 27
  Group dial
    changing 49
    setting up Groups for Broadcasting 50
  Search 48
  Speed Dial
    changing 49
    setting up 49
    using 48

R

Receive Mode 32
  External TAD 32
  Fax Only 32
  Fax/Tel 32
  Manual 32
Redial/Pause 48
Reducing
  copies 56
  incoming faxes 35
Reports 51
  Fax Journal 52
    Journal Period 51
  Help List 52
  how to print 52
  Quick Dial List 52
  Transmission Verification 51, 52
  User Settings 52
Resolution
  copy 133
  fax 131
  print 137
  scan 136
  setting for next fax 29
Ring Delay, setting 34

F

S

Scanner glass
  cleaning 113
  using 17
Scanning
  See Software User's Guide on the CD-ROM. .....
Serial Number
  how to find ..... See inside front cover
Shipping the machine 117
Sleep Mode 21
Speed Dial
  changing 49
  setting up 49

T

TAD (telephone answering device), external 32, 44
  connecting 44, 45
  receive mode 32
  recording OGM 45
Telephone line
  connections 45
  difficulties 97
  interference 100
  multi-line (PABX) 45
Temporary copy settings 55
Text, entering 127
  special characters 127
Transparencies 13, 14, 16, 130
Troubleshooting 95
  checking ink volume 116
  document jam 105
  error messages on LCD 101
  if you are having difficulty
    copying 99
    incoming calls 98
    PhotoCapture Center™ 100
    printing 95
    printing received faxes 97
    receiving faxes 97
    scanning 99
    sending faxes 98
    software 99
    telephone line or connections 97
  paper jam 106
  print quality 114, 115
TX Lock
  turning on/off 23

V

Volume, setting
  beeper 20
  ring 20
  speaker 20

W

Windows®
  See Software User's Guide on the CD-ROM. .....

For Australia Only:

Warranty & Repair - For details about warranty on your Brother Product, the details are listed on the following link: **www.brother.com.au** under Warranty. For warranty service (repair) of your Brother product you will need to retain a copy of your sales docket and contact the Support Centre for location of the nearest Authorised Warranty Centre (AWC)

Support - For technical support for your Brother Product other than what you can resolve through the User's Guide, please visit our website or our solutions website for FAQs/Troubleshooting, Drivers & Software, or contact the Product Support Centre for any technical or customer care/support enquiry.

Product Support Centre: Australia

Brother International (Aust) Pty Ltd

Phone: 02 8875 6000

Fax: 02 9870 7223

Email: **productsupport@brother.com.au**

Web Site: **www.brother.com.au**

Solutions Site: **http://solutions.brother.com**

brother®

Visit us on the World Wide Web
http://www.brother.com

This machine is approved for use in the country of purchase only. Local Brother companies or their dealers will only support machines purchsed in their own countries.