USER'S GUIDE

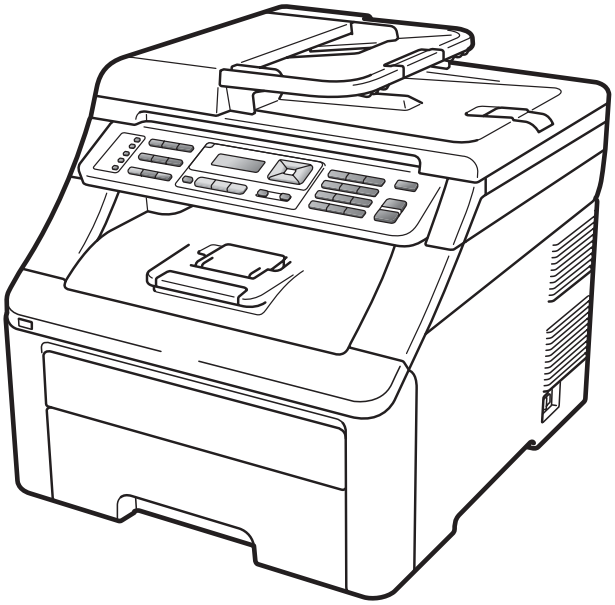

MFC-9120CN
MFC-9320CW

Version 0

ARL/ASA/NZ

If you need to call Customer Service

Please complete the following information for future reference:

Model Number: MFC-9120CN and MFC-9320CW
(Circle your model number)

Serial Number: [1] _____

Date of Purchase: _____

Place of Purchase: _____

[1] The serial number is on the back of the unit. Retain this User's Guide with your sales receipt as a permanent record of your purchase, in the event of theft, fire or warranty service.

Register your product on-line at

http://www.brother.com/registration/

By registering your product with Brother, you will be recorded as the original owner of the product. Your registration with Brother:

- may serve as confirmation of the purchase date of your product should you lose your receipt; and
- may support an insurance claim by you in the event of product loss covered by insurance.

© 2009 Brother Industries, Ltd.

Approval Information and Compilation and Publication Notice

THIS EQUIPMENT IS DESIGNED TO WORK WITH A TWO WIRE ANALOGUE PSTN LINE FITTED WITH THE APPROPRIATE CONNECTOR.

APPROVAL INFORMATION

Brother advises that this product may not function correctly in a country other than where it was originally purchased, and does not offer any warranty in the event that this product is used on public telecommunication lines in other countries.

Compilation and Publication Notice

Under the supervision of Brother Industries Ltd., this manual has been compiled and published, covering the latest product descriptions and specifications.

The contents of this manual and the specifications of this product are subject to change without notice.

Brother reserves the right to make changes without notice in the specifications and materials contained herein and shall not be responsible for any damages (including consequential) caused by reliance on the materials presented, including but not limited to typographical and other errors relating to the publication.

Table of Contents

Section I General

1 General information 2

Using the documentation 2
Symbols and conventions used in the documentation 2
Accessing the Software User's Guide and Network User's Guide 3
Viewing documentation 3
Accessing Brother Support (For Windows®) 5
Control panel overview 6
Data LED indications 10

2 Loading paper and documents 11

Loading paper and print media 11
Loading paper in the standard paper tray 11
Loading paper in the manual feed slot 12
Unprintable area 16
Acceptable paper and other print media 17
Type and size of paper 17
Handling and using special paper 19
Loading documents 22
Using the automatic document feeder (ADF) 22
Using the scanner glass (Flatbed) 23

3 General Setup 24

Mode Timer 24
Paper settings 24
Paper Type 24
Paper Size 24
Volume settings 25
Ring volume 25
Beeper volume 25
Speaker volume 25
Set Daylight Saving Time 26
Ecology features 26
Toner Save 26
Sleep Time 26
LCD Contrast 27
Dial Prefix 27
Setting up the prefix number 27
Changing the prefix number 28

4 Security features 29

Secure Function Lock 2.0 (MFC-9320CW only) 29
Setting the password for the administrator 29
Changing the password for the administrator 30
Setting up the public user mode 30
Setting up restricted users 31
Turning Secure Function Lock on/off 31
Switching Users 32
Memory Security (MFC-9120CN only) 32
Setting up the password 33
Changing your memory security password 33
Turning memory security on/off 33
Setting Lock 34
Setting up the password 34
Changing your Setting Lock password 34
Turning Setting Lock on/off 34
Restricting dialling 35
Dial pad restriction 35
One Touch restriction 35
Speed Dial restriction 35

Section II Fax

5 Sending a fax 38

How to fax 38
Entering fax mode 38
Sending a fax from the ADF 38
Sending a fax from the scanner glass 38
Faxing Letter size document from the scanner glass 39
Cancelling a fax in progress 39
Broadcasting (black & white only) 39
Cancelling a Broadcast in progress 40
Additional sending operations 40
Sending faxes using multiple settings 40
Electronic cover page (black & white only) 41
Contrast 42
Changing Fax Resolution 42
Dual access (black & white only) 43
Real Time Transmission 43
Overseas Mode 44
Delayed Fax (black & white only) 44
Delayed batch transmission (black & white only) 44
Checking and cancelling waiting jobs 45
Sending a fax manually 45
Out of memory message 45

6 Receiving a fax 46

Receive modes 46
Choosing the receive mode 46
Using receive modes 47
Fax Only 47
Fax/Tel 47
Manual 47
External TAD 47
Receive Mode settings 48
Ring Delay 48
F/T Ring Time (Fax/Tel mode only) 48
Fax Detect 49
Setting the Print Density 49
Additional receiving operations 50
Printing a reduced incoming fax 50
Setting the Fax Receive Stamp (black & white only) 50
Receiving faxes into memory (black & white only) 50
Printing a fax from the memory 51
Out of Paper Reception (black & white only) 51

7 Telephone and external devices 52

Telephone line services 52
Do you have Voice Mail? 52
Telephone Service for Australia 52
Telstra® FaxStream® Duet® (Distinctive Ringing) 52
Telephone Service for New Zealand 54
FaxAbility 54
Telephone Service for Some Countries 56
Distinctive Ringing (For Singapore and Hong Kong) 56
Caller ID (not available in India) 57
Connecting an external TAD 58
Connections 59
Recording an outgoing message (OGM) 59
Multi-line connections (PABX) 59
External and extension telephones 60
Operation from external or extension telephones 60
For Fax/Tel mode only 60
Connecting an external or extension telephone 60
Using a non-Brother cordless external handset 61
Using Remote Codes 61

8 Dialling and storing numbers 63

How to dial 63
Manual dialling 63
One touch Dialling 63
Speed dialling 63
Search 63
Fax redial 64
Storing numbers 64
Storing a pause 64
Storing One Touch Dial numbers 65
Storing Speed Dial numbers 66
Changing One Touch and Speed Dial numbers 68
Setting up Groups for Broadcasting 69
Combining quick dial numbers 71
Tone or Pulse (not available in New Zealand) 71

9 Remote Fax Options (black & white only) 72

Fax Forwarding 72
Fax Storage 73
PC Fax Receive 73
Changing Remote Fax Options 74
Turning off Remote Fax Options 75
Remote retrieval 75
Setting a Remote Access Code 75
Using your Remote Access Code 76
Retrieving fax messages 76
Changing the Fax Forwarding number 77
Remote fax commands 78

10 Polling 79

Polling receive 79
Secure polling 79
Delayed polling 79
Sequential polling 80
Polled transmit (black & white only) 80
Setup for polled transmit 80
Setup for polled transmit with a secure code 81

11 Printing reports 82

Fax reports 82
Transmission verification report 82
Fax Journal 83
Reports 83
How to print a report 84

Section III Copy

12 Making copies 86

How to copy 86
Entering copy mode 86
Making a single copy 86
Making multiple copies 86
Stop copying 86
Copy options (temporary settings) 87
Enlarging or reducing the image copied 87
Using the Options key 88
Improving copy quality 89
Sorting copies using the ADF 89
Adjusting Contrast, Colour and Brightness 89
Making N in 1 copies (page layout) 90
Out of memory message 92

Section IV Direct printing

13 Printing photos from a digital camera (MFC-9320CW only) 94

Before using PictBridge 94
PictBridge requirements 94
Using PictBridge 94
Setting your digital camera 94
Printing images 95
DPOF printing 96
Printing images with Secure Function Lock 2.0 enabled (MFC-9320CW only) 96
Connecting a camera as a storage device 98
Understanding the error messages 98

14 Printing data from a USB Flash memory drive (MFC-9320CW only) 99

Supported file formats 99
Creating a PRN or PostScript® 3™ file for direct printing 99
Printing data directly from the USB Flash memory drive (MFC-9320CW only) 100
Printing data directly from the USB flash memory drive with Secure Function Lock 2.0 enabled (MFC-9320CW only) 101
Understanding the error messages 103

Section V Software

15 Software and Network features 106

How to read the HTML User's Guide 106
Windows® 106
Macintosh 106

Section VI Appendixes

A Safety and legal 108

Choosing a location 108
To use the machine safely 109
Disconnect device 113
LAN connection 113
Radio interference 113
International ENERGY STAR® Qualification Statement 113
Important Information for Australia 114
IMPORTANT-For Your Safety 114
Important Safety Instructions 114
Important Information for New Zealand 115
IMPORTANT-For Your Safety 115
Important Safety Instructions 115
IMPORTANT NOTICE 118
Important Information for Some Countries 119
Important Safety Instructions 119
Libtiff Copyright and License 121
Legal limitations for copying 121
Trademarks 122

B Options 123

Memory board 123
Installing extra memory 123

C Troubleshooting and routine maintenance 125

Troubleshooting 125
If you are having difficulty with your machine 125
Improving the print quality 134
Setting Dial Tone detection 141
Telephone line interference 141
Error and maintenance messages 142
Transferring your faxes or Fax Journal report 148
Document jams 149
Paper jams 150
Routine maintenance 155
Cleaning the outside of the machine 155
Cleaning the scanner glass 156
Cleaning the LED heads 157
Cleaning the corona wires 158
Cleaning the drum unit 159
Cleaning the paper pick-up rollers 164
Calibration 164
Auto Registration 165
Manual Registration 165
Replacing the consumable items 166
Replacing a Toner cartridge 168
Drum units 173
Replacing the belt unit 177
Replacing the waste toner box 181
Replacing periodic maintenance parts 186
Machine Information 187
Checking the Serial Number 187
Checking the Page Counters 187
Checking the remaining life of parts 187
Reset Functions 187
How to reset the machine 188
Packing and shipping the machine 188

D Menu and features 193

On-screen programming 193
Menu table 193
Memory storage 193
Menu keys 193
How to access the menu mode 194
Menu table 195
Entering text 213

E Specifications 215

General 215
Print media 217
Fax 218
Copy 219
Scan 220
Print 221
Interfaces 222
PictBridge (MFC-9320CW) 223
Direct Print feature (MFC-9320CW) 224
Computer requirements 225
Consumable items 226
Ethernet wired network 227
Ethernet wireless network (MFC-9320CW only) 229
Authentication and encryption for wireless users only 231
Wireless one-push configuration 233

F Glossary 234

G Index 238

Section I

General

General information 2
Loading paper and documents 11
General Setup 24
Security features 29

1 General information

Using the documentation

Thank you for buying a Brother machine! Reading the documentation will help you make the most of your machine.

Symbols and conventions used in the documentation

The following symbols and conventions are used throughout the documentation.

Bold	Bold style identifies keys on the machine control panel or computer screen.
Italics	Italicized style emphasizes an important point or refers you to a related topic.
`Courier New`	Courier New font identifies the messages shown on the LCD of the machine.

WARNING

Warnings tell you what to do to prevent possible personal injury.

CAUTION

Cautions specify procedures you must follow or avoid to prevent possible minor injuries.

IMPORTANT

IMPORTANT describes procedures you must follow or avoid to prevent possible machine problems or damage to other objects.

Electrical Hazard icons alert you to a possible electrical shock.

Hot Surface icons warn you not to touch machine parts that are hot.

Notes tell you how you should respond to a situation that may arise or give tips about how the current operation works with other features.

Accessing the Software User's Guide and Network User's Guide

This User's Guide does not contain all the information about the machine such as how to use the advanced features of Fax, Printer, Scanner, PC Fax and Network. When you are ready to learn detailed information about these operations, read the **Software User's Guide** and **Network User's Guide**.

Viewing documentation

Viewing documentation (Windows®)

To view the documentation, from the **Start** menu, point to **Brother**, **MFC-XXXX** (where XXXX is your model name) from the program group, and then click **User's Guides in HTML format**.

If you have not installed the software, you can find the documentation by following the instructions below:

1. Turn on your PC.
   Insert the Brother CD-ROM labelled Windows® into your CD-ROM drive.

2. If the language selection screen appears, click your language.

3. If the model name screen appears, click your model name. The CD-ROM main menu will appear.

If this window does not appear, use Windows® Explorer to find and run the start.exe program from the root directory of the Brother CD-ROM.

4. Click **Documentation**.

5. Click the documentation you want to read:

   - HTML documents (2 manuals): **Software User's Guide** and **Network User's Guide** in HTML format.

     This format is recommended for viewing on your computer.

   - PDF documents (4 manuals):

     User's Guide for stand-alone operations, **Software User's Guide**, **Network User's Guide** and **Quick Setup Guide**.

     This format is recommended for printing the manuals. Click to go to the Brother Solutions Center, where you can view or download the PDF documents. (Internet access and PDF Reader software are required.)

How to find scanning instructions

There are several ways you can scan documents. You can find the instructions as follows:

Software User's Guide:

- Scanning a document using the TWAIN driver in Chapter 2
- Scanning a document using the WIA driver (Windows® XP/Windows Vista®) in Chapter 2
- Using ControlCenter3 in Chapter 3
- Network Scanning in Chapter 12

ScanSoft™ PaperPort™ 11SE with OCR How-to-Guides:

- The complete ScanSoft™ PaperPort™ 11SE with OCR How-to-Guides can be viewed from the Help selection in the ScanSoft™ PaperPort™ 11SE application.

How to find Network setup instructions

Your machine can be connected to a wireless or wired network. You can find basic setup instructions in the Quick Setup Guide. If your wireless access point supports SecureEasySetup™, Wi-Fi Protected Setup or AOSS™, follow the steps in the Quick Setup Guide. For more information about network setup please see the Network User's Guide.

Viewing documentation (Macintosh)

1. Turn on your Macintosh.
   Insert the Brother CD-ROM labelled Macintosh into your CD-ROM drive.
2. The following window will appear.

3. Double-click the **Documentation** icon.
4. Double-click your language folder.
5. Double-click **top.html** to view the **Software User's Guide** and **Network User's Guide** in HTML format.
6. Click the documentation you want to read.
   - **Software User's Guide**
   - **Network User's Guide**

Note

The documents are also available in PDF format (4 manuals): **User's Guide** for stand-alone operations, **Software User's Guide**, **Network User's Guide** and **Quick Setup Guide**. The PDF format is recommended for printing the manuals.

Double-click **Brother Solutions Center** icon to go to the Brother Solutions Center, where you can view or download the PDF documents. (Internet access and PDF Reader software are required.)

How to find scanning instructions

There are several ways you can scan documents. You can find the instructions as follows:

Software User's Guide:

- Scanning in Chapter 8
- Using ControlCenter2 in Chapter 9
- Network Scanning in Chapter 12

Presto! PageManager User's Guide:

- The complete Presto! PageManager User's Guide can be viewed from the Help selection in the Presto! PageManager application.

How to find Network setup instructions

Your machine can be connected to a wireless or wired network. You can find basic setup instructions in the Quick Setup Guide. If your wireless access point supports SecureEasySetup™, Wi-Fi Protected Setup or AOSS™, follow the steps in the Quick Setup Guide. For more information about network setup please see the Network User's Guide.

Accessing Brother Support (For Windows®)

You can find all the contacts you will need, such as Web support (Brother Solutions Center) and on the Brother CD-ROM.

- Click **Brother Support** on the main menu. The following screen will appear:

- To access our website (http://www.brother.com/), click **Brother Home Page**.
- For the latest news and product support information (http://solutions.brother.com/), click **Brother Solutions Center**.
- To visit our website for original Brother Supplies (http://www.brother.com/original/), click **Supplies Information**.
- To return to the main page, click **Back** or if you have finished, click **Exit**.

Control panel overview

MFC-9120CN and **MFC-9320CW** have similar keys.

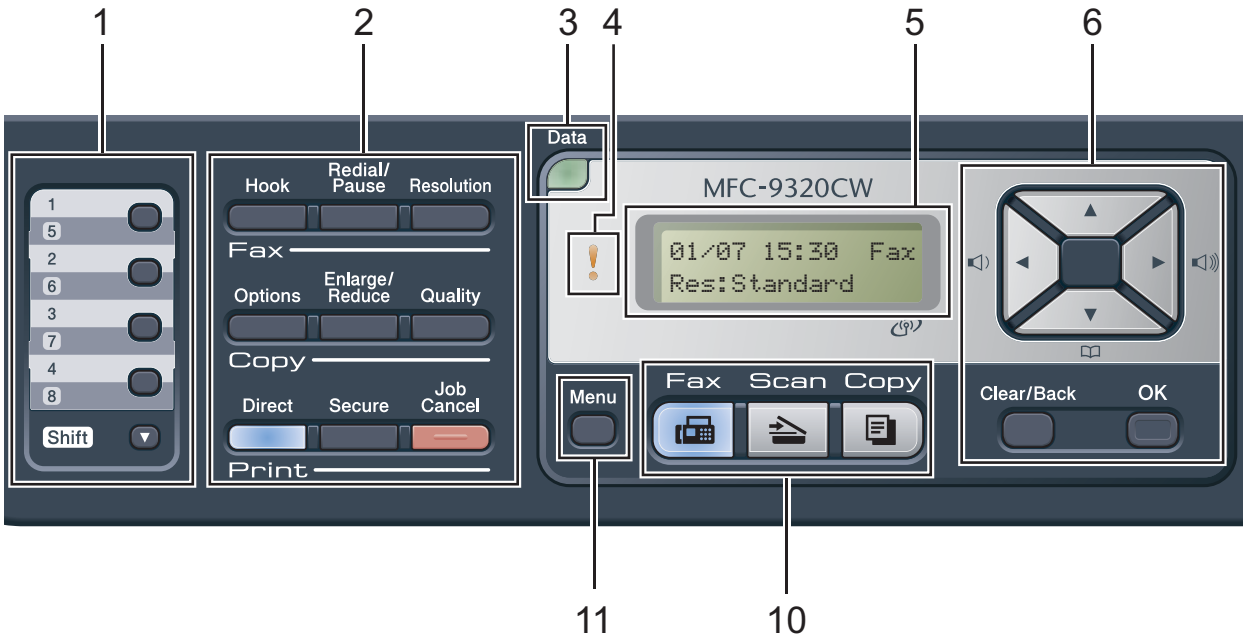

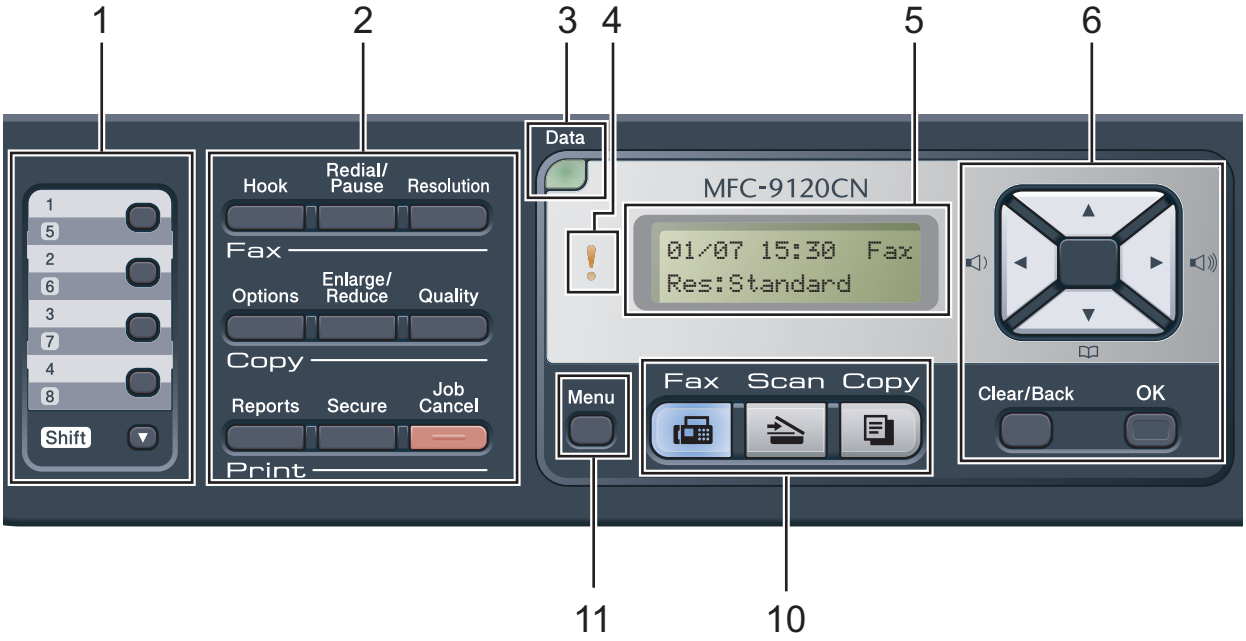

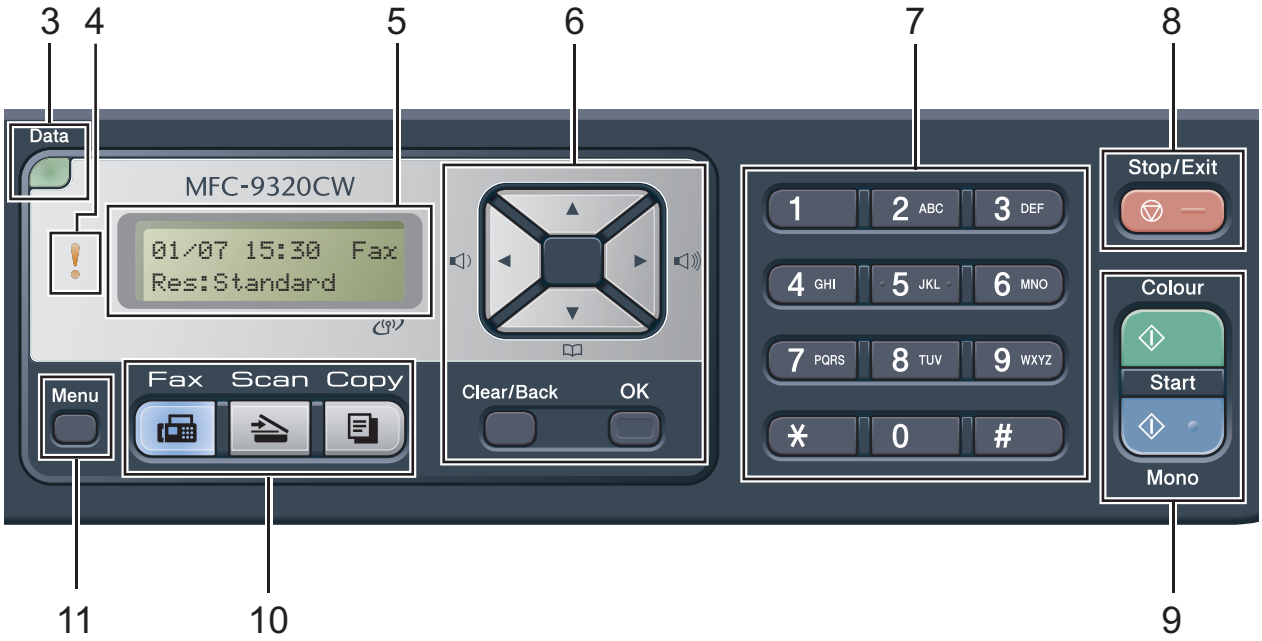
3
4
5
6
7
8
Data
MFC-9320CW
01/07 15:30 Fax
Res:Standard
Menu
Fax
Scan
Copy
Clear/Back
OK
1
2 ABC
3 DEF
4 GHI
5 JKL
6 MNO
7 PQRS
8 TUV
9 WXYZ
*
0
#
Stop/Exit
Colour
Start
Mono
11
10
9

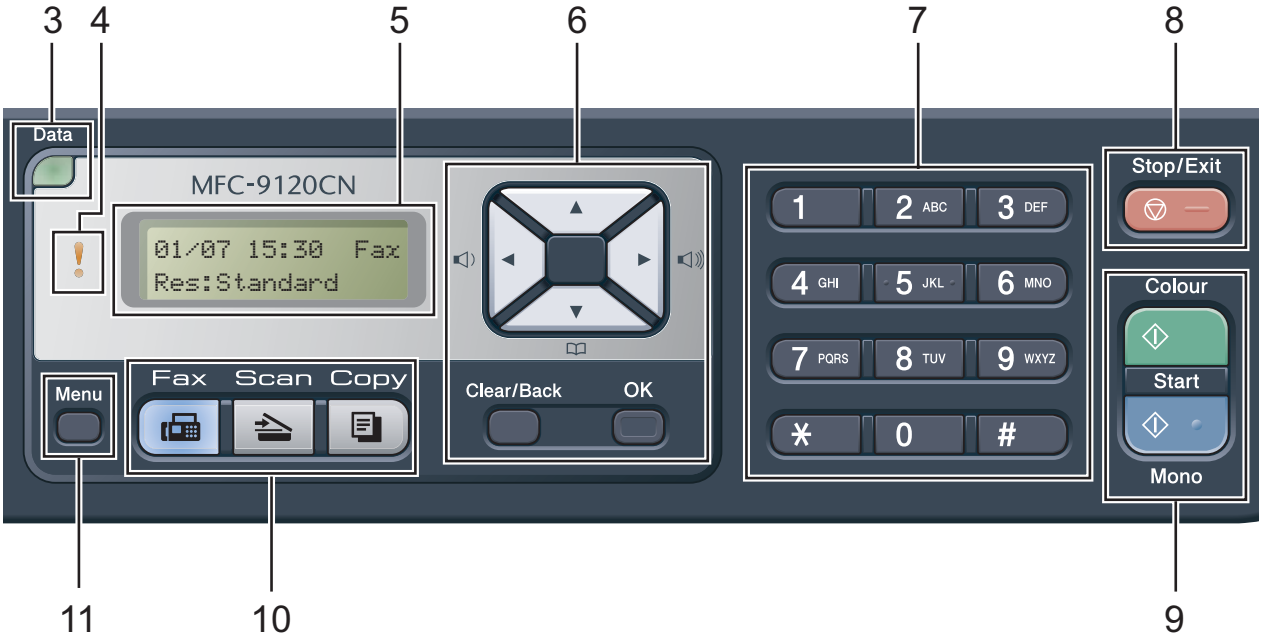
3
4
5
6
7
8
Data
MFC-9120CN
01/07 15:30 Fax
Res:Standard
Menu
Fax
Scan
Copy
Clear/Back
OK
1
2 ABC
3 DEF
4 GHI
5 JKL
6 MNO
7 PQRS
8 TUV
9 WXYZ
*
0
#
Stop/Exit
Colour
Start
Mono
11
10
9

1 **One Touch keys**

These 4 keys give you instant access to 8 previously stored numbers.

Shift

Lets you access One Touch numbers 5 to 8 when held down.

2 **Fax, Copy and Print keys**

Fax keys:

Hook

Press before dialing if you want to make sure a fax machine will answer, and then press **Start**. Also, press this key after you pick up the handset of an external telephone during the F/T ring (fast double-rings).

Redial/Pause

Redials the last number called. It also inserts a pause when programming quick dial numbers or when dialling a number manually.

Resolution

Sets the resolution when sending a fax.

Copy keys:

Options

You can quickly and easily choose temporary settings for copying.

Enlarge/Reduce

Reduces or enlarges copies.

Quality

Lets you change the quality for the next copy.

Print keys:

Direct (MFC-9320CW)

Lets you print data from a USB flash memory drive or PictBridge compatible camera directly to the machine.

(See *Printing photos from a digital camera (MFC-9320CW only)* on page 94.)

Reports (MFC-9120CN)

Print the Transmission Verification Reports, Help List, Tel Index List, Fax Journal, User Settings and Network Config.

Secure

You can print data saved in the memory when you enter your four-digit password. (For details about using the Secure key, see the *Software User's Guide* on the CD-ROM.)

(MFC-9320CW) When using Secure Function Lock, you can switch restricted users by holding down **Shift** as you press **Secure**. (See *Secure Function Lock 2.0 (MFC-9320CW only)* on page 29.)

Job Cancel

Cancels a programmed print job and clears it from the machine's memory. To cancel multiple print jobs, hold down this key until the LCD shows `Job Cancel (All)`.

3 **Data LED**

The LED will flash depending on the machine status.

4 **Error LED**

Blinks in orange when the LCD displays an error or an important status message.

5 **LCD**

Displays messages to help you set up and use your machine.

(MFC-9320CW only) A four level indicator shows the current wireless signal strength if you are using a wireless connection.

6 **Clear/Back**

Deletes entered data or lets you cancel the current setting.

OK

Lets you store your settings in the machine.

Volume keys:

◄ or ►

Press to scroll backwards or forwards through menu selections. Press to change the volume when in fax or standby mode.

▲ or ▼

Press to scroll through the menus and options.

Address Book:

▼

Lets you look up numbers that are stored in the dialling memory. It also allows you to dial stored numbers by pressing a three digit number.

7 Dial pad

Use these keys to dial telephone and fax numbers and as a keyboard for entering information into the machine.

The **#** key temporarily switches the dialling mode from Pulse to Tone during a telephone call (not available in New Zealand).

8 Stop/Exit

Stops an operation or exits from a menu.

9 Start:

Colour

Lets you start sending faxes or making copies in full colour.

Mono

Lets you start sending faxes or making copies in black and white.

10 Mode keys:

Fax

Puts the machine in Fax mode.

Scan

Puts the machine in Scan mode.

(For details about scanning, see the *Software User's Guide* on the CD-ROM.)

Copy

Puts the machine in Copy mode.

11 Menu

Lets you access the Menu to program your settings in this machine.

Data LED indications

The **Data** LED (light emitting diode) will flash depending on the machine's status.

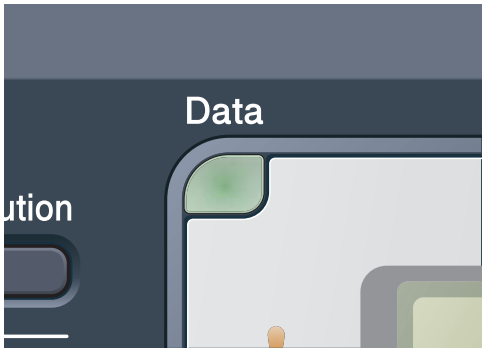

LED	Machine Status	Description
	Ready Mode	The machine is ready to print, in sleep mode, there is no print data, or the power switch is off.
Green (blinking)	Receiving Data	The machine is either receiving data from the computer, processing data in memory, or printing data.
Green	Data Remaining in Memory	Print data remains in the machine memory.

2 Loading paper and documents

Loading paper and print media

The machine can feed paper from the standard paper tray.

When you put paper into the paper tray, note the following:

- If your application software supports paper size selection on the print menu, you can select it through the software. If your application software does not support it, you can set the paper size in the printer driver or by using the control panel buttons.

Loading paper in the standard paper tray

Printing on plain paper, thin paper or recycled paper from the paper tray

1. Pull the paper tray completely out of the machine.

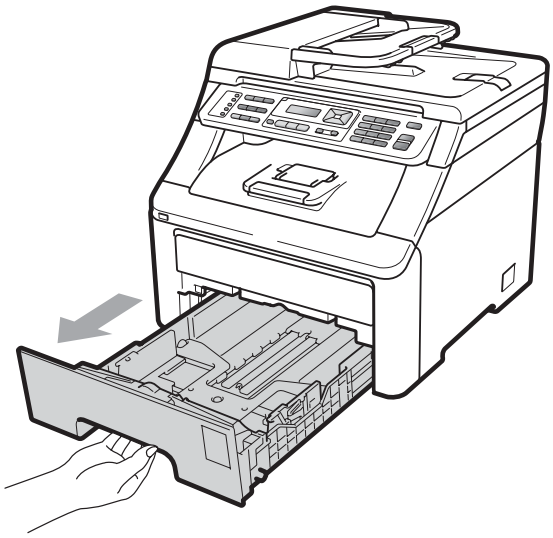

2. While pressing the green paper-guide release lever (1), slide the paper guides to fit the paper size you are loading in the tray. Make sure that the guides are firmly in the slots.

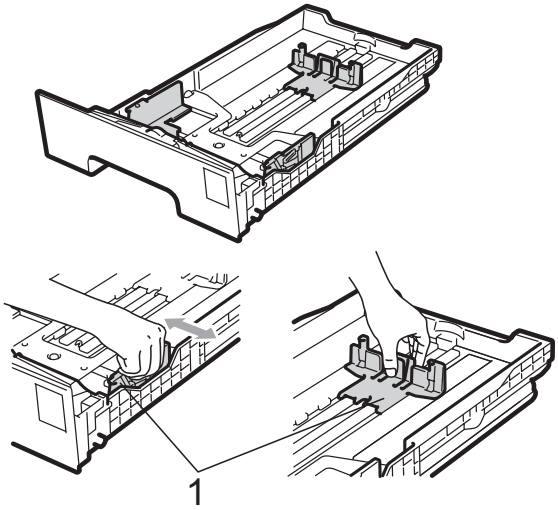

Note

For Legal and Folio size paper, press the release button (1) in the bottom of the paper tray and then pull out the back of the paper tray. (Legal or Folio size paper is not available in some regions.)

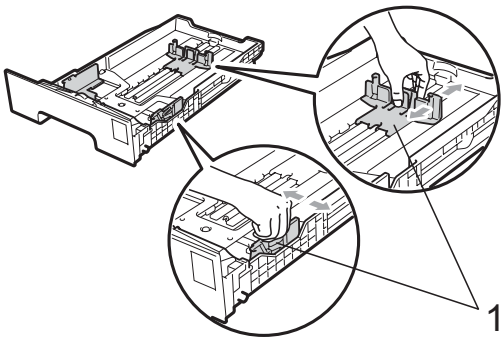

3 Fan the stack of paper well to avoid paper jams and misfeeds.

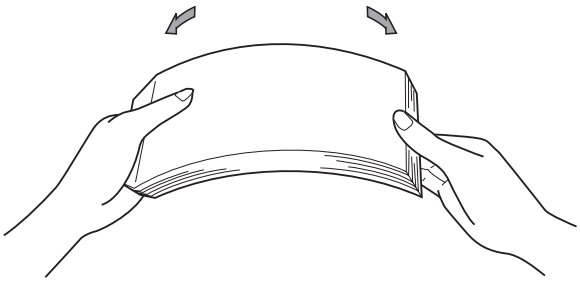

4 Put paper in the tray, and make sure that the paper is below the maximum paper mark (1). The side to be printed on must be face down.

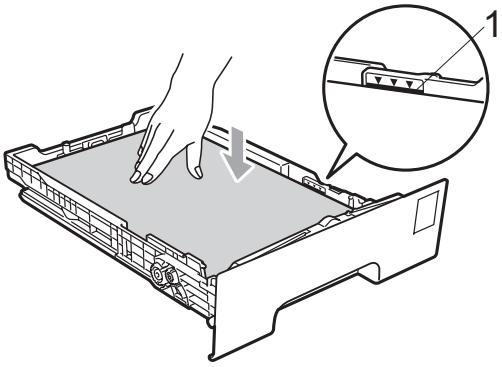

IMPORTANT

Make sure the paper guides touch the sides of the paper so it will feed correctly. If you do not do this, it may cause damage to your machine.

5 Put the paper tray firmly back in the machine. Make sure that it is completely inserted into the machine.

6 Lift up the support flap (1) to prevent paper from sliding off the face-down output tray or remove each page as soon as it comes out of the machine.

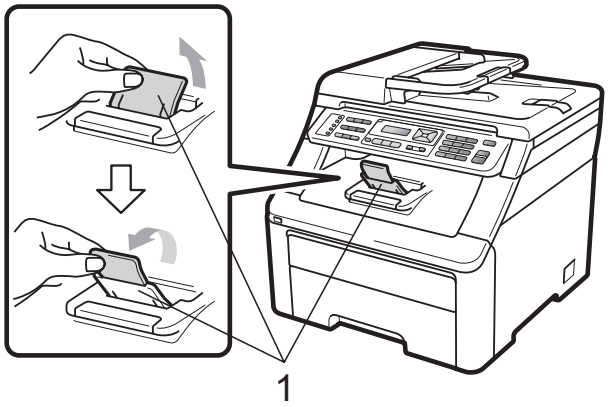

Loading paper in the manual feed slot

You can load envelopes and special print media one at a time into this slot. Use the manual feed slot to print or copy on labels, envelopes or thicker paper.

Printing on plain paper, recycled paper or bond paper from the manual feed slot

Before loading, press the corners and sides of the envelopes to make them as flat as possible.

Note

The machine automatically turns on the Manual Feed mode when you put paper in the manual feed slot.

1. Lift up the support flap (1) to prevent paper from sliding off the face-down output tray or remove each page as soon as it comes out of the machine.

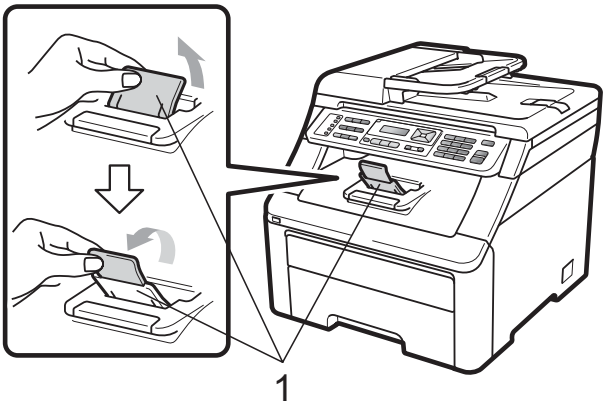

2. Open the manual feed slot cover.

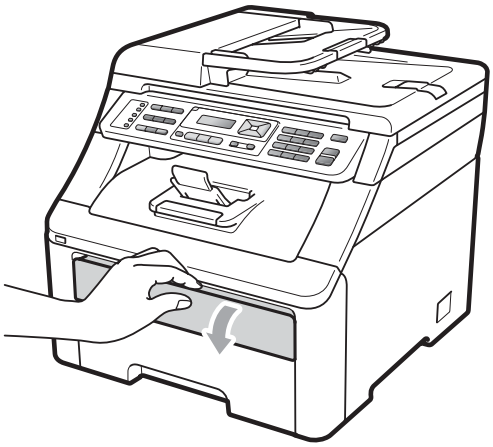

3. Using both hands, slide the manual feed slot paper guides to the width of the paper that you are going to use.

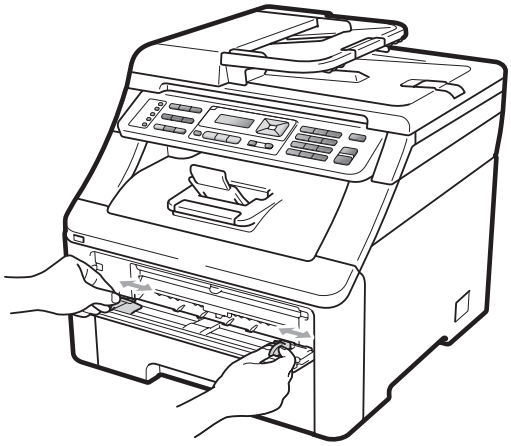

4. Using both hands, put one piece of paper in the manual feed slot with the print side face up until the front edge of the paper touches the paper feed roller. Wait until the machine automatically feeds the paper. When you feel the machine pull in the paper, let go.

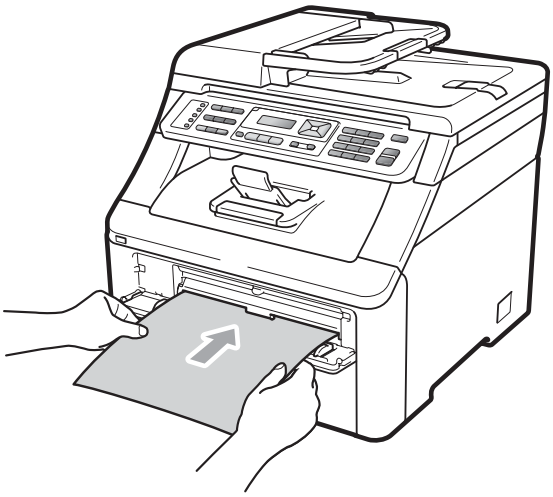

Printing on thick paper, labels, envelopes or small paper

When the back output tray is pulled down, the machine has a straight paper path from the manual feed slot through to the back of the machine. Use this paper feed and output method when you want to print on thick paper, labels, envelopes, or paper that is smaller than 105 × 148 mm (or A6 size).

Note

- Remove each printed sheet or envelope immediately to prevent a paper jam.
- The machine automatically turns on the Manual Feed mode when you put paper in the manual feed slot.

1 Open the back cover (back output tray).

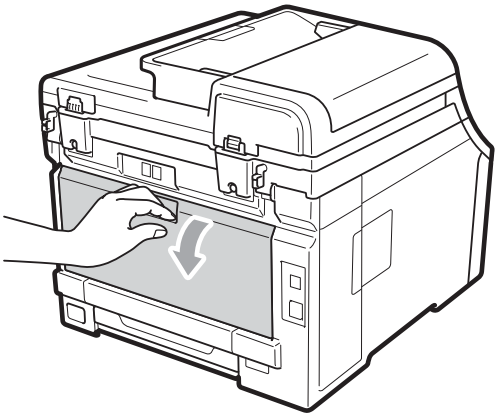

2 <For printing envelopes only>
Pull down the two grey levers, one on the left-hand side and one on the right-hand side, toward you as shown in the illustration below.

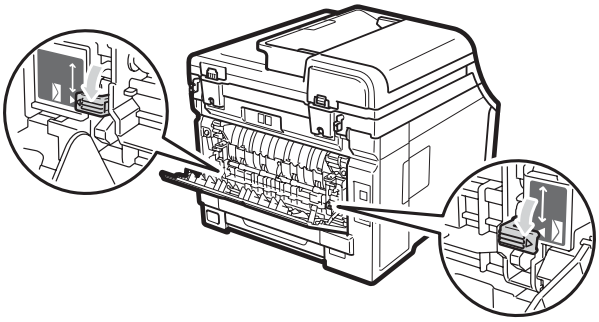

3 Open the manual feed slot cover.

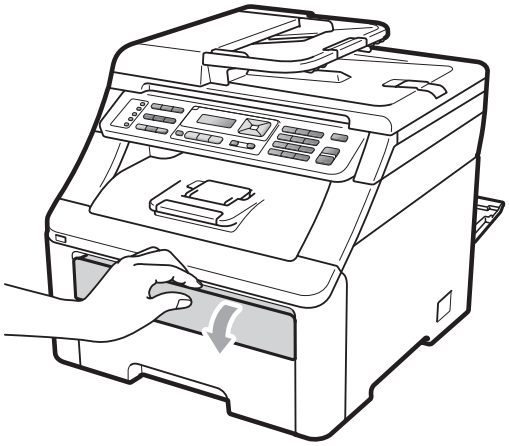

4 Using both hands, slide the manual feed slot paper guides to the width of the paper that you are going to use.

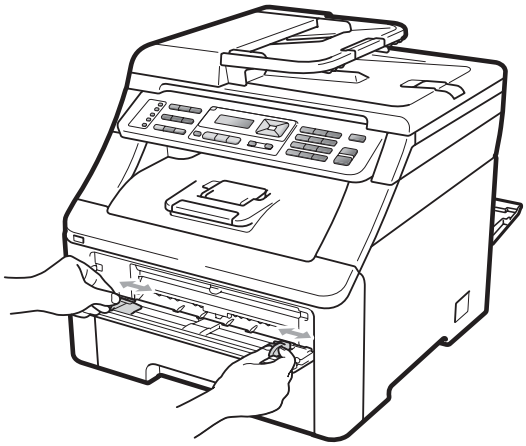

5 Using both hands, put one sheet of paper or one envelope in the manual feed slot until the front edge of the paper or envelope touches the paper feed roller. When you feel the machine pull in the paper, let go.

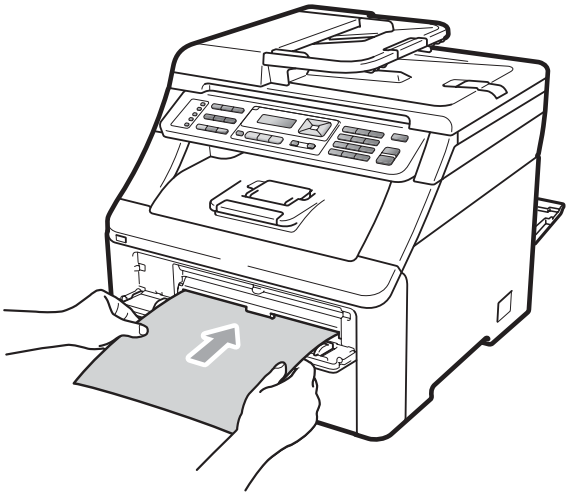

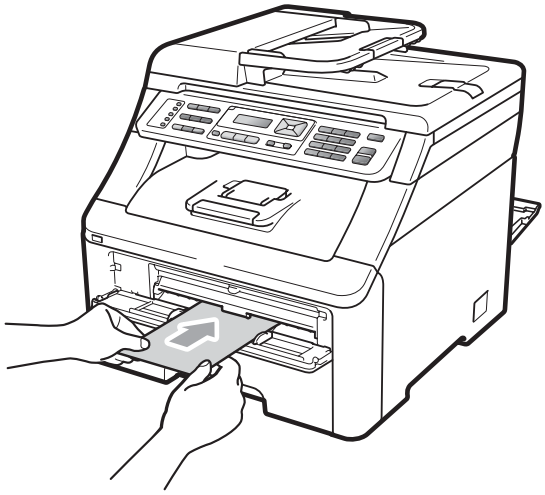

Note

- Put the paper into the manual feed slot with the side to be printed face up.
- Make sure that the paper or print media (see *Acceptable paper and other print media* on page 17) is straight and in the correct position on the manual feed slot. If it is not, the paper may not be fed correctly, resulting in a skewed printout or a paper jam.
- Do not put more than one sheet of paper in the manual feed slot at any one time, as it may cause a jam.
- Pull the paper out completely when you retry putting the paper into the manual feed slot.
- If you put paper or other print media in the manual feed slot before the machine is in the Ready mode, an error may occur and the machine will stop printing.
- To easily remove a small printout from the output tray, lift up the scanner by using both hands as shown in the illustration.

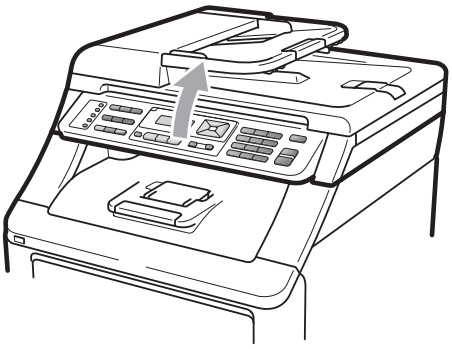

- You can still use the machine while the scanner is up. To close the scanner, push it down with both hands.

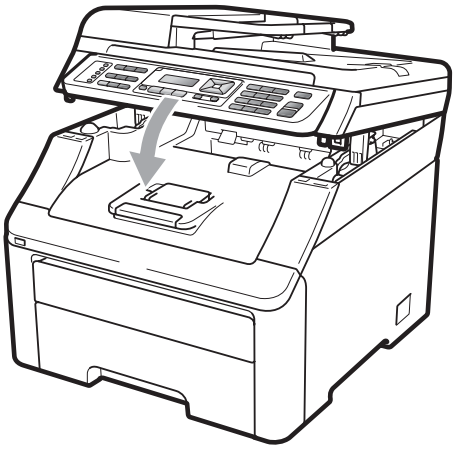

- When the top cover is open, you cannot open the scanner.

Unprintable area

Unprintable area for faxes and copies

The figures below show unprintable areas.

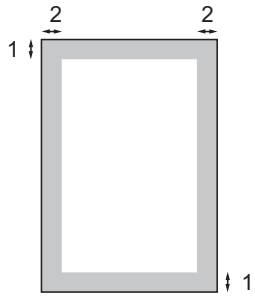

Usage	Document Size	Top (1) Bottom (1)	Left (2) Right (2)
Fax	Letter	4 mm	3.95 mm
	A4	4 mm	1 mm
Copy	Letter	4 mm	4 mm
	A4	4 mm	3 mm

Note

(For copies) This unprintable area shown above is for a single copy or a 1 in 1 copy using A4 size paper. The area that cannot be printed on will vary by paper size.

Unprintable area when printing from a computer

When using the printer driver the printable area is smaller than the paper size, as shown below.

Portrait

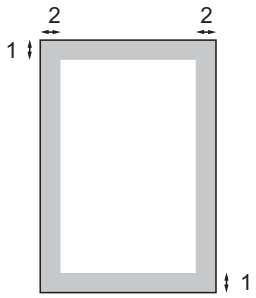

Landscape

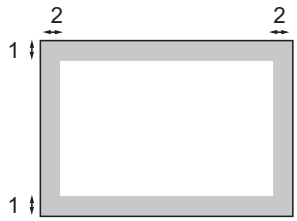

	Windows® printer driver and Macintosh printer driver BRScript Driver for Windows® and Macintosh
1	4.23 mm
2	4.23 mm

Note

The area that cannot be printed on may vary depending on the paper size and the printer driver you are using. The unprintable area shown above is for A4 size paper.

Acceptable paper and other print media

Print quality may vary according to the type of paper you are using.

You can use the following types of print media: thin paper, plain paper, thick paper, bond paper, recycled paper, labels or envelopes.

For best results, follow the instructions below:

- Use paper made for plain paper copying.
- Use paper that is 75 to 90 gsm.
- DO NOT put different types of paper in the paper tray at the same time because it may cause paper jams or misfeeds.
- For correct printing, you must choose the same paper size from your software application as the paper in the tray.
- Avoid touching the printed surface of the paper immediately after printing.
- Use long grain paper with a neutral Ph value, and a moisture content of approx. 5%.

Type and size of paper

The machine loads paper from the installed standard paper tray or manual feed slot.

Standard paper tray

Since the standard paper tray is a universal type, you can use any of the paper sizes (one paper type and size at a time) listed in the table in *Paper capacity of the paper trays* on page 18. The standard paper tray can hold up to 250 sheets of Letter/A4, Legal or Folio size paper (80 gsm). Paper can be loaded up to the maximum paper mark on the sliding paper width guide.

Manual feed slot

The manual feed slot can hold a sheet with a size of 76.2 to 220 mm wide and 116 to 406.4 mm long. You can use the manual feed slot if you are using special paper, envelopes or labels.

The name for the paper trays in the printer driver in this Guide are as follows:

Tray and slot	Name
Standard paper tray	Tray
Manual feed slot	Manual Feed

Paper capacity of the paper trays

	Paper size	Paper types	No. of sheets
Paper Tray	A4, Letter, Legal [1], Executive, A5, A5 (Long Edge), A6, B5 (ISO), B6 (ISO) and Folio [1 2].	Plain paper, Thin paper and Recycled paper	up to 250 [80 gsm]
Manual feed slot (Manual Feed)	Width: 76.2 to 220 mm Length: 116 to 406.4 mm	Plain paper, Thin paper, Thick paper, Thicker paper, Bond paper, Recycled paper, Envelopes and Labels.	1 sheet [80 gsm] 1 Envelope

[1] Legal or Folio size paper are not available in some regions.

[2] Folio size is 215.9 mm x 330.2 mm.

Recommended paper specifications

The following paper specifications are suitable for this machine.

Basis weight	75-90 gsm
Thickness	80-110 μm
Roughness	Higher than 20 sec.
Stiffness	90-150 cm^3/100
Grain direction	Long grain
Volume resistivity	$10e^9$-$10e^{11}$ ohm
Surface resistivity	$10e^9$-$10e^{12}$ ohm-cm
Filler	$CaCO_3$ (Neutral)
Ash content	Below 23 wt%
Brightness	Higher than 80%
Opacity	Higher than 85%

Handling and using special paper

The machine is designed to work well with most types of xerographic and bond paper. However, some paper variables may have an effect on print quality or handling reliability. Always test samples of paper before purchasing to ensure desirable performance. Store paper in its original packaging and keep it sealed. Keep the paper flat and away from moisture, direct sunlight and heat.

Some important guidelines when selecting paper are:

- DO NOT use inkjet paper because it may cause a paper jam or damage your machine.
- Preprinted paper must use ink that can withstand the temperature of the machine's fusing process (200 degrees centigrade).
- If you use bond paper, paper having a rough surface or paper that is wrinkled or creased, the paper may exhibit degraded performance.

Types of paper to avoid

IMPORTANT

Some types of paper may not perform well or may cause damage to your machine.

DO NOT use paper:

- that is highly textured
- that is extremely smooth or shiny
- that is curled or warped

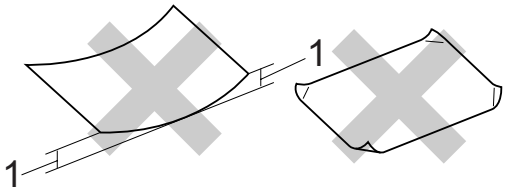

1 2 mm or greater curl may cause jams to occur.

- that is coated or has a chemical finish
- that is damaged, creased or folded
- that exceeds the recommended weight specification in this guide
- with tabs and staples
- with letterheads using low temperature dyes or thermography
- that is multipart or carbonless
- that is designed for inkjet printing

If you use any of the types of paper listed they may damage your machine. This damage is not covered under any Brother warranty or service agreement.

Envelopes

Most envelopes will be suitable for your machine. However, some envelopes may have feed and print-quality problems because of the way they have been made. A suitable envelope should have edges with straight, well-creased folds and the leading edge should not be thicker than two sheets of paper. The envelope should lie flat and not be of baggy or flimsy construction. You should buy quality envelopes from a supplier who understands that you will be using the envelopes in a laser machine.

Envelopes can only be fed from the Manual feed slot. We recommend that you print a test envelope to make sure the print results are what you want before you print or purchase a large quantity of envelopes.

Check the following:

- Envelopes should have a lengthwise sealing flap.
- The sealing flaps should be folded crisply and correctly (irregularly cut or folded envelopes may cause paper jams).
- Envelopes should consist of two layers of paper in the area circled in the figure below.

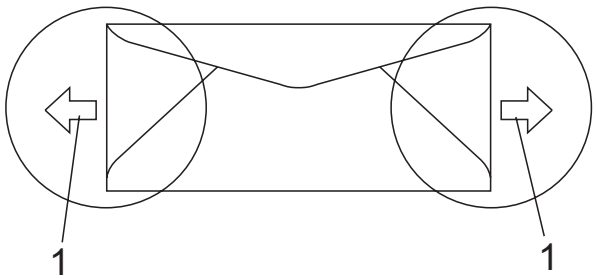

1 Feeding direction

- Envelope joints that are sealed by the manufacturer should be secure.
- We recommend that you do not print within 15 mm of the edges of envelopes.

Types of envelopes to avoid

IMPORTANT

DO NOT use envelopes:

- that are damaged, curled, wrinkled or an unusual shape
- that are extremely shiny or textured
- with clasps, staples, snaps or tie strings
- with self-adhesive closures
- that are of a baggy construction
- that are not sharply creased
- that are embossed (have raised writing on them)
- that were previously printed by a laser/LED machine
- that are pre-printed on the inside
- that cannot be arranged neatly when stacked
- that are made of paper that weighs more than the paper weight specifications for the machine
- with edges that are not straight or consistently square
- with windows, holes, cut-outs or perforations
- with glue on surface as shown in figure below

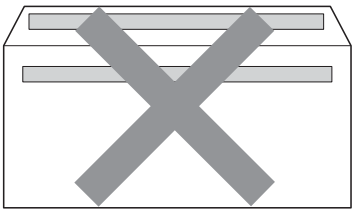

- with double flaps as shown in figure below

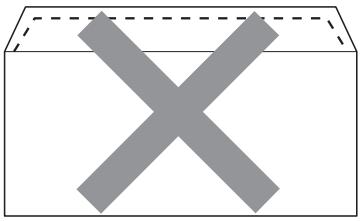

- with sealing flaps that have not been folded at purchase
- with sealing flaps as shown below

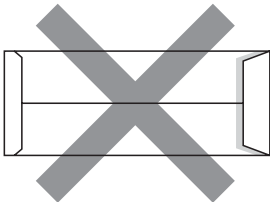

- with each side folded as shown below

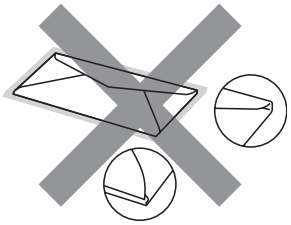

If you use any of the types of envelopes listed above, they may damage your machine. This damage may not be covered under any Brother warranty or service agreement.

Occasionally you may experience paper feed problems caused by the thickness, size and flap shape of the envelopes you are using.

Labels

The machine will print on most types of labels designed for use with a laser machine. Labels should have an adhesive that is acrylic-based since this material is more stable at the high temperatures in the fuser unit. Adhesives should not come in contact with any part of the machine, because the label stock may stick to the drum unit or rollers and cause jams and print quality problems. No adhesive should be exposed between the labels. Labels should be arranged so that they cover the entire length and width of the sheet. Using labels with spaces may result in labels peeling off and causing serious jams or print problems.

All labels used in this machine must be able to withstand a temperature of 200 degrees centigrade for a period of 0.1 seconds.

Label sheets should not exceed the paper weight specifications described in this User's Guide. Labels exceeding this specification may not feed or print correctly and may cause damage to your machine.

Labels must be fed from the manual feed slot only.

Types of labels to avoid

Do not use labels that are damaged, curled, wrinkled or an unusual shape.

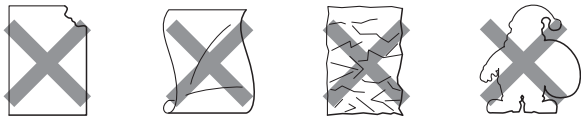

IMPORTANT

DO NOT feed part used label sheets. The exposed carrier sheet will damage your machine.

Loading documents

Using the automatic document feeder (ADF)

The ADF can hold up to 35 pages and feeds each sheet individually. Use standard 80 gsm paper and always fan the pages before putting them in the ADF.

IMPORTANT

- DO NOT leave thick documents on the scanner glass (Flatbed). If you do this, the ADF may jam.
- DO NOT use paper that is curled, wrinkled, folded, ripped, stapled, paper-clipped, pasted or taped.
- DO NOT use cardboard, newspaper or fabric with the ADF. Instead use the scanner glass.
- To avoid damaging your machine while using the ADF, DO NOT pull on the document while it is feeding.

Note

To scan documents that are not suitable for the ADF, see *Using the scanner glass (Flatbed)* on page 23.

- Make sure documents with correction fluid or written with ink are completely dry.
- Documents to be faxed must be from 147.3 to 215.9 mm wide and from 147.3 to 356 mm long, and of a standard weight [80 gsm].

1. Unfold the ADF document output support flap (1) and the ADF support flap (2).

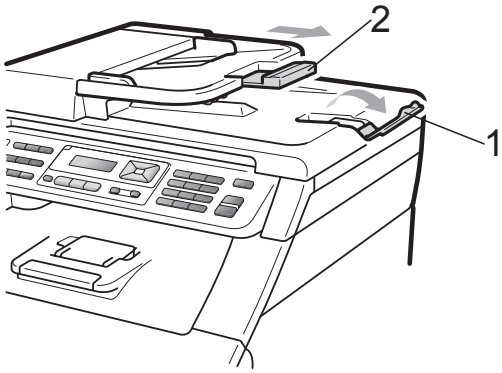

2. Fan the pages well.
3. Place your document **face up, top edge first** in the ADF until the LCD display message changes and you feel it touch the feed rollers.
4. Adjust the paper guides (1) to fit the width of your document.

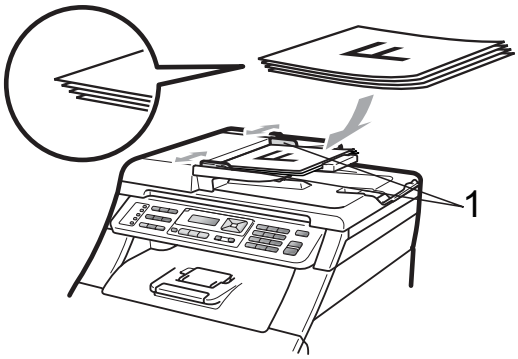

Using the scanner glass (Flatbed)

You can use the scanner glass to fax, copy or scan pages of a book one page at a time.

Documents can be up to 215.9 mm wide and 297 mm long.

Note

To use the scanner glass, the ADF must be empty.

1. Lift the document cover.
2. Using the document guidelines on the left and top, place the document face down in the upper left corner of the scanner glass.

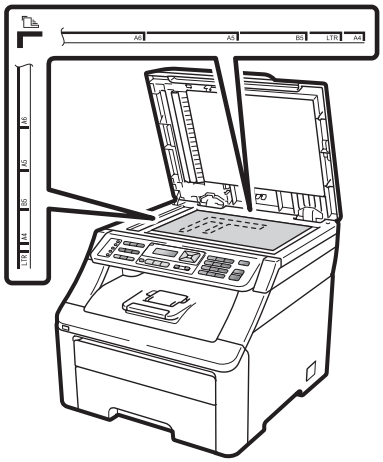

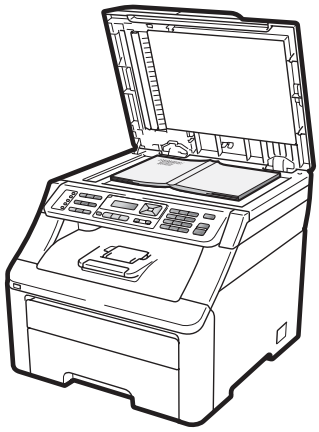

3. Close the document cover.

IMPORTANT

If the document is a book or is thick do not slam the cover or press on it.

3 General Setup

Mode Timer

The machine has three mode keys on the control panel: **Fax**, **Scan**, and **Copy**.

You can set how much time the machine takes after the last Copy or Scan operation to return to Fax mode default. If you choose `Off`, the machine will stay in the mode you used last.

This setting also sets the time the machine will change from individual user to the Public mode when using Secure Function Lock. (See *Switching Users* on page 32.)

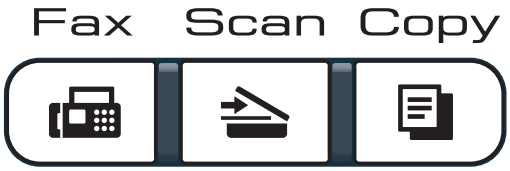

1. Press **Menu**, **1**, **1**.
2. Press ▲ or ▼ to choose `0 Sec`, `30 Secs`, `1 Min`, `2 Mins`, `5 Mins` or `Off`.
   Press **OK**.
3. Press **Stop/Exit**.

Paper settings

Paper Type

Set up the machine for the type of paper you are using. This will give you the best print quality.

1. Press **Menu**, **1**, **2**, **1**.
2. Press ▲ or ▼ to choose `Thin`, `Plain`, `Thick`, `Thicker` or `Recycled Paper`.
   Press **OK**.
3. Press **Stop/Exit**.

Paper Size

You can use ten sizes of paper for printing copies: A4, Letter, Legal, Executive, A5, A5 L, A6, B5, B6 and Folio.

When you change the size of paper in the tray, you will also need to change the setting for paper size at the same time so your machine can fit the document or an incoming fax on the page.

1. Press **Menu**, **1**, **2**, **2**.
2. Press ▲ or ▼ to choose `A4`, `Letter`, `Legal`, `Executive`, `A5`, `A5 L`, `A6`, `B5`, `B6` or `Folio`.
   Press **OK**.
3. Press **Stop/Exit**.

Volume settings

Ring volume

You can choose a range of ring volume levels, from `High` to `Off`.

While in Fax mode press ◁) or ◁)) to adjust the volume level. The LCD will show the current setting, and each key press will change the volume to the next level. The machine will keep the new setting until you change it.

You can also change the ring volume through the menu:

1. Press **Menu**, **1**, **3**, **1**.
2. Press ▲ or ▼ to choose `Off`, `Low`, `Med` or `High`.
   Press **OK**.
3. Press **Stop/Exit**.

Beeper volume

When the beeper is on, the machine will beep when you press a key, make a mistake, or after you send or receive a fax. You can choose a range of volume levels, from `High` to `Off`.

1. Press **Menu**, **1**, **3**, **2**.
2. Press ▲ or ▼ to choose `Off`, `Low`, `Med` or `High`.
   Press **OK**.
3. Press **Stop/Exit**.

Speaker volume

You can choose a range of speaker volume levels, from `High` to `Off`.

1. Press **Menu**, **1**, **3**, **3**.
2. Press ▲ or ▼ to choose `Off`, `Low`, `Med` or `High`.
   Press **OK**.
3. Press **Stop/Exit**.

Set Daylight Saving Time

You can set the machine to change for Daylight Saving Time. If you choose On, it will reset the time forward one hour and if you choose Off, it will reset the time backward one hour.

1. Press **Menu**, **1**, **4**.
2. Press ▲ or ▼ to choose On or Off. Press **OK**.
3. Press **Stop/Exit**.

Ecology features

Toner Save

You can save toner using this feature. When you set Toner Save to On, prints appear lighter. The default setting is Off.

1. Press **Menu**, **1**, **5**, **1**.
2. Press ▲ or ▼ to choose On or Off. Press **OK**.
3. Press **Stop/Exit**.

Note

We do not recommend Toner Save for printing Photo or Greyscale images.

Sleep Time

The Sleep Time setting can reduce power consumption by turning off the fuser while the machine is idle.

You can choose how long the machine must be idle before it goes into sleep mode. When the machine receives a fax, computer data, or makes a copy, the timer will be reset. The default setting is 005 minutes.

While the machine is in sleep mode the LCD will display Sleep. When printing or copying in sleep mode, there will be a short delay while the fuser warms up.

1. Press **Menu**, **1**, **5**, **2**.
2. Enter the length of time the machine is idle before entering sleep mode. Press **OK**.
3. Press **Stop/Exit**.

LCD Contrast

You can change the contrast to make the LCD look lighter or darker.

1. Press **Menu**, **1**, **6**.
2. Press ▲ to make the LCD darker. Or, press ▼ to make the LCD lighter. Press **OK**.
3. Press **Stop/Exit**.

Dial Prefix

The Dial Prefix setting will automatically dial a predefined number before every fax number you dial. For example: If your telephone system requires a 9 to dial an outside number use this setting to automatically dial 9 for every fax you send.

Setting up the prefix number

1. (for New Zealand) Press **Menu**, **0**, **5**. Press **Menu**, **0**, **6**.
2. Enter the prefix number (up to 5 digits) on the dial pad. Press **OK**.

Note

- You can use the numbers 0 to 9, #, ∗ and !. (Press **Hook** to display “!”.)

  You cannot use ! with any other numbers or characters.

  If your telephone system requires a timed break recall (hookflash), press **Hook** to enter the break.
- (Not available in New Zealand) If the pulse dialing mode is on, # and ∗ are not available to use.

3. Press **Stop/Exit**.

Changing the prefix number

1. (for New Zealand) Press **Menu**, **0**, **5**.
   Press **Menu**, **0**, **6**.
2. Do one of the following:
   - To change the prefix number, press **1**.
   - To exit without making a change, press **2**. Go to step ❹.
3. Enter a new prefix number using the dial pad (up to 5 digits), press **OK**.
4. Press **Stop/Exit**.

4 Security features

Secure Function Lock 2.0 (MFC-9320CW only)

Secure Function Lock lets you restrict Public access to the following machine functions:

- Fax Tx
- Fax Rx
- Copy
- Scan
- USB Direct
- PC Print
- Color Print

This feature also prevents users from changing the Default settings of the machine by limiting access to the Menu settings.

Before using the security features you must first enter an administrator password.

Access to restricted operations can be enabled by creating a restricted user. Restricted users must enter a user password to use the machine.

Make a careful note of your password. If you forget it, you will have to reset the password stored in the machine. For information about how to reset the password call your Brother dealer for service.

Note

- Secure Function Lock can be set manually at the control panel or by using Web Based Management. We recommend using Web Based Management to configure this feature. For more information, see the *Network User's Guide* on the CD-ROM.
- Only administrators can set limitations and make changes for each user.
- When Secure Function Lock is on, you can only use `1.Contrast` and `6.Polled TX`, `7.Coverpg Setup` under `2.Setup Send` in the Fax menu.

  If Fax Tx is `Off`, you cannot use any function in the Fax menu.
- Polling Receive is `On` only when both Fax Tx and Fax Rx are `On`.

Setting the password for the administrator

The password you set in these steps is for the administrator. This password is used to set up users and to turn Secure Function Lock on or off. (See *Setting up restricted users* on page 31 and *Turning Secure Function Lock on/off* on page 31.)

1. Press **Menu**, **1**, **7**, **1**.
2. Enter a four-digit number for the password using numbers 0–9.
   Press **OK**.
3. Re-enter the password when the LCD shows `Verify:`.
   Press **OK**.
4. Press **Stop/Exit**.

Changing the password for the administrator

1. Press **Menu**, **1**, **7**, **1**.

```
Security
1.Function Lock
```

2. Press ▲ or ▼ to choose `Set Password`.
   Press **OK**.
3. Enter the registered four-digit password.
   Press **OK**.
4. Enter a four-digit number for the new password.
   Press **OK**.
5. If the LCD shows `Verify:` re-enter the new password.
   Press **OK**.
6. Press **Stop/Exit**.

Setting up the public user mode

Public user mode restricts the functions that are available for Public users. Public users do not need to enter a password to access the features made available through this setting. You can set up one Public user.

1. Press **Menu**, **1**, **7**, **1**.
2. Press ▲ or ▼ to choose `Setup ID`.
   Press **OK**.
3. Enter the administrator password.
   Press **OK**.
4. Press ▲ or ▼ to choose `Public`.
   Press **OK**.
5. Press ▲ or ▼ to choose `On` or `Off` for `Fax Tx`.
   Press **OK**.
   After you have set `Fax Tx`, repeat this step for `Fax Rx`, `Copy`, `Scan`, `USB Direct`, `PC Print` and `Color Print`. When the LCD shows `Exit`, press **OK**.
6. Press **Stop/Exit**.

Setting up restricted users

You can set up users with restrictions and a password for functions that are available to them. You can set up more advanced restrictions, such as by page count or PC user login name, through Web Based Management. (For more information, see the *Network User's Guide* on the CD-ROM.) You can set up to 25 restricted users with restrictions and a password.

1. Press **Menu**, **1**, **7**, **1**.
2. Press ▲ or ▼ to choose `Setup ID`.
   Press **OK**.
3. Enter the administrator password.
   Press **OK**.
4. Press ▲ or ▼ to choose `User01`.
   Press **OK**.
5. Use the numeric keys to enter the user name. (See *Entering text* on page 213.)
   Press **OK**.
6. Enter a four-digit password for the user.
   Press **OK**.
7. Press ▲ or ▼ to choose `On` or `Off` for `Fax Tx`.
   Press **OK**.
   After you have set `Fax Tx`, repeat this step for `Fax Rx`, `Copy`, `Scan`, `USB Direct`, `PC Print` and `Color Print`. When the LCD shows `Exit`, press **OK**.
8. Repeat steps ❹ to ❼ for entering each additional user and password.
9. Press **Stop/Exit**.

Note

You cannot use the same name as another user's name.

Turning Secure Function Lock on/off

If you enter the wrong password, the LCD will show `Wrong Password`. Re-enter the correct password.

Turning **Secure Function Lock** on

1. Press **Menu**, **1**, **7**, **1**.
2. Press ▲ or ▼ to choose `Lock Off→On`.
   Press **OK**.
3. Enter your four-digit administrator password.
   Press **OK**.

Turning **Secure Function Lock** off

1. Press **Menu**, **1**, **7**, **1**.
2. Press ▲ or ▼ to choose `Lock On→Off`.
   Press **OK**.
3. Enter your four-digit administrator password.
   Press **OK**.

Switching Users

This setting allows you to switch between registered restricted users or Public mode when Secure Function Lock is turned on.

Changing to the restricted user Mode

1. Hold down **Shift** as you press **Secure**.
2. Press ▲ or ▼ to choose your name. Press **OK**.
3. Enter your four-digit password. Press **OK**.

Note

If you press a Mode key that is restricted, `Access Denied` will appear on the LCD and then the machine will ask your name. If you are a restricted user with access to this Mode, press ▲ or ▼ to choose your name and enter your four-digit password.

Changing to the Public Mode

After a restricted user has finished using the machine, it will return to the Public setting within the same time as the Mode Timer setting (**Menu**, **1**, **1**). (See *Mode Timer* on page 24.) You can also exit from the restricted user mode by pressing the current Mode key you are in. Then LCD will ask you `Go to Public?`.

Press **1** to choose `1.Yes`.

Memory Security (MFC-9120CN only)

Memory Security lets you prevent unauthorized access to the machine.

While Memory Security is on, the following operations are available:

- Receiving faxes into memory (limited by memory capacity)
- Fax Forwarding (if Fax Forwarding was already on)
- Remote Retrieval (if Fax Storage was already on)

While Memory Security is on, the following operations are NOT available:

- Printing received faxes
- Sending faxes
- Copying
- PC printing
- Scanning
- PC Fax Receive

Note

- To print the faxes in memory, turn off Memory Security.
- You must turn off PC Fax Receive before you can turn on Memory Security. (See *Turning off Remote Fax Options* on page 75.)

Setting up the password

Note

- If you have already set the password, you will not need to set it, again.
- If you forget the Memory Security password, please call your Brother dealer.

1. Press **Menu**, **1**, **7**, **1**.

```
Security
1.Mem Security
```

2. Enter a four-digit number for the password using numbers 0–9.
   Press **OK**.
3. Re-enter the password when the LCD shows `Verify:`.
   Press **OK**.
4. Press **Stop/Exit**.

Changing your memory security password

1. Press **Menu**, **1**, **7**, **1**.

```
Security
1.Mem Security
```

2. Press ▲ or ▼ to choose `Set Password`.
   Press **OK**.
3. Enter your four-digit password.
   Press **OK**.
4. Enter a four-digit number for the new password.
   Press **OK**.
5. Re-enter the password when the LCD shows `Verify:`.
   Press **OK**.
6. Press **Stop/Exit**.

Turning memory security on/off

If you enter the wrong password when following the instructions below, the LCD will show `Wrong Password`. Re-enter the correct password.

Turning memory security on

1. Press **Menu**, **1**, **7**, **1**.

```
Security
1.Mem Security
```

2. Press ▲ or ▼ to choose `Set Security`.
   Press **OK**.
3. Enter your registered four-digit password.
   Press **OK**.
   The machine goes offline and the LCD shows `Secure Mode`.

Note

If there is a power failure faxes will remain in memory for up to 60 hours.

Turning memory security off

1. Press **Menu**.
   Enter the registered four-digit password.
   Press **OK**.
2. Memory Security is automatically turned off and the LCD shows the date and time.

Note

If you enter the wrong password, the LCD shows `Wrong Password` and stays offline. The machine will stay in Secure Mode until the registered password is entered.

Setting Lock

Setting Lock lets you set a password to stop other people from accidentally changing your machine settings.

Make a careful note of your password. If you forget it, you will have to reset the passwords stored in the machine. Please call your administrator or your Brother dealer.

While Setting Lock is `On`, you cannot change the following settings without a password:

- Date/Time
- Station ID
- Quick Dial settings
- Mode Timer
- Paper Type
- Paper Size
- Volume
- Daylight Save
- Ecology
- LCD Contrast
- Setting Lock
- Secure Function Lock (MFC-9320CW)
- Memory Security (MFC-9120CN)
- Dial Restriction

Setting up the password

1. Press **Menu**, **1**, **7**, **2**.
2. Enter a four-digit number for the password using numbers 0–9.
   Press **OK**.
3. Re-enter your password when the LCD shows `Verify:`.
   Press **OK**.
4. Press **Stop/Exit**.

Changing your Setting Lock password

1. Press **Menu**, **1**, **7**, **2**.
2. Press ▲ or ▼ to choose `Set Password`.
   Press **OK**.
3. Enter your four-digit password.
   Press **OK**.
4. Enter a four-digit number for the new password.
   Press **OK**.
5. Re-enter your new password when the LCD shows `Verify:`.
   Press **OK**.
6. Press **Stop/Exit**.

Turning Setting Lock on/off

If you enter the wrong password when following the instructions below, the LCD will show `Wrong Password`. Re-enter the correct password.

Turning Setting Lock on

1. Press **Menu**, **1**, **7**, **2**.
2. Press ▲ or ▼ to choose `On`.
   Press **OK**.
3. Enter your four-digit password.
   Press **OK**.
4. Press **Stop/Exit**.

Turning Setting Lock off

1. Press **Menu**, **1**, **7**, **2**.
2. Enter your four-digit password.
   Press **OK** twice.
3. Press **Stop/Exit**.

Restricting dialling

This feature is to prevent users from sending a fax or call to a wrong number by mistake. You can set the machine to restrict dialling by using the dial pad, One Touch and Speed Dial.

If you choose `Off`, the machine does not restrict the dialling method.

If you choose `Enter # twice`, the machine will prompt you to re-enter the number, and then if you re-enter the same number correctly, the machine will start dialling. If you re-enter the wrong number, the LCD will show an error message.

If you choose `On`, the machine will restrict all fax sending and outbound calls for that dialling method.

Dial pad restriction

1. Press **Menu**, **2**, **6**, **1**.
2. Press ▲ or ▼ to choose `Off`, `Enter # twice` or `On`.
   Press **OK**.
3. Press **Stop/Exit**.

One Touch restriction

1. Press **Menu**, **2**, **6**, **2**.
2. Press ▲ or ▼ to choose `Off`, `Enter # twice` or `On`.
   Press **OK**.
3. Press **Stop/Exit**.

Speed Dial restriction

1. Press **Menu**, **2**, **6**, **3**.
2. Press ▲ or ▼ to choose `Off`, `Enter # twice` or `On`.
   Press **OK**.
3. Press **Stop/Exit**.

Note

- The `Enter # twice` setting will not work if you lift an external handset before entering the number. You will not be asked to re-enter the number.
- The machine cannot restrict dialling from **Redial/Pause**.
- If you chose `On` or `Enter # twice`, you cannot use the Broadcasting feature and cannot combine quick dial numbers when dialling.

Section II

Fax

Sending a fax	38
Receiving a fax	46
Telephone and external devices	52
Dialling and storing numbers	63
Remote Fax Options (black & white only)	72
Polling	79
Printing reports	82

5 Sending a fax

How to fax

Entering fax mode

To enter fax mode press (**Fax**), and the key will glow blue.

Sending a fax from the ADF

Using the ADF to send your faxes is the easiest way. To cancel a fax in progress press **Stop/Exit**.

1. Make sure you are in Fax mode .
2. Place your document face up, top edge first in the ADF until the LCD display changes and you feel it touch the feed rollers.
3. Dial the fax number. (See *How to dial* on page 63.)
4. Press **Mono Start** or **Colour Start**.
   - If you press **Mono Start**, the machine scans the pages into memory and then sends the document.
   - If you press **Colour Start**, the machine starts dialling and sends the document in real time.

Note

If an `Out of Memory` message appears while scanning a document into memory, press **Stop/Exit** to cancel or **Mono Start** to send the scanned pages.

Sending a fax from the scanner glass

You can use the scanner glass to fax the pages of a book, or a single page at a time. The documents can be up to Letter or A4 size. Press **Stop/Exit** to cancel a fax in progress.

1. Make sure you are in Fax mode .
2. Place your document *face down* on the scanner glass.
3. Dial the fax number. (See *How to dial* on page 63.)
4. Press **Mono Start** or **Colour Start**.
   - If you press **Mono Start**, the machine starts scanning the first page. Go to step ❺.
   - If you press **Colour Start**, the machine starts sending. Go to step ❼.
5. After the machine scans the page, the LCD will prompt you to choose one of the options below:

```
Next Page?
1.Yes 2.No(Send)
```

   - Press **1** to send another page. Go to step ❻.
   - Press **2** or **Mono Start** to send the document. Go to step ❼.
6. Place the next page on the scanner glass, press **OK**. Repeat steps ❺ and ❻ for each additional page.

```
Set Next Page
Then Press OK
```

7 Your machine will automatically send the fax.

Note

When faxing multiple pages from the scanner glass, real time transmission should be set to `Off`. (See *Real Time Transmission* on page 43.)

Faxing Letter size document from the scanner glass

When faxing Letter size documents, you will need to set the scan glass size to `Letter`; otherwise, a portion of your faxes will be missing.

1 Make sure you are in Fax mode.

2 Press **Menu**, **1**, **8**, **1**.

3 Press ▲ or ▼ to choose `Letter`.
Press **OK**.

4 Press **Stop/Exit**.

Cancelling a fax in progress

Press **Stop/Exit** to cancel the fax. If you press **Stop/Exit** while the machine is dialling or sending, the LCD will show `1.Clear 2.Exit`, press **1** to cancel the fax.

Broadcasting (black & white only)

Broadcasting lets you send the same fax message to more than one fax number. You can include Groups, One Touch, Speed Dial numbers and up to 50 manually dialled numbers in the same broadcast.

You can broadcast up to 258 different numbers. This will depend on how many groups, access codes or credit card numbers you have stored, and on how many delayed or stored faxes in memory.

Note

Use ▼ (**Address Book**) to help you choose numbers easily.

1 Make sure you are in Fax mode.

2 Load your document.

3 Enter a number.
Press **OK**.
You can use either a One Touch, Speed Dial, a Group number, or a number manually entered using the dial pad. (See *How to dial* on page 63.)

4 Repeat step ❸ until you have entered all the fax numbers you want to broadcast to.

5 Press **Mono Start**.

After the broadcast is finished the machine will print a broadcast report to let you know the results.

Note

The scan profile of the One Touch, Speed Dial or Group number you chose first will be applied to the broadcast.

Cancelling a Broadcast in progress

1. Press **Menu**, **2**, **7**.
   The LCD will show the Broadcast job number followed by the fax number (or name) being dialed (for example, `#001 0123456789`).

2. Press **OK**.
   The LCD will show the following message:

   ```
   #001 0123456789
   1.Clear 2.Exit
   ```

3. Press **1** to cancel the fax number being dialed.
   The LCD will then show the following message:

   ```
   Broadcast#001
   1.Clear 2.Exit
   ```

4. To cancel the Broadcast, press **1**.

5. Press **Stop/Exit**.

Additional sending operations

Sending faxes using multiple settings

Before you send a fax, you can change any combination of these settings: contrast, resolution, overseas mode, delayed fax timer, polling transmission, real time transmission or cover page settings.

1. Make sure you are in Fax mode .
   After each setting is accepted, the LCD asks if you want to enter more settings.

   ```
   Next
   1.Yes 2.No
   ```

2. Do one of the following:
   - To choose more settings, press **1**. The LCD returns to the `Setup Send` menu so you can choose another setting.
   - If you have finished choosing settings, press **2** and go to the next step for sending your fax.

Electronic cover page (black & white only)

This feature will *not* work unless you have already programmed your Station ID. (See the *Quick Setup Guide*.)

You can automatically send a cover page with every fax. Your cover page includes your Station ID, a comment, and the name (or number) stored in the One Touch or Speed Dial memory.

By choosing `Next Fax:On` you can also display the number of pages on the cover page.

You can choose one of the following preset comments.

`1.Note Off`

`2.Please Call`

`3.Urgent`

`4.Confidential`

Instead of using one of the preset comments, you can enter two personal messages of your own, up to 26 characters long. Use the chart on page 213 for help entering characters.

(See *Composing your own comments* on page 41.)

`5.`(User Defined)

`6.`(User Defined)

Composing your own comments

You can set up two comments of your own.

1. Make sure you are in Fax mode .
2. Press **Menu**, **2**, **2**, **8**.
3. Press ▲ or ▼ to choose `5` or `6` to store your own comment.
   Press **OK**.
4. Enter your own comment using the dial pad.
   Press **OK**.

Use the chart on page 213 for help entering characters.

Send a cover page for the next fax

If you want to send a cover page only for the next fax, your machine will ask you to enter the number of pages you are sending so it can be printed on the cover page.

1. Make sure you are in Fax mode .
2. Load your document.
3. Press **Menu**, **2**, **2**, **7**.
4. Press ▲ or ▼ to choose `Next Fax:On` (or `Next Fax:Off`).
   Press **OK**.
5. Press ▲ or ▼ to choose a comment.
   Press **OK**.
6. Enter two digits to show the number of pages you are sending.
   Press **OK**.
   For example, enter **0**, **2** for 2 pages or **0**, **0** to leave the number of pages blank.
   If you make a mistake, press ◀ or **Clear/Back** to back up and re-enter the number of pages.

Send a cover page for all faxes

You can set the machine to send a cover page whenever you send a fax.

1. Make sure you are in Fax mode .
2. Press **Menu**, **2**, **2**, **7**.
3. Press ▲ or ▼ to choose `On` (or `Off`).
   Press **OK**.
4. Press ▲ or ▼ to choose a comment.
   Press **OK**.

Using a printed cover page

If you want to use a printed cover page that you can write on, you can print the sample page and attach it to your fax.

1. Make sure you are in Fax mode .
2. Press **Menu**, **2**, **2**, **7**.
3. Press ▲ or ▼ to choose `Print Sample`.
   Press **OK**.
4. Press **Start**.
5. After the machine prints a copy of your cover page, press **Stop/Exit**.

Contrast

For most documents the default setting of `Auto` will give the best results. It automatically chooses the suitable contrast for your document.

If your document is very light or dark, changing the contrast may improve the quality of the fax.

Use `Dark` to make the faxed document lighter.

Use `Light` to make the faxed document darker.

1. Make sure you are in Fax mode .
2. Load your document.
3. Press **Menu**, **2**, **2**, **1**.
4. Press ▲ or ▼ to choose `Auto`, `Light` or `Dark`.
   Press **OK**.

Note

Even if you choose `Light` or `Dark`, the machine will send the fax using the `Auto` setting if you choose `Photo` as the Fax Resolution.

Changing Fax Resolution

The quality of a fax can be improved by changing the Fax Resolution. Resolution can be changed for the next fax or for all faxes.

To change the Fax Resolution setting for the *next* fax

1. Make sure you are in Fax mode .
2. Load your document.
3. Press **Resolution**, then ▲ or ▼ to choose the resolution.
   Press **OK**.

To change the default Fax Resolution setting

1. Make sure you are in Fax mode .
2. Press **Menu**, **2**, **2**, **2**.
3. Press ▲ or ▼ to choose the resolution you want.
   Press **OK**.

Note

You can choose four different resolution settings for black & white faxes and two for colour.

Black & white	
Standard	Suitable for most typed documents.
Fine	Good for small print and transmits a little slower than Standard resolution.
S.Fine	Good for small print or artwork and transmits slower than Fine resolution.
Photo	Use when the document has varying shades of grey or is a photograph. This has the slowest transmission time.

Colour	
Standard	Suitable for most typed documents.
Fine	Use when the document is a photograph. The transmission time is slower than Standard resolution.

If you choose S.Fine or Photo and then use the **Colour Start** key to send a fax, the machine will send the fax using the Fine setting.

The time taken to send will increase when selecting S.Fine or Photo.

Dual access (black & white only)

You can dial a number, and start scanning the fax into memory even when the machine is sending from memory, receiving faxes or printing PC data. The LCD will show the new job number.

The number of pages you can scan into the memory will vary depending on the data that is printed on them.

Note

If you get an Out of Memory message while scanning the first page of a fax, press **Stop/Exit** to cancel scanning. If you get an Out of Memory message while scanning a subsequent page, you can press **Mono Start** to send the pages scanned so far, or press **Stop/Exit** to cancel the operation.

Real Time Transmission

When you are sending a fax, the machine will scan the document into the memory before sending it. Then, as soon as the telephone line is free, the machine will start dialling and sending.

Sometimes, you may want to send an important document immediately, without waiting for memory transmission. You can set Real Time TX to On for all documents or Next Fax:On for the next fax only.

Note

If the memory is full and you are sending a black and white fax from the ADF, the machine will send the document in real time (even if Real Time TX is set to off). If the memory is full, faxes from the scanner glass cannot be sent until you clear some of the memory.

In Real Time Transmission, the automatic redial feature does not work when using the scanner glass.

Sending in real time for all faxes

1. Make sure you are in Fax mode .
2. Press **Menu**, **2**, **2**, **5**.
3. Press ▲ or ▼ to choose `On`.
   Press **OK**.

Sending in real time for the next fax only

1. Make sure you are in Fax mode .
2. Press **Menu**, **2**, **2**, **5**.
3. Press ▲ or ▼ to choose `Next Fax:On`.
   Press **OK**.

Not sending in real time for the next fax only

1. Make sure you are in Fax mode .
2. Press **Menu**, **2**, **2**, **5**.
3. Press ▲ or ▼ to choose `Next Fax:Off`.
   Press **OK**.

Overseas Mode

If you are having difficulty sending a fax overseas due to a bad connection, then turning on Overseas Mode may help.

This is a temporary setting, and will only be active for your next fax.

1. Make sure you are in Fax mode .
2. Load your document.
3. Press **Menu**, **2**, **2**, **9**.
4. Press ▲ or ▼ to choose `On` or `Off`.
   Press **OK**.

Delayed Fax (black & white only)

You can store up to 50 faxes in the memory to be sent within a twenty four hour period.

1. Make sure you are in Fax mode .
2. Load your document.
3. Press **Menu**, **2**, **2**, **3**.
4. Enter the time you want the fax to be sent (in 24-hour format).
   (For example, enter 19:45 for 7:45 PM)
   Press **OK**.

Note

The number of pages you can scan into the memory depends on the amount of data printed on each page.

Delayed batch transmission (black & white only)

Before sending the delayed faxes, your machine will help you economize by sorting all the faxes in the memory by destination and scheduled time.

All delayed faxes that are scheduled to be sent at the same time to the same fax number will be sent as one fax to save transmission time.

1. Make sure you are in Fax mode .
2. Press **Menu**, **2**, **2**, **4**.
3. Press ▲ or ▼ to choose `On` or `Off`.
   Press **OK**.
4. Press **Stop/Exit**.

Checking and cancelling waiting jobs

Check which jobs are still waiting in the memory to be sent. If there are no jobs, the LCD will show `No Jobs Waiting`. You can cancel a fax job that is stored and waiting in the memory.

1. Press **Menu**, **2**, **7**.
   The number of jobs still to be sent will be displayed.
2. Do one of the following:
   - Press ▲ or ▼ to scroll though the waiting jobs, press **OK** to choose a job, and then press **1** to cancel it.
   - Press **2** to exit without cancelling.
3. When you have finished, press **Stop/Exit**.

Sending a fax manually

Manual transmission

Manual transmission lets you hear the dialling, ringing and fax-receiving tones while sending a fax.

1. Make sure you are in Fax mode .
2. Load your document.
3. Press **Hook** and listen for a dial tone. Or pick up the handset of an external telephone and listen for a dial tone.
4. Dial the fax number you want to call.
5. When you hear the fax tone, press **Mono Start** or **Colour Start**.
   - If you are using the scanner glass, press **1** to send a fax.
6. Replace the handset of an external telephone.

Out of memory message

If you get an `Out of Memory` message while scanning the first page of a fax, press **Stop/Exit** to cancel the fax.

If you get an `Out of Memory` message while scanning a subsequent page, you will have the option to press **Mono Start** to send the pages scanned so far, or to press **Stop/Exit** to cancel the operation.

Note

- If you get an `Out of Memory` message while faxing and you do not want to delete your stored faxes to clear the memory, you can send the fax in real time. (See *Real Time Transmission* on page 43.)
- To make extra memory available, you can do the following:
  - Print the faxes that are in the memory. (See *Printing a fax from the memory* on page 51.)
  - Turn off Fax storage. (See *Turning off Remote Fax Options* on page 75.)
  - Add Optional Memory. (See *Memory board* on page 123.)

6 Receiving a fax

Receive modes

You must choose a receive mode depending on the external devices and telephone services you have on your line. The diagrams below will help you choose the correct mode. (For more detailed information about the receive modes, see *Using receive modes* on page 47.)

Choosing the receive mode

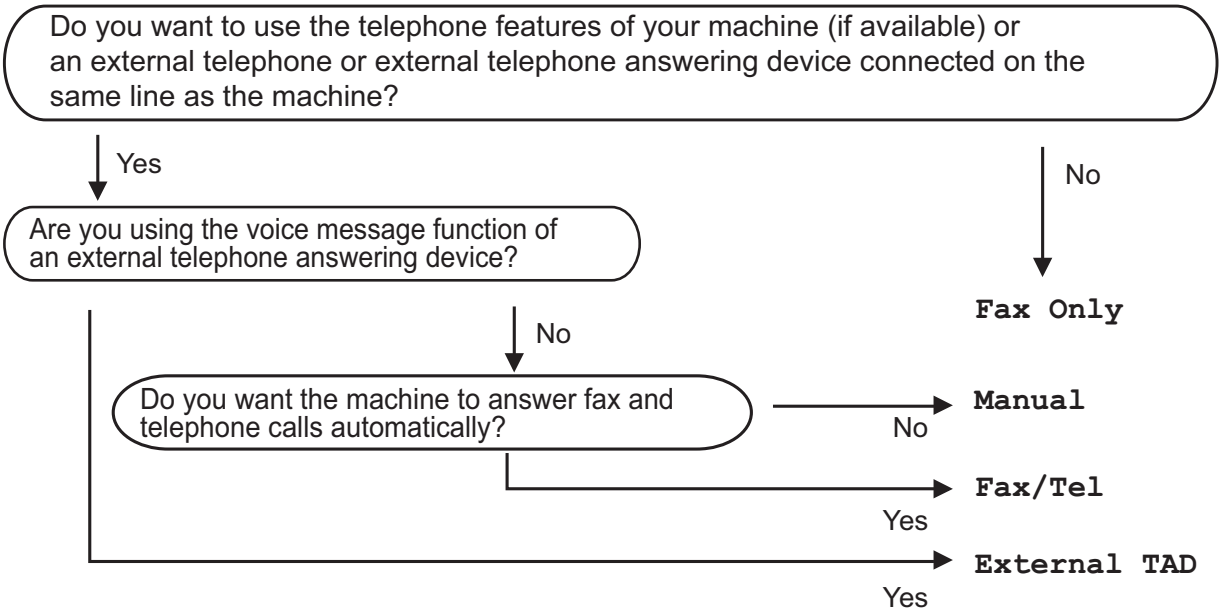

To set the receive mode follow the instructions below.

1. Press **Menu**, **0**, **1**.
2. Press ▲ or ▼ to choose the receive mode.
   Press **OK**.
3. Press **Stop/Exit**.

The LCD will display the current receive mode.

Using receive modes

Some receive modes answer faxes automatically (`Fax Only` and `Fax/Tel`). You may want to change the Ring Delay before using these modes. (See *Ring Delay* on page 48.)

Fax Only

`Fax Only` mode will automatically answer every call as a fax.

Fax/Tel

`Fax/Tel` mode helps you automatically manage incoming calls, by recognising whether they are fax or voice calls and dealing with them in one of the following ways:

- Faxes will be automatically received.
- Voice calls will start the F/T ring to tell you to pick up the line. The F/T ring is a fast double ring made by your machine.
- Use this mode if you receive few voice calls.

(Also see *F/T Ring Time (Fax/Tel mode only)* on page 48 and *Ring Delay* on page 48.)

Manual

`Manual` mode turns off all automatic answering functions unless you are using the Distinctive Ring [1] feature.

[1] Fax Ability in New Zealand.

To receive a fax in Manual mode lift the handset of the external telephone. When you hear fax tones (short repeating beeps), press **Mono Start**, and then press **2** to receive a fax. You can also use the Fax Detect feature to receive faxes by lifting a handset on the same line as the machine.

(Also see *Fax Detect* on page 49.)

If you use a computer modem on the same line, Faxing will not operate correctly.

External TAD

`External TAD` mode lets an external answering device manage your incoming calls. Incoming calls will be dealt with in the following ways:

- Faxes will be automatically received.
- Voice callers can record a message on the external TAD.

(For more information see *Connecting an external TAD* on page 58.)

Receive Mode settings

Ring Delay

The Ring Delay setting sets the number of times the machine rings before it answers in `Fax Only` and `Fax/Tel` modes.

If you have external or extension telephones on the same line as the machine, choose the maximum number of rings. (See *Operation from external or extension telephones* on page 60 and *Fax Detect* on page 49.)

1. Make sure you are in Fax mode .
2. Press **Menu**, **2**, **1**, **1**.
3. Press ▲ or ▼ to choose how many times the line rings before the machine answers (02-10 for Australia, 01-10 for New Zealand, 00-10 for some countries). Press **OK**.
4. Press **Stop/Exit**.

F/T Ring Time (Fax/Tel mode only)

When somebody calls your machine, you and your caller will hear the normal telephone ring sound. The number of rings is set by the Ring Delay setting.

If the call is a fax, then your machine will receive it; however, if it is a voice call the machine will sound the F/T ring (a fast double-ring) for the time you have set in the F/T Ring Time setting. If you hear the F/T ring it means that you have a voice caller on the line.

Because the F/T ring is made by the machine, extension and external telephones will *not* ring; however, you can still answer the call on any telephone. (For more information see *Using Remote Codes* on page 61.)

1. Make sure you are in Fax mode .
2. Press **Menu**, **2**, **1**, **2**.
3. Press ▲ or ▼ to choose how long the machine will ring to alert you that you have a voice call (20, 30, 40 or 70 seconds for Australia and some countries, 20, 30, 40 or 55 seconds for New Zealand).
   Press **OK**.
4. Press **Stop/Exit**.

Fax Detect

If Fax Detect is On:

The machine can receive a fax automatically, even if you answer the call. When you see Receiving on the LCD or hear a click on the phone line through the handset you are using, just replace the handset. Your machine will do the rest.

If Fax Detect is Off:

If you are at the machine and answer a fax call first by lifting the external handset, then press **Mono Start** or **Colour Start**, and then press **2** to receive.

If you answered at an extension telephone press ∗**51** (∗91 for New Zealand).
(See *Operation from external or extension telephones* on page 60.)

Note

- If this feature is set to On, but your machine does not connect a fax call when you lift an external or extension telephone handset, press the remote activation code ∗**51** (∗91 for New Zealand).
- If you send faxes from a computer on the same telephone line and the machine intercepts them, set Fax Detect to Off.
- We do not recommend having a PC plus fax machine on the same line.

1. Make sure you are in Fax mode .
2. Press **Menu**, **2**, **1**, **3**.
3. Press ▲ or ▼ to choose On or Off.
   Press **OK**.
4. Press **Stop/Exit**.

Setting the Print Density

You can adjust the Print Density setting to make your printed pages darker or lighter.

1. Make sure you are in Fax mode .
2. Press **Menu**, **2**, **1**, **7**.
3. Press ▲ to make the print darker.
   Or, press ▼ to make the print lighter.
   Press **OK**.
4. Press **Stop/Exit**.

Additional receiving operations

Printing a reduced incoming fax

If you choose On, the machine automatically reduces each page of an incoming fax to fit on one page of A4, Letter, Legal or Folio size paper.

The machine calculates the reduction ratio by using the page size of the fax and your Paper Size setting (**Menu**, **1**, **2**, **2**).

1. Make sure you are in Fax mode .
2. Press **Menu**, **2**, **1**, **5**.
3. Press ▲ or ▼ to choose On or Off. Press **OK**.
4. Press **Stop/Exit**.

Setting the Fax Receive Stamp (black & white only)

You can set the machine to print the received date and time in the top centre of each received fax page.

1. Make sure you are in Fax mode .
2. Press **Menu**, **2**, **1**, **9**.
3. Press ▲ or ▼ to choose On or Off. Press **OK**.
4. Press **Stop/Exit**.

Note

- The received time and date will not appear when using Internet Fax.
- Make sure you have set the current date and time in the machine. (See the Quick Setup Guide.)

Receiving faxes into memory (black & white only)

As soon as the paper tray becomes empty during fax reception, the screen will display No Paper, asking you to put paper in the paper tray. (See *Loading paper and print media* on page 11.) If you are unable to put paper in the paper tray the following will happen:

If Memory Receive is On:

The machine will carry on receiving the fax, with the remaining pages being stored in memory, if enough memory is available. Further incoming faxes will also be stored into memory until the memory is full. When the memory is full the machine will stop automatically answering calls. To print the faxes, put fresh paper in the tray and press **Mono Start** or **Colour Start**.

If Memory Receive is Off:

The machine will carry on receiving the current fax, with the remaining pages being stored in memory, if enough memory is available. Further incoming faxes will not be stored in memory. The machine will then stop automatically answering calls until fresh paper is put in the paper tray. To print the last fax you received, put fresh paper in the tray and press **Mono Start** or **Colour Start**.

1. Make sure you are in Fax mode .
2. Press **Menu**, **2**, **1**, **6**.
3. Use ▲ or ▼ to choose On or Off. Press **OK**.
4. Press **Stop/Exit**.

Printing a fax from the memory

If you are using the Fax Storage feature (**Menu**, **2**, **5**, **1**), you can still print a fax from the memory when you are at your machine. (See *Fax Storage* on page 73.)

1. Press **Menu**, **2**, **5**, **3**.
2. Press **Start**.
3. Press **Stop/Exit**.

Out of Paper Reception (black & white only)

As soon as the paper tray becomes empty during fax reception, the LCD shows `No Paper`. Put some paper in the paper tray. (See *Loading paper and print media* on page 11.)

The machine will carry on receiving the fax, with the remaining pages being stored in memory, if enough memory is available.

7 Telephone and external devices

Telephone line services

Features like Voice Mail, Call Waiting, Call Waiting/Caller ID, RingMaster, answering services, alarm systems or other custom features on one telephone line may create problems with the operation of your machine.

Do you have Voice Mail?

If you have Voice Mail on the telephone line that you will install your new **Machine** on, there is a strong possibility *that Voice Mail and the* **Machine** *will conflict with each other while receiving incoming calls.* **However, the Distinctive Ring feature allows you to use more than one number on your line, so both Voice Mail and the Machine can work together without any problems.** If each one has a separate telephone number, neither will interfere with the other's operations.

If you decide to get the Distinctive Ring service from the telephone company, you will need to follow the directions to 'register' the new Distinctive Ring pattern they give you. This is so your Machine can recognize its incoming calls.

Telephone Service for Australia

Telstra® FaxStream® Duet® (Distinctive Ringing)

Telstra® FaxStream® Duet® is an enhanced Public Switched Telephone Service (PSTS) offered by Telstra® that allows you to have an additional number on one telephone line, with its own distinctive ring pattern. Telstra® FaxStream® Duet® is a call handling feature that helps users distinguish voice and facsimile calls. With FaxStream® Duet®, incoming calls to a fax number are announced by a different, distinctive ring signal. Only one call can be answered (or made) at any one time and while this call is in progress, incoming calls to either number will be presented with a busy tone.

Your machine has a Distinctive Ringing function, allowing you to dedicate one telephone number just for receiving faxes.

Note

After you have set the Distinctive Ring feature to On, the receive mode is set to `Manual` automatically. Your Distinctive Ring Number does not allow Voice Calls - only Faxes. You cannot change the receive mode from `Manual` mode while the Distinctive Ring is set to On.

What is the Advantage of using Telstra® FaxStream® Duet® Function?

Using Telstra® FaxStream® Duet® is the most efficient way to receive both fax and telephone calls on the same line. When the voice call comes in, all telephones (extension and external) and the fax machine will ring to alert you to pick it up. If a fax call comes in, the fax machine will answer automatically without ringing, whereas the extension and external telephones will ring twice with a distinctive ring pattern. It is also a more efficient way of operating a Fax machine with an extension telephone as you do not have to use the remote activation codes. It gives you two independent numbers without the higher cost of a second line.

How does Telstra® FaxStream® Duet® Work?

Incoming calls to the voice number, will have the standard ring pattern of long, long tone, followed by a pause, repeated, while the new fax number will have a different ring pattern of three short bursts of ring, repeated at regular intervals.

When FaxStream® Duet® is On and you receive a voice call all extension and external telephones will ring with a standard ring pattern. The fax machine will ring on the third ring with a standard ring pattern. All external and the extension telephones will continue to ring, until you or a telephone answering device can answer the voice number.

When FaxStream® Duet® is On and you receive a fax call on the Duet® number the Fax machine will answer and automatically receive the fax message without ringing. On the other hand, all extension and external telephones will ring twice with a distinctive ring pattern. Do not answer the telephone as you are receiving a fax message.

Flowchart Sequence of Incoming call

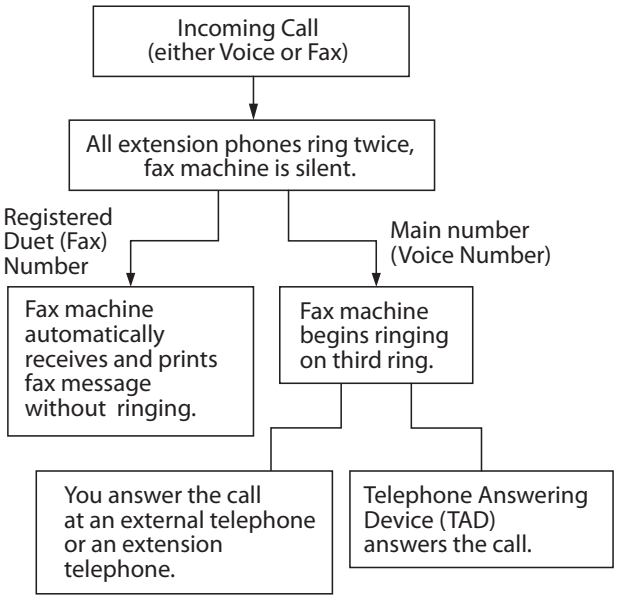

Set the Distinctive Ring to ON Very important!

After you have set the Distinctive Ring feature to ON, the receive mode is set to `Manual` automatically. Your Distinctive Ring Number does not allow Voice Calls - only Faxes. You cannot change the receive mode to another mode while the Distinctive Ring is set to On:

1. Press **Menu**, **2**, **0**, **2**.
2. Press ▲ or ▼ to choose `On`.
3. Press **OK**.
4. Press **Stop/Exit**. Distinctive Ring is now set to on.

Turning off Distinctive Ring

1. Press **Menu**, **2**, **0**, **2**.
2. Press ▲ or ▼ to choose `Off`.
3. Press **OK**.
4. Press **Stop/Exit**.

Note

If you turn off Distinctive Ring, the machine will stay in `Manual` receive mode. You will need to set the Receive Mode again. (See *Choosing the receive mode* on page 46.)

Telephone Service for New Zealand

FaxAbility

FaxAbility is a service offered by Telecom that allows you to have an additional number on one telephone line, with its own distinctive ring pattern. This way, when you get an incoming call, you can identify the number being called by its ring.

How Will the Fax Machine Treat All Other Numbers?

FaxAbility mode ensures that the machine will answer calls to the FaxAbility (secondary) number. When a call comes in to your main number, all the telephones will ring. You can set an external answering device (TAD) to answer calls on the other number(s). (See the chart in the following page.)

What is the Advantage of Using the FaxAbility Function?

Using FaxAbility is the most efficient way to receive both fax and telephone calls on the same line. It is much easier for your callers who dial manually. The fax machine will answer with receiving tones so they will not have to press an activation code. And the people who call to talk on your main number will not have to talk to your fax machine. Basically, it gives you two independent numbers without the higher cost of a second line.

How Does FaxAbility Work?

Your telephone number will have the standard ring pattern of long, long tone, while the new number will have a ring pattern of long, silence, long, etc. When FaxAbility is `On`, you will not hear the first ring of all incoming calls on the fax machine. Extension telephones will ring as usual. If the fax machine recognizes the ring pattern, all ringing will stop and the fax machine will answer and automatically receive the fax message. Otherwise, you will hear the extension telephones and the fax machine continue to ring. The fax machine always listens to the ring pattern before it answers, so do not pick up the telephone during that time. You will quickly learn to recognize the ring pattern for faxes, so you will not be tempted to answer that number. Either you or a telephone answering device can answer the main number(s).

Flowchart Sequence of Incoming call

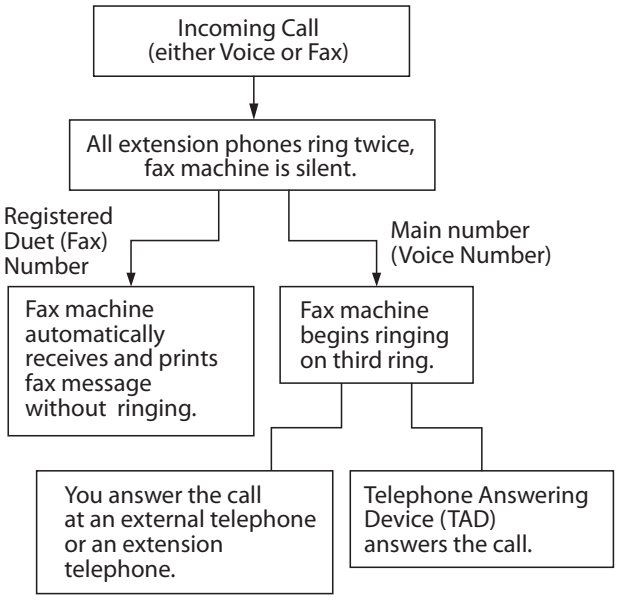

Note

After you have set the FaxAbility feature to `On`, the receive mode is set to `Manual` automatically. Unless you have a TAD or Voice Mail set up on the FaxAbility number, Manual mode means you must answer all the call yourself. You can not change the receive mode to the other mode while the FaxAbility is set to on.

How to Turn FaxAbility OFF or ON

The FaxAbility function is designed to accommodate the FaxAbility service provided by Telecom. To change the setting, repeat Steps 1-3; Step 2 is where you can choose either On or Off.

Call Waiting beeps caused by incoming calls on your main number can affect fax transmissions. If you have FaxAbility Service but don't have Call Waiting, you need do nothing at this stage. If you do have Call Waiting as well as FaxAbility, set the Call Waiting menu option to On. See below.

1. Press **Menu**, **2**, **0**, **2**.
2. Press ▲ or ▼ to set FaxAbility to On or Off.
   If you have FaxAbility service, choose On.
   Press **OK**.
3. Press ▲ or ▼ to set Call Waiting to On or Off. If you have Call Waiting service, choose On to avoid the trouble caused by Call Waiting.
   Press **OK**.
4. Press **Stop/Exit**.

Telephone Service for Some Countries

Distinctive Ringing (For Singapore and Hong Kong)

This machine feature lets you use the Distinctive Ringing subscriber service offered by some telephone companies, which allows you to have several telephone numbers on one telephone line. Each telephone number has its own Distinctive Ringing pattern, so you will know which telephone number is ringing. This is one way you can have a separate telephone number for your machine.

Your machine has a Distinctive Ringing function, allowing you to dedicate one telephone number just for receiving faxes. You will need to set Distinctive Ringing to On.

Note

- You can switch it off temporarily, then turn it back on. When you get a new fax number, make sure you reset this function.
- The machine will answer only calls to the Distinctive Ringing number.

Note

After you have set the Distinctive Ring feature to On, the receive mode is set to Manual automatically. Unless you have a TAD or Voice Mail set up on the Distinctive Ring number, Manual mode means you must answer all the call yourself. You can not change the receive mode to the other mode while the Distinctive Ring is set to On.

Registering the Distinctive Ring pattern
Very important!

After you have set the Distinctive Ring feature to ON, the receive mode is set to `Manual` automatically. Unless you have a TAD or Voice Mail set up on the Distinctive Ring number, `Manual` mode means you must answer all the calls yourself. You can not change the receive mode to another mode while the Distinctive Ring is set to on.

1. Press **Menu**, **2**, **0**, **2**.
2. Press ▲ or ▼ to choose `On`.
3. Press **OK**.
4. Press **Stop/Exit**. Distinctive Ring is now set to on.

Turning off Distinctive Ring

1. Press **Menu**, **2**, **0**, **2**.
2. Press ▲ or ▼ to choose `Off`.
3. Press **OK**.
4. Press **Stop/Exit**.

Note

If you turn off Distinctive Ring, the machine will stay in `Manual` receive mode. You will need to set the receive Mode again. (See *Choosing the receive mode* on page 46.)

Caller ID (not available in India)

The Caller ID feature lets you use the Caller ID subscriber service offered by many local telephone companies. Call your telephone company for details. This service shows the telephone number, or name if it is available, of your caller as the line rings.

After a few rings, the LCD will show the telephone number of your caller (and name, if available). Once you answer a call, the Caller ID information disappears from the LCD, but the call information stays stored in the Caller ID memory.

- You will see the number (or name) on the LCD.
- The `ID Unknown` message means the call originated outside your Caller ID service area.
- The `ID Withheld` message means the caller has intentionally blocked transmission of information.

You can print a list of the Caller ID information received by your machine. (See *Printing the Caller ID List* on page 58.)

Note

The Caller ID service varies with different carriers. Call your local telephone company to find out about the kind of service available in your area. This feature may not available in some countries.

Viewing the Caller ID List

Your machine stores information for the last thirty calls in the Caller ID list. You can view or print this list. When the thirty-first call comes in to the machine, it replaces information about the first call.

1. Press **Menu**, **2**, **0**, **3**.
2. Press ▲ or ▼ to choose `Display#`. Press **OK**.
   The Caller ID of the last call will appear on the display. If no ID is stored, the beeper will sound and `No Caller ID` will appear on the display.
3. Press ▲ or ▼ to scroll through the Caller ID memory to choose the Caller ID you want to view, and then press **OK**.
   The LCD will show the caller's number and the date and time of the call.
4. To finish viewing, press **Stop/Exit**.

Printing the Caller ID List

1. Press **Menu**, **2**, **0**, **3**.
2. Press ▲ or ▼ to choose `Print Report`. Press **OK**.
   If no ID is stored, the beeper will sound and `No Caller ID` will appear on the LCD.
3. Press **Mono Start** or **Colour Start**.
4. After printing has finished, press **Stop/Exit**.

Connecting an external TAD

You can connect an external Telephone Answering Device (TAD) to the same line as your machine. When the TAD answers a call, your machine will “listen” for the CNG (fax calling) tones sent by a sending fax machine. If it hears them it will take over the call and receive the fax. If it does not hear them, it will let your TAD take a voice message and the display will show `Telephone`.

The external TAD must answer within four rings (we recommend you set it to two rings). This is because your machine cannot hear the CNG tones until the external TAD has picked up the call. The sending machine will send CNG tones for only eight to ten seconds longer. We do not recommend using the toll saver feature on your external TAD if it needs more than four rings to activate it.

Note

If you have problems receiving faxes, reduce the ring delay setting on your external TAD to one or two rings.

Connections

The external TAD must be connected as shown in the illustration below.

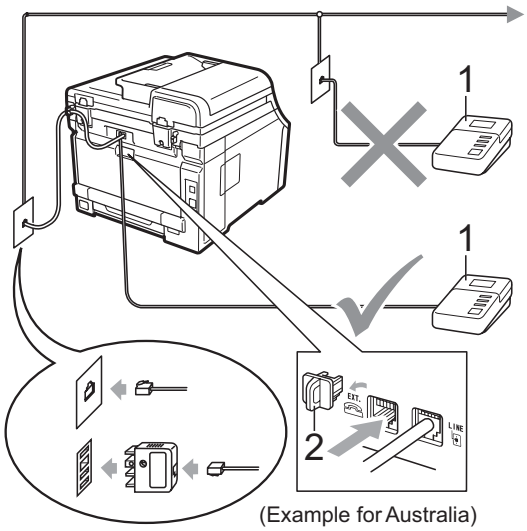

(Example for Australia)

1 TAD

2 Protective Cap

1. Set your external TAD to one or two rings. (The machine's Ring Delay setting does not apply.)
2. Record the outgoing message on your external TAD.
3. Set the TAD to answer calls.
4. Set the Receive Mode to `External TAD`. (See *Choosing the receive mode* on page 46.)

Recording an outgoing message (OGM)

1. Record 5 seconds of silence at the beginning of your message. This allows your machine time to listen for fax tones.
2. Limit your speaking to 20 seconds.
3. End your 20-second message by giving your Remote Activation code for people sending manual faxes. For example: "After the beep, leave a message or press ∗**51** (∗91 for New Zealand) and **Start** to send a fax."

Note

- You need to turn the Remote Codes setting to on to use the Fax Activation Code ∗51 (∗91 for New Zealand). (See *Using Remote Codes* on page 61.)
- We recommend beginning your OGM with an initial 5 second silence because the machine cannot hear fax tones over a loud voice. You may try leaving out this pause, but if your machine has trouble receiving faxes, then you should re-record the OGM to include it.

Multi-line connections (PABX)

Most offices use a central telephone system. Brother recommends that all our Fax/MFC machines be connected to a discreet (dedicated) line. Although a particular PABX may appear to work with a particular model of fax machine, we cannot guarantee that the unit will operate correctly.

While it is often relatively simple to connect a fax machine to a PABX (Private Automatic Branch Exchange), we suggest that you contact the company that installed your telephone system and ask them to connect the fax machine for you.

Brother does not recommend the use of a PABX line. PABX limitations in general can cause some functions of the fax machine not to work correctly.

External and extension telephones

Note

You need to turn the Remote Codes setting to on to use the Remote Activation Code ∗51 (∗91 for New Zealand) and Remote Deactivation Code #51 (#91 for New Zealand). (See *Using Remote Codes* on page 61.)

Operation from external or extension telephones

If you answer a fax call on an extension telephone, or an external telephone that is correctly connected to the machine through the T-piece connection, you can make your machine take the call by using the Remote Activation code. When you press the Remote Activation code ∗**51** (∗91 for New Zealand) the machine starts to receive the fax.

If you answer a call and no one is on the line:

You should assume that you're receiving a manual fax.

Press ∗**51** (∗91 for New Zealand) and wait for the chirp or until the LCD shows `Receiving`, and then hang up.

Note

You can also use the Fax Detect feature to make your machine take the call. (See *Fax Detect* on page 49.)

For Fax/Tel mode only

When the machine is in Fax/Tel mode, it will use the F/T Ring Time (pseudo/double-ringing) to alert you to pick up a voice call.

Lift the external telephone's handset, and then press **Hook** to answer.

If you are at an extension telephone, you will need to lift the handset during the F/T Ring Time and then press **#51** (#91 for New Zealand) between the pseudo/double rings. If no one is on the line, or if someone wants to send you a fax, send the call back to the machine by pressing ∗**51** (∗91 for New Zealand).

Connecting an external or extension telephone

You can connect a separate telephone directly to your machine as shown in the diagram below.

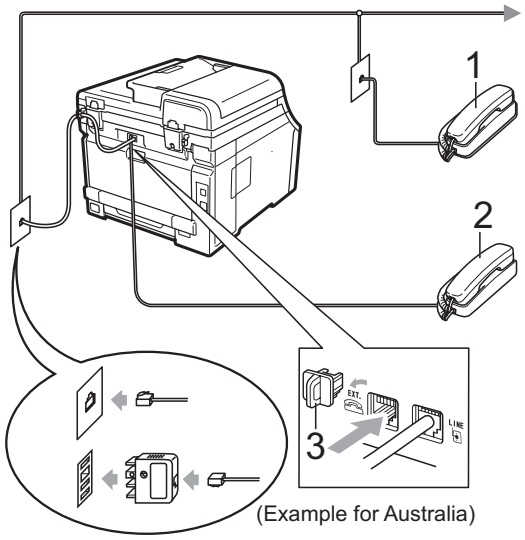

1 Extension telephone

2 External telephone

3 Protective Cap

When you are using an external telephone, the LCD shows `Telephone`.

Using a non-Brother cordless external handset

If your non-Brother cordless telephone is connected to the telephone line cord (see page 60) and you typically carry the cordless handset elsewhere, it is easier to answer calls during the Ring Delay.

If you let the machine answer first, you will have to go to the machine so you can press **Hook** to transfer the call to the cordless handset.

Note

- If you are always disconnected when accessing your external TAD remotely, try changing the Remote Activation Code and Remote Deactivation Code to another three-digit code using the numbers 0-9, ∗, **#**.
- Remote Codes might not work with some telephone systems.
- Not all brands of cordless telephones are compatible for use with your machine.

Using Remote Codes

Remote Activation Code

If you answer a fax call on an external or extension telephone, you can tell your machine to receive it by pressing the Remote Activation Code ∗**51** (∗91 for New Zealand). Wait for the chirping sounds then replace the handset. (See *Fax Detect* on page 49.) Your caller will have to press start to send the fax.

If you answer a fax call at the external telephone, you can make the machine receive the fax by pressing **Start**.

Remote Deactivation Code

If you receive a voice call and the machine is in F/T mode, it will start to sound the F/T (double-ring) after the initial ring delay. If you pick up the call on an extension telephone you can turn the F/T ring off by pressing **#51** (**#**91 for New Zealand) (make sure you press this *between* the rings).

If the machine answers a voice call and pseudo/double-rings for you to take over, you can take the call at the external telephone by pressing **Hook**.

Turning on the Remote Codes

You need to turn the Remote Codes setting to on to use the Remote Activation Code and Remote Deactivation Code.

1. Make sure you are in Fax mode .
2. Press **Menu**, **2**, **1**, **4**.
3. Press ▲ or ▼ to choose On.
   Press **OK**.
4. If you do not want to change the Remote Activation Code, press **OK**.
5. If you do not want to change the Remote Deactivation Code, press **OK**.
6. Press **Stop/Exit**.

Changing the Remote Codes

The preset Remote Activation Code is ∗**51** (∗91 for New Zealand). The preset Remote Deactivation Code is **#51** (**#**91 for New Zealand). If you are always disconnected when accessing your External TAD, try changing the three-digit remote codes, for example **###** and 555.

1. Make sure you are in Fax mode .
2. Press **Menu**, **2**, **1**, **4**.
3. Press ▲ or ▼ to choose `On` or `Off`.
   Press **OK**.
4. If you chose `On` in step ❸, enter the new Remote Activation Code.
   Press **OK**.
5. Enter the new Remote Deactivation Code.
   Press **OK**.
6. Press **Stop/Exit**.

8 Dialling and storing numbers

How to dial

You can dial in any of the following ways.

Manual dialling

Use the dial pad to enter all the digits of the telephone or fax number.

One touch Dialling

Press the One Touch key that stores the number you want to call. (See *Storing One Touch Dial numbers* on page 65.)

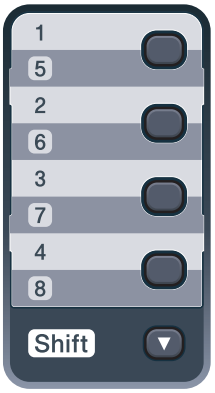

To dial One Touch numbers 5 to 8, hold down **Shift** as you press the One Touch key.

Speed dialling

Press ▼ (**Address Book**) and then the three digit Speed Dial number. (See *Storing Speed Dial numbers* on page 66.)

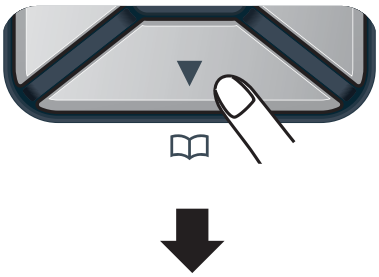

Three-digit number

Note

If the LCD shows `Register Now?` when you enter a One Touch or a Speed Dial number, it means that a number is not stored there.

Search

You can search alphabetically for names you have stored in the One Touch and Speed Dial memories. (See *Storing One Touch Dial numbers* on page 65 and *Storing Speed Dial numbers* on page 66.)

1. Press ▼ (**Address Book**) twice.
2. Press the dial pad key for the first few letters of the name. (Use the chart on *Entering text* on page 213 to help you enter letters.)
   Press **OK**.
3. Press ▲ or ▼ to scroll until you find the name you are looking for.
   Press **OK**.

4 Press **Mono Start** or **Colour Start**.

Note

- If you do not enter a letter and press **OK** in step ❷, all registered names will appear. Press ▲ or ▼ to scroll until you find the name you are looking for.
- If the LCD shows `No Contact Found` when you enter the first few letters of the name, it means that a name for the letter is not stored.

Fax redial

If you are sending a fax automatically and the line is busy, the machine will automatically redial up to three times at five minute intervals.

If you are sending a fax manually and the line is busy, press **Redial/Pause**, wait for the other fax machine to answer, and then press **Mono Start** or **Colour Start** to try again. If you want to make a second call to the last number dialled, you can save time by pressing **Redial/Pause** and **Mono Start** or **Colour Start**.

Redial/Pause only works if you dialled from the control panel.

Storing numbers

You can set up your machine to do the following types of easy dialling: One Touch, Speed Dial and Groups for Broadcasting faxes. You can also specify the default resolution for each One Touch and Speed Dial number. When you dial a quick dial number, the LCD shows the name, if you stored it, or the number. A scan profile can also be stored along with the fax number.

If you lose electrical power, the quick dial numbers stored in the memory will not be lost because they are stored permanently.

A scan profile is the resolution and other scan settings that you choose when you store a number. For example, you will be asked to select Standard (Std), Fine, or Photo if you have selected the I-FAX option. Or, you will be asked to select B&W 200 dpi, B&W 200 × 100 dpi, Gray 100 dpi, Gray 200 dpi, Gray 300 dpi, Color 100 dpi, Color 200 dpi, Color 300 dpi or Color 600 dpi if you selected the E-Mail option. (I-FAX, Fax/Tel and E-mail options are available as a download.)

Storing a pause

Press **Redial/Pause** to insert a 3.5-second pause between numbers. You can press **Redial/Pause** as many times as needed to increase the length of the pause.

Storing One Touch Dial numbers

Your machine has 4 One Touch keys where you can store 8 fax or telephone numbers for automatic dialling. To access numbers 5 to 8, hold down **Shift** as you press the One Touch key.

1. Press the One Touch key where you want to store the number.
   If a number is not stored there, the LCD shows `Register Now?`.
   Press **1** to choose `Yes`.

2. Enter the phone or fax number (up to 20 characters).
   Press **OK**.

3. Choose one of the following:
   - Enter the name using the dial pad (up to 15 characters). Use the chart on *Entering text* on page 213 to help you enter letters.

     Press **OK**.
   - Press **OK** to store the number without a name.

4. If you want to save a fax resolution along with the number, choose one of the following:
   - To store the fax resolution, press ▲ or ▼ to select `Std`, `Fine`, `S.Fine` or `Photo`.

     Press **OK**.
   - Press **OK** if you don't want to change the default resolution.

If you downloaded I-FAX, Fax/Tel and E-mail options

1. Press the One Touch key where you want to store the number.
   If a number is not stored there, the LCD shows `Register Now?`.
   Press **1** to choose `Yes`.

2. Press ▲ or ▼ to select `Fax/Tel`, `E-Mail` or `IFAX`.
   Press **OK**.

3. Choose one of the following:
   - Enter the telephone or fax number (up to 20 characters) if you selected `Fax/Tel`.

     Press **OK**.
   - Enter the E-mail address (up to 60 characters) if you selected `E-Mail` or `IFAX`. Use the chart on *Entering text* on page 213 to help you enter letters.

     Press **OK**.

Note

If you selected `E-Mail` and save the E-mail address, you can only use the E-mail address when you are in Scan mode. If you selected `IFAX` and save the E-mail address, you can only use the E-mail address when you are in Fax mode.

4 Choose one of the following:

- Enter the name using the dial pad (up to 15 characters).

  Press **OK**.

- Press **OK** to store the number or E-mail address without a name.

5 If you want to save a fax/scan resolution along with the number, choose one of the following:

- If you selected `Fax/Tel` in step ❷, press ▲ or ▼ to select `Std`, `Fine`, `S.Fine` or `Photo`.

  Press **OK**.

- If you selected `E-Mail` in step ❷, press ▲ or ▼ to select `Color100dpi`, `Color200dpi`, `Color300dpi`, `Color600dpi`, `Gray100dpi`, `Gray200dpi`, `Gray300dpi`, `B&W200dpi` or `B&W200x100`.

  Press **OK** and then go to step ❻.

- If you selected `IFAX` in step ❷, press ▲ or ▼ to select `Std`, `Fine` or `Photo`.

  Press **OK**.

- Press **OK** if you don't want to change the default resolution.

6 If you selected Black & White in step ❺, select the file format (TIFF, PDF or Secure PDF (SPDF)) that will be used to send to your PC. If you selected Gray or Color in step ❺, select the file format (PDF, Secure PDF (SPDF), JPEG, or XPS) that will be used to send to your PC. Press **OK**.

Note

- When you do a broadcast and you have saved a scan profile along with the number, the scan profile of the One Touch, Speed Dial or Group number you chose first will be applied to the broadcast.
- You can also store the number by pressing **Menu**, **2**, **3**, **1**.

Storing Speed Dial numbers

You can store your frequently used numbers as Speed Dial numbers, so that when you dial you will only have to press a few keys (▼ (**Address Book**), the three-digit number and **Mono Start** or **Colour Start**). The machine can store 200 Speed Dial numbers (001 - 200).

1 Press ▼ (**Address Book**) and enter a three-digit Speed Dial location number (001-200).
If a number is not stored there, the LCD shows `Register Now?`.
Press **1** to choose `Yes`.

2 Enter the phone or fax number (up to 20 characters).
Press **OK**.

3 Choose one of the following:

- Enter the name using the dial pad (up to 15 characters). Use the chart on *Entering text* on page 213 to help you enter letters.

  Press **OK**.

- Press **OK** to store the number without a name.

4 If you want to save a fax resolution along with the number, choose one of the following:

- To store the fax resolution, press ▲ or ▼ to select `Std`, `Fine`, `S.Fine` or `Photo`.

  Press **OK**.

- Press **OK** if you don't want to change the default resolution.

If you downloaded I-FAX, Fax/Tel and E-mail options

1. Press ▼ (**Address Book**) and enter a three-digit Speed Dial location number (001-200).
   If a number is not stored there, the LCD shows `Register Now?`.
   Press **1** to choose `Yes`.

2. Press ▲ or ▼ to select `Fax/Tel`, `E-Mail` or `IFAX`.
   Press **OK**.

3. Choose one of the following:
   - Enter the telephone or fax number (up to 20 characters) if you selected `Fax/Tel`.

     Press **OK**.
   - Enter the E-mail address (up to 60 characters) if you selected `E-Mail` or `IFAX`. Use the chart on *Entering text* on page 213 to help you enter letters.

     Press **OK**.

Note

If you selected `E-Mail` and save the E-mail address, you can only use the E-mail address when you are in Scan mode. If you selected `IFAX` and save the E-mail address, you can only use the E-mail address when you are in Fax mode.

4. Choose one of the following:
   - Enter the name using the dial pad (up to 15 characters).

     Press **OK**.
   - Press **OK** to store the number or E-mail address without a name.

5. If you want to save a fax/scan resolution along with the number, choose one of the following:
   - If you selected `Fax/Tel` in step ❷, press ▲ or ▼ to select `Std`, `Fine`, `S.Fine` or `Photo`.

     Press **OK**.
   - If you selected `E-Mail` in step ❷, press ▲ or ▼ to select `Color100dpi`, `Color200dpi`, `Color300dpi`, `Color600dpi`, `Gray100dpi`, `Gray200dpi`, `Gray300dpi`, `B&W200dpi` or `B&W200x100`.

     Press **OK** and then go to step ❻.
   - If you selected `IFAX` in step ❷, press ▲ or ▼ to select `Std`, `Fine` or `Photo`.

     Press **OK**.
   - Press **OK** if you don't want to change the default resolution.

6. If you selected Black & White in step ❺, select the file format (TIFF, PDF or Secure PDF (SPDF)) that will be used to send to your PC. If you selected Gray or Color in step ❺, select the file format (PDF, Secure PDF (SPDF), JPEG, or XPS) that will be used to send to your PC.
   Press **OK**.

Note

- When you do a broadcast and you have saved a scan profile along with the number, the scan profile of the One Touch, Speed Dial or Group number you chose first will be applied to the broadcast.
- You can also store the number by pressing **Menu**, **2**, **3**, **2**.

Changing One Touch and Speed Dial numbers

If you try to store a One Touch or Speed Dial number over an existing number, the LCD will show the name or number already stored there. If your machine has a scheduled job or you have set a fax forwarding number, the LCD will ask you if you want to change the number.

1. Do one of the following:
   - To change a stored One Touch number, press **Menu**, **2**, **3**, **1**.

     Press **OK**.

     ```
     One Touch Dial
     Select One Touch
     ```

     Choose the One Touch number you want to change.
   - To change a stored Speed Dial number, press **Menu**, **2**, **3**, **2**.

     Press **OK**.

     ```
     Speed Dial
     Speed Dial? #
     ```

     Choose the Speed Dial number you want to change, then press **OK**.
2. Do one of the following:
   - To change the stored number, press **1**.
   - To exit without making a change, press **2**.

     ```
     #005:MIKE
     1.Change  2.Exit
     ```
3. Enter a new number or character. Press **OK**.
4. Press ◀ or ▶ to position the cursor under the character you want to change, and then press **Clear/Back** to delete it. Repeat for each character you want to delete.
5. If you want to save a fax resolution along with the number, choose one of the options below:
   - To store the fax resolution, press ▲ or ▼ to select `Std`, `Fine`, `S.Fine` or `Photo`.

     Press **OK**.
   - Press **OK** if you don't want to change the default resolution.
6. Press **Stop/Exit**.

If you downloaded I-FAX, Fax/Tel and E-mail options

1. Do one of the following:
   - To change a stored One Touch number, press **Menu**, **2**, **3**, **1**.

     Press **OK**.

     ```
     One Touch Dial
     Select One Touch
     ```

     Choose the One Touch number you want to change.
   - To change a stored Speed Dial number, press **Menu**, **2**, **3**, **2**.

     Press **OK**.

     ```
     Speed Dial
     Speed Dial? #
     ```

     Choose the Speed Dial number you want to change then press **OK**.
2. Do one of the following:
   - To change the stored number, press **1**.
   - To exit without making a change, press **2**.

     ```
     #005:MIKE
     1.Change  2.Exit
     ```
3. Press ▲ or ▼ to select `Fax/Tel`, `E-Mail` or `IFAX`.
   Press **OK**.

4 Enter a new number or character.
Press **OK**.

5 Press ◀ or ▶ to position the cursor under the character you want to change, and then press **Clear/Back** to delete it.
Repeat for each character you want to delete.

6 Follow the directions beginning in step ❺ in Storing One-Touch dial numbers and Storing Speed-Dial numbers. (See *Storing One Touch Dial numbers* on page 65 and *Storing Speed Dial numbers* on page 66.)

Setting up Groups for Broadcasting

If you often want to send the same fax message to many fax numbers you can set up a group.

Groups are stored on a One Touch key or a Speed Dial number. Each group uses up a One Touch key or a Speed Dial location. You can then send the fax message to all the numbers stored in a group just by pressing a One Touch key or entering a Speed Dial number, and then pressing **Mono Start**.

Before you can add numbers to a group, you need to store them as One Touch or Speed Dial numbers. You can have up to 20 small groups, or you can assign up to 207 numbers to one large group.

1 Press **Menu**, **2**, **3**, **3**.

2 Choose the One Touch key or Speed Dial location where you want to store the group.

- Press a One Touch key.
- Press ▼ (**Address Book**) and then enter the three-digit Speed Dial location.

  Press **OK**.

Note

Please select a One Touch key or a Speed Dial number that has not been used to store a number.

3 Use the dial pad to enter a group number (01 to 20).
Press **OK**.

8

4 To add One Touch or Speed Dial numbers follow the instructions below:

- For One Touch numbers, press the One Touch keys one after the other.
- For Speed Dial numbers, press ▼ (**Address Book**) and then enter the three-digit Speed Dial location.

The LCD will display your chosen One Touch numbers with a ∗ and Speed Dial numbers with a # (for example ∗006, #009).

5 Press **OK** when you have finished adding numbers.

6 Do one of the following:

- Enter the name using the dial pad (up to 15 characters). Use the chart on *Entering text* on page 213 to help you enter letters.

  Press **OK**.
- Press **OK** to store the group without a name.

7 If you want to save a fax resolution along with the number, choose one of the options below:

- To store the fax resolution, press ▲ or ▼ to select `Std`, `Fine`, `S.Fine` or `Photo`.

  Press **OK**.
- Press **OK** if you do not want to change the default resolution.

8 Do one of the following:

- To store another group for broadcasting, go to step ❷.
- To finish storing groups for broadcasting, press **Stop/Exit**.

If you downloaded I-FAX, Fax/Tel and E-mail options

1 Press **Menu**, **2**, **3**, **3**.

2 Choose an empty location where you want to store the group in one of the following ways:

- Press a One Touch key.
- Press ▼ (**Address Book**) and then enter the three-digit Speed Dial location.

  Press **OK**.

3 Use the dial pad to enter a group number (01 to 20).
Press **OK**.

4 Press ▲ or ▼ to select `Fax/IFAX` or `E-Mail`.
Press **OK**.

5 To add One Touch or Speed Dial numbers follow the instructions below:

- For One Touch numbers, press the One Touch keys one after the other.
- For Speed Dial numbers, press ▼ (**Address Book**) and then enter the three-digit Speed Dial location.

The LCD will display your chosen One Touch numbers with a ∗ and Speed Dial numbers with a # (for example ∗006, #009).

6 Press **OK** when you have finished adding numbers.

7 Do one of the following:

- Enter the name using the dial pad (up to 15 characters). Use the chart on *Entering text* on page 213 to help you enter letters.

  Press **OK**.
- Press **OK** to store the group without a name.

8 You can save a fax/scan resolution along with the number. Do one of the following:

- If you selected `Fax/IFAX` in step ❹, press ▲ or ▼ to select `Std`, `Fine`, `S.Fine` or `Photo`.

  Press **OK**.

- If you selected `E-Mail` in step ❹, press ▲ or ▼ to select `Color100dpi`, `Color200dpi`, `Color300dpi`, `Color600dpi`, `Gray100dpi`, `Gray200dpi`, `Gray300dpi`, `B&W200dpi` or `B&W200x100`.

  Press **OK**.

- Press **OK** if you don't want to change the default resolution.

Note

If you have selected Fax/IFAX in step ❹ and added One-Touch or Speed-Dial numbers that are stored as 'I-Fax', you cannot select `S.Fine`.

9 If you selected Black & White in step ❽, select the file format (TIFF, PDF or Secure PDF (SPDF)) that will be used to send to your PC. If you selected Gray or Color in step ❽, select the file format (PDF, Secure PDF (SPDF), JPEG or XPS) that will be used to send to your PC.
Press **OK**.

Note

- Fax Broadcasting is for black & white only.
- You can easily print a list of all your Speed-Dial numbers. Numbers that are part of a group will be marked in the Group column. (See *Reports* on page 83.)

Combining quick dial numbers

You can combine more than one Quick Dial number when you dial. This feature may be useful if you need to dial an access code for a cheaper rate from another long distance carrier.

For example, you might have stored ‘555’ on Speed Dial #003 and ‘7000’ on Speed Dial #002. You can use them both to dial ‘555-7000’ if you press the following keys:

Press ▼ (**Address Book**), **003**.

Press ▼ (**Address Book**), **002** and **Mono Start** or **Colour Start**.

Numbers can be added manually by entering them on the dial pad:

Press ▼ (**Address Book**), **003**, **7001** (on the dial pad), and **Mono Start** or **Colour Start**.

This would dial ‘555–7001’. You can also add a pause by pressing **Redial/Pause** key.

Tone or Pulse (not available in New Zealand)

If you have a Pulse dialling service, but need to send Tone signals (for example, for telephone banking), follow the instructions below. If you have Touch Tone service, you will not need this feature to send tone signals.

1 Press **Hook**.

2 Press **#** on the machine’s control panel. Any digits dialled after this will send tone signals.
When you hang up, the machine will return to the Pulse dialling service.

9 Remote Fax Options (black & white only)

Remote Fax Options ARE NOT available for colour fax.

Remote Fax Options let you receive faxes while you are away from the machine.

You can use *only one* Remote Fax Option at a time.

Fax Forwarding

The Fax Forwarding feature lets you automatically forward your received faxes to another machine. If you choose Backup Print On, the machine will also print the fax.

1. Press **Menu**, **2**, **5**, **1**.
2. Press ▲ or ▼ to choose `Fax Forward`.
   Press **OK**.
   The LCD will ask you to enter the fax number you want your faxes to be forwarded to.
3. Enter the forwarding number (up to 20 digits).
   Press **OK**.

Note

You can also enter an E-mail address if your machine has been configured for the Internet Fax feature. (For details about Internet Fax, see the *Network User's Guide* on the CD-ROM. For information about Fax Forward to E-mail, see the Brother Solutions Center at http://solutions.brother.com/.)

4. Press ▲ or ▼ to choose `On` or `Off`.
   Press **OK**.

```
Backup Print
On
```

5. Press **Stop/Exit**.

IMPORTANT

If you choose Backup Print On, the machine will also print the fax at your machine so you will have a copy. This is a safety feature in case there is a power failure before the fax is forwarded or a problem at the receiving machine. The machine can store faxes for up to 60 hours if there is a power failure.

Fax Storage

The Fax Storage feature lets you store your received faxes in the machine's memory. You can retrieve stored fax messages from a fax machine at another location using the remote retrieval commands. (See *Retrieving fax messages* on page 76.) Your machine will automatically print a copy of the stored fax.

1. Press **Menu**, **2**, **5**, **1**.
2. Press ▲ or ▼ to choose `Fax Storage`. Press **OK**.
3. Press **Stop/Exit**.

Note

If `Fax Storage` is turned on your machine cannot receive a colour fax unless the sending machine converts it to black & white.

PC Fax Receive

If you turn on the PC Fax Receive feature your MFC will store received faxes in memory and send them to your PC automatically. You can then use your PC to view and store these faxes.

Even if you have turned off your PC (at night or the weekend, for example), your MFC will receive and store your faxes in its memory. The LCD will show the number of stored faxes received, for example:
`PC Fax Msg:001`

When you start your PC and the PC Fax Receiving software runs, your MFC transfers your faxes to your PC automatically.

To transfer the received faxes to your PC you must have the PC-FAX Receiving software running on your PC. (For details, see *PC-FAX receiving* in the *Software User's Guide* on the CD-ROM.)

1. Press **Menu**, **2**, **5**, **1**.
2. Press ▲ or ▼ to choose `PC Fax Receive`. Press **OK**.
3. Press ▲ or ▼ to choose `<USB>` or your computer name if the machine is connected to a network. Press **OK**.
4. Press ▲ or ▼ to choose `On` or `Off`.

   ```
   Backup Print
   Off
   ```

   Press **OK**.

5 Press **Stop/Exit**.

IMPORTANT

If you choose Backup Print On, the machine will also print the fax at your machine so you will have a copy. This is a safety feature in case there is a power failure before the fax is forwarded or a problem at the receiving machine. The machine can store faxes for up to 60 hours if there is a power failure.

Note

- Before you can set up PC Fax Receive you must install the MFL-Pro Suite software on your PC. Make sure your PC is connected and turned on. (For details see *PC-FAX receiving* in the *Software User's Guide* on the CD-ROM.)
- If your machine has a problem and is unable to print faxes in memory, you can use this setting to transfer your faxes to a PC. (For details, see *Error and maintenance messages* on page 142.)
- PC Fax Receive is not supported in Mac OS. (See *PC-FAX receiving* in the *Software User's Guide* on the CD-ROM.)

Changing Remote Fax Options

If received faxes are left in your machine's memory when you change to another Remote Fax Option, the LCD will ask you the following message:

```
Erase All Doc?
1.Yes 2.No
```

or

```
Print All Fax?
1.Yes 2.No
```

- If you press **1**, faxes in the memory will be erased or printed before the setting changes. If a backup copy has already been printed it will not be printed again.
- If you press **2**, faxes in the memory will not be erased or printed and the setting will be unchanged.

If received faxes are left in the machine's memory when you change to `PC Fax Receive` from another remote fax option (`Fax Forward` or `Fax Storage`), the LCD will ask you the following message:

```
Send Fax to PC?
1.Yes 2.No
```

- If you press **1**, faxes in the memory will be sent to your PC before the setting changes.
- If you press **2**, faxes in the memory will not be erased or transferred to your PC and the setting will be unchanged.

IMPORTANT

If you choose Backup Print On, the machine will also print the fax at your machine so you will have a copy. This is a safety feature in case there is a power failure before the fax is forwarded or a problem at the receiving machine. The machine can store faxes for up to 60 hours if there is a power failure.

Turning off Remote Fax Options

1. Press **Menu**, **2**, **5**, **1**.
2. Press ▲ or ▼ to choose `Off`.
   Press **OK**.

Note

The LCD will give you options if there are received faxes still in your machine's memory. (See *Changing Remote Fax Options* on page 74.)

3. Press **Stop/Exit**.

Remote retrieval

The remote retrieval feature lets you retrieve your stored fax messages when you are not at the machine. You can call your machine from any touch tone phone or fax machine, then use the Remote Access Code to retrieve your messages.

Setting a Remote Access Code

The Remote Access Code feature lets you access the remote retrieval features when you are away from your machine. Before you use the remote access and retrieval features, you have to set up your own code. The default code is an inactive code: – – –✳.

1. Press **Menu**, **2**, **5**, **2**.
2. Enter a three-digit code using the numbers **0** – **9**, ✳ or **#**.
   Press **OK**.
3. Press **Stop/Exit**.

Note

Do not use the same code used for your Remote Activation code (✳**51** (✳91 for New Zealand)) or Remote Deactivation code (**#51** (**#**91 for New Zealand)). (See *Changing the Remote Codes* on page 62.)

You can change your code at any time. If you want to make your code inactive, press **Clear/Back** and **OK** in ❷ to restore the default setting – – –✳.

Using your Remote Access Code

1. Dial your fax number from a telephone or another fax machine using touch tone.
2. When your machine answers, during a period of silence enter your Remote Access Code.
3. The machine signals if it has received messages:
   - *No beeps*

     No messages received.
   - *1 long beep*

     Fax message received.
4. The machine gives two short beeps to tell you to enter a command. The machine will hang up if you wait longer than 30 seconds before entering a command. If you enter an invalid command the machine will beep three times.
5. Press **9 0** to reset the machine when you have finished.
6. Hang up.

Note

- If your machine is set to `Manual` mode, you can still access the remote retrieval features. Dial the fax number as normal and let the machine ring. After 100 seconds you will hear a long beep to tell you to enter the remote access code. You will then have 30 seconds to enter the code.
- This function may not available in some countries e.g. Australia.

Retrieving fax messages

1. Dial your fax number from a telephone or another fax machine using touch tone.
2. When your machine answers, during a period of silence enter your Remote Access Code (3 digits followed by ∗). If you hear one long beep, you have messages.
3. When you hear two short beeps, use the dial pad to press **9 6 2**.
4. Wait for a long beep, and then use the dial pad to enter the number of the remote fax machine where you want your fax messages sent, followed by **##** (up to 20 digits).
5. Hang up after you hear your machine beep. Your machine will call the other machine, which will then print your fax messages.

Note

You can insert a pause in a fax number by using the # key.

Changing the Fax Forwarding number

You can change the default setting of your fax forwarding number from another telephone or fax machine using touch tone.

1. Dial your fax number from a telephone or another fax machine using touch tone.
2. When your machine answers, enter your Remote Access Code (3 digits followed by ∗) during a period of silence. If you hear one long beep, you have messages.
3. When you hear two short beeps, use the dial pad to press **9 5 4**.
4. Wait for a long beep, and then use the dial pad to enter the new number of the remote fax machine where you want your fax messages forwarded followed by **##** (up to 20 digits).
5. Press **9 0** to reset the machine when you have finished.
6. Hang up after you hear your machine beep.

Note

You can insert a pause in a fax number by using the # key.

Remote fax commands

Follow the commands below to access features when you are away from the machine. When you call the machine and enter your Remote Access Code (3 digits followed by ∗), the system will give two short beeps and you must enter a remote command.

Remote commands		Operation details
95	**Change the fax forwarding or fax storage settings**	
	1 OFF	You can choose `Off` after you have retrieved or erased all your messages.
	2 Fax Forwarding	One long beep means the change is accepted. If you hear three short beeps, you cannot change because the conditions have not been met (for example, registering a fax forwarding number). You can register the maximum number of rings. (See *Changing the Fax Forwarding number* on page 77.) Once you have registered the number, fax forwarding will work.
	4 Fax Forwarding number	
	6 Fax Storage	
96	**Retrieve a fax**	
	2 Retrieve all faxes	Enter the number of a remote fax machine to receive stored fax messages. (See *Retrieving fax messages* on page 76.)
	3 Erase faxes from the memory	If you hear one long beep, fax messages have been erased from the memory.
97	**Check the receiving status**	
	1 Fax	You can check whether your machine has received any faxes. If yes, you will hear one long beep. If no, you will hear three short beeps.
98	**Change the Receive Mode**	
	1 External TAD	If you hear one long beep, your change has been accepted.
	2 Fax/Tel	
	3 Fax Only	
90	**Exit**	Press **9 0** to exit remote retrieval. Wait for the long beep, then replace the handset.

10 Polling

Polling lets you set up your machine so other people can receive faxes from you, but they pay for the call. It also lets you call somebody else's fax machine and receive a fax from it, so you pay for the call. The polling feature needs to be set up on both machines for this to work. Not all fax machines support polling.

Polling receive

Polling receive lets you call another fax machine to receive a fax.

1. Make sure you are in Fax mode .
2. Press **Menu**, **2**, **1**, **8**.
3. Press ▲ or ▼ to choose `Standard`.
   Press **OK**.
4. Enter the fax number you are polling.
   Press **Start**.

Secure polling

Secure polling lets you restrict who can get the documents you set up to be polled. Secure polling only works with Brother fax machines. If you want to get a fax from a secured Brother machine you have to enter the secure code.

1. Make sure you are in Fax mode .
2. Press **Menu**, **2**, **1**, **8**.
3. Press ▲ or ▼ to choose `Secure`.
   Press **OK**.
4. Enter a four-digit secure code.
   Press **OK**.
   This is the security code of the fax machine you are polling.
5. Enter the fax number you are polling.
6. Press **Start**.

Delayed polling

Delayed polling lets you set the machine to begin polling receive at a later time. You can only set up *one* delayed polling operation.

1. Make sure you are in Fax mode .
2. Press **Menu**, **2**, **1**, **8**.
3. Press ▲ or ▼ to choose `Timer`.
   Press **OK**.
4. Enter the time (in 24-hour format) you want to begin polling.
   For example, enter 21:45 for 9:45 PM.
   Press **OK**.
5. Enter the fax number you are polling.
   Press **Start**.
   The machine makes the polling call at the time you entered.

Note

If the other fax machine that you are calling has not been set-up for Polling, you will receive the message `Connection Fail`.

Sequential polling

Sequential polling lets you request documents from several fax machines in one operation.

1. Make sure you are in Fax mode .
2. Press **Menu**, **2**, **1**, **8**.
3. Press ▲ or ▼ to choose `Standard`, `Secure` or `Timer`.
   Press **OK**.
4. Choose one of the options below.
   - If you choose `Standard` go to step ❺.
   - If you choose `Secure`, enter a four-digit number, press **OK**, go to step ❺.
   - If you chose `Timer`, enter the time (in 24-hours format) you want to begin polling and press **OK**, go to step ❺.

Note

If you did not enter the correct Secure Code, you will receive the message `Disconnected`.

5. Specify the destination fax machines you want to poll by using One Touch, Speed Dial, Search, a Group or the dial pad. You must press **OK** between each location.
6. Press **Start**.

Press **Stop/Exit** while the machine is dialling to cancel the polling process.

To cancel all sequential polling receive jobs, press **Menu**, **2**, **7**. (See *Checking and cancelling waiting jobs* on page 45.)

Polled transmit (black & white only)

Polled transmit lets you set up your machine to wait with a document so another fax machine can call and retrieve it.

Setup for polled transmit

1. Make sure you are in Fax mode .
2. Load your document.
3. Press **Menu**, **2**, **2**, **6**.
4. Press ▲ or ▼ to choose `Standard`.
   Press **OK**.
5. Press **2** to choose `2.No` if you do not want to enter more settings when the LCD asks you the following message:

```
Next
1.Yes 2.No
```

6. Press **Start**.
7. If you are using the scanner glass, the LCD will prompt you to choose one of the options below:

```
Next Page?
1.Yes 2.No(Send)
```

   - Press **1** to send another page. Go to step ❽.
   - Press **2** or **Start** to send the document.

8 Place the next page on the scanner glass, press **OK**. Repeat steps ❼ and ❽ for each additional page.
The document will be stored in memory until it is polled.

Note

The document will be stored and can be retrieved from any other fax machine until you delete the fax from memory.

To delete the fax from memory, press **Menu**, **2**, **7**. (See *Checking and cancelling waiting jobs* on page 45.)

Setup for polled transmit with a secure code

Secure polling lets you restrict who can get the documents you set up to be polled. Secure polling only works with Brother fax machines. If another person wants to retrieve a fax from your machine they will have to enter the secure code.

1 Make sure you are in Fax mode .

2 Load your document.

3 Press **Menu**, **2**, **2**, **6**.

4 Press ▲ or ▼ to choose `Secure`.
Press **OK**.

5 Enter a four-digit number.
Press **OK**.

6 Press **2** to choose `2.No` if you do not want to enter more settings when the LCD asks you the following message:

```
Next
1.Yes 2.No
```

7 Press **Start**.

8 If you use the scanner glass, the LCD will prompt you to choose one of the options below:

```
Next Page?
1.Yes 2.No(Send)
```

- Press **1** to send another page.

  Go to step ❾.

- Press **2** or **Start** to send the document.

9 Place the next page on the scanner glass, press **OK**. Repeat steps ❽ and ❾ for each additional page.

```
Set Next Page
Then Press OK
```

Your machine will automatically send the fax.

11 Printing reports

Fax reports

You need to set up the Transmission Verification Report and Journal Period using the **Menu** keys.

Transmission verification report

You can use the Transmission Verification Report as proof that you sent a fax. This report lists the receiving party's name or fax number, the time and date of transmission, duration of transmission, number of pages sent, and whether or not the transmission was successful.

There are several settings available for the Transmission Verification Report:

- `On`: Prints a report after every fax you send.
- `On+Image`: Prints a report after every fax you send. A portion of the fax's first page appears on the report.
- `Off`: Prints a report if your fax is unsuccessful due to a transmission error. Off is the default setting.
- `Off+Image`: Prints a report if your fax is unsuccessful due to a transmission error. A portion of the fax's first page appears on the report.

1. Press **Menu**, **2**, **4**, **1**.
2. Press ▲ or ▼ to choose `On`, `On+Image`, `Off` or `Off+Image`.
   Press **OK**.
3. Press **Stop/Exit**.

Note

- If you choose `On+Image` or `Off+Image`, the image will only appear on the Transmission Verification Report if Real Time Transmission is set to `Off`. (See *Real Time Transmission* on page 43.)
- If your transmission is successful, `OK` will appear next to `RESULT` on the Transmission Verification Report. If transmission is not successful, `ERROR` will appear next to `RESULT`.

Fax Journal

You can set the machine to print a fax journal (activity report) at specific intervals (every 50 faxes, 6, 12 or 24 hours, 2 or 7 days). The default setting is `Every 50 Faxes`, this means that your machine will print the journal when the machine has stored 50 jobs.

If you set the interval to `Off`, you can still print the report by following the steps on the next page.

1. Press **Menu**, **2**, **4**, **2**.
2. Press ▲ or ▼ to choose an interval. Press **OK**.
   If you choose 7 days, you will be asked to choose a day when you want the 7 day countdown to begin.
   If you choose `Every 50 Faxes`, the LCD shows `Accepted`. Then go to step ❹.
3. Enter the time to begin printing, in 24 hour format.
   For example: enter 19:45 for 7:45 PM.
   Press **OK**.
4. Press **Stop/Exit**.

If you choose 6, 12, 24 hours, 2 or 7 days, the machine will print the report at the selected time and then erase all jobs from its memory. If the machine's memory becomes full with 200 jobs before the time you chose has passed, the machine will print the journal early and then erase all jobs from memory.

If you want an extra report before it is due to print, you can print it manually without erasing the jobs from memory.

Reports

The following reports are available:

1 `XMIT Verify`

Displays the Transmission Verification Report for your last outgoing 200 faxes and prints the last report.

2 `Help List`

Prints a list of commonly used functions to help you program your machine.

3 `Tel Index List`

Prints a list of names and numbers stored in the One Touch and Speed Dial memory in numerical or alphabetical order.

4 `Fax Journal`

Prints a list of information about your last 200 incoming and outgoing faxes. (TX: transmit.) (RX: receive.)

5 `User Settings`

Print a list of your current settings.

6 `Network Config`

Lists your network settings.

7 `Order Form`

You can print an accessories order form to fill out and send to your Brother dealer.

How to print a report

MFC-9320CW:

1. Press **Menu**, **6**.
2. Do one of the following:
   - Press ▲ or ▼ to choose the report you want.

     Press **OK**.
   - Enter the number of the report you want to print. For example, press **2** to print the Help List.
3. Press **Mono Start** or **Colour Start**.
4. Press **Stop/Exit**.

MFC-9120CN:

1. Press **Reports**.
2. Do one of the following:
   - Press ▲ or ▼ to choose the report you want.

     Press **OK**.
   - Enter the number of the report you want to print. For example, press **2** to print the Help List.
3. Press **Mono Start** or **Colour Start**.
4. Press **Stop/Exit**.

Section III

Copy

Making copies 86

12 Making copies

How to copy

Entering copy mode

Press (**Copy**) to enter Copy mode.

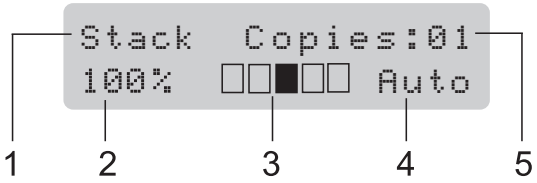

1 **Stack/Sort**

2 **Copy ratio and Copy layout**

3 **Contrast**

4 **Quality**

5 **Number of copies**

Making a single copy

1. Make sure you are in Copy mode .
2. Load your document in the ADF or on the scanner glass.
3. Press **Mono Start** or **Colour Start**.

Making multiple copies

1. Make sure you are in Copy mode .
2. Load your document.
3. Use the dial pad to enter the number of copies (up to 99).
4. Press **Mono Start** or **Colour Start**.

Note

- To sort your copies, see *Sorting copies using the ADF* on page 89.
- If the LCD shows "`Please Wait`" and the machine stops copying while you are making multiple copies, please wait for 30 to 40 seconds until the machine finishes the colour registrations and cleaning process of the belt unit.

Stop copying

To stop copying, press **Stop/Exit**.

Copy options (temporary settings)

When you want to quickly change the copy settings temporarily for the next copy, use the temporary **Copy** keys. You can use different combinations.

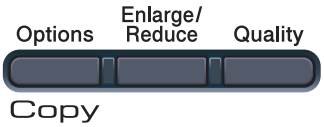

The machine returns to its default settings one minute after copying, unless you have set the Mode Timer to 30 seconds or less. (See *Mode Timer* on page 24.)

Enlarging or reducing the image copied

You can choose the following enlargement or reduction ratios:

Press	
	100%*
	97% LTR→A4
	94% A4→LTR
	91% Full Page
	85% LTR→EXE
	83% LGL→A4
	78% LGL→LTR
	70% A4→A5
	50%
	Custom(25-400%)
	200%
	141% A5→A4
	104% EXE→LTR

* The factory setting is shown in Bold with an asterisk.

`Custom(25-400%)` allows you to enter a ratio from `25%` to `400%` in 1% increments.

To enlarge or reduce the next copy follow the instructions below:

1. Make sure you are in Copy mode .
2. Load your document.
3. Use the dial pad to enter the number of copies (up to 99).
4. Press **Enlarge/Reduce**.
5. Do one of the following:
   - Press ▲ or ▼ to choose the enlargement or reduction ratio you want.

     Press **OK**.
   - Press ▲ or ▼ to choose `Custom(25-400%)`.

     Press **OK**.

     Use the dial pad to enter an enlargement or reduction ratio from `25%` to `400%`. (For example, press **5 3** to enter `53%`.)

     Press **OK**.
6. Press **Mono Start** or **Colour Start**.

Note

- Page Layout Options 2 in 1(P), 2 in 1(L), 4 in 1(P) or 4 in 1(L) are *not* available with Enlarge/Reduce.
- (P) means Portrait and (L) means Landscape.

Using the Options key

Use the **Options** key to quickly set the following copy settings temporarily for the next copy.

Press	Menu selections	Options	Page
Options	Press ▲ or ▼, then press **OK**	Press ▲ or ▼, then press **OK**	
	Stack/Sort (appears when the document is in the ADF)	**Stack*** Sort	89
	Brightness	▼ -■□□□□+ ▲ ▼ -□■□□□+ ▲ ▼ **-□□■□□+ ▲*** ▼ -□□□■□+ ▲ ▼ -□□□□■+ ▲	90
	Contrast	▼ -■□□□□+ ▲ ▼ -□■□□□+ ▲ ▼ **-□□■□□+ ▲*** ▼ -□□□■□+ ▲ ▼ -□□□□■+ ▲	89
	Page Layout	**Off(1 in 1)*** 2 in 1 (P) 2 in 1 (L) 4 in 1 (P) 4 in 1 (L)	90
The factory settings are shown in Bold with an asterisk.			

Improving copy quality

You can choose from a range of quality settings. The default setting is Auto.

- Auto

  Auto is the recommended mode for ordinary printouts. Suitable for documents that contain both text and photographs.

- Photo

  Suitable for copying photographs.

- Text

  Suitable for documents containing only text.

To *temporarily* change the quality setting, follow the steps below:

1. Make sure you are in Copy mode .
2. Load your document.
3. Use the dial pad to enter the number of copies (up to 99).
4. Press **Quality**.
5. Press ▲ or ▼ to choose Auto, Photo or Text.
   Press **OK**.
6. Press **Mono Start** or **Colour Start**.

To change the *default* setting, follow the steps below:

1. Press **Menu**, **3**, **1**.
2. Press ▲ or ▼ to choose the copy quality.
   Press **OK**.
3. Press **Stop/Exit**.

Sorting copies using the ADF

You can sort multiple copies. Pages will be stacked in the order 1 2 3, 1 2 3, 1 2 3, and so on.

1. Make sure you are in Copy mode .
2. Load your document in the ADF.
3. Use the dial pad to enter the number of copies (up to 99).
4. Press **Options**. Press ▲ or ▼ to choose Stack/Sort.
   Press **OK**.
5. Press ▲ or ▼ to choose Stack or Sort.
   Press **OK**.
6. Press **Mono Start** or **Colour Start**.

Adjusting Contrast, Colour and Brightness

Contrast

Adjust the contrast to help an image look sharper and more vivid.

To *temporarily* change the contrast setting, follow the steps below:

1. Make sure you are in Copy mode .
2. Load your document.
3. Use the dial pad to enter the number of copies (up to 99).
4. Press **Options**.
   Press ▲ or ▼ to choose Contrast.
   Press **OK**.
5. Press ▲ or ▼ to increase or decrease the contrast.
   Press **OK**.
6. Press **Mono Start** or **Colour Start**.

To change the *default* setting follow the steps below:

1. Press **Menu**, **3**, **3**.
2. Press ▲ or ▼ to increase or decrease the contrast.
   Press **OK**.
3. Press **Stop/Exit**.

Brightness

Adjust the copy brightness to make copies darker or lighter.

To *temporarily* change the copy brightness setting, follow the steps below:

1. Make sure you are in Copy mode [ ].
2. Load your document.
3. Use the dial pad to enter the number of copies (up to 99).
4. Press **Options**.
   Press ▲ or ▼ to choose `Brightness`.
   Press **OK**.
5. Press ▲ to make a lighter copy or press ▼ to make a darker copy.
   Press **OK**.
6. Press **Mono Start** or **Colour Start**.

To change the *default* setting follow the steps below:

1. Press **Menu**, **3**, **2**.
2. Press ▲ to make a lighter copy or press ▼ to make a darker copy.
   Press **OK**.
3. Press **Stop/Exit**.

Colour saturation

You can change the default setting for colour saturation.

To change the *default* setting follow the steps below:

1. Press **Menu**, **3**, **4**.
2. Press ▲ or ▼ to choose `1.Red`, `2.Green`, or `3.Blue`.
   Press **OK**.
3. Press ▲ or ▼ to increase or decrease the colour saturation.
   Press **OK**.
4. Return to step ❷ to choose the next colour. Or press **Stop/Exit**.

Making N in 1 copies (page layout)

You can reduce the amount of paper used when copying by using the N in 1 copy feature. This allows you to copy two or four pages onto one page, which lets you save paper.

IMPORTANT

- Please make sure the paper size is set to `Letter`, `A4`, `Legal` or `Folio`.
- (`P`) means Portrait and (`L`) means Landscape.
- You cannot use the Enlarge/Reduce setting with the N in 1 feature.

1. Make sure you are in Copy mode [ ].
2. Load your document.
3. Use the dial pad to enter the number of copies (up to 99).
4. Press **Options**. Press ▲ or ▼ to choose `Page Layout`. Press **OK**.

5 Press ▲ or ▼ to choose `2 in 1 (P)`, `2 in 1 (L)`, `4 in 1 (P)`, `4 in 1 (L)` or `Off(1 in 1)`.
Press **OK**.

6 Press **Mono Start** or **Colour Start** to scan the page.
If you placed the document in the ADF, the machine scans the pages and starts printing.
If you are using the scanner glass, go to step ❼.

7 After the machine scans the page, press **1** to scan the next page.

```
Next Page?
1.Yes 2.No
```

8 Put the next page on the scanner glass. Press **OK**.
Repeat steps ❼ and ❽ for each page of the layout.

9 After all the pages have been scanned, press **2** in step ❼ to finish.

If you are copying from the ADF:

Insert your document face up in the direction shown below:

■ **2 in 1 (P)**

■ **2 in 1 (L)**

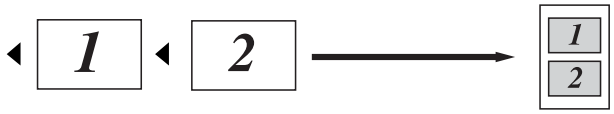

■ **4 in 1 (P)**

■ **4 in 1 (L)**

If you are copying from the scanner glass:

Insert your document face down in the direction shown below:

■ **2 in 1 (P)**

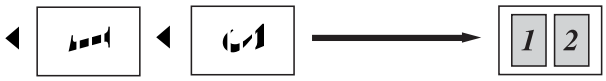

■ **2 in 1 (L)**

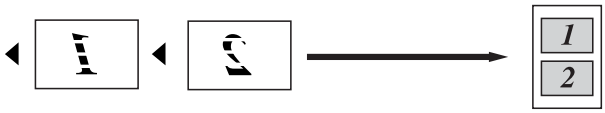

■ **4 in 1 (P)**

■ **4 in 1 (L)**

Out of memory message

If the memory becomes full while you are making copies, the LCD message will guide you through the next step.

If you get an `Out of Memory` message while scanning a subsequent page, you will have the option to press **Mono Start** or **Colour Start** to copy the pages scanned so far, or to press **Stop/Exit** to cancel the operation.

To gain extra memory, you can do the following:

- Print the faxes that are in the memory. (See *Printing a fax from the memory* on page 51.)
- You can turn off Fax Storage. (See *Turning off Remote Fax Options* on page 75.)
- Add optional memory. (See *Memory board* on page 123.)

Note

When you get an `Out of Memory` message, you may be able to make copies if you first print any incoming faxes in the memory to restore the memory to 100%.

Section IV

Direct printing

Printing photos from a digital camera (MFC-9320CW only) 94

Printing data from a USB Flash memory drive (MFC-9320CW only) 99

13 Printing photos from a digital camera (MFC-9320CW only)

Your Brother machine supports the PictBridge standard, allowing you to connect to and print photos directly from any PictBridge compatible digital camera.

Even if your camera is not in PictBridge mode or does not support PictBridge, you can connect your camera as a normal storage device. This enables you to print photos from your camera. Follow the steps for "*Printing data from a USB Flash memory drive (MFC-9320CW only)* on page 99".

Before using PictBridge

PictBridge requirements

To avoid errors, remember the following points:

- The machine and the digital camera must be connected using a suitable USB cable.
- The image file must be taken with the digital camera you want to connect to the machine.

Using PictBridge

Setting your digital camera

Make sure your camera is in PictBridge mode. The following PictBridge settings may be available from the LCD of your PictBridge compatible camera. Depending on your camera some of these settings may not be available.

- Copies
- Qualities
- Paper size
- Date print
- File name print
- Layout (1 in 1 printing/Index printing only)

Note

The names and availability of each setting depends on the specification of your camera.

You can also set the following PictBridge settings by using the control panel.

Menu selections	Options
Paper Size	Letter, A4, B5, A5, B6, A6
Orientation	Portrait, Landscape [1]
Date & Time	Off, On
File Name	Off, On
Print Quality	Normal, Fine

[1] If you choose the paper size Letter, A4 or B5, Portrait will be chosen. If you choose A5, B6 or A6, Landscape will be chosen.

1. Press **Menu**, **5**, **3**.

```
USB Direct I/F
3.PictBridge
```

2. To set the PictBridge settings, press ▲ or ▼ to choose `1.Paper Size`, `2.Orientation`, `3.Date & Time`, `4.File Name`, or `5.Print Quality`. Press **OK**.

3. Press ▲ or ▼ to choose an option for each menu setting.
   Press **OK**.
   Repeat ❷ to ❸ for each PictBridge setting.

4. Press **Stop/Exit**.

Note

- Camera settings are prioritized as long as your camera is not set to use your machine's settings (default settings). If your camera is set to use your machine's settings, the machine will print your photo using the settings below.

Machine settings	Default settings
Paper Size	A4
Orientation	Portrait
Date & Time	Off
File Name	Off
Print Quality	Normal

- Please refer to the documentation supplied with your camera for more detailed information on changing PictBridge settings.

Printing images

1. Make sure that your camera is turned off. Connect your camera to the USB direct interface (1) on the front of the machine using a suitable USB cable.

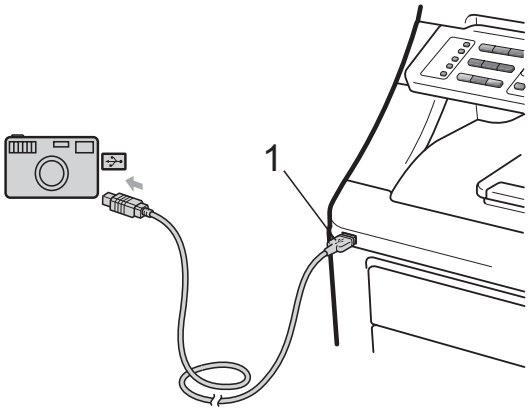

2. Turn on the camera. Make sure your camera is in PictBridge mode.
   When the machine has recognized the camera, the LCD shows the following message depending on which mode the machine is in:

```
04/20 15:30 Fax
Camera Connected
```

```
Scan:Select ▲▼
Camera Connected
```

```
Stack  Copies:01
Camera Connected
```

3. Set your camera to print an image. Set the number of copies if you are asked.

   When the machine starts printing an image, the LCD shows the following message:

```
PictBridge
Printing. Kee...
```

Note

Please refer to the documentation supplied with your camera for detailed operations how to print using PictBridge.

IMPORTANT

- To prevent damage to your machine, do not connect any device other than a digital camera or USB flash memory drive to the USB direct interface.
- DO NOT remove the digital camera from the USB direct interface until the machine has finished printing.

DPOF printing

DPOF stands for Digital Print Order Format.

Major digital camera manufacturers (Canon Inc., Eastman Kodak Company, FUJIFILM Corporation, Panasonic Corporation and Sony Corporation) created this standard to make it easier to print images from a digital camera.

If your digital camera supports DPOF printing, you will be able to choose on the digital camera display the images and number of copies you want to print.

The following DPOF settings are available.

- 1 in 1 printing
- Copies

Printing images with Secure Function Lock 2.0 enabled (MFC-9320CW only)

For more information about Secure Function Lock 2.0, see Chapter 11 of the Network User's Guide on the CD-ROM we have supplied.

1. Make sure that your camera is turned off. Connect your camera to the USB direct interface (1) on the front of the printer using a suitable USB cable.

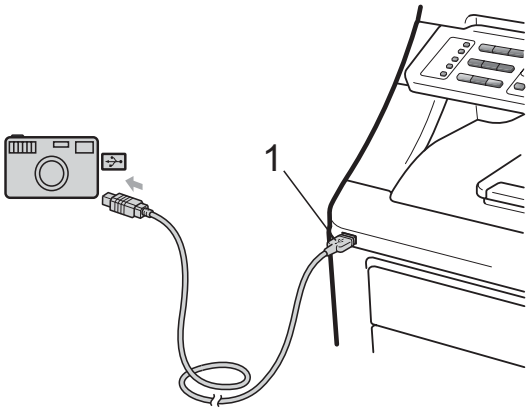

2. Turn on the camera. Make sure your camera is in PictBridge mode.
When the machine has recognized the camera, the LCD shows the following message.

```
Access Denied
```

3. Press ▲ or ▼ to choose ID. Press **OK**.

4 Enter the password. Press **OK**.

```
Change ID
PIN:XXXX
```

Note

If your ID has restricted options, the following messages appear on the LCD.

Message	Meaning
Access Denied	Printing documents directly from a camera to the Brother machine is restricted.
Limit Exceeded	The number of pages you are allowed to print is exceeded. The print job will be cancelled.
Mono Print Only	Printing colour documents is restricted.
Not Available	Printing pictures directly from a camera to the Brother machine is restricted.

5 The LCD shows the following message depending on which mode the machine is in:

```
04/20 15:30 Fax
Camera Connected
```

```
Scan:Select ▲▼
Camera Connected
```

```
Stack  Copies:01
Camera Connected
```

6 Set your camera to print an image. Set the number of copies if you are asked. When the machine starts printing an image, the LCD will show the following message:

```
PictBridge
Printing. Kee...
```

Note

Please refer to the documentation supplied with your camera for detailed operations how to print using PictBridge.

IMPORTANT

DO NOT remove the digital camera from the USB direct interface until the printer has finished printing.

Connecting a camera as a storage device

Even if your camera is not in PictBridge mode, or does not support PictBridge, you can connect your camera as a normal storage device. This enables you to print photos from your camera.

Follow the steps in *Printing data directly from the USB Flash memory drive (MFC-9320CW only)* on page 100.

(If you would like to print photos in PictBridge mode, see *Setting your digital camera* on page 94.)

Note

The name of the storage mode and operation differs among digital cameras. Please refer to the documentation supplied with your camera for detailed information, such as how to switch from PictBridge mode to mass storage mode.

Understanding the error messages

Once you are familiar with the types of errors that can occur while you are using the PictBridge, you can easily identify and troubleshoot any problems.

- `Out of Memory`

  This message will appear if you are working with images that are too large for the machine's memory.

- `Unusable Device`

  This message will appear if you connect an incompatible or broken device to the USB direct interface. To clear the error, unplug the device from the USB direct interface.

(For more detailed solutions, see *Error and maintenance messages* on page 142.)

14 Printing data from a USB Flash memory drive (MFC-9320CW only)

With the Direct Print feature, you do not need a computer to print data. You can print by just plugging your USB Flash memory drive into the machine's USB direct interface.

Note

Some USB Flash memory drives may not work with the machine.

Supported file formats

Direct Print supports the following file formats:

- PDF version 1.7 [1]
- JPEG
- Exif + JPEG
- PRN (created by Brother driver)
- TIFF (scanned by all MFC or DCP Brother models)
- PostScript® 3™ (created by the Brother BRScript3 printer driver)
- XPS version 1.0

[1] PDF data that includes a JBIG2 image file, a JPEG2000 image file or a transparency file is not supported.

Creating a PRN or PostScript® 3™ file for direct printing

Note

The screens in this section may vary depending on your application and operating system.

1. From the menu bar of an application, click **File**, then **Print**.
2. Choose **Brother MFC-XXXX Printer** (1) and check the **Print to file** box (2). Click **Print**.

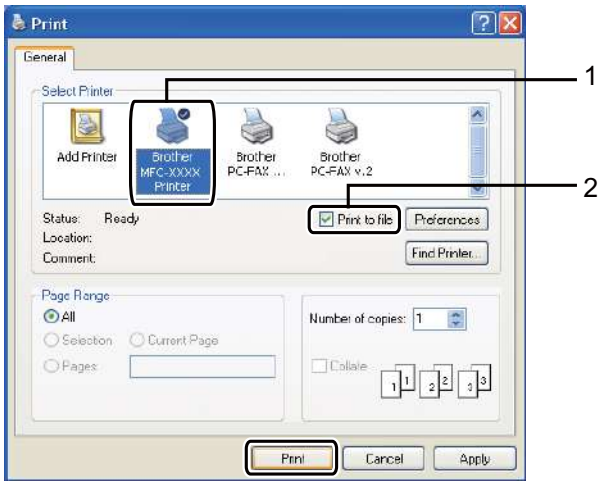

3. Choose the folder you want to save the file to and enter the file name if you are prompted to.
   If you are prompted for a file name only, you can also specify the folder you want to save the file in by entering the directory name. For example: C:\Temp\FileName.prn
   If you have a USB Flash memory drive or digital camera connected to your computer, you can save the file directly to the USB Flash memory drive.

Printing data directly from the USB Flash memory drive (MFC-9320CW only)

1. Connect your USB Flash memory drive to the USB direct interface (1) on the front of the machine.
   The **Direct** key will light up. Press **Direct**. Your machine will enter Direct Print Mode.

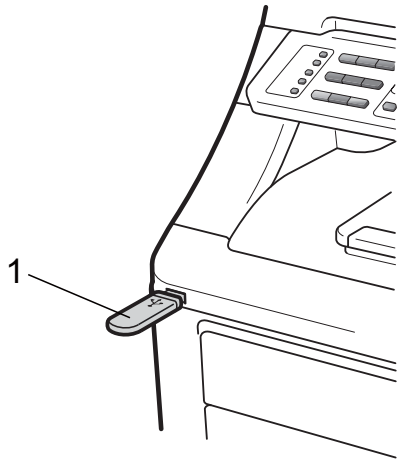

2. Press ▲ or ▼ to choose the folder name or file name you want to print.
   Press **OK**.
   If you have chosen the folder name, press ▲ or ▼ to choose the file name you want to print.
   Press **OK**.

```
Direct Print
1.FILE_1.PDF
```

Note

- If you want to print an index of the files, choose `Index Print`, and then press **OK**. Press **Mono Start** or **Colour Start** to print the data.
- File names that are stored in your USB Flash memory drive can be displayed the following characters on the LCD: A B C D E F G H I J K L M N O P Q R S T U V W X Y Z 0 1 2 3 4 5 6 7 8 9 $ % ' ` - @ { } ~ ! # ( ) & _ ^

3. Do one of the following:
   - Press ▲ or ▼ to choose a setting you need to change and press **OK**, and then press ▲ or ▼ to choose an option for the setting and press **OK**.
   - If you do not need to change the current default settings, go to step ❹.

```
Print File Set
Paper Size      ⇕
```

Note

- You can choose the following settings:

  `Paper Size`

  `Media Type`

  `Multiple Page`

  `Orientation`

  `Collate`

  `Print Quality`

  `PDF Option`
- Depending on the file type, some of these settings may not appear.

4. Press **Mono Start** or **Colour Start** if you have finished.

5. Press the dial pad key to enter the number of copies you want.
   Press **OK**.

```
Copies
=  1
```

6 Press **Mono Start** or **Colour Start** to print the data.

IMPORTANT

- To prevent damage to your machine, DO NOT connect any device other than a digital camera or USB Flash memory drive to the USB direct interface.
- DO NOT remove the USB Flash memory drive or digital camera from the USB direct interface until the machine has finished printing.

Note

You can change the default settings for Direct Print by using the control panel when the machine is not in the Direct Print mode. Press **Menu**, **5** to enter the `USB Direct I/F` menu. (See *Entering text* on page 213.)

Printing data directly from the USB flash memory drive with Secure Function Lock 2.0 enabled (MFC-9320CW only)

For more information about Secure Function Lock 2.0, see Chapter 11 of the Network User's Guide on the CD-ROM we have supplied.

1 Connect your USB Flash memory drive to the USB direct interface (1) on the front of the machine.
The **Direct** key will light up. Press **Direct**. Your machine will enter Direct Print Mode.

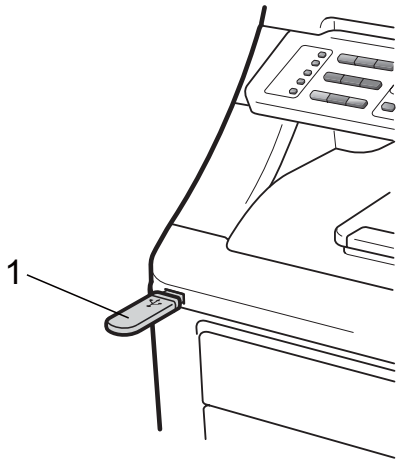

2 The following message appears if Secure Function Lock is on.

```
Access Denied
```

3 Press ▲ or ▼ to choose ID. Press **OK**.

4 Enter the password. Press **OK**.

```
Change ID
PIN:XXXX
```

Note

If your ID has the restricted options, the following messages appear on the LCD.

Message	Meaning
Access Denied	Printing documents directly from the USB flash memory drive to the Brother machine is restricted.
Limit Exceeded	The number of pages you are allowed to print is exceeded. The print job will be cancelled.
No Permission	You have attempted to print in colour using an ID that is restricted to mono printing only. The print job will be cancelled.
Mono Print Only	Appears at log in for users who are restricted to mono printing only.
Not Available	Printing pictures directly from the USB Flash memory drive to the Brother machine is restricted.

5 The file names appear if the password is correct.
Press ▲ or ▼ to choose the folder name or file name you want to print.
Press **OK**.
If you have chosen the folder name, press ▲ or ▼ to choose the file name you want to print.
Press **OK**.

```
Direct Print
1.FILE_1.PDF
```

Note

- If you want to print an index of the files, choose `Index Print`, and then press **OK**. Press **Mono Start** or **Colour Start** to print the data.
- File names containing more than 8 characters will appear on the LCD as the first 6 characters of the file name followed by a tilde mark (~) and a number.
For example, “HOLIDAY2007.JPG” would appear as “HOLIDA~1.JPG”.
Only the following characters can be displayed on the LCD:
A B C D E F G H I J K L M N O P Q R S T U V W X Y Z 0 1 2 3 4 5 6 7 8 9 $ % ’ ` - @ { } ~ ! # ( ) & _ ^

6 Do one of the following:

- Press ▲ or ▼ to choose a setting you need to change and press **OK**, and then press ▲ or ▼ to choose an option for the setting and press **OK**.
- If you do not need to change the current default settings, go to step ❼.

```
Print File Set
Paper Size      ⬍
```

Note

- You can choose the following settings:

  `Paper Size`

  `Media Type`

  `Multiple Page`

  `Orientation`

  `Collate`

  `Print Quality`

  `PDF Option`

- Depending on the file type, some of these settings may not appear.

7 Press **Mono Start** or **Colour Start** if you have finished.

8 Press the dial pad key to enter the number of copies you want.
Press **OK**.

```
Copies
=  1
```

9 Press **Mono Start** or **Colour Start** to print the data.

IMPORTANT

DO NOT remove the USB flash memory from the USB direct interface until the printer has finished printing.

Understanding the error messages

Once you are familiar with the types of errors that can occur while you print data from the USB Flash memory drive with Direct Print, you can easily identify and troubleshoot any problems.

- `Out of Memory`

  This message will appear if you are working with images that are too large for the machine's memory.

- `Unusable Device`

  This message will appear if you connect an incompatible or broken device to the USB direct interface. To clear the error, unplug the device from the USB direct interface.

(See *Error and maintenance messages* on page 142 for the detailed solution.)

Section V

Software

Software and Network features 106

15 Software and Network features

The User's Guide on the CD-ROM includes the **Software User's Guide** and **Network User's Guide** for features available when connected to a computer (for example, printing and scanning). These guides have easy to use links that, when clicked, will take you directly to a particular section.
You can find information on these features:

- Printing
- Scanning
- ControlCenter3 (Windows®)
- ControlCenter2 (Macintosh)
- Remote Setup
- Faxing from your computer
- Network Faxing
- Network Printing
- Network Scanning
- Wireless Network Users (MFC-9320CW only)

Note

See *Accessing the Software User's Guide and Network User's Guide* on page 3.

How to read the HTML User's Guide

This is a quick reference for using the HTML User's Guide.

Windows®

Note

If you have not installed the software, see *Viewing documentation (Windows®)* on page 3.

1. From the **Start** menu, point to **Brother**, **MFC-XXXX** from the programs group, then click **User's Guides in HTML format**.
2. Click on the manual you want (**SOFTWARE USER'S GUIDE** or **NETWORK USER'S GUIDE**) from the Top Menu.

3. Click the heading you would like to view from the list at the left of the window.

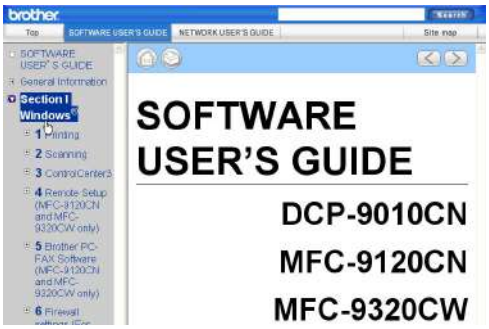

Macintosh

1. Make sure your Macintosh is turned on. Insert the Brother CD-ROM into your CD-ROM drive.
2. Double-click the **Documentation** icon.
3. Double-click your language folder, and then double-click **top.html**.
4. Click on the manual you want (**SOFTWARE USER'S GUIDE** or **NETWORK USER'S GUIDE**) in the top menu, and then click the heading you would like to read from the list at the left of the window.

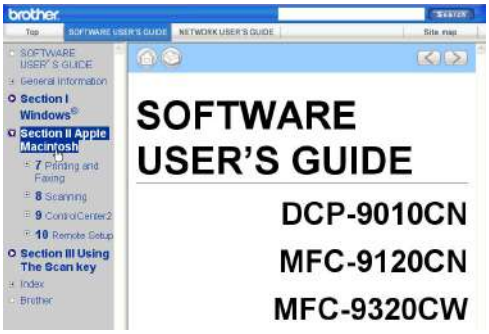

Section VI

Appendixes

Safety and legal	108
Options	123
Troubleshooting and routine maintenance	125
Menu and features	193
Specifications	215
Glossary	234

A Safety and legal

Choosing a location

Put your machine on a flat, level, stable surface that is free of vibration and shocks, such as a desk. Put the machine near a telephone socket and a standard grounded electrical socket. Choose a location where the temperature remains between 10 °C and 32.5 °C and the humidity is between 20% to 80% (without condensation).

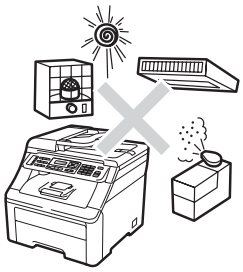

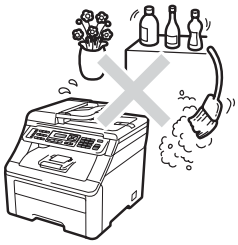

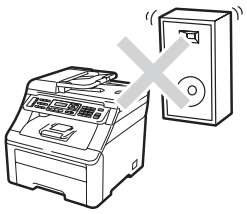

WARNING

DO NOT expose the machine to direct sunlight, excessive heat, open flames, salty or corrosive gasses, moisture or dust.

DO NOT place the machine near heaters, air conditioners, refrigerators, water or chemicals.

CAUTION

Avoid placing your machine in a high-traffic area.

Avoid placing your machine on a carpet.

DO NOT connect your machine to electrical sockets controlled by wall switches or automatic timers, or to the same circuit as large appliances that might disrupt the power supply.

Disruption of power can delete information from the machine’s memory.

Avoid interference sources, such as other cordless telephone systems or speakers.

Make sure cables leading to the machine do not constitute a trip hazard.

To use the machine safely

Please keep these instructions for later reference and read them before attempting any maintenance.

WARNING

There are high voltage electrodes inside the machine. Before you clean the inside of the machine, make sure you have unplugged the telephone line cord first and then the power cord from the electrical socket. Doing this will prevent an electrical shock.

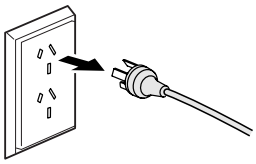

DO NOT handle the plug with wet hands. Doing this might cause an electrical shock.

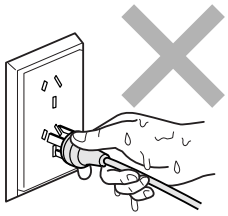

Always make sure the plug is fully inserted.

This product must be installed near an electrical socket that is easily accessible. In case of an emergency, you must unplug the power cord from the electrical socket to shut off the power completely.

Plastic bags are used in the packing of your machine and drum units. To avoid the danger of suffocation, keep these bags away from babies and children.

DO NOT use flammable substances, any type of spray or any organic solvent/liquids contains alcohol or ammonia to clean the inside or outside of the machine. Doing this may cause a fire or electrical shock. See *Routine maintenance* on page 155 for how to clean the machine.

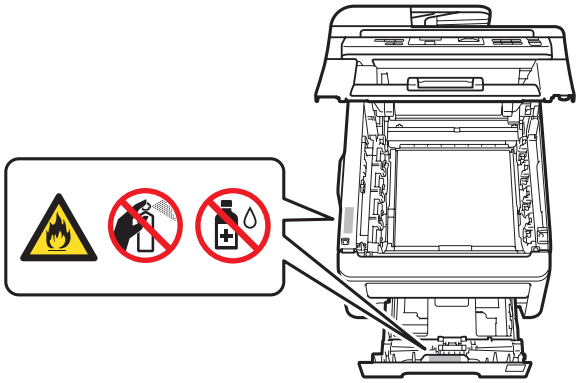

DO NOT use a vacuum cleaner to clean up scattered toner. Doing this might cause the toner dust to ignite inside the vacuum cleaner, potentially starting a fire. Please carefully clean the toner dust with a dry, lint-free soft cloth and dispose of it according to local regulations.

This machine is heavy and weighs approximately 22.9 kg. To prevent injuries when moving or lifting this machine, make sure to use at least two people. Be careful not to pinch your fingers when you set the machine back down.

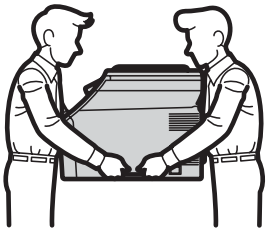

Use caution when installing or modifying telephone lines. Never touch telephone wires or terminals that are not insulated unless the telephone line has been unplugged at the wall socket. Never install telephone wiring during a lightning storm. Never install a telephone wall socket in a wet location.

When using your telephone equipment, basic safety precautions should always be followed to reduce the risk of fire, electrical shock and injury to people, including the following:

1 DO NOT use this product near water, for example, near a bath tub, wash bowl, kitchen sink or washing machine, in a wet basement or near a swimming pool.

2 Avoid using this product during an electrical storm. There may be a remote risk of electric shock from lightning.

3 DO NOT use this product to report a gas leak in the vicinity of the leak.

4 DO NOT dispose of batteries in a fire. They may explode. Check with local codes for possible special disposal instructions.

5 We DO NOT advise using an extension lead.

6 Never install telephone wiring during a lightning storm. Never install a telephone wall socket in a wet location.

7 If any cables become damaged, disconnect your machine, and contact your Brother dealer.

8 DO NOT place any objects on the machine, or obstruct the air vents.

9 This product should be connected to an adjacent grounded AC power source within the range indicated on the rating label. DO NOT connect it to a DC power source or inverter. If you are not sure, contact a qualified electrician.

SAVE THESE INSTRUCTIONS

⚠ CAUTION

After you have just used the machine, some internal parts of the machine will be extremely hot. To prevent injury, when you open the top or back cover (back output tray) of the machine, DO NOT touch the shaded parts shown in the illustration.

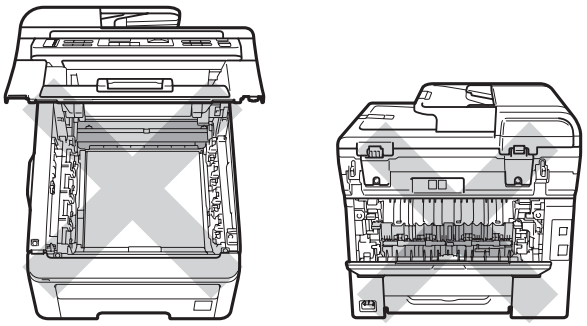

To prevent injuries, be careful not to put your hands on the edge of the machine under the document cover, the scanner, or the top cover as shown in the illustrations.

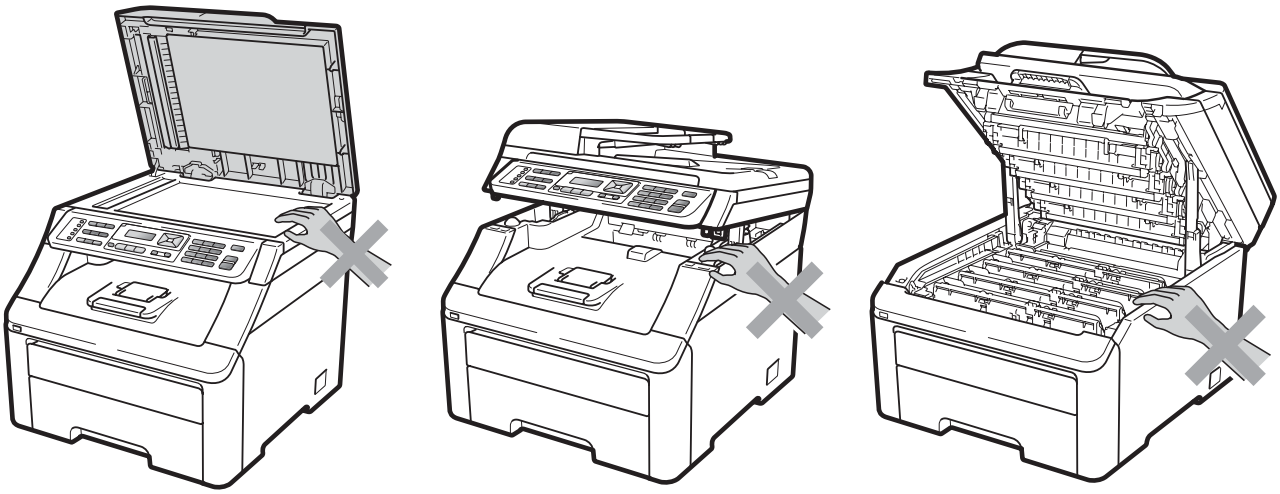

To prevent injuries, be careful not to put your fingers in the areas shown in the illustrations.

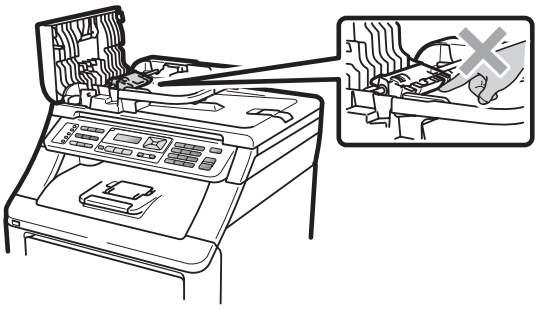

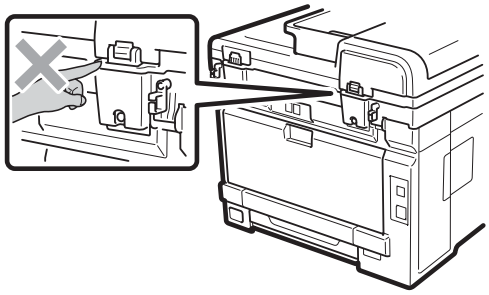

IMPORTANT

The fuser unit is marked with a caution label. Please DO NOT remove or damage the label.

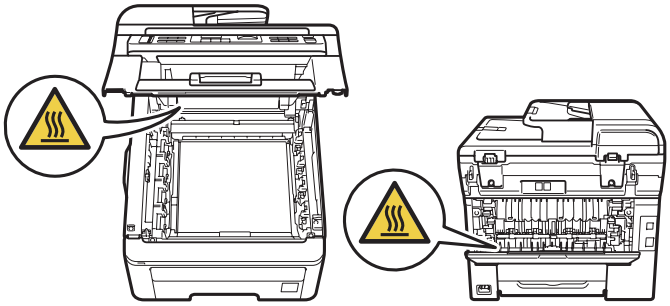

Disconnect device

This product must be installed near an electrical socket that is easily accessible. In case of emergencies, you must disconnect the power cord from the electrical socket to shut off power completely.

LAN connection

⚠ CAUTION

DO NOT connect this product to a LAN connection that is subject to over-voltages.

Radio interference

This product complies with EN55022 (CISPR Publication 22)/Class B.

International ENERGY STAR® Qualification Statement

The purpose of the International ENERGY STAR® Program is to promote the development and popularization of energy-efficient office equipment.

As an ENERGY STAR® Partner, Brother Industries, Ltd. has determined that this product meets the ENERGY STAR® specifications for energy efficiency.

Important Information for Australia

IMPORTANT-For Your Safety

To ensure safe operation the three-pin plug supplied must be inserted only into a standard threepin power point which is effectively grounded through the normal household wiring.

Extension cords used with the equipment must be three-conductor and be correctly wired to provide connection to ground. Incorrectly wired extension cords are a major cause of fatalities.

The fact that the equipment operates satisfactorily does not imply that the power is grounded and that the installation is completely safe. For your safety, if in any doubt about the effective grounding of the power, consult a qualified electrician.

Important Safety Instructions

1 Read all of these instructions.

2 Save them for later reference.

3 Follow all warnings and instructions marked on the product.

4 Unplug this product from the wall socket before cleaning the outside of the machine and the scanner glass. DO NOT use liquid or aerosol cleaners. Use a damp cloth for cleaning.

5 DO NOT use this product near water.

6 DO NOT place this product on an unstable cart, stand, or table. The product may fall, causing serious damage to the product.

7 Slots and openings in the casing at the back or bottom are provided for ventilation; to ensure reliable operation of the product and to protect it from overheating, these openings must not be blocked or covered. The openings should never be blocked by placing the product on a bed, sofa, rug, or other similar surface. This product should never be placed near or over a radiator or heater. This product should never be placed in a built-in installation unless adequate ventilation is provided.

8 This product should be connected to an AC power source within the range indicated on the rating label. DO NOT connect it to a DC power source or inverter. If you are not sure, contact a qualified electrician.

9 This product is equipped with a 3-wire grounded plug, a plug having a third (grounded) pin. This plug will only fit into a grounded power outlet. This is a safety feature. If you are unable to insert the plug into the outlet, call your electrician to replace your obsolete outlet. DO NOT defeat the purpose of the grounded plug.

10 Use the product in a well-ventilated area.

11 DO NOT place anything on top of the power cord including this machine. DO NOT allow the power cord to be stepped on.

12 DO NOT place anything in front of the machine that will block received faxes. DO NOT place anything in the path of received faxes.

13 DO NOT touch a document during printing.

14 Never push objects of any kind into this product through cabinet slots, since they may touch dangerous voltage points or short out parts resulting in a risk of fire or electric shock. Never spill liquid of any kind on the product.

15 DO NOT attempt to service this product yourself, because opening or removing covers may expose you to dangerous voltage points and/or other risks. Refer all servicing to service personnel

16 Wait until pages have exited the machine before picking them up.

17 Unplug this product from the wall outlet and refer servicing to Authorised Service Personnel under the following conditions:

- When the power cord is damaged or frayed.
- If liquid has been spilled into the product.
- If the product has been exposed to rain or water.
- If the product does not operate normally when the operating instructions are followed. Adjust only those controls that are covered by the operating instructions. Incorrect adjustment of other controls may result in damage and will often require extensive work by a qualified technician to restore the product to normal operation.
- If the product has been dropped or the casing has been damaged.
- If the product exhibits a distinct change in performance, indicating a need for service.

Important Information for New Zealand

IMPORTANT-For Your Safety

To ensure safe operation the three-pin plug supplied must be inserted only into a standard threepin power point which is effectively grounded through the normal household wiring.

Extension cords used with the equipment must be three-conductor and be correctly wired to provide connection to ground. Incorrectly wired extension cords are a major cause of fatalities.

The fact that the equipment operates satisfactorily does not imply that the power is grounded and that the installation is completely safe. For your safety, if in any doubt about the effective grounding of the power, consult a qualified electrician.

Important Safety Instructions

1 Read all of these instructions.

2 Save them for later reference.

3 Follow all warnings and instructions marked on the product.

4 Unplug this product from the wall outlet before cleaning the outside of the machine and the scanner glass. DO NOT use liquid or aerosol cleaners. Use a damp cloth for cleaning.

5 The grant of a Telepermit for any item of terminal equipment indicates only that Telecom has accepted that the item complies with minimum conditions for connection to its network. It indicates no endorsement of the product by Telecom, nor does it provide any sort of warranty. Above all, it provides no assurance that any item will work correctly in all respects with another item of Telepermitted equipment of a different make or model, nor does it imply that any product is compatible with all of Telecom's network services.

6 This equipment does not fully meet Telecom's impedance requirements. Performance limitations may occur when used in conjunction with some parts of the network. Telecom will accept no responsibility should difficulties arise in such circumstances.

7 If a charge for local calls is acceptable, the "Dial Button" should not be used for local calls. Only the 7-digits of the local number should be dialled from your telephone. DO NOT dial the area code digit or the "0 " prefix.

8 This equipment shall not be set to make automatic calls to the Telecom '111 ' Emergency Service.

9 This equipment should not be used under any circumstances which may constitute a nuisance to other Telecom customers.

10 Not all telephones will respond to incoming ringing when connected to the extension socket.

11 The answer delay setting of this equipment shall not be set to less than the default setting as this will destroy Caller ID information.

12 All persons using this device for recording telephone conversations shall comply with New Zealand law. This requires that at least one party to the conversation is to be aware that it is being recorded. In addition, the Principles enumerated in the Privacy Act 1993 shall be complied with in respect to the nature of the personal information collected, the purpose for its collection, how it is to be used and what it disclosed to any other party.

13 DO NOT place this product on an unstable surface, stand, or table. The product may fall, causing serious damage to the product.

14 Slots and openings in the casing and the back or bottom are provided for ventilation; to ensure reliable operation of the product and to protect it from overheating, these openings must not be blocked or covered. The openings should never be blocked by placing the product on a bed, sofa, rug, or other similar surface. This product should never be placed near or over a radiator or heater. This product should not be placed in a built-in installation unless proper ventilation is provided.

15 This product should be connected to an AC power source within the range indicated on the rating label. DO NOT connect it to a DC power source or inverter. If you are not sure, contact a qualified electrician.

16 This product is equipped with a 3-wire earthed plug. This plug will fit into only an earthed socket. This is a safety feature. If you are unable to insert the plug into the outlet, contact your electrician to replace your obsolete socket. DO NOT defeat the purpose of an earthed plug.

17 Use the product in a well-ventilated area.

18 DO NOT place anything on top of the power cord including this machine. DO NOT allow the power cord to be stepped on.

19 DO NOT place anything in front of the machine that will block received faxes. DO NOT place anything in the path of received faxes.

20 DO NOT touch a document during printing.

21 Never push objects of any kind into this product through cabinet slots, since they may touch dangerous voltage points or short out parts resulting in a risk of fire or electric shock. Never spill liquid of any kind on the product.

22 DO NOT attempt to service this product yourself, because opening or removing covers may expose you to dangerous voltage points and/or other risks. Refer all servicing to service personnel.

23 Unplug this product from the mains power and telephone line sockets, and refer servicing to qualified Service Personnel under the following conditions:

- If the power cord is damaged or frayed.
- If liquid has been spilled into the product.
- If the product has been exposed to rain or water.
- If the product does not operate normally when the operating instructions are followed. Adjust only those controls that are covered by the operating instructions. Incorrect adjustment of other controls may result in damage and will often require extensive work by a qualified technician to restore the product to normal operation.
- If the product has been dropped or the casing has been damaged.
- If the product exhibits a distinct change in performance, indicating a need for service.

24 This unit will only work in conjunction with a tone signalling (DTMF) telephone, but some telephones are not compatible. Since noise or speech from the telephone can upset dialling from this unit, errors may result if the devices are used together in other than quiet conditions.

25 Where it is necessary to dial prefix digits, such as a Caller Display override code (“0196 ” or “0197 ”), this unit will have to be used in conjunction with an associated tone signalling (DTMF) telephone.

26 Note that some telephones are not compatible with this unit and dialling errors may result if the two devices are used together in other than quiet conditions. The Telecom Faults Service is not to be called should such problems arise. In such cases, it is recommended that the prefix and wanted number are dialled manually.

27 This equipment may not provide for the effective hand-over of a call to another device connected to the same line.

28 This equipment is not capable, under all operating conditions, of correct operation at the higher speeds for which it is designed. Telecom will accept no responsibility should difficulties arise in such circumstances. This condition typically applies to 56 kbit/s modems and facsimile machines operating at >14.4 kbit/s.

29 When using the Caller Line Identification incorporated in this device, verify the integrity of the recorded digits prior to dialling.

30 Some parameters required for compliance with Telecom's Telepermit requirements are dependent on the equipment (PC) associated with this device. The associated equipment shall be set to operate within the following limits for compliance with Telecom's Specifications:

- There shall be no more than 10 call attempts to the same number within any 30 minute period for any single manual call initiation, and
- The equipment shall go on-hook for a period of not less than 30 seconds between the end of one attempt and the beginning of the next call attempt.
- Automatic calls to different numbers are spaced such that there is not less than 5 seconds between the end of one call attempt and the beginning of another.
- Equipment shall be set to ensure that calls are answered within 3 and 30 seconds of the receipt of ringing.

31 In the event of any problem with this device, it is to be disconnected, and a CPE item connected to one of its terminal ports may be connected directly in its place. The user should then arrange for the product to be repaired. Should the matter be reported to Telecom as a wiring fault and the fault is proven to be due to this product, a call out charge will be incurred by the customer.

32 The caller ID telephone numbers that are displayed and stored in this equipment include the caller's area code but not the toll access "0" prefix. When calling back it is necessary to add a "0" to the telephone number, or if the telephone number is a local number, omit the area code digit. If the toll services of a service provider other than Telecom are being used then a toll charge may be incurred if the "0" prefix toll access code and area code are used.

IMPORTANT NOTICE

Under power failure conditions, this telephone may not operate. Please ensure that a separate telephone, not dependent on local power, is available for emergency use in emergencies.

Important Information for Some Countries

Important Safety Instructions

1 Read all of these instructions.

2 Save them for later reference.

3 Follow all warnings and instructions marked on the product.

4 Unplug this product from the wall outlet before cleaning the outside of the machine and the scanner glass. DO NOT use liquid or aerosol cleaners. Use a damp cloth for cleaning.

5 DO NOT place this product near water.

6 DO NOT place this product on an unstable cart, stand, or table. The product may drop, causing serious damage to the product.

7 Slots and openings in the casing at the back or bottom are provided for ventilation; to ensure reliable operation of the product and to protect it from overheating, these openings must not be blocked or covered. The openings should never be blocked by placing the product on a bed, sofa, rug, or other similar surface. This product should never be placed near or on a radiator or heater. This product should never be placed in a built-in installation unless adequate ventilation is provided.

8 This product should be connected to an AC power source within the range indicated on the rating label. DO NOT connect it to a DC power source or inverter. If you are not sure, contact a qualified electrician.

9 This product is equipped with a 2-wire grounding type plug or a 3-wire grounding type plug (Only for Singapore, Malaysia, Hong Kong and India), a plug having two or three pins. This plug will only fit into only a grounding-type power outlet. This is a safety feature. If you are unable to insert the plug into the outlet, contact your electrician to replace your obsolete outlet. DO NOT defeat the purpose of the grounding-type plug.

10 Use the product in a well-ventilated area.

11 DO NOT place anything on top of the power cord including this machine. DO NOT allow the power cord to be stepped on.

12 If an extension cord is used with this product, make sure that the total ampere ratings on the products plugged into the extension cord DO NOT exceed the extension cord ampere rating.

13 DO NOT place anything in front of the machine that will block received faxes. DO NOT place nything in the path of received faxes.

14 DO NOT touch a document during printing.

15 Never push objects of any kind into this product through cabinet slots, since they may touch dangerous voltage points or short out parts resulting in the risk of fire or electric shock. Never spill liquid of any kind on the product.

16 DO NOT attempt to service this product yourself, as opening or removing covers may expose you to dangerous voltage points and/or other risks, and may void your warranty. Please refer all servicing to our Authorized Service Personnel. A list of Authorized Service Centres has been included for your convenience, or you may contact the Brother Dealer for Service.

17 Unplug this product from the wall outlet and refer servicing to Authorized Service Personnel under the following conditions:

- If the power cord is damaged or frayed.
- If the product has been spilled by liquid.
- If the product has been exposed to rain or water.
- If the product does not operate normally when the operating instructions are followed. Adjust only those controls that are covered by the operating instructions. Incorrect adjustment of other controls may result in damage and will often require extensive work by a qualified technician to restore the product to normal operation.
- If the product has been dropped or the casing has been damaged.
- If the product exhibits a distinct change in performance, indicating a need for service.

18 To protect your product against power surges, we recommend the use of a power protection device (Surge Protector).

⚠ WARNING

For protection against the risk of electrical shock, always disconnect all cables from the wall outlet before servicing, modifying or installing the equipment.

This equipment may not be used on coin service lines provided by the telephone company or connected to party lines.

Brother cannot accept any financial or other responsibilities that may be the result of your use of this information, including direct, special or consequential damages. There are no warranties extended or granted by this document.

Libtiff Copyright and License

Use and Copyright

Copyright© 1988-1997 Sam Leffler

Copyright© 1991-1997 Silicon Graphics, Inc.

Permission to use, copy, modify, distribute, and sell this software and its documentation for any purpose is hereby granted without fee, provided that (i) the above copyright notices and this permission notice appear in all copies of the software and related documentation, and (ii) the names of Sam Leffler and Silicon Graphics may not be used in any advertising or publicity relating to the software without the specific, prior written permission of Sam Leffler and Silicon Graphics.

THE SOFTWARE IS PROVIDED "AS-IS" AND WITHOUT WARRANTY OF ANY KIND, EXPRESS, IMPLIED OR OTHERWISE, INCLUDING WITHOUT LIMITATION, ANY WARRANTY OF MERCHANTABILITY OR FITNESS FOR A PARTICULAR PURPOSE.

IN NO EVENT SHALL SAM LEFFLER OR SILICON GRAPHICS BE LIABLE FOR ANY SPECIAL, INCIDENTAL, INDIRECT OR CONSEQUENTIAL DAMAGES OF ANY KIND, OR ANY DAMAGES WHATSOEVER RESULTING FROM LOSS OF USE, DATA OR PROFITS, WHETHER OR NOT ADVISED OF THE POSSIBILITY OF DAMAGE, AND ON ANY THEORY OF LIABILITY, ARISING OUT OF OR IN CONNECTION WITH THE USE OR PERFORMANCE OF THIS SOFTWARE.

Legal limitations for copying

It is an offence to make reproductions of certain items or documents with the intent to commit fraud. This memorandum is intended to be a guide rather than a complete list. We suggest you check with relevant legal authorities if in doubt about a particular item or document.

The following are examples of documents which should not be copied:

- Money
- Bonds or other certificates of debt
- Certificates of Deposit
- Armed Forces Service or Draft papers
- Passports
- Postage Stamps (cancelled or uncancelled)
- Immigration Papers
- Welfare documents
- Cheques or Drafts drawn by Governmental Agencies
- Identification Documents, badges or insignias
- Licences and Certificates of Title to motor vehicles

Copyrighted works cannot be copied. Sections of a copyrighted work can be copied for ‘fair dealing’. Multiple copies would indicate improper use.

Works of art should be considered the equivalent of copyrighted works.

Trademarks

The Brother logo is a registered trademark of Brother Industries, Ltd.

Brother is a registered trademark of Brother Industries, Ltd.

Multi-Function Link is a registered trademark of Brother International Corporation.

Adobe, Flash, Illustrator, PageMaker, Photoshop, PostScript and PostScript 3 are either registered trademarks or trademarks of Adobe Systems Incorporated in the United States and/or other countries.

Microsoft, Windows, Windows Server and Internet Explorer are registered trademarks of Microsoft Corporation in the United States and/or other countries.

Windows Vista is either a registered trademark or a trademark of Microsoft Corporation in the United States and other countries.

Apple, Macintosh, Safari and TrueType are trademarks of Apple Inc., registered in the United States and other countries.

Intel, and Pentium are trademarks of Intel Corporation in the U.S. and other countries.

AMD is a trademark of Advanced Micro Devices, Inc.

PowerPC is a registered trademark of IBM in the United States and/or other countries.

PictBridge is a trademark.

Epson is a registered trademark and FX-80 and FX-850 are trademarks of Seiko Epson Corporation.

IBM and Proprinter are either registered trademarks or trademarks of International Business Machines Corporation in the United States and/or other countries.

BROADCOM, SecureEasySetup and the SecureEasySetup logo are trademarks or registered trademarks of Broadcom Corporation in the United States and/or other countries.

Wi-Fi, WPA, WPA2, Wi-Fi Protected Access and Wi-Fi Protected Setup are either trademarks or registered trademarks of Wi-Fi Alliance in the United States and/or other countries.

AOSS is a trademark of Buffalo Inc.

Nuance, the Nuance logo, PaperPort and ScanSoft are trademarks or registered trademarks of Nuance Communications, Inc. or its affiliates in the United States and/or other countries.

All other trademarks are the property of their respective owners.

B Options

Memory board

This machine has 64 MB of standard memory and one slot for optional memory expansion. You can expand the memory up to 576 MB by installing dual in-line memory modules (SO-DIMMs). When you add the optional memory, it increases the performance for both copier and printer operations.

In general, the machine uses industry-standard SO-DIMM with the following specifications:

Type: 144 pin and 64 bit output

CAS latency: 2

Clock frequency: 100 MHz or more

Capacity: 64, 128, 256 or 512 MB

Height: 31.75 mm

Dram Type: SDRAM 2 Bank

You can find more information about memory modules on this website:

http://www.buffalo-technology.com/

Note

- There might be some SO-DIMMs that will not work with the machine.
- For more information, contact your Brother dealer.

Installing extra memory

1. Turn off the machine's power switch. Unplug the telephone line cord.
2. Disconnect the interface cable from the machine, and then unplug the power cord from the electrical socket.

Note

Be sure to turn off the machine's power switch before you install or remove the SO-DIMM.

3. Remove the plastic (1) and then metal (2) SO-DIMM covers.

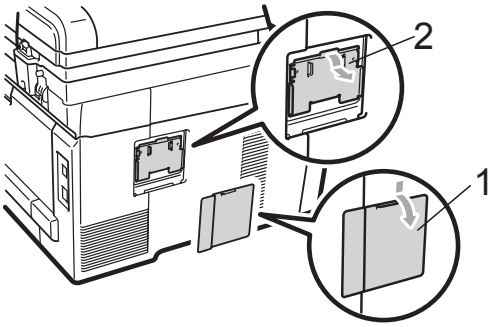

4. Unpack the SO-DIMM and hold it by its edges.

IMPORTANT

To prevent damage to the machine from static electricity, DO NOT touch the memory chips or the board surface.

5 Hold the SO-DIMM by the edges and align the notches in the SO-DIMM with the protrusions in the slot. Insert the SO-DIMM diagonally (1), then tilt it toward the interface board until it clicks into place (2).

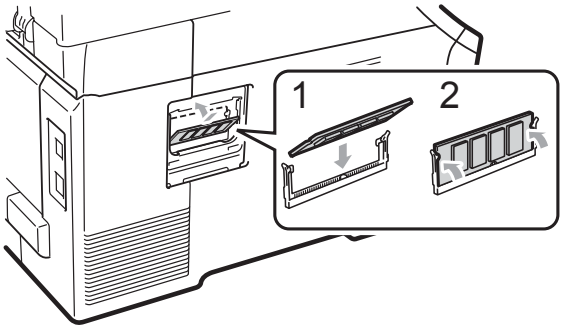

6 Put the metal (2) and then the plastic (1) SO-DIMM covers back on.

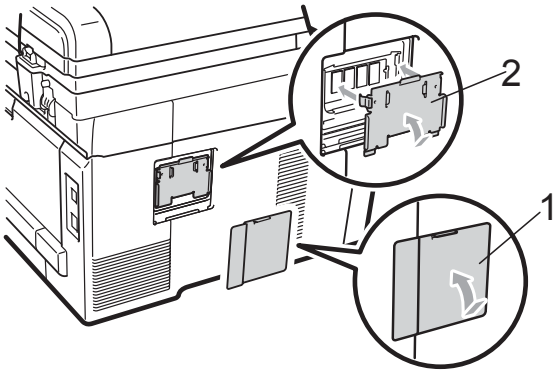

7 Plug the machine's power cord back into the electrical socket first, and then connect the interface cable.

8 Plug in the telephone line cord. Turn on the machine's power switch.

Note

To make sure that you have installed the SO-DIMM correctly, you can print the user settings page that shows the current memory size. (See *How to print a report* on page 84.)

C Troubleshooting and routine maintenance

Troubleshooting

If you think there is a problem with your machine, check the chart below and follow the troubleshooting tips.

Most problems can be easily resolved by yourself. If you need additional help, the Brother Solutions Center offers the latest FAQs and troubleshooting tips.
Visit us at http://solutions.brother.com/.

If you are having difficulty with your machine

If you think there is a problem with the way your faxes look, make a copy first. If the copy looks good, the problem may not be your machine. Check the chart below and follow the troubleshooting tips.

Printing or printing received faxes

Difficulties	Suggestions
■ Condensed print ■ Horizontal streaks ■ Top and bottom sentences are cut off ■ Missing lines	Usually this is caused by a poor telephone connection. If your copy looks good, you probably had a bad connection, with static or interference on the telephone line. Ask the other party to send the fax again.
Poor print quality	See *Improving the print quality* on page 134.
Vertical black lines when receiving	The corona wires for printing may be dirty. Clean the corona wires on the four drum units. (See *Cleaning the corona wires* on page 158.)
	The sender's scanner may be dirty. Ask the sender to make a copy to see if the problem is with the sending machine. Try receiving from another fax machine.
	If the problem continues, call your dealer for service.
Received faxes appear as split or blank pages.	If the received faxes are divided and printed on two pages or if you get an extra blank page, your paper size setting may not be correct for the paper you are using. (See *Paper Size* on page 24.)
	Turn on Auto Reduction. (See *Printing a reduced incoming fax* on page 50.)

Telephone line or connections

Difficulties	Suggestions
Dialling does not work.	Check for a dial tone.
	(Not available in New Zealand) Change `Tone/Pulse` setting. (See the *Quick Setup Guide*.)
	Check all line cord connections.
	Check that the machine is plugged in and switched on.
	If an external phone is connected to the machine, send a manual fax by lifting the handset of the external telephone and dialling the number. Wait to hear the fax receiving tones before pressing **Mono Start** or **Colour Start**.
The machine does not answer when called.	Make sure the machine is in the correct receive mode for your setup. (See *Receive Mode settings* on page 48.) Check for a dial tone. If possible, call your machine to hear it answer. If there is still no answer, check the telephone line cord connection. If you do not hear ringing when you call your machine, ask your telephone company to check the line.

Receiving Faxes

Difficulties	Suggestions
Cannot receive a fax.	Check all line cord connections. Make sure the telephone line cord is plugged into the telephone wall socket and the LINE socket of the machine. If you subscribe to DSL or VoIP services, please contact your service provider for connection instructions.
	Make sure the machine is in the correct Receive Mode. This is determined by the external devices and telephone subscriber services you have on the same line as the Brother machine. (See *Receive Mode settings* on page 48.) If you have a dedicated fax line and want your Brother machine to automatically answer all incoming faxes, you should select `Fax Only` mode. If your Brother machine shares a line with an external answering machine, you should select the `External TAD` mode. In `External TAD` mode, your Brother machine will automatically receive incoming faxes and voice callers will be able to leave a message on your answering machine. If your Brother machine shares a line with other telephones and you want it to automatically answer all incoming faxes, you should select the `Fax/Tel` mode. In `Fax/Tel` mode, your Brother machine will automatically receive faxes and produce a fast double-ring to alert you to answer voice calls. If you do not want your Brother machine to automatically answer any incoming faxes, you should select the `Manual` mode. In `Manual` mode, you must answer every incoming call and activate the machine to receive faxes.

Receiving Faxes (continued)

Difficulties	Suggestions
Cannot receive a fax. (continued)	Another device or service at your location may be answering the call before your Brother machine answers. To test this, lower the ring delay setting: ■ If the answer mode is set to `Fax Only` or `Fax/Tel`, reduce the ring delay to 1 ring. (See *Ring Delay* on page 48.) ■ If the answer mode is set to `External TAD`, reduce the number of rings programmed on your answering machine to 2. ■ If the answer mode is set to `Manual`, DO NOT adjust the ring delay setting. Have someone send you a test fax: ■ If you received the test fax successfully, your machine is operating properly. Remember to reset your ring delay or answering machine setting back to your original setting. If receiving problems recur after resetting the ring delay, then a person, device, or subscriber service is answering the fax call before the machine has a chance to answer. ■ If you were not able to receive the fax, then another device or subscriber service may be interfering with your fax reception or there may be a problem with your fax line.
	If you are using a telephone answering machine (`External TAD` mode) on the same line as the Brother machine, make sure your answering machine is set up correctly. (See *Connecting an external TAD* on page 58.) 1 Connect the external TAD as shown in the illustration on page 59. 2 Set your answering machine to answer in one or two rings. 3 Record the outgoing message on your answering machine. ■ Record five seconds of silence at the beginning of your outgoing message. ■ Limit your speaking to 20 seconds. ■ End your outgoing message with your Remote Activation Code for people sending manual faxes. For example: "After the beep, leave a message or press ∗**51** and Start to send a fax." 4 Set your answering machine to answer calls. 5 Set your Brother machine's Receive Mode to `External TAD`. (See *Receive Mode settings* on page 48.)
	Make sure your Brother machine's Fax Detect feature is turned On. Fax Detect is a feature that allows you to receive a fax even if you have answered the call on an external or extension telephone. (See *Fax Detect* on page 49.)
	If you often get transmission errors due to possible interference on the telephone line, try changing the Compatibility setting to `Basic(for VoIP)`. (See *Telephone line interference* on page 141.)
	(For MFC-9320CW only) Contact your administrator to check your Secure Function Lock Settings.

C

Sending faxes

Difficulties	Suggestions
Poor sending quality.	Try changing your resolution to `Fine` or `S.Fine`. Make a copy to check your machine's scanner operation. If the copy quality is not good, clean the scanner. (See *Cleaning the scanner glass* on page 156.)
Transmission Verification Report says `RESULT:ERROR`.	There is probably temporary noise or static on the line. Try sending the fax again. If you are sending a PC Fax message and get `RESULT:ERROR` on the Transmission Verification Report, your machine may be out of memory. To free up extra memory, you can turn off fax storage (see *Turning off Remote Fax Options* on page 75), print fax messages in memory (see *Printing a fax from the memory* on page 51) or cancel a delayed fax or polling job (see *Checking and cancelling waiting jobs* on page 45). If the problem continues, ask the telephone company to check your telephone line.
	If you often get transmission errors due to possible interference on the telephone line, try changing the Compatibility setting to `Basic(for VoIP)`. (See *Telephone line interference* on page 141.)
Sent faxes are blank.	Make sure you are loading the document properly. (See *Loading documents* on page 22)
Vertical black lines when sending.	Black vertical lines on faxes you send are typically caused by dirt or correction fluid on the glass strip. (See *Cleaning the scanner glass* on page 156.)
Cannot send a fax.	(For MFC-9320CW only) Contact your administrator to check your Secure Function Lock Settings.

Handling incoming calls

Difficulties	Suggestions
The machine 'Hears' a voice as a CNG Tone.	If Fax Detect is set to On, your machine is more sensitive to sounds. It may mistakenly interpret certain voices or music on the line as a fax machine calling and respond with fax receiving tones. Deactivate the machine by pressing **Stop/Exit**. Try avoiding this problem by turning Fax Detect to Off. (See *Fax Detect* on page 49.)
Sending a Fax Call to the machine.	If you answered on an external or extension telephone, press your Remote Activation code (default setting is ∗51 (∗91 for New Zealand)). When your machine answers, hang up.
Custom features on a single line.	If you have Call Waiting, Call Waiting/Caller ID, Caller ID, Voice Mail, an answering machine, an alarm system or other custom feature on a single telephone line with your machine, it may create a problem sending or receiving faxes. **For Example:** If you subscribe to Call Waiting or some other custom service and its signal comes through the line while your machine is sending or receiving a fax, the signal can temporarily interrupt or disrupt the faxes. Brother's ECM feature should help overcome this problem. This condition is related to the telephone system industry and is common to all devices that send and receive information on a single, shared line with custom features. If avoiding a slight interruption is crucial to your business, a separate line with no custom features is recommended.

Menu access difficulties

Difficulties	Suggestions
The machine beeps when you try to access the Setup Receive and Setup Send menus.	If **Fax** is not illuminated, press it to turn on Fax mode. The Setup Receive setting (**Menu**, **2**, **1**) and Setup Send setting (**Menu**, **2**, **2**) are available only when the machine is in Fax mode.

Copy difficulties

Difficulties	Suggestions
Cannot make a copy.	■ Make sure that **Copy** is illuminated. (See *Entering copy mode* on page 86.) ■ (For MFC-9320CW only) Contact your administrator to check your Secure Function Lock Settings.
Vertical black line appears in copies.	Black vertical lines on copies are typically caused by dirt or correction fluid on the glass strip, or one or more corona wires are dirty. (See *Cleaning the scanner glass* on page 156 and *Cleaning the corona wires* on page 158.)
Copies are blank.	Make sure you are loading the document correctly. (See *Using the automatic document feeder (ADF)* on page 22 or *Using the scanner glass (Flatbed)* on page 23.)

Printing difficulties

Difficulties	Suggestions
No printout.	■ Check that the machine is plugged in and the power switch is turned on. ■ Check that the toner cartridge and drum unit are installed correctly. (See *Replacing the drum units* on page 174.) ■ Check the interface cable connection on both the machine and your computer. (See the *Quick Setup Guide*.) ■ Check that the correct printer driver has been installed and chosen. ■ Check to see if the LCD is showing an error message. (See *Error and maintenance messages* on page 142.) ■ Check the machine is online: (Windows Vista®) Click the **Start** button, **Control Panel**, **Hardware and Sound**, and then **Printers**. Right-click **Brother MFC-XXXX Printer**. Make sure that **Use Printer Offline** is unchecked. (Windows® XP and Windows Server® 2003) Click the **Start** button and choose **Printers and Faxes**. Right-click **Brother MFC-XXXX Printer**. Make sure that **Use Printer Offline** is unchecked. (Windows® 2000) Click the **Start** button and choose **Settings** and then **Printers**. Right-click **Brother MFC-XXXX Printer**. Make sure that **Use Printer Offline** is unchecked. ■ (For MFC-9320CW only) Contact your administrator to check your Secure Function Lock settings.
The machine prints unexpectedly or it prints garbage.	■ Pull out the paper tray and wait until the machine stops printing. Then turn off the machine and disconnect from the power for several minutes. (The machine can be turned off for up to 60 hours without losing faxes stored in the memory.) ■ Check the settings in your application to make sure it is set up to work with your machine.

Printing difficulties (continued)

Difficulties	Suggestions
The machine prints the first couple of pages correctly, then some pages have text missing.	■ Check the settings in your application to make sure that it is set up to work with your machine. ■ Your computer is not recognising the machine's input buffer's full signal. Make sure that you connected the interface cable correctly. (See the *Quick Setup Guide*.)
The headers or footers appear when the document displays on the screen but they do not show up when it is printed.	There is an unprintable area on the top and bottom of the page. Adjust the top and bottom margins in your document to allow for this. (See *Unprintable area* on page 16.)
The machine is not printing or has stopped printing.	Press **Job Cancel**. As the machine cancels the job and clears it from the memory it may produce an incomplete printout.

Scanning difficulties

Difficulties	Suggestions
TWAIN errors appear while scanning.	Make sure that the Brother TWAIN driver is chosen as the primary source. In PaperPort™ 11SE, click **File**, **Scan or Get Photo** and choose the Brother TWAIN driver.
OCR does not work.	Try increasing the scanning resolution.
Network scanning does not work.	See *Network difficulties* on page 131.
Cannot scan.	(For MFC-9320CW only) Contact your administrator to check your Secure Function Lock Settings.

Software difficulties

Difficulties	Suggestions
Cannot install software or print.	Run the **Repair MFL-Pro Suite** program on the CD-ROM. This program will repair and reinstall the software.
Cannot perform '2 in 1' or '4 in 1' printing.	Check that the paper size setting in the application and in the printer driver are the same.
The machine does not print from Adobe® Illustrator®.	Try to reduce the print resolution. (See *Advanced tab* in the *Software User's Guide* on the CD-ROM.)

Paper handling difficulties

Difficulties	Suggestions
The machine does not load paper. The LCD shows `No Paper` or a Paper Jam message.	■ If there is no paper, load a new stack of paper into the paper tray. ■ If there is paper in the paper tray, make sure it is straight. If the paper is curled, you should straighten it. Sometimes it is helpful to remove the paper, turn the stack over and put it back into the paper tray. ■ Reduce the amount of paper in the paper tray, and then try again. ■ Make sure that manual feed mode is not chosen in the printer driver. ■ Clean the paper pick-up roller. See *Cleaning the paper pick-up rollers* on page 164. ■ If the LCD shows the Paper Jam message and you still have a problem, see *Paper jams* on page 150.

Paper handling difficulties (continued)

Difficulties	Suggestions
The machine does not feed paper from the manual feed slot.	■ Make sure that **Manual** is chosen in the printer driver. ■ Make sure the paper or print media is loaded correctly in the manual feed slot. See *Loading paper in the manual feed slot* on page 12.
How do I print on envelopes?	You can load envelopes from the manual feed slot. Your application must be set up to print the envelope size you are using. This is usually done in the Page Setup or Document Setup menu of your application. (See your application's manual for more information.)
What paper can I use?	You can use thin paper, plain paper, thick paper, bond paper, recycled paper, envelopes and labels that are made for laser machines. (For details, see *Acceptable paper and other print media* on page 17.)
There is a paper jam.	Clear the jammed paper. (See *Paper jams* on page 150.)

Print quality difficulties

Difficulties	Suggestions
Printed pages are curled.	■ Low quality thin or thick paper or not printing on the recommended side of the paper could cause this problem. Try turning over the stack of paper in the paper tray. ■ Make sure that you choose the Paper Type that suits the print media type you are using. (See *Acceptable paper and other print media* on page 17.)
Printed pages are smeared.	The Paper Type setting may be incorrect for the type of print media you are using, or the print media may be too thick or have a rough surface. (See *Acceptable paper and other print media* on page 17 and *Basic tab* in the *Software User's Guide* on the CD-ROM.)
Printouts are too light.	■ If this problem occurs when making copies or printing received faxes, set Toner Save mode to `Off` in the machine menu settings. (See *Toner Save* on page 26.) ■ Set Toner Save mode to `Off` in the Advanced tab in the printer driver. (See *Advanced tab* in the *Software User's Guide* on the CD-ROM.) ■ In the **Basic** tab of the printer driver, click the **Settings** button and check the **Enhance Black Printing** check box.

Network difficulties

Difficulties	Suggestions
Cannot print over a wired Network.	If you are having Network problems see the *Network User's Guide* on the CD-ROM for more information. Make sure your machine is powered on and is on-line and in the Ready mode. Print the Network Configuration list to see your current Network settings. (See *How to print a report* on page 84.) Reconnect the LAN cable to the hub to verify that the cable and network connections are good. If possible, try connecting the machine to a different port on your hub using a different cable. If the connections are good, the lower LED of the back panel of the machine will be green.

Network difficulties (continued)

Difficulties	Suggestions
The network scanning feature does not work. The network PC Fax Receive feature does not work. The network printing feature does not work.	(Windows®) The firewall setting on your PC may be rejecting the necessary network connection. Follow the instructions below to configure Windows® Firewall. If you are using other personal firewall software, see the User's Guide for your software or contact the software manufacturer. **(Windows® XP SP2)** 1 Click the **Start** button, **Control Panel**, **Network and Internet Connections** and then **Windows Firewall**. Make sure that **Windows Firewall** on the **General** tab is set to On. 2 Click the **Advanced** tab and **Settings...** 3 Click the **Add** button. 4 To add port 54925 for network scanning, enter the information below: 1. In **Description of service**: Enter any description, for example "Brother Scanner". 2. In **Name or IP address (for example 192.168.0.12) of the computer hosting this service on your network:** Enter "Localhost". 3. In **External Port number for this service:** Enter "54925". 4. In **Internal Port number for this service:** Enter "54925". 5. Make sure **UDP** is chosen. 6. Click **OK**. 5 Click the **Add** button. 6 To add port 54926 for network PC Fax, enter the information below: 1. In **Description of service:** Enter any description, for example "Brother PC Fax". 2. In **Name or IP address (for example 192.168.0.12) of the computer hosting this service on your network:** Enter "Localhost". 3. In **External Port number for this service:** Enter "54926". 4. In **Internal Port number for this service:** Enter "54926". 5. Make sure **UDP** is chosen. 6. Click **OK**. 7 If you still have trouble with your network connection, click the **Add** button. 8 To add port 137 for network scanning, network printing and network PC Fax receiving, enter the information below: 1. In **Description of service:** Enter any description, for example "Brother PC Fax receiving". 2. In **Name or IP address (for example 192.168.0.12) of the computer hosting this service on your network:** Enter "Localhost". 3. In **External Port number for this service:** Enter "137". 4. In **Internal Port number for this service:** Enter "137". 5. Make sure **UDP** is chosen. 6. Click **OK**. 9 Make sure that the new setting is added and is checked, and then click **OK**.

Network difficulties (continued)

Difficulties	Suggestions
The network scanning feature does not work. The network PC Fax Receive feature does not work. The network printing feature does not work. (continued)	**(Windows Vista®)** 1 Click the **Start** button, **Control Panel**, **Network and Internet**, **Windows Firewall** and click **Change settings**. 2 When the **User Account Control** screen appears, do the following. ■ Users who have administrator rights: Click **Continue**. ■ For users who do not have administrator rights: Enter the administrator password and click **OK**. 3 Make sure that **Windows Firewall** on the **General** tab is set to On. 4 Click the **Exceptions** tab. 5 Click the **Add port...** button. 6 To add port 54925 for network scanning, enter the information below: 1. In **Name:** Enter any description. (for example “Brother Scanner”) 2. In **Port number:** Enter “54925”. 3. Make sure **UDP** is chosen. Then click **OK**. 7 Click the **Add port...** button. 8 To add port 54926 for Network PC Fax, enter the information below: 1. In **Name:** Enter any description. (for example “Brother PC Fax”) 2. In **Port number:** Enter “54926”. 3. Make sure **UDP** is chosen. Then click **OK**. 9 Make sure that the new setting is added and is checked, and then click **OK**. 10 If you still have trouble with your network connection such as network scanning or printing, check **File and Printer Sharing** box in the **Exceptions** tab and then click **OK**.
Your computer cannot find your machine.	**(Windows®)** The firewall setting on your PC may be rejecting the necessary network connection. (For details, see the instructions above.) **(Macintosh)** Re-select your machine in the Device Selector application located in **Macintosh HD/Library/Printers/Brother/Utilities/DeviceSelector** or from the Model pop-up menu of ControlCenter2.

Other

Difficulties	Suggestions
The machine will not turn on.	Adverse conditions on the power connection (such as lightning or a power surge) may have triggered the machine’s internal safety mechanisms. Turn the machine off and unplug the power cord. Wait for ten minutes, then plug in the power cord and turn the machine on. If the problem is not solved, turn off the machine. Plug the power cord into a different known working outlet and turn on the machine.

Improving the print quality

If you have a print quality problem, print a test page first (**Menu**, **4**, **2**, **3**). If the printout looks good, the problem is probably not the machine. Check the interface cable connections or try printing a different document. If the printout or test page printed from the machine has a quality problem, check the following steps first. And then, if you still have a print quality problem, check the chart below and follow the recommendation.

1. Check that you use the paper that meets our specifications. (See *Acceptable paper and other print media* on page 17.)

Note

To get the best print quality, we suggest using the recommended paper. (See *Acceptable paper and other print media* on page 17.)

2. Check that the drum units and toner cartridges are installed correctly.

Examples of poor print quality	Recommendation
White lines, bands or ribbing across the page	■ Put in a new drum unit. (See *Replacing the drum units* on page 174.) You may only need to replace one drum unit to solve the print problem. To identify which drum needs to be replaced, please visit us at http://solutions.brother.com/ to view our FAQs and troubleshooting tips.
Colours are light or unclear on the whole page 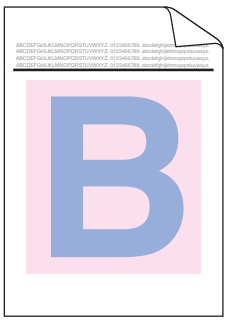	■ Make sure Toner Save mode is off in the control panel of the machine or the printer driver. ■ Make sure that you choose the proper media type in the printer driver or in the machine's Paper Type menu setting. (See *Acceptable paper and other print media* on page 17 and *Basic tab* in the *Software User's Guide* on the CD-ROM.) ■ Shake all four toner cartridges gently. ■ Wipe the windows of all four LED heads with a dry lint free soft cloth. (See *Cleaning the LED heads* on page 157.)

Examples of poor print quality	Recommendation
White streaks or bands down the page 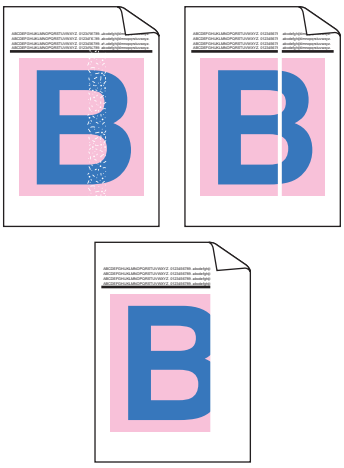	■ Wipe the windows of all four LED heads with a dry lint free soft cloth. (See *Cleaning the LED heads* on page 157.) ■ Clean all four drum units. (See *Cleaning the drum unit* on page 159.) ■ Identify the missing colour and put in a new toner cartridge. (See *Replacing a Toner cartridge* on page 168.) You may only need to replace one toner cartridge to solve the print problem. To identify which toner cartridge needs to be replaced, please visit us at http://solutions.brother.com/ to view our FAQs and troubleshooting tips.
Coloured streaks or bands down the page 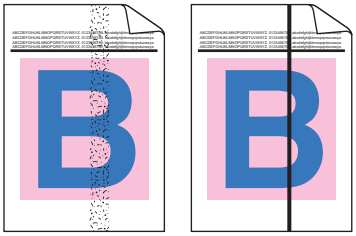	■ Clean all four corona wires (one for each colour) inside the drum unit by sliding the green tab. (See *Cleaning the corona wires* on page 158.) ■ Make sure the corona wire cleaners are at their home positions (▲). ■ Clean the scanner glass and scanner glass strip. (See *Cleaning the scanner glass* on page 156.) ■ Replace the toner cartridge that matches the colour of the streak or band. (See *Replacing a Toner cartridge* on page 168.) You may only need to replace one toner cartridge to solve the print problem. To identify which toner cartridge needs to be replaced, please visit us at http://solutions.brother.com/ to view our FAQs and troubleshooting tips. ■ Put in a new drum unit. (See *Replacing the drum units* on page 174.) You may only need to replace one drum unit to solve the print problem. To identify which drum needs to be replaced, please visit us at http://solutions.brother.com/ to view our FAQs and troubleshooting tips.
Vertical streaks in a light background	■ Wipe the windows of all four LED heads with a dry lint free soft cloth. (See *Cleaning the LED heads* on page 157.)

C

Examples of poor print quality	Recommendation
Coloured lines across the page 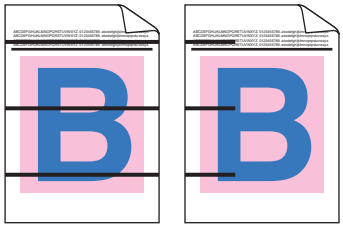	■ If coloured lines appear at 30 mm intervals, replace the toner cartridge that matches the colour of the line. (See *Replacing a Toner cartridge* on page 168.) ■ If coloured lines appear at 94 mm intervals, put in a new drum unit that matches the colour of the line. (See *Replacing the drum units* on page 174.)
White spots or hollow print	■ If the problem is not solved after printing a few pages, the drum unit may be stained. Clean all four drum units. (See *Small spots on the printed pages* in *Cleaning the drum unit* on page 159.) ■ Make sure that the media type settings in the printer driver and in the machine's Paper Type menu matches the type of paper you are using. (See *Acceptable paper and other print media* on page 17 and *Basic tab* in the *Software User's Guide* on the CD-ROM.) ■ Check the machine's environment. Conditions such as high humidity can cause white spots or hollow print. (See *Choosing a location* on page 108.)
Completely blank or some colours are missing 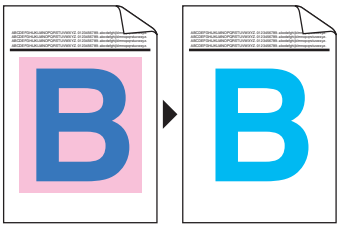	■ Put in a new toner cartridge. (See *Replacing a Toner cartridge* on page 168.) You may only need to replace one toner cartridge to solve the print problem. To identify which toner cartridge needs to be replaced, please visit us at http://solutions.brother.com/ to view our FAQs and troubleshooting tips. ■ Put in a new drum unit. (See *Replacing the drum units* on page 174.) You may only need to replace one drum unit to solve the print problem. To identify which drum needs to be replaced, please visit us at http://solutions.brother.com/ to view our FAQs and troubleshooting tips.
Coloured spots at 94 mm 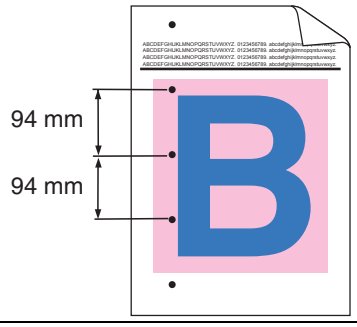	■ If the problem is not solved after printing a few pages, the drum unit may have glue from a label stuck on the drum surface. Clean the drum unit. (See *Large spots on the printed pages* in *Cleaning the drum unit* on page 159.) ■ Put in a new drum unit. (See *Replacing the drum units* on page 174.) You may only need to replace one drum unit to solve the print problem. To identify which drum needs to be replaced, please visit us at http://solutions.brother.com/ to view our FAQs and troubleshooting tips.
Coloured spots at 30 mm 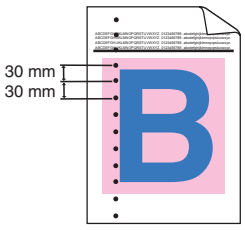	■ Identify the colour causing the problem and put in a new toner cartridge. (See *Replacing a Toner cartridge* on page 168.) You may only need to replace one toner cartridge to solve the print problem. To identify which toner cartridge needs to be replaced, please visit us at http://solutions.brother.com/ to view our FAQs and troubleshooting tips.

Examples of poor print quality	Recommendation
Toner scatter or toner stain 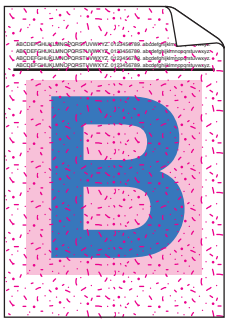	■ Check the machine's environment. Conditions such as high humidity and high temperatures may cause this print quality problem. (See *To use the machine safely* on page 109.) ■ Identify the colour causing the problem and put in a new toner cartridge. (See *Replacing a Toner cartridge* on page 168.) You may only need to replace one toner cartridge to solve the print problem. To identify which toner cartridge needs to be replaced, please visit us at http://solutions.brother.com/ to view our FAQs and troubleshooting tips. ■ If the problem continues, put in a new drum unit. (See *Replacing the drum units* on page 174.) You may only need to replace one drum unit to solve the print problem. To identify which drum needs to be replaced, please visit us at http://solutions.brother.com/ to view our FAQs and troubleshooting tips.
The colour of your printouts is not what you expected	■ Make sure Toner Save mode is off in the control panel of the machine or the printer driver. ■ Perform the calibration. (See *Calibration* on page 164.) ■ Adjust the colour by using the custom setting in the driver and by using the control panel of the machine. Colours the machine can print and colours you see on a monitor are different. The machine may not be able to reproduce the colours on your monitor. ■ If colours appear in the printed grey areas, make sure there is a check in the **Improve Grey Colour** check box of the printer driver. (See *Basic tab* for Windows® printer driver, *Advanced tab* for Macintosh printer driver or *Printer Features* for Macintosh BR-Script printer driver in the *Software User's Guide* on the CD-ROM.) ■ If shaded areas look dull, remove the check from the **Improve Grey Colour** check box. ■ If a printed black graphic is too light, choose **Enhance Black Printing** mode in the printer driver. (See *Settings Dialog* for Windows® printer driver, *Advanced options* for Windows® BR-Script printer driver, *Print Settings* for Macintosh printer driver or *Printer Features* for Macintosh BR-Script printer driver in the *Software User's Guide* on the CD-ROM.) ■ Identify the colour causing the problem and put in a new toner cartridge. (See *Replacing a Toner cartridge* on page 168.) You may only need to replace one toner cartridge to solve the print problem. To identify which toner cartridge needs to be replaced, please visit us at http://solutions.brother.com/ to view our FAQs and troubleshooting tips. ■ Identify the colour causing the problem and put in a new drum unit. (See *Replacing the drum units* on page 174.) You may only need to replace one drum unit to solve the print problem. To identify which drum needs to be replaced, please visit us at http://solutions.brother.com/ to view our FAQs and troubleshooting tips.

Examples of poor print quality	Recommendation
All one colour 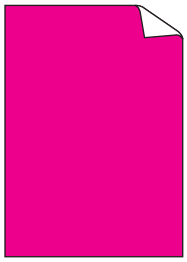	■ Identify the colour causing the problem and put in a new drum unit. (See *Replacing the drum units* on page 174.) You may only need to replace one drum unit to solve the print problem. To identify which drum needs to be replaced, please visit us at http://solutions.brother.com/ to view our FAQs and troubleshooting tips.
Colour misregistration 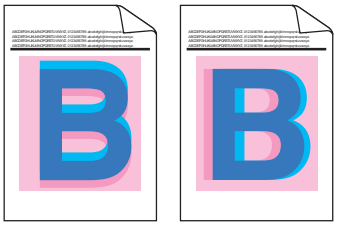	■ Make sure that the machine is on a solid level surface. ■ Perform the auto colour registration using the control panel (see *Auto Registration* on page 165) or perform the manual colour registration using the control panel (see *Manual Registration* on page 165). ■ Identify the colour causing the problem and put in a new drum unit. (See *Replacing the drum units* on page 174.) You may only need to replace one drum unit to solve the print problem. To identify which drum needs to be replaced, please visit us at http://solutions.brother.com/ to view our FAQs and troubleshooting tips. ■ Put in a new belt unit. (See *Replacing the belt unit* on page 177.)
Uneven density appears periodically across the page	■ Perform the calibration. (See *Calibration* on page 164.) ■ Adjust the contrast or brightness when you are in copy mode. (See *Adjusting Contrast, Colour and Brightness* on page 89.) ■ Identify the colour that is uneven and put in a new toner cartridge for that colour. (See *Replacing a Toner cartridge* on page 168.) You may only need to replace one toner cartridge to solve the print problem. To identify which toner cartridge needs to be replaced, please visit us at http://solutions.brother.com/ to view our FAQs and troubleshooting tips. ■ Identify the colour that is uneven and put in a new drum unit. (See *Replacing the drum units* on page 174.) You may only need to replace one drum unit to solve the print problem. To identify which drum needs to be replaced, please visit us at http://solutions.brother.com/ to view our FAQs and troubleshooting tips.
Thin lines do not print	■ Make sure Toner Save mode is off in the control panel of the machine or the printer driver. ■ Change the print resolution. ■ If you use Windows® printer driver, choose **Improve Pattern Printing** or **Improve Thin Line** in **Settings** of **Basic** tab. (See *Settings Dialog* in the *Software User's Guide* on the CD-ROM.)

Examples of poor print quality	Recommendation
Wrinkle 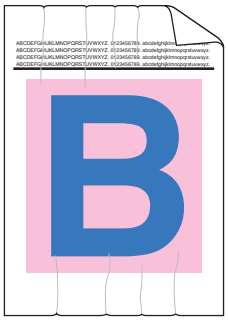	■ Change to the recommended type of paper. ■ Make sure that the back cover is closed correctly. ■ Make sure that two grey levers inside the back cover are in the up position. ■ Make sure that the media type settings in the printer driver and in the machine's Paper Type menu matches the type of paper you are using. (See *Acceptable paper and other print media* on page 17 and *Basic tab* in the *Software User's Guide* on the CD-ROM.)
Offset image	■ Make sure that the media type settings in the printer driver and in the machine's Paper Type menu matches the type of paper you are using. (See *Acceptable paper and other print media* on page 17 and *Basic tab* in the *Software User's Guide* on the CD-ROM.) ■ Make sure that two grey levers inside the back cover are in the up position. ■ Check the machine's environment. Conditions such as dry and low temperatures may cause this print quality problem. (See *Choosing a location* on page 108.) ■ Identify the colour causing the problem and put in a new drum unit. (See *Replacing the drum units* on page 174.) To identify the colour of the drum unit, visit us at http://solutions.brother.com/ to view our FAQs and troubleshooting tips.
Poor fixing 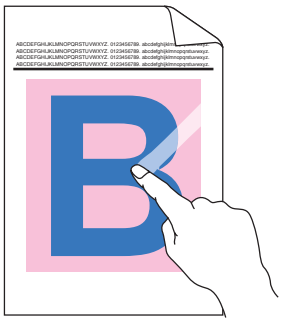	■ Make sure that the media type settings in the printer driver and in the machine's Paper Type menu matches the type of paper you are using. (See *Acceptable paper and other print media* on page 17 and *Basic tab* in the *Software User's Guide* on the CD-ROM.) ■ Make sure that two grey levers inside the back cover are in the up position. ■ Choose **Improve Toner Fixing** mode in the printer driver. (See *Other Print Options* (For Windows® printer driver), *Advanced options* (For Windows® BR-Script printer driver), *Print Settings* (For Macintosh printer driver) or *Printer Features* (For Macintosh BR-Script printer driver) in the *Software User's Guide* on the CD-ROM.) If this selection does not provide enough improvement, select **Thicker paper** in **Media Type** settings.

Examples of poor print quality	Recommendation
Curled or wavy 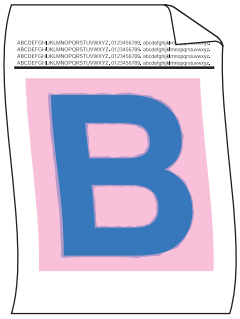	■ Choose **Reduce Paper Curl** mode in the printer driver when you do not use our recommended paper. (See *Other Print Options* (For Windows® printer driver), *Advanced options* (For Windows® BR-Script printer driver), *Print Settings* (For Macintosh printer driver) or *Printer Features* (For Macintosh BR-Script printer driver) in the *Software User's Guide* on the CD-ROM.) ■ If you do not use the machine often, the paper may have been in the paper tray too long. Turn over the stack of paper in the paper tray. Also, fan the paper stack and then rotate the paper 180° in the paper tray. ■ Store the paper where it will not be exposed to avoid high temperatures and high humidity.
Uneven density or faded 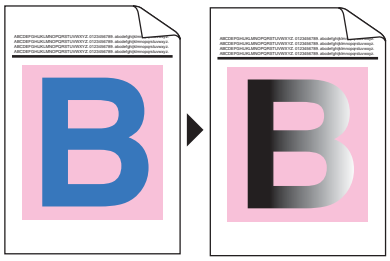	■ Fully open the top cover and then close it again.
Envelope creases 	Make sure that the envelope levers are pulled down when you are printing envelopes. 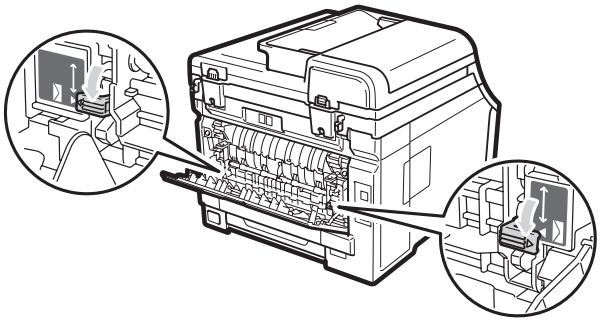

Setting Dial Tone detection

When you send a fax automatically, by default your machine will wait for a fixed amount of time before it starts to dial the number. By changing the Dial Tone setting to `Detection` you can make your machine dial as soon as it detects a dial tone. This setting can save a small amount of time when sending a fax to many different numbers. If you change the setting and start having problems with dialling you should change back to the default `No Detection` setting.

1. (for New Zealand) Press **Menu**, **0**, **4**.
   Press **Menu**, **0**, **5**
2. Press ▲ or ▼ to choose `Detection` or `No Detection`.
   Press **OK**.
3. Press **Stop/Exit**.

Telephone line interference

If you are having difficulty sending or receiving a fax due to possible interference on the telephone line, we recommend that you adjust the Equalization for compatibility to reduce the modem speed for fax operations.

1. Press **Menu**, **2**, **0**, **1**.
2. Press ▲ or ▼ to choose `Basic(for VoIP)`, `Normal` or `High`.
   - `Basic(for VoIP)` cuts the modem speed to 9600 bps and turns the error correction mode (ECM) off.

     For a standard telephone line: If you regularly experience interference on your standard telephone line try this setting.

     If you are using VoIP: VoIP service providers offer fax support using various standards. If you regularly experience fax transmission errors try this setting.
   - `Normal` sets the modem speed at 14400 bps.
   - `High` sets the modem speed at 33600 bps.

   Press **OK**.
3. Press **Stop/Exit**.

Note

When you change the Compatibility to `Basic(for VoIP)`, the ECM feature is only available for colour fax sending.

Error and maintenance messages

As with any sophisticated office product, errors may occur and consumable items may need to be replaced. If this happens, your machine identifies the error or required routine maintenance and shows the appropriate message. The most common error and maintenance messages are shown below.

You can clear most errors and perform routine maintenance messages by yourself. If you need more help, the Brother Solutions Center offers the latest FAQs and troubleshooting tips:

Visit us at http://solutions.brother.com/

Error Message	Cause	Action
`Access Error` (MFC-9320CW only)	The device is removed from the USB direct interface while the data is processing.	Press **Stop/Exit**. Reinsert the device and try to print with Direct Print.
`Belt End Soon`	The belt unit is near the end of its life.	Buy a new belt unit before you get a `Replace Belt` message.
`Calibrate`	Calibration failed.	Press **Mono Start** or **Colour Start** and try it again. ■ Turn off the machine. Wait a few seconds, then turn it on again. ■ Identify the colour causing the problem and put in a new drum unit. (See *Replacing the drum units* on page 174.) To identify the colour of the drum unit, visit us at http://solutions.brother.com/ to view our FAQs and troubleshooting tips. ■ Put in a new belt unit. (See *Replacing the belt unit* on page 177.) ■ Put in a waste toner box. (See *Replacing the waste toner box* on page 181.) ■ If the problem continues, call your dealer or Brother Customer Service.
`Cartridge Error Put the Black (K) Toner Cartridge back in.` [1] [1] The colour of the problem toner cartridge is shown in the message.	The toner cartridge is not installed correctly.	Take out the drum unit and toner cartridge assembly for the toner colour that is indicated on the LCD. Remove the toner cartridge and then re-install it in the drum. Put the drum unit and toner cartridge assembly back into the machine again.

Error Message	Cause	Action
Cooling Down Wait for a while	The temperature of the drum unit or toner cartridge is too hot. The machine will pause its current print job and go into cooling down mode. During the cooling down mode, you will hear the cooling fan running while the LCD shows Cooling Down, and Wait for a while.	Make sure that you can hear the fan in the machine spinning and that the exhaust outlet is not blocked by something. If the fan is spinning, remove any obstacles that surround the exhaust outlet, and then leave the machine turned on but do not use it for several minutes. If the fan is not spinning do the following: Disconnect the machine from the power for several minutes, then reconnect it. (The machine can be turned off for up to 4 days without losing faxes stored in the memory. See *Transferring your faxes or Fax Journal report* on page 148.)
Comm.Error	Poor telephone line quality caused a communication error.	Try sending the fax again or try connecting the machine to another telephone line. If the problem continues, call the telephone company and ask them to check your telephone line.
Connection Fail	You tried to poll a fax machine that is not in Polled Waiting mode.	Check the other fax machine's polling setup.
Cover is Open	The ADF cover is not closed completely.	Close the ADF cover of the machine, then press **Stop/Exit**.
	The top cover is not closed completely.	Close the top cover of the machine.
Cover is Open	The fuser cover is not closed completely or paper was jammed in the back of the machine when you turned on the power.	■ Close the fuser cover of the machine. ■ Make sure paper is not jammed inside the back of the machine, and then close the fuser cover and press **Mono Start** or **Colour Start**.
DIMM Error	The DIMM is not installed correctly. Or the DIMM is broken.	Turn off the machine. Re-install the DIMM correctly. Wait a few seconds, and then turn it on again. If this error message appears again, replace the DIMM with a new one. (See *Installing extra memory* on page 123.)
Disconnected	The other person or other person's fax machine stopped the call.	Try to send or receive again.
Document Jam	The document was not inserted or fed correctly, or the document scanned from the ADF was too long.	See *Document jams* on page 149 or *Using the automatic document feeder (ADF)* on page 22.
Drum Error	The corona wire on the drum unit needs to be cleaned.	Clean the corona wire on the drum unit. (See *Cleaning the corona wires* on page 158.)
	It is time to replace the drum units.	Replace the drum unit with a new one for the colour that is indicated on the LCD. (See *Replacing the drum units* on page 174.)

Error Message	Cause	Action
Drums End Soon	The drum units are near the end of their life.	Buy new drum units before you get a Replace Drums message.
Drum End Soon(X) [1]	The drum unit for the colour indicated on the LCD is near the end of its life.	Buy new drum unit for the colour indicated on the LCD before you get a Replace Drum(X) [1] message.
DR mode in Use (except New Zealand)	The machine is set to Distinctive Ring mode. You can not change the Receive Mode from Manual to another mode.	Set Distinctive Ring to off. For Austlaria, see *Telstra® FaxStream® Duet® (Distinctive Ringing)* on page 52. For Other countries, see *Distinctive Ringing (For Singapore and Hong Kong)* on page 56.
Faxability On (For New Zealand)	The machine is set to Faxability mode. You can not change the Recieve Mode from Manual to another mode.	Set Faxability to off. See *FaxAbility* on page 54.
Fuser Error	The temperature of fuser unit does not rise at a specified temperature within specified time. The fuser unit is too hot.	Turn the power switch off, wait a few seconds, and then turn it on again. Leave the machine for 15 minutes with the power on. The machine can be turned off for up to 60 hours without losing faxes stored in the memory. (See *Transferring your faxes or Fax Journal report* on page 148.)
Init Unable XX (XX=Error Code)	The machine has a mechanical problem.	■ Disconnect the machine from the power for several minutes, then reconnect it. (The machine can be turned off for up to 60 hours without losing faxes stored in the memory. See *Transferring your faxes or Fax Journal report* on page 148.) ■ If the problem continues, call Brother Customer Service.
Jam Inside	The paper is jammed inside the machine.	(See *Paper jams* on page 150.)
Jam Rear	The paper is jammed in the back of the machine.	(See *Paper jams* on page 150.)
Jam Tray	The paper is jammed in the paper tray of the machine.	(See *Paper jams* on page 150.)
No Belt Unit	The belt unit is not installed correctly.	Re-install the belt unit. (See *Replacing the belt unit* on page 177.)

Error Message	Cause	Action
No Paper	The machine is out of paper or paper is not correctly loaded in the paper tray.	Do one of the following: ■ Refill the paper in the paper tray and press **Mono Start** or **Colour Start** or put the paper in the manual feed slot. ■ Remove the paper and load it again. Then press **Mono Start** or **Colour Start**. ■ If the problem is not solved, the paper pick-up roller may be stained. Clean the paper pickup roller. (See *Cleaning the paper pick-up rollers* on page 164.)
No Response/Busy	The number you dialled does not answer or is busy.	Verify the number and try again.
No Toner	The toner cartridge or the drum unit and toner cartridge assembly is not installed correctly.	Re-install the toner cartridge or the drum unit that is indicated on the LCD.
No Waste Toner	The waste toner box is not installed correctly.	Re-install the waste toner box. (See *Replacing the waste toner box* on page 181.)
Out of Memory	The machine's memory is full.	**Fax sending or copy operation in progress** Do one of the following: ■ Press **Mono Start** or **Colour Start** to send or copy the scanned pages. ■ Press **Stop/Exit** and wait until the other operations in progress finish, and then try again. ■ Clear the data from the memory. (See *Out of memory message* on page 45 or page 92.) **Print operation in process** Do one of the following: ■ Reduce print resolution. (See *Advanced tab* in the *Software User's Guide* on the CD-ROM.) ■ Clear the faxes from the memory. (See *Out of memory message* on page 92.)

Error Message	Cause	Action
Print Unable XX (XX=Error Code)	The machine has a mechanical problem.	Do one of the following: ■ Disconnect the machine from the power for several minutes, then reconnect it. (The machine can be turned off for up to 60 hours without losing faxes stored in the memory. See *Transferring your faxes or Fax Journal report* on page 148.) ■ If the problem continues, call your Brother dealer.
Print Unable 1A	One of the issues that can cause this error is that condensation may form inside the machine after a room temperature change.	Turn the power switch off and fully open the top cover. Leave the machine off and open for 30 minutes to remove any condensation from inside the machine, then close the top cover and turn the machine on again. If this does not clear the error, call your dealer or a Brother Customer Service.
Protected Device (MFC-9320CW only)	The protect switch of the USB Flash memory drive is on.	Turn off the protect switch of the USB Flash memory drive.
Registration	Registration failed.	Press **Mono Start** or **Colour Start** and try again. Do one of the following: ■ Turn off the machine's power switch. Wait a few seconds, then turn it on again. ■ Try Manual Registration, **Menu**, **4**, **7**. (See *Manual Registration* on page 165.) ■ Put in a new belt unit. (See *Replacing the belt unit* on page 177.) ■ If the problem continues, call your Brother dealer.
Rename the File (MFC-9320CW only)	There is already a file on the USB Flash memory drive with the same name as the file you are trying to save.	Change the file name of the file on the USB Flash memory drive or the file you are trying to save.
Replace Belt	It is time to replace the belt unit.	Replace the belt unit. (See *Replacing the belt unit* on page 177.)
Replace Drums	It is time to replace the drum units.	Replace the drum units. (See *Replacing the drum units* on page 174.)
	The drum unit counter was not reset when a new drum was installed.	Reset the drum unit counter. (See *Resetting the drum counter* on page 177.)
Replace Drum(X) [1]	It is time to replace the drum unit for the indicated colour.	Replace the drum unit for the colour indicated on the LCD. (See *Replacing the drum units* on page 174.)

Error Message	Cause	Action
Replace Fuser	It is time to replace the fuser unit.	Call your Brother dealer to replace the fuser unit.
Replace PF Kit	It is time to replace the paper feeding kit.	Call your Brother dealer to replace the PF Kit.
Replace Toner	The toner cartridge is at the end of its life.	Replace the toner cartridge for the colour indicated on the LCD. (See *Replacing a Toner cartridge* on page 168.)
Replace WT Box	It is time to replace the waste toner box.	Replace the waste toner box. (See *Replacing the waste toner box* on page 181.)
Scan Unable XX (XX=Error Code)	The machine has a mechanical problem.	■ Disconnect the machine from the power for several minutes, then reconnect it. (The machine can be turned off for up to 60 hours without losing faxes stored in the memory. See *Transferring your faxes or Fax Journal report* on page 148.) ■ If the problem continues, call Brother Customer Service.
Short paper	The paper size detected is shorter than the paper size defined in the print job and the paper size being used requires the back cover to be open.	Open the back cover (back output tray) and remove any printed pages. Leave the back cover open and press **Mono Start** or **Colour Start**.
Size mismatch	The paper in the tray is not the correct size.	Load the correct size of paper in the tray and set the “Paper Size” (**Menu**, **1**, **2**, **2** (See *Paper Size* on page 24)).
Small paper	The paper size defined in the printer driver requires the back cover to be open.	Open the back cover (back output tray) and press **Mono Start** or **Colour Start**. (See *Printing on thick paper, labels, envelopes or small paper* on page 13)
Toner Low	The toner cartridge is near the end of its life.	Buy a new toner cartridge for the colour that is indicated on the LCD before you get a Replace Toner message.
Too Many Files (MFC-9320CW only)	There are too many files stored on the USB Flash memory drive.	Reduce the number of files stored on the USB Flash memory drive.
Unusable Device (MFC-9320CW only)	An incompatible or broken device has been connected to the USB direct interface.	Remove the USB Flash memory drive from the USB direct interface.
WT Box End Soon	The waste toner box is almost full.	Buy a new waste toner box before you get a Replace WT Box message.

[1] (X) shows the toner cartridge or drum unit colour that is near the end of its life. (K)=Black, (Y)=Yellow, (M)=Magenta, (C)=Cyan.

Transferring your faxes or Fax Journal report

If the LCD shows:

- `Init Unable XX`
- `Print Unable XX`
- `Scan Unable XX`

We recommend transferring your faxes to another fax machine or to your PC. (See *Transferring faxes to another fax machine* on page 148 or *Transferring faxes to your PC* on page 148.)

You can also transfer the Fax Journal report to see if there are any faxes you need to transfer. (See *Transferring Fax Journal report to another fax machine* on page 148.)

Note

If there is an error message on the machine's LCD, after the faxes have been transferred, disconnect the machine from the power source for several minutes, and then reconnect it.

Transferring faxes to another fax machine

If you have not set up your Station ID, you cannot enter fax transfer mode. (See *Enter personal information (station ID)* in the *Quick Setup Guide*.)

1. Press **Menu**, **9**, **0**, **1**.
2. Do one of the following:
   - If the LCD shows `No Data`, there are no faxes left in the machine's memory. Press **Stop/Exit**.
   - Enter the fax number to which faxes will be forwarded.
3. Press **Mono Start** or **Colour Start**.

Transferring faxes to your PC

You can transfer the faxes from your machine's memory to your PC.

1. Make sure that you have installed **MFL-Pro Suite** on your PC, and then turn on **PC-Fax Receiving** on the PC. (For details about PC Fax Receive, see *PC-FAX receiving* in the *Software User's Guide* on the CD-ROM.)
2. Make sure that you have set `PC Fax Receive` on the machine. (See *PC Fax Receive* on page 73.) If faxes are in the machine's memory when you set up PC Fax Receive, the LCD will ask if you want to transfer the faxes to your PC.
3. Do one of the following:
   - To transfer all faxes to your PC, press **1**. You will be asked if you want a backup print.
   - To exit and leave the faxes in the memory, press **2**.
4. Press **Stop/Exit**.

Transferring Fax Journal report to another fax machine

If you have not set up your Station ID, you cannot enter fax transfer mode. (See *Enter personal information (station ID)* in the *Quick Setup Guide*.)

1. Press **Menu**, **9**, **0**, **2**.
2. Enter the fax number to which the Fax Journal report will be forwarded.
3. Press **Start**.

Document jams

If the document is jammed, follow the steps below.

IMPORTANT

After removing a jammed document, check that no paper scraps are left in the machine that could cause another jam.

Document is jammed in the top of the ADF unit

1. Take out any paper from the ADF that is not jammed.
2. Open the ADF cover.
3. Pull the jammed document out to the left.

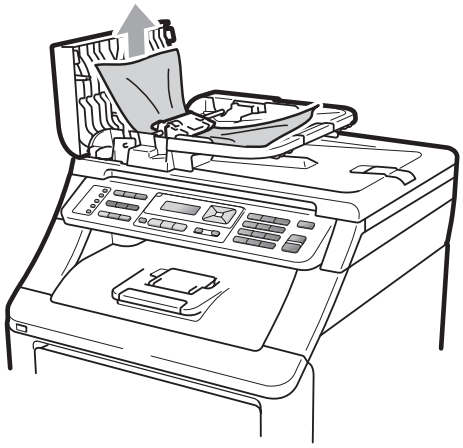

4. Close the ADF cover.
5. Press **Stop/Exit**.

Document is jammed under the document cover

1. Take out any paper from the ADF that is not jammed.
2. Lift the document cover.
3. Pull the jammed document out to the right.

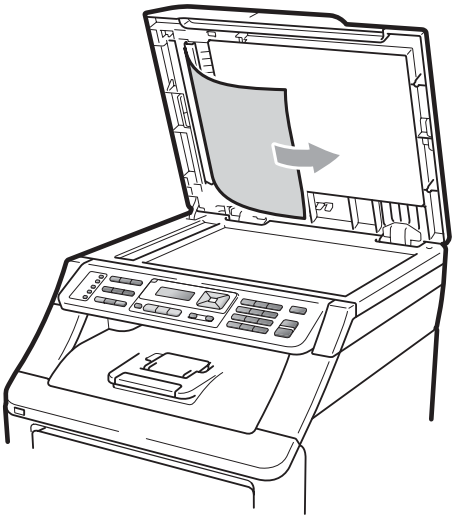

4. Close the document cover.
5. Press **Stop/Exit**.

Document is jammed at the output tray

1. Take out any paper from the ADF that is not jammed.
2. Pull the jammed document out to the right.

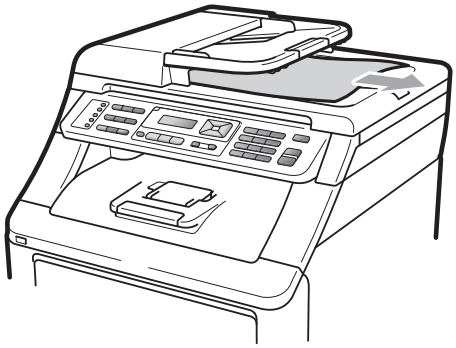

3. Press **Stop/Exit**.

Paper jams

To clear paper jams, please follow the steps in this section.

IMPORTANT

Please confirm that you have installed all toner cartridges and drum units in the machine. Failure to install these items or incorrect installation may cause a paper jam in your Brother machine.

Note

If the error message remains, open and close the top cover and fuser cover firmly to reset the machine.

Note

The LCD names for the paper trays are as follows:

- Standard paper tray: `Tray`
- Manual Feed Slot: `Manual Feed`

Paper is jammed in the Paper Tray

If the LCD shows `Jam Tray`, follow these steps:

1. Pull the paper tray completely out of the machine.

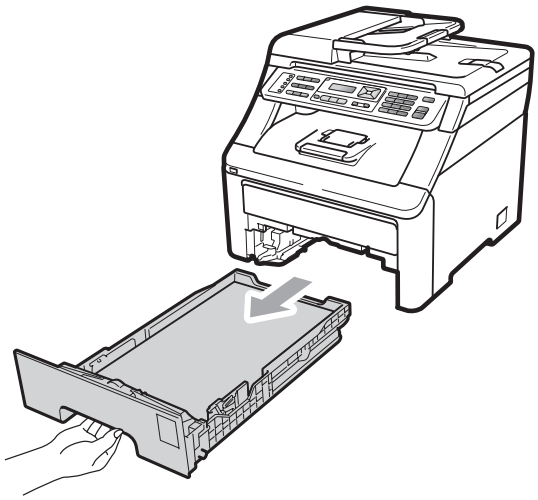

2. Use both hands to slowly pull out the jammed paper.

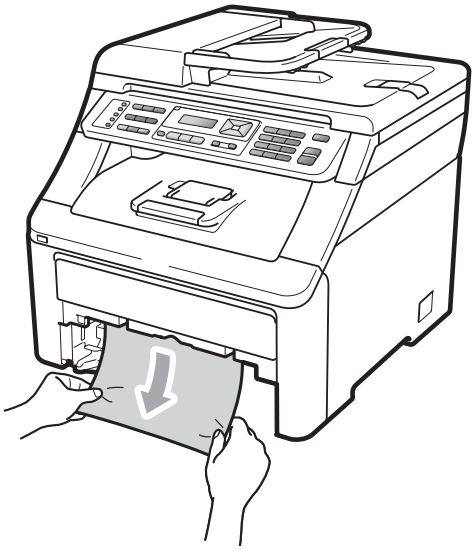

IMPORTANT

If the paper cannot easily be removed in this direction, stop and follow the instructions for *Paper is jammed inside the machine* on page 153.

Note

Pulling out the jammed paper downwards allows you to remove the paper easier.

3 Make sure the paper is below the maximum paper mark (▼) of the paper tray. While pressing the green paper-guide release lever, slide the paper guides to fit the paper size. Make sure that the guides are firmly in the slots (See *Loading paper in the standard paper tray* on page 11).

4 Put the paper tray firmly back in the machine.

5 Press **Mono Start** or **Colour Start** to resume printing.

Paper is jammed at the output paper tray

When the paper is jammed at the output paper tray, follow these steps:

1 Open the scanner using both hands.

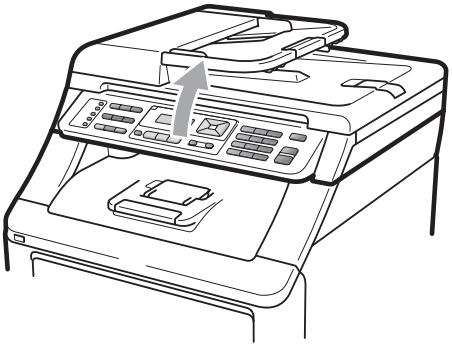

Note

When the top cover is open, you cannot open the scanner.

2 Press down the green lever and remove the paper.

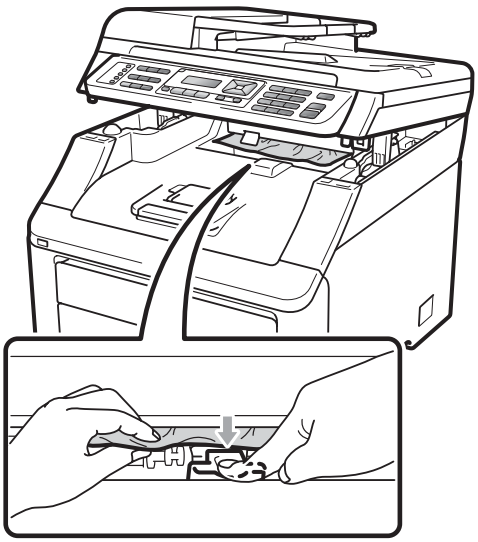

3 Push the scanner down with both hands to close it.

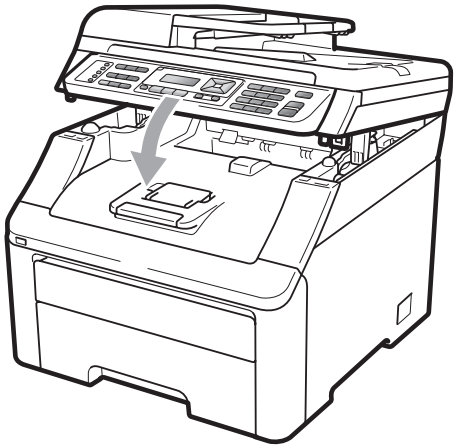

Paper is jammed at the back of the machine

If the LCD shows `Jam Rear`, a paper jam has occurred behind the face-up output tray. Follow these steps:

1. Turn off the machine's power switch. Unplug the telephone line cord first, disconnect all cables, and then unplug the power cord from the electrical socket.

2. Open the back cover.

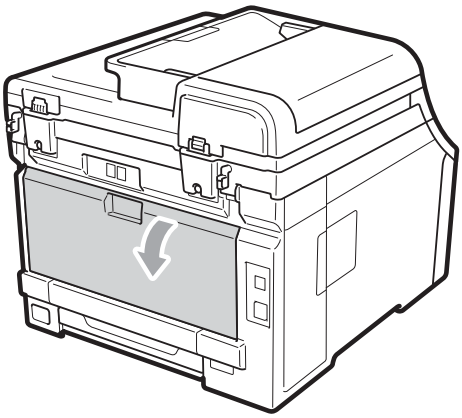

CAUTION

HOT SURFACE

After you have just used the machine, some internal parts of the machine will be extremely hot. Wait at least 10 minutes for the machine to cool down before attempting to clear the paper jam.

3. Push down and pull the green tabs at the left and right hand sides toward you and fold down the fuser cover (1).

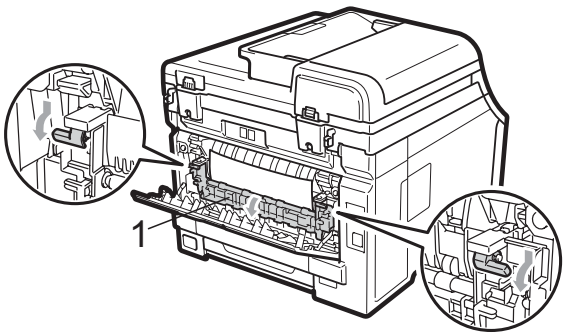

4. Using both hands, gently pull the jammed paper out of the fuser unit.

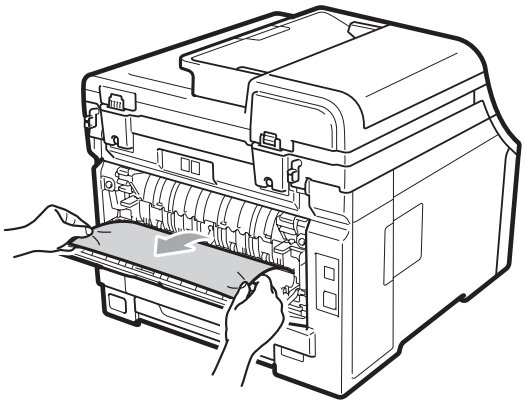

5. Close the fuser cover (1).

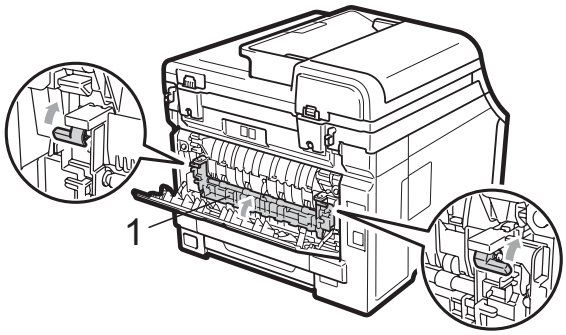

6. Fully close the back cover.

7. Plug the machine's power cord back into the electrical socket first, and reconnect all cables and telephone line cord. Turn on the machine's power switch.

Paper is jammed inside the machine

If the LCD shows `Jam Inside`, follow these steps:

1. Turn off the machine. Unplug the telephone line cord first, disconnect all cables, and then unplug the power cord from the electrical socket.

2. Fully open the top cover by lifting up on the handle (1).

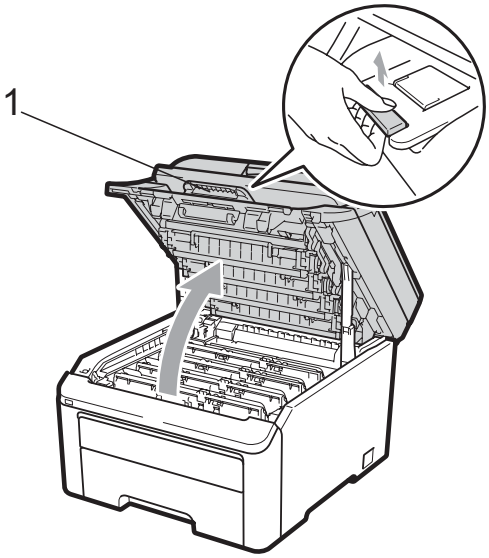

CAUTION

HOT SURFACE

After you have just used the machine, some internal parts of the machine will be extremely hot. Wait at least 10 minutes for the machine to cool down before attempting to clear the paper jam.

IMPORTANT

When the scanner is open, you cannot open the top cover.

3. Take out all the drum unit and toner cartridge assemblies. Repeat this for all the drum unit and toner cartridge assemblies.

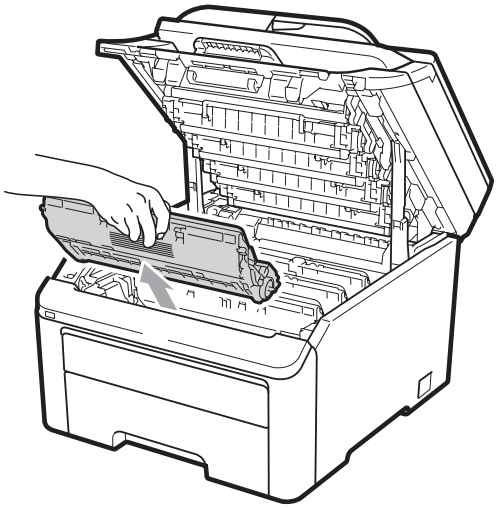

IMPORTANT

- We recommend that you place the drum unit and toner cartridge assemblies on a clean, flat surface with a sheet of disposable paper or cloth underneath it in case you accidentally spill or scatter toner.
- To prevent damage to the machine from static electricity, DO NOT touch the electrodes shown in the illustration.

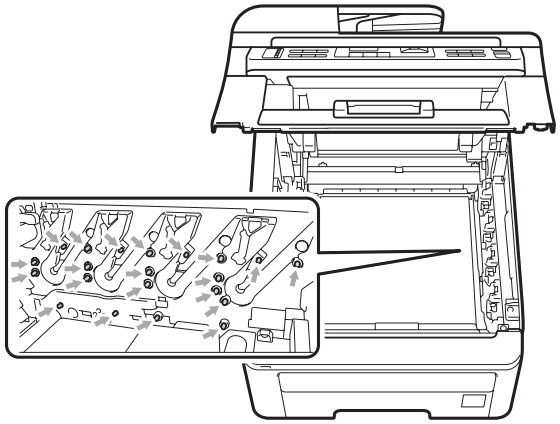

- Handle the toner cartridge carefully. If toner scatters on your hands or clothes, wipe or wash it off with cold water at once.

- To avoid print quality problems, DO NOT touch the shaded parts shown in the illustrations.

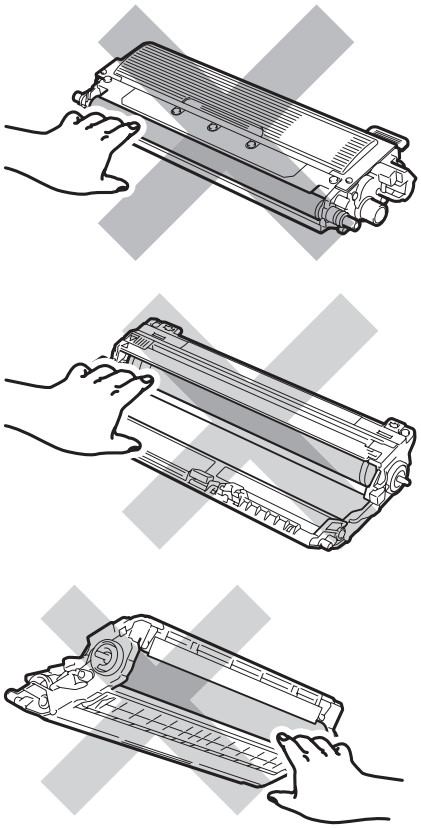

4 Pull out the jammed paper slowly.

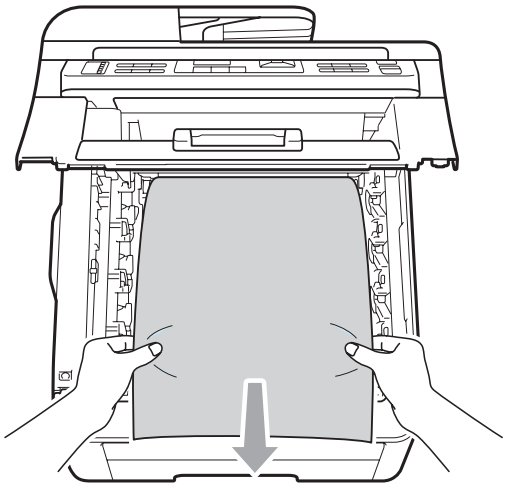

5 Slide each drum unit and toner cartridge assembly into the machine. Make sure that you match the toner cartridge colour to the same colour label on the machine. Repeat this for all the drum unit and toner cartridge assemblies.

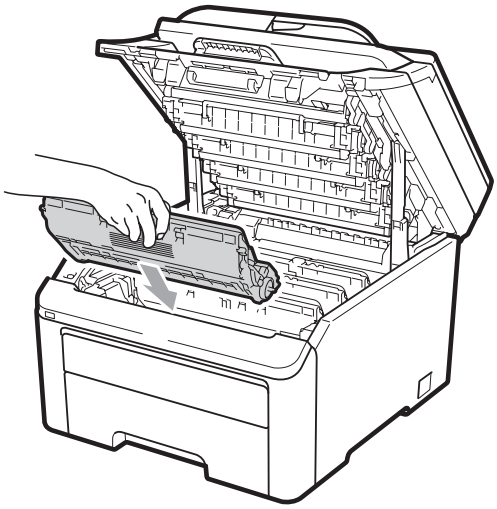

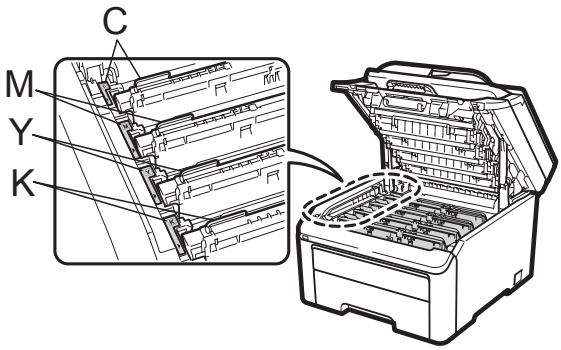

C-Cyan M-Magenta Y-Yellow K-Black

6 Close the top cover.

7 Plug the machine's power cord back into the electrical socket first, and reconnect all cables and telephone line cord. Turn on the machine.

Routine maintenance

Clean the outside and inside of the machine regularly with a dry, lint-free cloth. When you replace the toner cartridge or the drum unit, make sure that you clean the inside of the machine. If printed pages are stained with toner, clean the inside of the machine with a dry, lint-free cloth.

WARNING

Use neutral detergents. Cleaning with volatile liquids such as thinner or benzine will damage the surface of the machine.

DO NOT use any flammable substances, spray or organic solvent/liquids containing alcohol/ammonia to clean the inside or outside of the machine. Doing this may cause a fire or electrical shock. (For more information see *Important Safety Instructions* on page 114.)

Be careful not to inhale toner.

Cleaning the outside of the machine

1. Turn off the machine. Unplug the telephone line cord first, disconnect all cables, and then unplug the power cord from the electrical socket.
2. Pull the paper tray completely out of the machine.

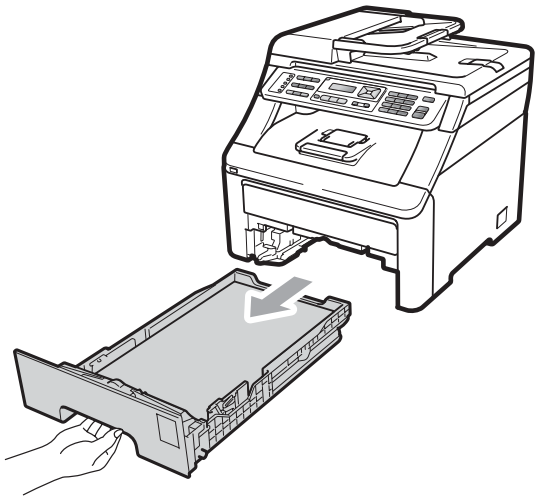

3. Wipe the outside of the machine with a dry, lint-free soft cloth to remove dust.

4. Remove any paper that is in the paper tray.

C

5 Wipe the inside and the outside of the paper tray with a dry, lint-free soft cloth to remove dust.

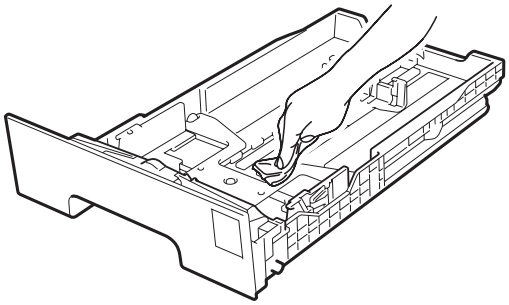

6 Re-load the paper and put the paper tray firmly back in the machine.

7 Plug the machine's power cord back into the electrical socket first, and reconnect all cables and telephone line cord. Turn on the machine.

Cleaning the scanner glass

1 Turn off the machine. Unplug the telephone line cord first, disconnect all cables and then unplug the power cord from the electrical socket.

2 Lift the document cover (1).
Clean the white plastic surface (2) and scanner glass (3) underneath it with a soft lint-free cloth moistened with water.

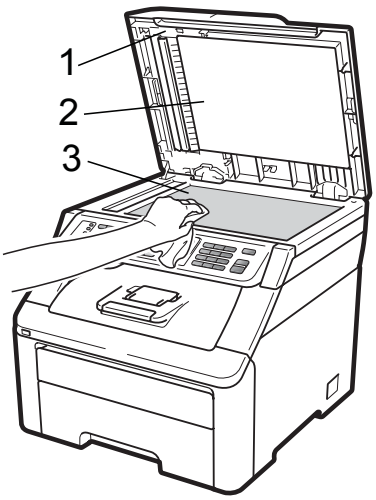

3 In the ADF unit, clean the white bar (1) and the scanner glass strip (2) underneath it with a soft lint-free cloth moistened with water.

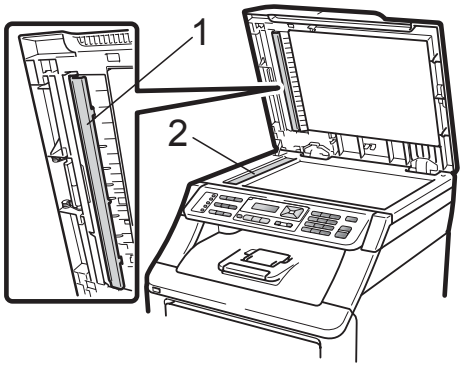

4 Plug the machine's power cord back into the electrical socket first, and reconnect all cables and telephone line cord. Turn on the machine.

Note

In addition to cleaning the scanner glass and glass strip with a soft lint-free cloth moistened with water, run your finger tip over the glass to see if you can feel anything on it. If you feel dirt or debris, clean the glass again concentrating on that area. You may need to repeat the cleaning process three or four times. To test, make a copy after each cleaning.

Cleaning the LED heads

WARNING

DO NOT use any flammable substances, spray or organic solvent/liquids containing alcohol/ammonia to clean the inside or outside of the machine. Doing this may cause a fire or electrical shock. For more information see *Important Safety Instructions* on page 119.

IMPORTANT

DO NOT touch the windows of the LED heads with your fingers.

1. Before you clean the inside of the machine, turn off the machine. Unplug the telephone line cord first, and then unplug the power cord from the electrical socket.
2. Fully open the top cover by lifting up on the handle (1).

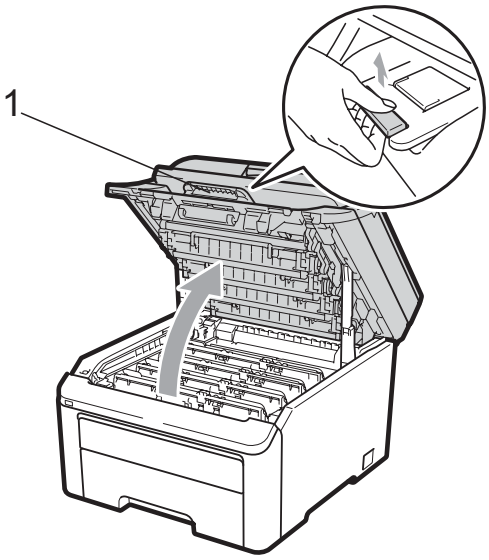

IMPORTANT

When the scanner is open, you cannot open the top cover.

3. Wipe the windows of the LED heads (1) with a dry, lint-free cloth. Be careful not to touch the windows of the LED heads (1) with your fingers.

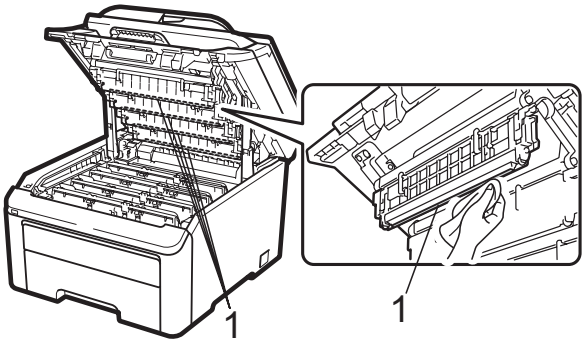

4. Close the top cover of the machine.
5. Plug the machine's power cord back into the electrical socket first, and then plug in the telephone line cord. Turn on the machine.

C

Cleaning the corona wires

If you have print quality problems, clean the corona wires as follows:

1. Turn off the machine. Unplug the telephone line cord first, disconnect all cables, and then unplug the power cord from the electrical socket.

2. Fully open the top cover by lifting up on the handle (1).

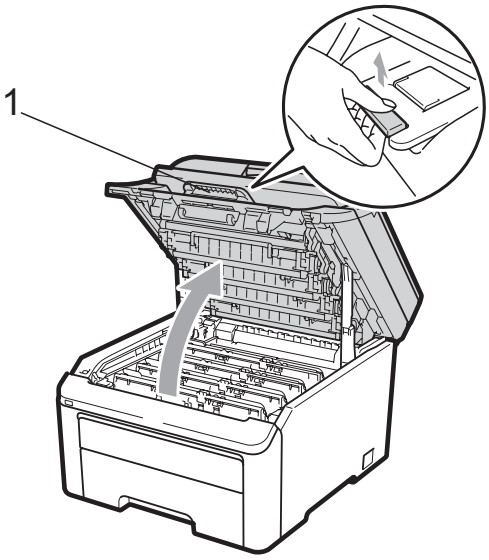

IMPORTANT

When the scanner is open, you cannot open the top cover.

3. Take out the drum unit and toner cartridge assemblies.

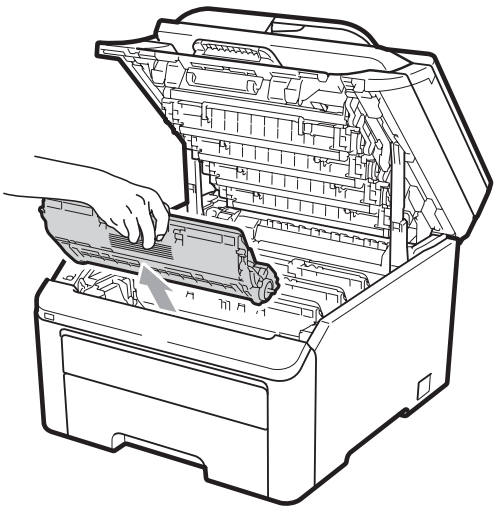

IMPORTANT

- We recommend that you place the drum unit and toner cartridge assembly on a clean, flat surface with a sheet of disposable paper or cloth underneath it in case you accidentally spill or scatter toner.
- To prevent damage to the machine from static electricity, DO NOT touch the electrodes shown in the illustration.

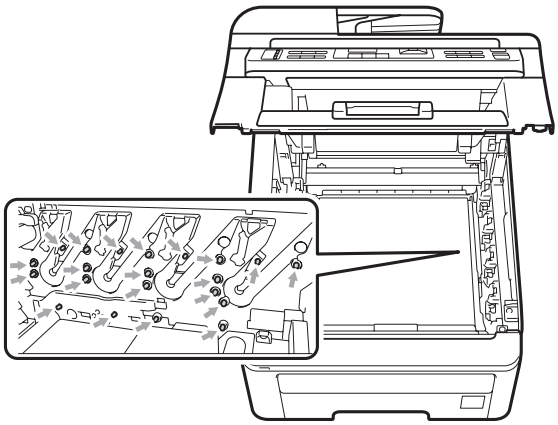

4. Clean the primary corona wire inside the drum unit by gently sliding the green tab from left to right and right to left several times.

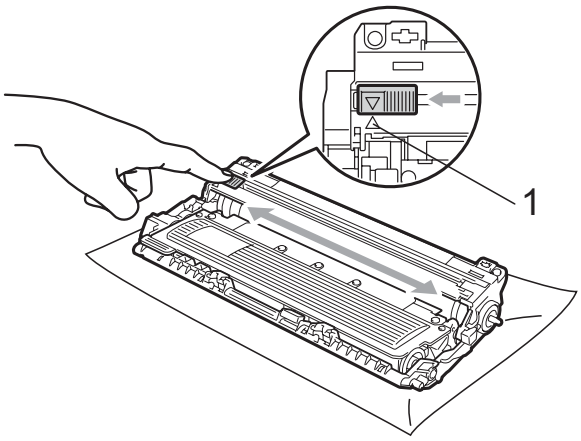

Note

Be sure to return the tab to the home position (▲) (1). If you do not, printed pages may have a vertical stripe.

5 Slide each drum unit and toner cartridge assembly into the machine. Make sure that you match the toner cartridge colour to the same colour label on the machine.

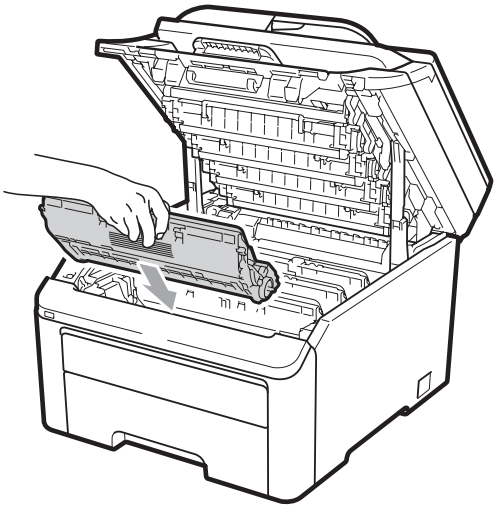

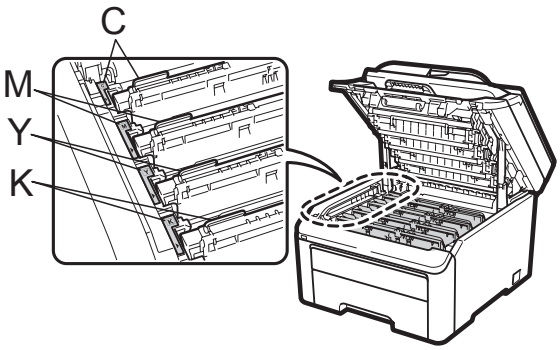

C-Cyan M-Magenta Y-Yellow K-Black

6 Repeat steps ❸ to ❺ to clean the remaining corona wires.

7 Close the top cover of the machine.

8 Plug the machine's power cord back into the electrical socket first, and then reconnect all cables and telephone line cord. Turn on the machine.

Cleaning the drum unit

Small spots on the printed pages

If your printout has any small white or coloured spots, follow the steps below to solve the problem.

1 Open the manual feed slot cover.

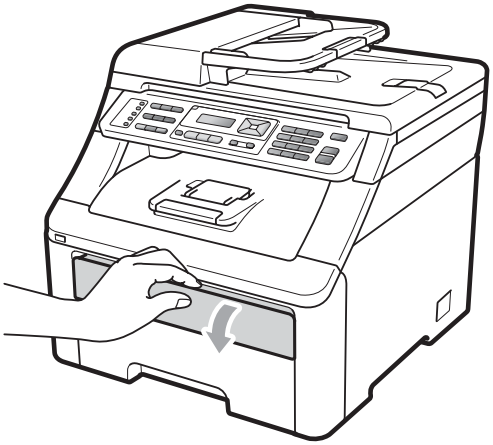

2 Using both hands, slide the manual feed slot paper guides to the width of the paper that you are going to use.

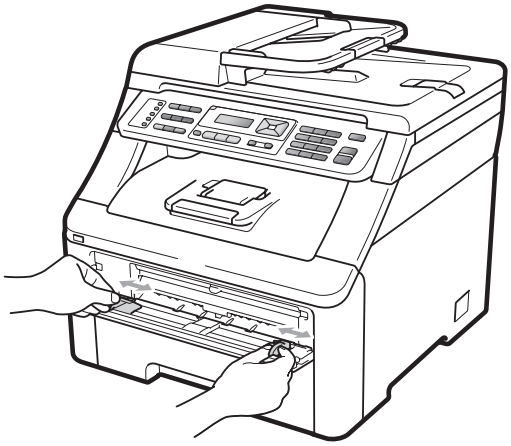

C

3 Using both hands, put one blank sheet of paper in the manual feed slot until the front edge of the paper touches the paper feed roller. Wait until the machine automatically feeds the paper. When you feel the machine pull in the paper, let go.

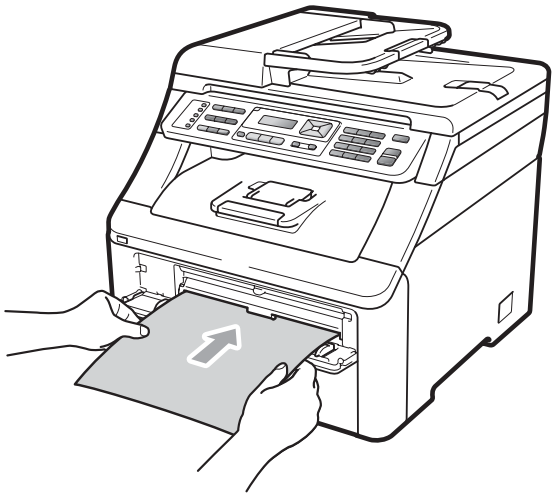

Note

- Make sure that the paper is straight and in the correct position on the manual feed slot. If it is not, the paper may not be fed correctly, resulting in a paper jam.
- Do not put more than one piece of paper in the manual feed slot at any one time, as it may cause a jam.
- If you put paper in the manual feed slot before the machine is in the Ready mode, an error may occur and the machine will stop printing.

4 Make sure that the machine is in the Ready mode.
Press **Menu**, **4**, **8**.

```
Drum Cleaning
Press Start
```

5 Press **Mono Start** or **Colour Start**. The machine will pull in the piece of paper and start cleaning the drum unit.

```
Drum Cleaning
Please Wait
```

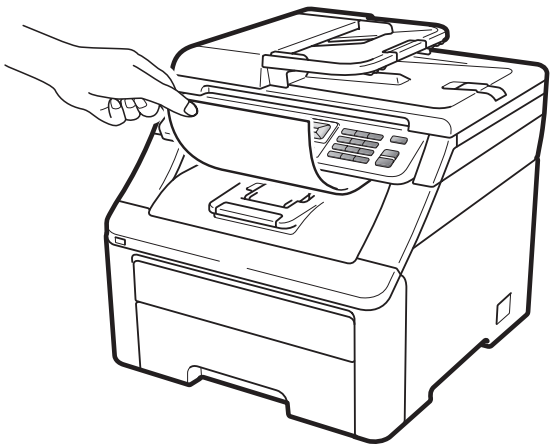

6 When the machine has finished cleaning, `Completed` appears on the LCD. Press **Stop/Exit** so that the machine returns to the Ready mode.

7 Repeat steps ❸ to ❻ two more times using a new blank sheet of paper each time. Upon completion please discard the used paper. If the print problem is not resolved please contact your Brother dealer.

Large spots on the printed pages

If your printout has coloured spots at 94 mm intervals, follow the steps below to solve the problem.

1. Turn off the machine. Unplug the telephone line cord first, disconnect all cables, and then unplug the power cord from the electrical socket.

2. Fully open the top cover by lifting up on the handle (1).

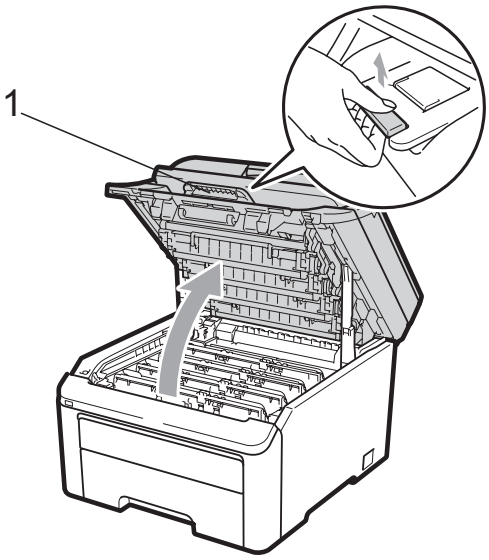

IMPORTANT

When the scanner is open, you cannot open the top cover.

3. See the print sample to identify the colour causing the problem. The colour of the spots is the colour of the drum you should clean. For example, if the spots are cyan, you should clean the drum for cyan. Take out the drum unit and toner cartridge assembly of the colour causing the problem.

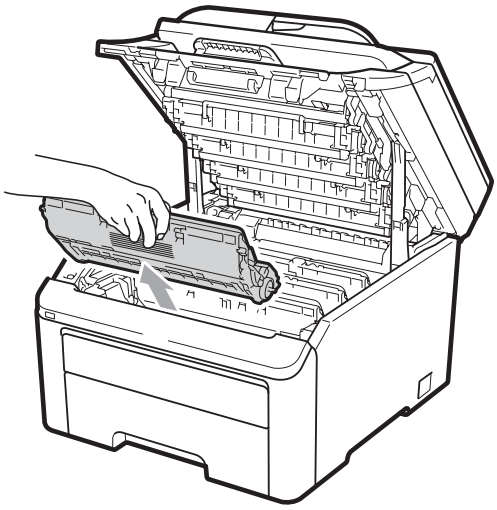

IMPORTANT

- We recommend that you place the drum unit and toner cartridge assembly on a clean, flat surface with a sheet of disposable paper or cloth underneath it in case you accidentally spill or scatter toner.
- To prevent damage to the machine from static electricity, DO NOT touch the electrodes shown in the illustration.

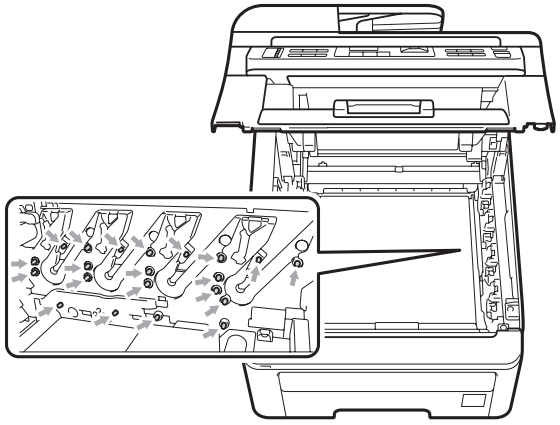

4 Push down the green-labelled lock lever (1) and take the toner cartridge out of the drum unit.

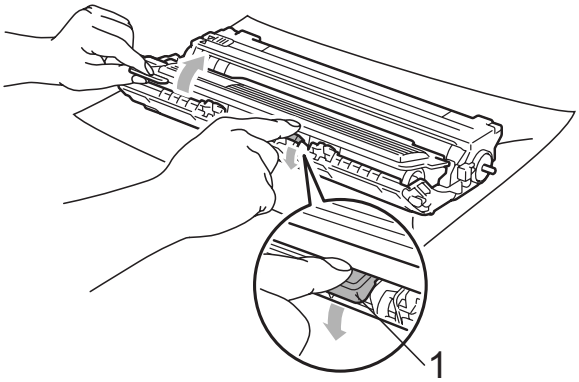

IMPORTANT

Handle the toner cartridge carefully. If toner scatters on your hands or clothes, wipe or wash it off with cold water at once.

5 Put the print sample in front of the drum unit, and find the exact position of the poor print.

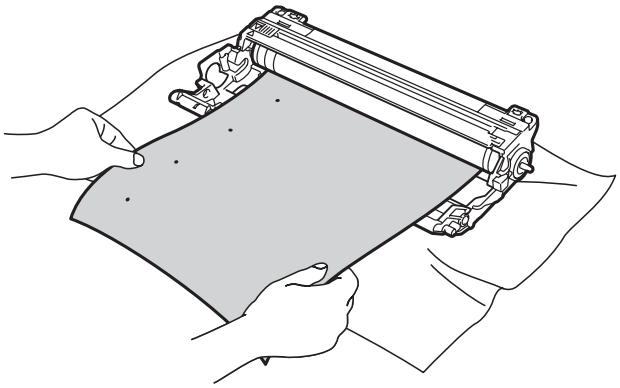

6 Turn the drum unit gear by hand while looking at the surface of the OPC drum (1).

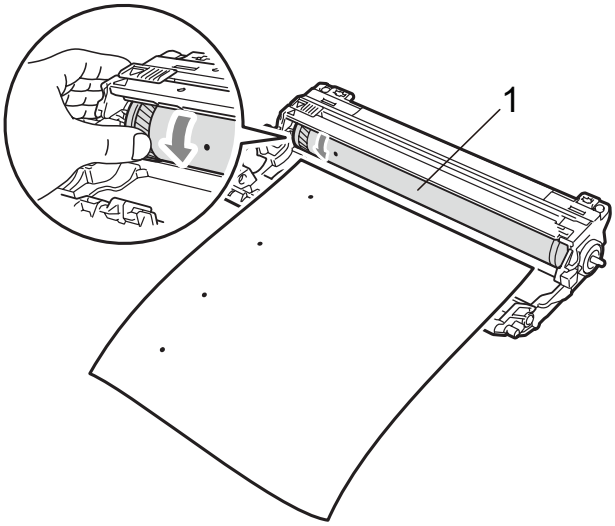

7 When you have found the mark on the drum that matches the print sample, wipe the surface of the OPC drum with a dry cotton swab until the dust or glue on the surface comes off.

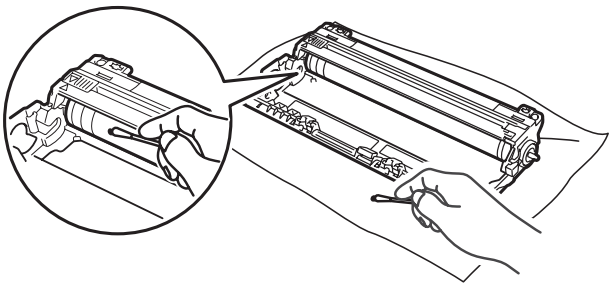

IMPORTANT

DO NOT clean the surface of the photosensitive drum with a sharp object.

8 Put the toner cartridge back firmly into the drum unit until you hear it lock into place.

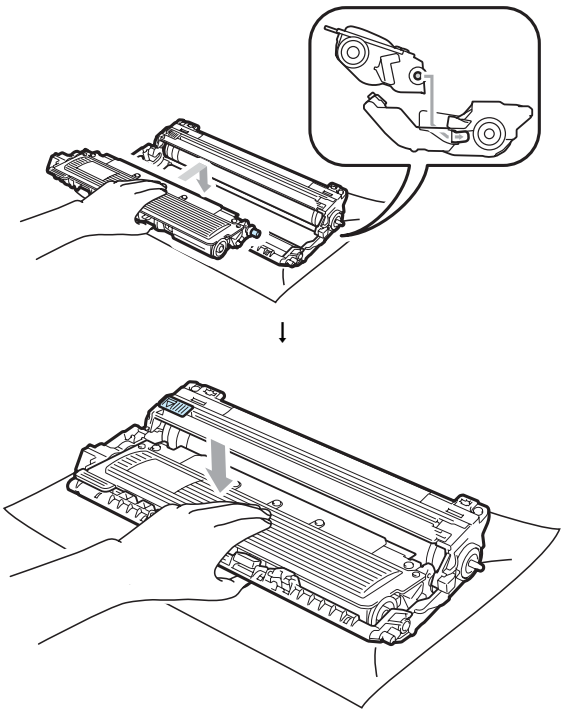

Note

Make sure that you put in the toner cartridge correctly or it may separate from the drum unit.

9 Slide each drum unit and toner cartridge assembly into the machine. Make sure that you match the toner cartridge colour to the same colour label on the machine.

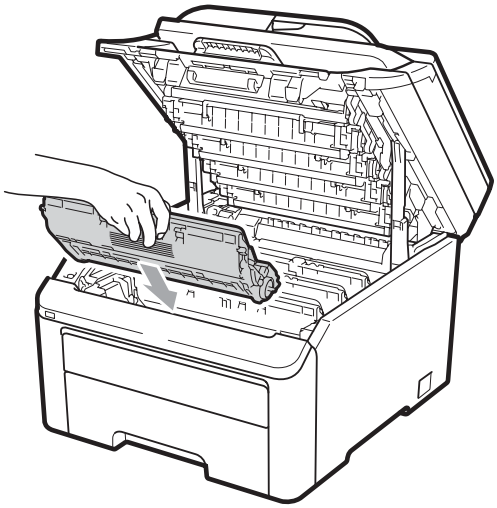

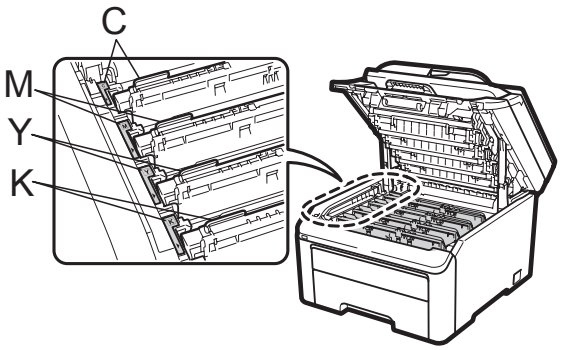

C-Cyan M-Magenta Y-Yellow K-Black

10 Close the top cover of the machine.

11 Plug the machine's power cord back into the electrical socket first, and then reconnect all cables and telephone line cord. Turn on the machine.

Cleaning the paper pick-up rollers

If you have paper feed problems, clean the pick-up rollers as follows:

1. Turn off the machine. Unplug the power cord from the electrical socket.
2. Pull the paper tray completely out of the machine.

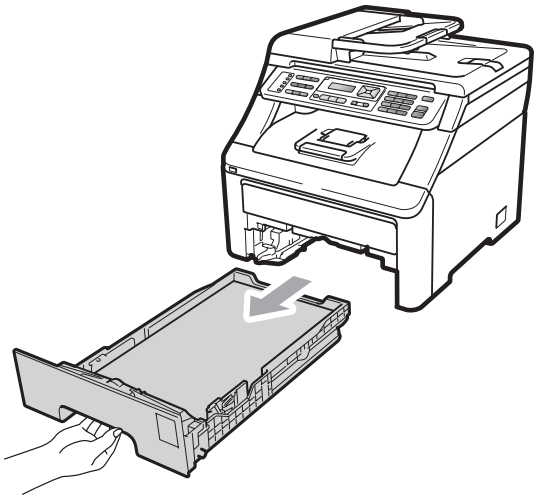

3. Tightly wring out a lint-free cloth soaked in lukewarm water, and then wipe the separator pad (1) of the paper tray with it to remove dust.

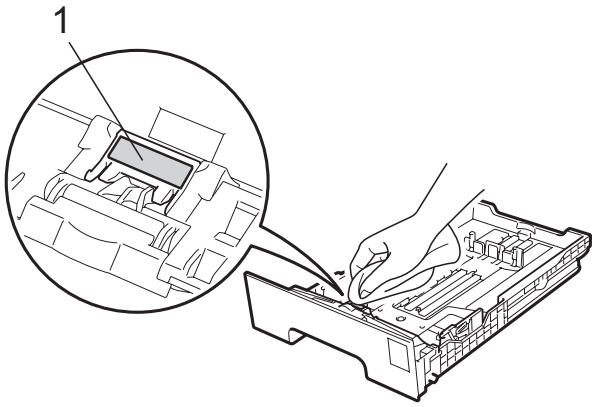

4. Wipe the two pick-up rollers (1) inside of the machine to remove dust.

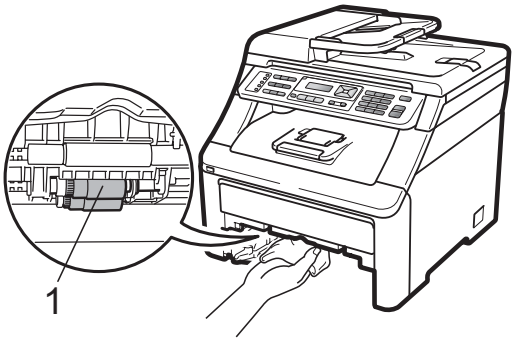

5. Put the paper tray back in the machine.
6. Plug the machine's power cord back into the electrical socket. Turn on the machine.

Calibration

The output density for each colour may vary depending on the environment the machine is in such as temperature and humidity. Calibration helps you to improve the colour density.

1. Press **Menu**, **4**, **5**.
2. Press ▲ or ▼ to select `Calibrate`.
3. Press **OK**.
4. Press **1** to select `Yes`.
5. Press **Stop/Exit**.

You can reset the calibration parameters back to those set at the factory.

1. Press **Menu**, **4**, **5**.
2. Press ▲ or ▼ to `Reset`.
3. Press **OK**.
4. Press **1** to select `Yes`.

5 Press **Stop/Exit**.

Note

- If an error message is displayed, press **Stop/Exit** and try again. For more information, see *Error and maintenance messages* on page 142.
- If you print using Windows® printer driver, you need to perform the calibration from the Windows® printer driver. See *Advanced tab* in the *Software User's Guide* on the CD-ROM.
- If you print using the Macintosh printer driver, you need to perform the calibration using the status monitor. See *Status Monitor* in the *Software User's Guide* on the CD-ROM. When the **Status Monitor** is open, choose **Control / Color Calibration** from the menu bar.

Auto Registration

Registration

If solid areas of colour or images have cyan, magenta or yellow fringes, you can use the auto-registration feature to correct the problem.

1 Press **Menu**, **4**, **6**, **1**.

2 To start, press **1**.
To exit, press **2**.

3 Press **Stop/Exit**.

Frequency

You can set the machine to carry out auto registration regularly, and also how often it occurs.

1 Press **Menu**, **4**, **6**, **2**.

2 Press ▲ or ▼ to choose `Low`, `Medium`, `High` or `Off`.
Press **OK**.

3 Press **Stop/Exit**.

Manual Registration

If colour still appears incorrectly after auto-registration, you will need to perform manual registration.

1 Press **Menu**, **4**, **7**, **1**.

2 Press **Mono Start** or **Colour Start** to start printing the colour registration chart.

3 When the machine has finished printing the registration sheet,
press **2** (`Set Regist.`) to correct the colour manually.

4 Starting at **1** (Magenta) on the chart, check which coloured bar has the most uniform print density and enter its number into the machine using the ▲ and ▼ keys.
Press **OK**.
Repeat for **2** (Cyan), **3** (Yellow), **4**, **5**, **6** to **9**.

5 Press **Stop/Exit**.

Replacing the consumable items

The following messages appear on the LCD in the Ready mode. These messages provide advanced warnings to replace the consumable items before they reach the end of their life. To avoid any inconvenience, you may want to buy spare consumable items before the machine stops printing.

LCD messages	Consumable item to replace	Approximate life	How to replace	Model name
Toner Low Prepare New X Toner Cartridge.	Toner cartridge X = Cyan, Magenta, Yellow, Black	<Black> 2,200 pages [1 2] <Cyan, Magenta, Yellow> 1,400 pages [1 2]	See page 168.	TN-240BK, TN-240C, TN-240M, TN-240Y
Drums End Soon	4 Drum units	15,000 pages [1 3 4]	See page 173.	DR-240CL [5]
Drum End Soon(X)	1 Drum unit **X** = **C**, **M**, **Y**, **K** **C** = Cyan **M** = Magenta **Y** = Yellow **K** = Black	15,000 pages [1 3 4]	See page 173.	DR-240CL-BK [6], DR-240CL-CMY [7]
Belt End Soon	Belt unit	50,000 pages [1]	See page 177.	BU-200CL
WT Box End Soon	Waste toner box	50,000 pages [1]	See page 181.	WT-200CL

1 A4 or Letter size single-sided pages.

2 Approx. cartridge yield is declared in accordance with ISO/IEC 19798.

3 1 page per job.

4 Drum life is approximate and may vary by type of use.

5 Contains 4pc. Drum Set.

6 Contains 1pc. Black Drum Unit.

7 Contains 1pc. Colour Drum Unit.

You will need to replace certain parts and clean the machine regularly.

LCD messages	Consumable item to replace	Approximate life	How to replace	Model name
`Replace Toner`	Toner cartridge	<Black> 2,200 pages [1 2] <Cyan, Magenta,Yellow> 1,400 pages [1 2]	See page 168.	TN-240BK, TN-240C, TN-240M, TN-240Y
`Replace Drums`	4 Drum units	15,000 pages [1 3 4]	See page 174.	DR-240CL [5]
`Replace Drum(X)`	1 Drum unit **X** = **C**, **M**, **Y**, **K** **C** = Cyan **M** = Magenta **Y** = Yellow **K** = Black	15,000 pages [1 3 4]	See page 174.	DR-240CL-BK [6], DR-240CL-CMY [7]
`Drum Error` [8]	Drum unit	15,000 pages [1 3 4]	See page 174.	
`Replace Belt`	Belt unit	50,000 pages [1]	See page 177.	BU-200CL
`Replace WT Box`	Waste toner box	50,000 pages [1]	See page 181.	WT-200CL
`Replace Fuser`	Fuser unit	50,000 pages [1]	Call your dealer or Brother Customer Service for a replacement fuser unit.	
`Replace PF Kit`	Paper feeding kit	50,000 pages [1]	Call your dealer or Brother Customer Service for a replacement paper feeding kit.	

1 A4 or Letter size single-sided pages.

2 Approx. cartridge yield is declared in accordance with ISO/IEC 19798.

3 1 page per job.

4 Drum life is approximate and may vary by type of use.

5 Contains 4pc. Drum Set.

6 Contains 1pc. Black Drum Unit.

7 Contains 1pc. Colour Drum Unit.

8 The `Drum Error` message has two cases: If the scroll message shows `Replace the Drum Unit.` you will need to replace the drum unit. If the scroll message shows `Slide the Green tab on Drum Unit.` you do not need to replace the drum unit, you just need to clean the corona wires. (See *Cleaning the corona wires* on page 158.)

Note

- Discard used consumable items according to local regulations, keeping it separate from domestic waste. If you have questions, call your local waste disposal office. Be sure to reseal the consumable items tightly so that the material inside does not spill.
- We recommend placing used consumable items on a piece of paper to prevent accidentally spilling or scattering the material inside.
- If you use paper that is not a direct equivalent for the recommended paper, the life of consumable items and machine parts may be reduced.
- The projected life of the cartridge is based on ISO/IEC 19798. Frequency of replacement will vary depending on the complexity of printed pages, percentage of coverage and type of media used.

Replacing a Toner cartridge

The Standard toner cartridges can print approximately 2,200 pages (black) or approximately 1,400 pages (yellow, magenta, cyan) [1]. Actual page count will vary depending on your average type of document. The machine is supplied with a Starter toner cartridge that will need to be replaced after approximately 1,000 pages [1]. When a toner cartridge is running low, the LCD shows `Toner Low`.

[1] Approx. cartridge yield is declared in accordance with ISO/IEC 19798.

Note

- It is a good idea to keep a new toner cartridge ready for use when you see the `Toner Low` warning.
- To ensure high quality printing, we recommend that use only Genuine Brother Brand toner cartridges. When you want to buy toner cartridges, please call your Brother dealer.
- We recommend that you clean the machine when you replace the toner cartridge. See *Routine maintenance* on page 155.
- If you change the print density setting for lighter or darker printing, the amount of toner used will change.
- Wait to unpack the toner cartridge until immediately before you put it into the machine.

Toner Low message

```
Toner Low
Prepare...
```

If the LCD shows `Toner Low Prepare New X Toner Cartridge.`, the machine has nearly run out of toner. Buy a new toner cartridge and have it ready before you get a `Replace Toner` message. The LCD shows the toner colour that is near the end of its life (Black, Yellow, Magenta or Cyan).

Replace Toner message

When the following message appears on the LCD, you need to replace the toner cartridge:

```
Replace Toner
```

The scrolling message on the LCD indicates which colour you need to replace.

1. Turn off the machine. Unplug the telephone line cord first, and then unplug the power cord from the electrical socket.

2 Fully open the top cover by lifting up on the handle (1).

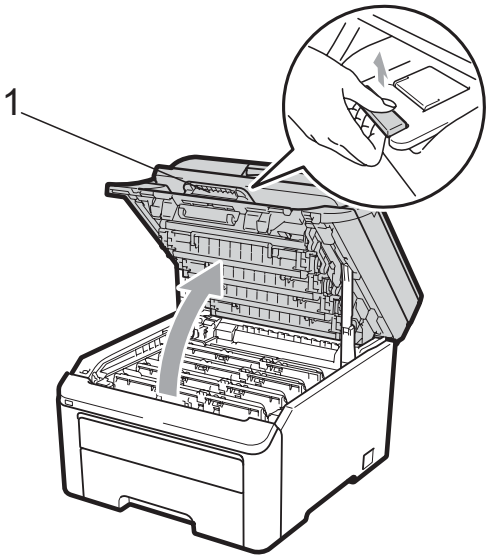

IMPORTANT

When the scanner is open, you cannot open the top cover.

3 Take out the drum unit and toner cartridge assembly for the colour shown on the LCD.

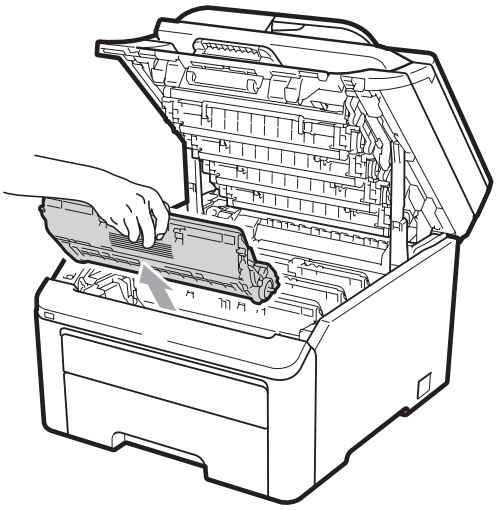

4 Push down the green-labelled lock lever (1) and take the toner cartridge out of the drum unit.

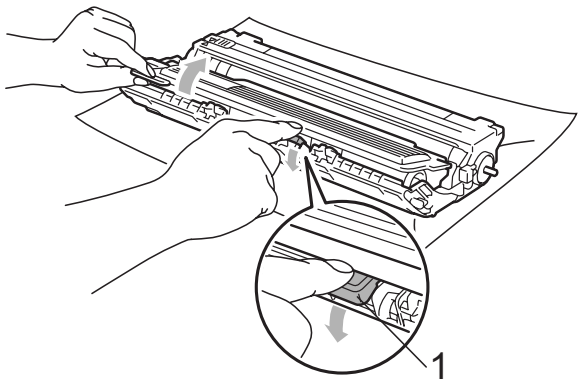

WARNING

DO NOT put a toner cartridge into a fire. It could explode, resulting in injuries.

DO NOT use cleaning materials that contain ammonia, alcohol, any type of spray or any type of flammable substance to clean the inside or outside of the machine. Doing this may cause a fire or electrical shock. See *Routine maintenance* on page 155 for how to clean the machine.

Be careful not to inhale toner.

IMPORTANT

- We recommend that you place the drum unit and toner cartridge assembly on a clean, flat, level, stable surface with a sheet of disposable paper or cloth underneath it in case you accidentally spill or scatter toner.
- To prevent damage to the machine from static electricity, DO NOT touch the electrodes shown in the illustration.

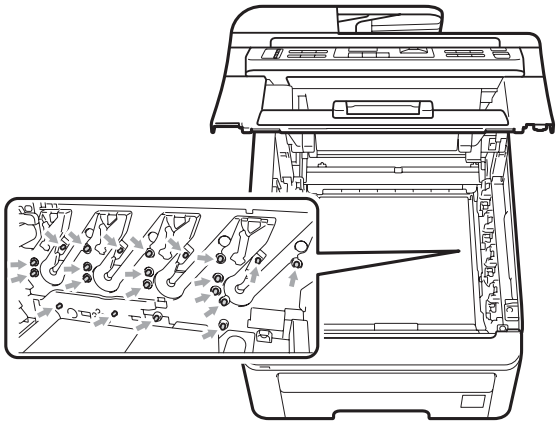

- Handle the toner cartridge carefully. If toner scatters on your hands or clothes, wipe or wash it off with cold water at once.
- To avoid print quality problems, DO NOT touch the shaded parts shown in the illustrations.

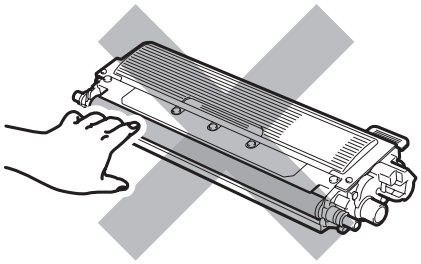

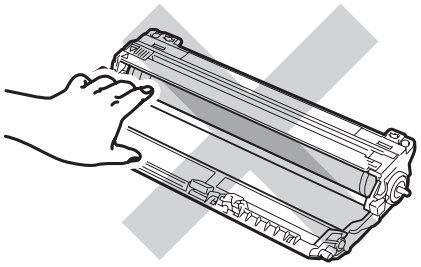

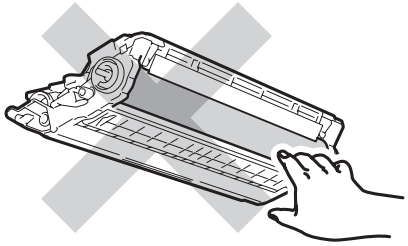

Note

- Be sure to seal up the toner cartridge tightly in a suitable bag so that toner powder does not spill out of the cartridge.
- Discard used consumable items according to local regulations. If you choose not to return your used consumable, please discard the used consumable according to local regulations, keeping it separate from domestic waste. If you have questions, call your local waste disposal office.

5 Clean the primary corona wire inside the drum unit by gently sliding the green tab from left to right and right to left several times.

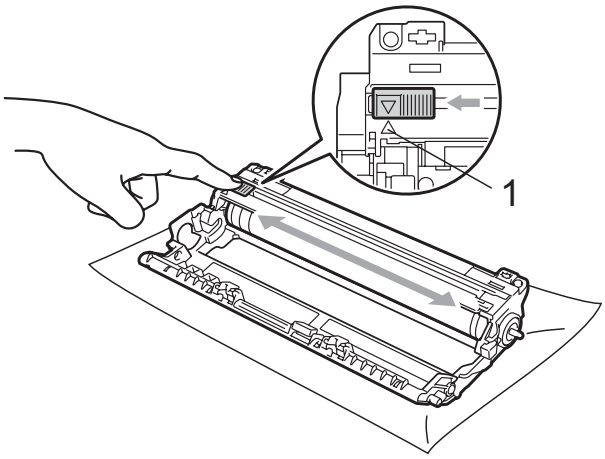

Note

Be sure to return the tab to the home position (▲) (1). If you do not, printed pages may have a vertical stripe.

6 Unpack the new toner cartridge. Gently shake it from side to side several times to distribute the toner evenly inside the cartridge.

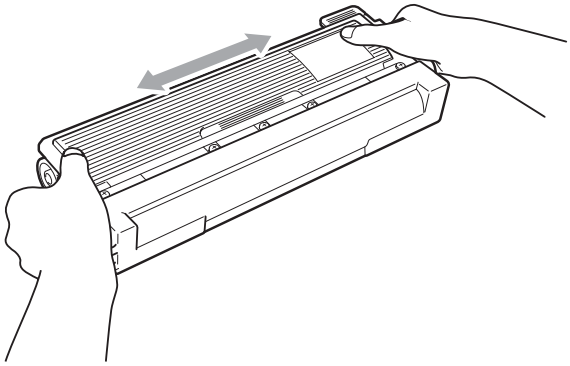

IMPORTANT

- Unpack the toner cartridge just before you put it in the machine. If a toner cartridge is left unpacked for a long time, the toner life will be shortened.
- If an unpacked drum unit is put in direct sunlight or room light, the unit may be damaged.

CAUTION

HOT SURFACE

Put the toner cartridge in the drum unit immediately after you have removed the protective cover. To prevent any degradation to the print quality, DO NOT touch the shaded parts shown in the illustrations.

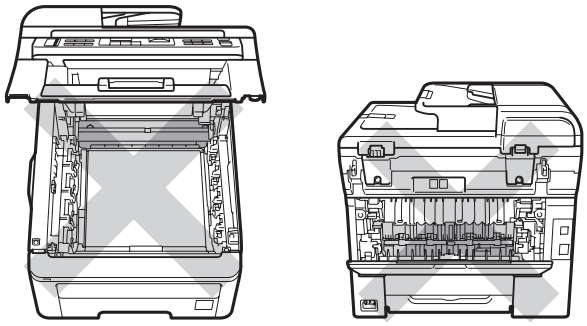

IMPORTANT

Brother machines are designed to work with toner of a particular specification and will work to a level of optimum performance when used with genuine Brother toner cartridges (TN-240BK/TN-240C/TN-240M/TN-240Y). Brother cannot guarantee this optimum performance if toner or toner cartridges of other specifications are used. Brother does not therefore recommend the use of cartridges other than genuine Brother cartridges with this machine, or the refilling of empty cartridges with toner from other sources. If damage is caused to the drum unit or other part of this machine as a result of the use of toner or toner cartridges other than genuine Brother products due to the incompatibility or lack of suitability of those products with this machine, any repairs required as a result may not be covered by the warranty.

7 Pull off the protective cover.

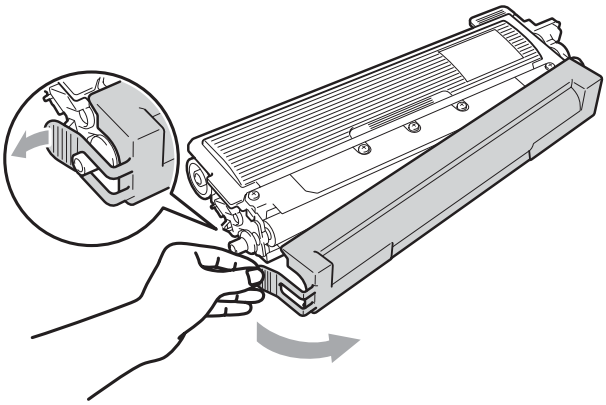

8 Put the new toner cartridge firmly into the drum unit until you hear it lock into place.

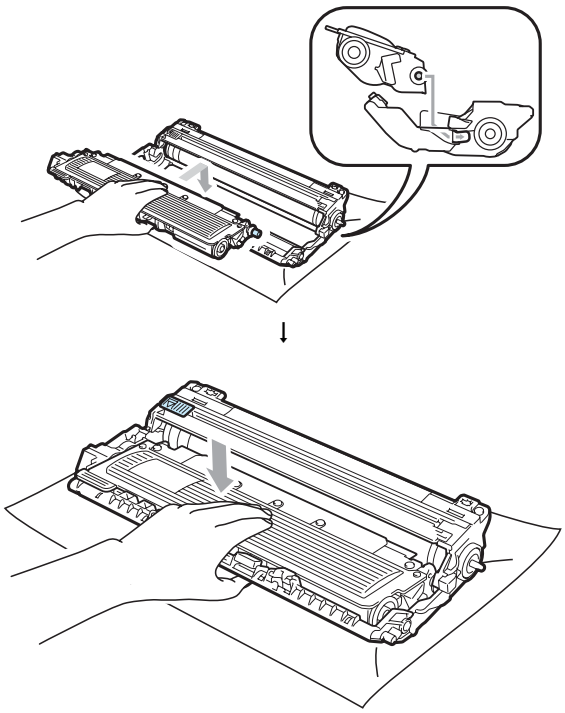

Note

Make sure that you put in the toner cartridge correctly or it may separate from the drum unit.

9 Slide the drum unit and toner cartridge assembly into the machine. Make sure that you match the toner cartridge colour to the same colour label on the machine.

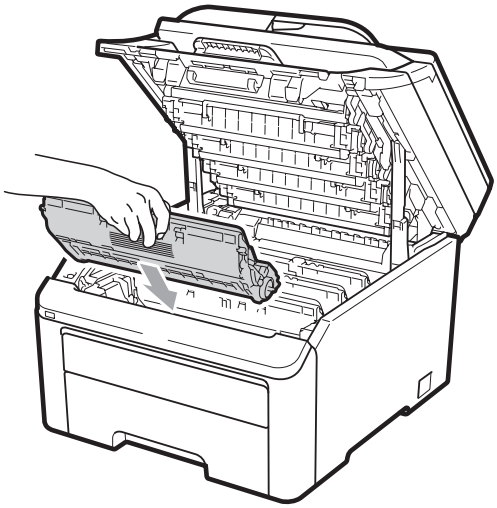

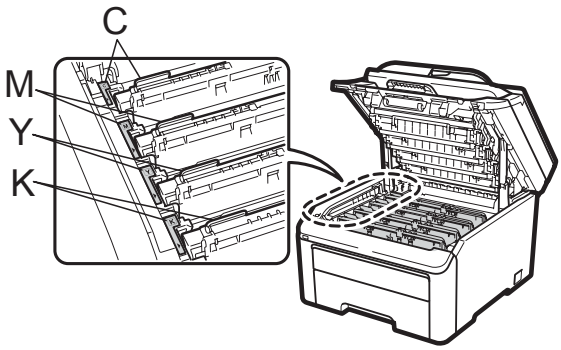

C-Cyan M-Magenta Y-Yellow K-Black

10 Close the top cover of the machine.

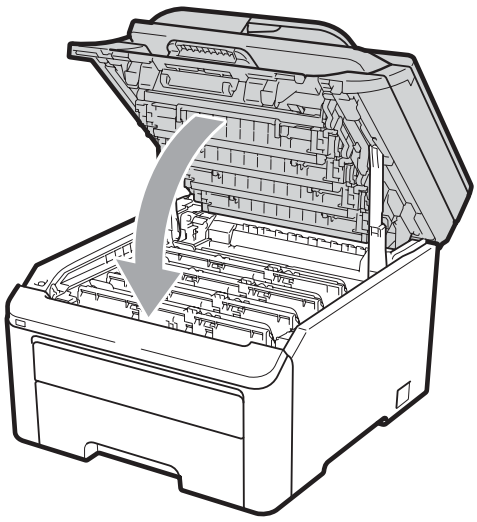

11 Plug the machine's power cord back into the electrical socket first, and reconnect all cables and the telephone line cord. Turn on the machine.

Note

DO NOT turn off the machine or open the top cover until the LCD returns to the Ready mode.

IMPORTANT

While removing the drum unit, handle it carefully because it may contain toner. If toner scatters on your hands or clothes, wipe or wash it off with cold water at once.

Drum units

A new drum kit (model no. DR-240CL) can print approximately 15,000 A4 or Letter size single-sided pages. The DR-240CL drum kit contains 4 drum units - 1 Black (DR-240CL-BK) and 3 Color (DR-240CL-CMY). As the drums rotate in unison during the various stages of operation (even if you are only printing in one colour) and because damage to a single drum unit is not likely, you will need to replace all of the drums at once. We have no control over the many factors that determine the actual drum life, therefore we cannot guarantee a minimum number of pages that will be printed by your drum. The printer should be used only in a clean, dust-free environment with adequate ventilation. Drum wear and tear occurs due to use and rotation of the drum and interaction with paper, toner and other materials in the paper path.

When a drum reaches the factory-established rotation limit corresponding to the rated page yield, the product LCD display will advise you to replace the applicable drum(s). The product will continue to function, however, print quality may not be optimal.

Drum End Soon messages

```
Drums End Soon
```

If the LCD shows `Drums End Soon`, it means the drum kit is near the end of its life. Buy a new drum kit (DR-240CL) and have it ready before you get a Replace Drums message. To replace the drum units, see *Replacing the drum units* on page 174.

IMPORTANT

For best performance, use only Genuine Brother drum units and Genuine Brother toner units. Printing with a third-party drum unit or toner unit may reduce not only the print quality but also the quality and life of the printer itself. Warranty coverage may not apply to problems caused by the use of a third-party drum unit or toner unit.

Note

```
Drum End Soon(X)
```

If only a specified drum is near the end of its life, the LCD shows the `Drum End Soon(X)` message. (X) indicates the drum unit colour that is near the end of its life. ((K) =Black, (Y)=Yellow, (M)=Magenta, (C)=Cyan). Call your Brother dealer to buy a new drum unit DR-240CL-BK (for Black) or a DR-240CL-CMY (for either Y, M, C colours) and have it ready before you get a `Replace Drums` message. During the normal lifespan of a drum kit the `Drum End Soon(X)` message will not appear. The message will only refer to a specific drum if a single unit has been replaced previously due to damage or error.

Replace Drums messages

When the following message appears on the LCD, you need to replace the drum kit:

```
Replace Drums
```

```
Drum Error
```

<Scrolling message>

`Replace the Drum Unit. Black/ Cyan/ Magenta/ Yellow. Refer to the User's Guide.` [1]

[1] Only the colour you need to replace will be shown

The Drum Error message has two cases: If the scrolling message shows `Replace the Drum Unit.` you will need to replace the drum unit. If the scrolling message shows `Slide the Green tab on Drum Unit.` you do not need to replace the drum unit, you just need to clean the corona wires. (See *Cleaning the corona wires* on page 158.)

IMPORTANT

For best performance, use only Genuine Brother drum units and Genuine Brother toner units. Printing with a third-party drum unit or toner unit may reduce not only the print quality but also the quality and life of the printer itself. Warranty coverage may not apply to problems caused by the use of a third-party drum unit or toner unit.

Note

If only the specified drum needs to be replaced, the LCD shows the `Replace Drum(X)` message. (X) indicates the drum unit colour that you need to replace. ((K)=Black, (Y)=Yellow, (M)=Magenta, (C)=Cyan). During the normal lifespan of a drum kit the Replace Drum (X) message will not appear. The message will only refer to a specific drum if a single unit has been replaced previously due to damage or error.

Replacing the drum units

IMPORTANT

- While removing the drum unit, handle it carefully because it may contain toner. If toner scatters on your hands or clothes, wipe or wash it off with cold water at once.
- Every time you replace the drum unit, clean the inside of the printer. (See *Routine maintenance* on page 155.)

1. Turn off the machine. Unplug the telephone line cord first, and then unplug the power cord from the electrical socket.
2. Fully open the top cover by lifting up on the handle (1).

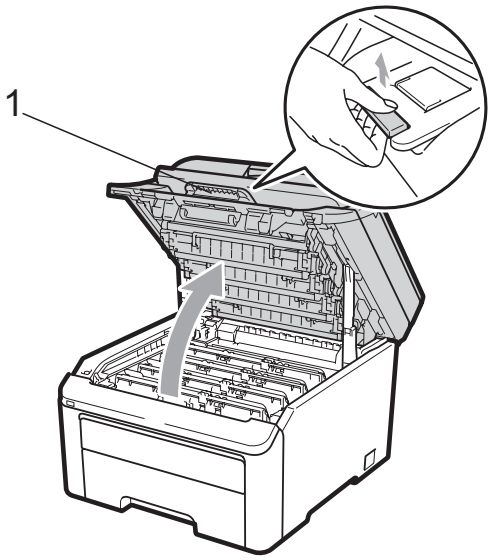

IMPORTANT

When the scanner is open, you cannot open the top cover.

3 Take out the drum unit and toner cartridge assembly for the colour shown on the LCD.

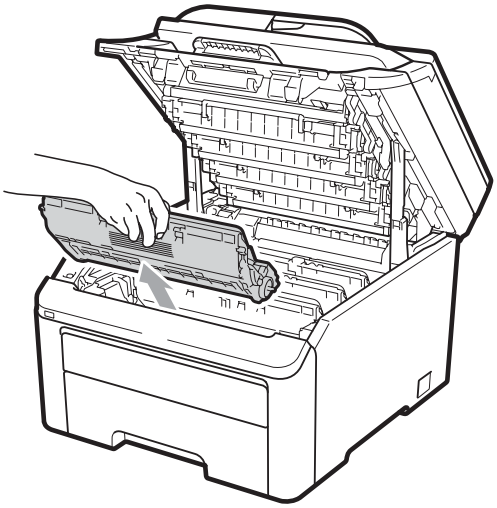

4 Push down the green-labeled lock lever (1) and take the toner cartridge out of the drum unit.

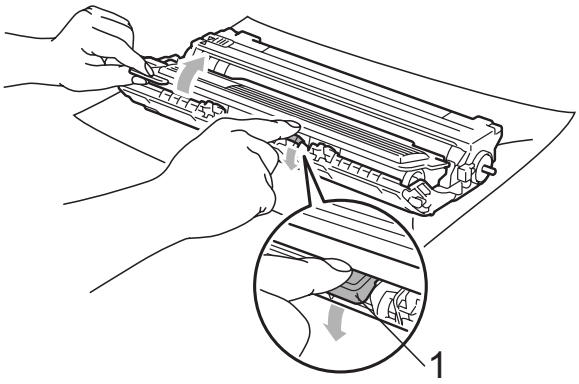

WARNING

DO NOT put a toner cartridge into a fire. It could explode, resulting in injuries.

DO NOT use cleaning materials that contain ammonia, alcohol, any type of spray, or any type of flammable substance to clean the outside or inside of the machine. Doing this may cause a fire or electrical shock. See *Routine maintenance* on page 155 for how to clean the machine.

Be careful not to inhale toner.

IMPORTANT

- We recommend that you place the drum unit and toner cartridge assembly on a clean, flat surface with a sheet of disposable paper or cloth underneath it in case you accidentally spill or scatter toner.
- To prevent damage to the machine from static electricity, DO NOT touch the electrodes shown in the illustration.

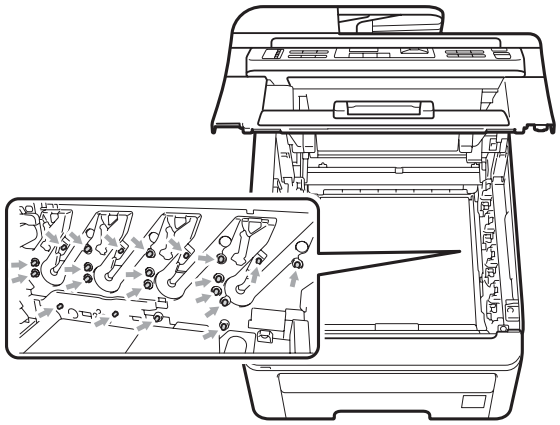

- Handle the toner cartridge carefully. If toner scatters on your hands or clothes, wipe or wash it off with cold water at once.

- To avoid print quality problems, DO NOT touch the shaded parts shown in the illustrations.

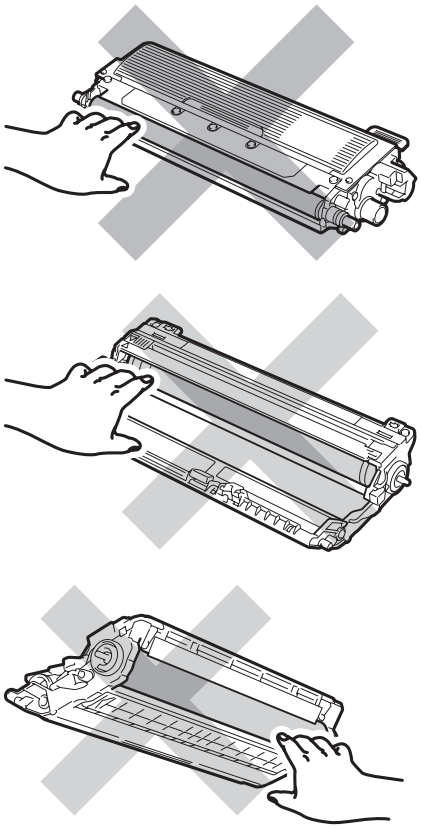

Note

- Be sure to seal up the toner cartridge tightly in a suitable bag so that toner powder does not spill out of the cartridge.
- Discard used consumable items according to local regulations. If you choose not to return your used consumable, please discard the used consumable according to local regulations, keeping it separate from domestic waste. If you have questions, call your local waste disposal office.

5 Unpack the new drum unit and remove the protective cover.

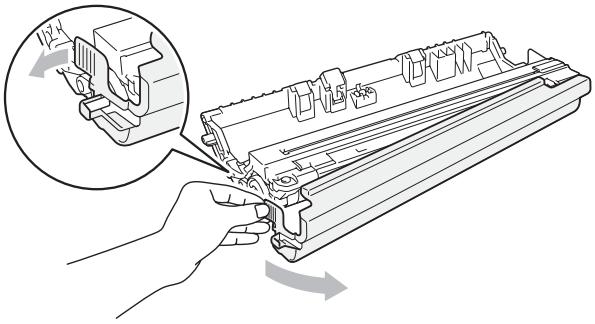

IMPORTANT

Unpack the drum unit just before you put it in the machine. Exposure to direct sunlight or room light may damage the drum unit.

6 Put the toner cartridge firmly into the new drum unit until you hear it lock into place.

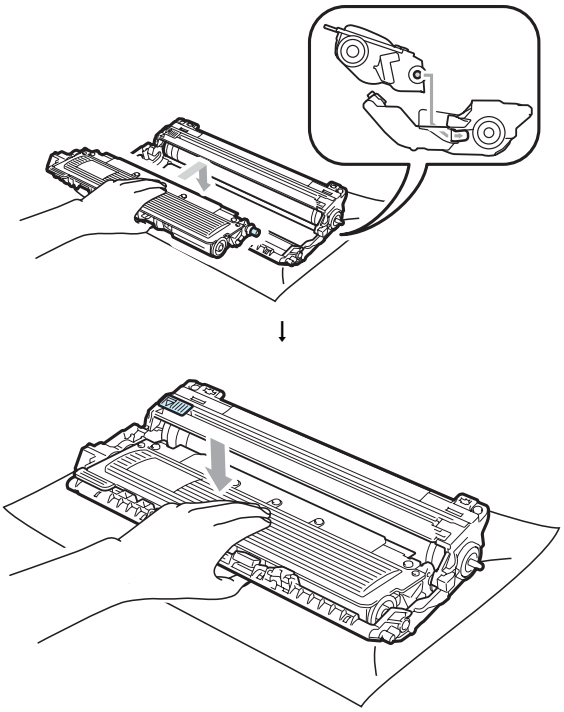

IMPORTANT

Make sure that you put in the toner cartridge correctly or it may separate from the drum unit.

7 Slide the drum unit and toner cartridge assembly into the machine. Make sure that you match the toner cartridge colour to the same colour label on the machine.

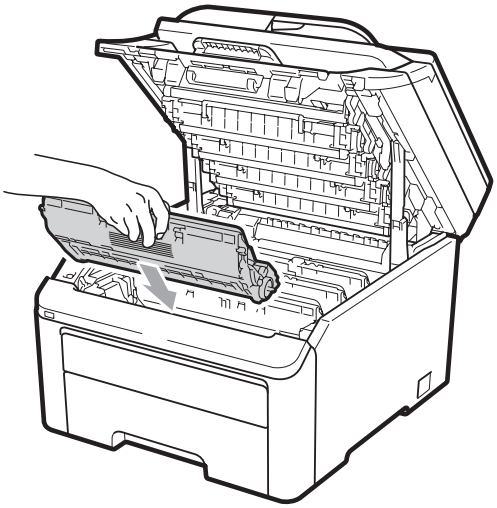

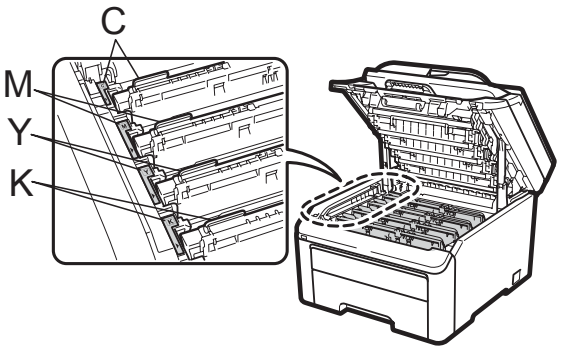

C-Cyan M-Magenta Y-Yellow K-Black

8 Close the top cover of the machine.

Resetting the drum counter

When you replace a drum unit with a new one, you need to reset the drum counter by completing the following steps:

1 Plug the machine's power cord back into the electrical socket first, and reconnect all cables and telephone line cord. Turn on the machine.

2 (For MFC-9320CW) Press **Menu**, **8**, **4**.
(For MFC-9120CN) Press **Menu**, **6**, **4**.

3 Press ▲ or ▼ to choose the colour of the drum you replaced. Press **OK**.

4 Press **1** to reset the drum unit counter.

5 Press **Stop/Exit**.

Replacing the belt unit

Model name BU-200CL

A new belt unit can print approximately 50,000 A4 or Letter size single-sided pages.

Belt End Soon message

```
Belt End Soon
```

If the LCD shows `Belt End Soon`, it means the belt unit is near the end of its life. Buy a new belt unit and have it ready before you get a `Replace Belt` message.

Replace Belt message

When the following message appears on the LCD, you need to replace the belt unit:

```
Replace Belt
```

IMPORTANT

- DO NOT touch the surface of the belt unit. If you touch it, it could degrade print quality.
- Damage caused by incorrect handling of the belt unit may void your warranty.

1. Turn off the machine. Unplug the telephone line cord first, and then unplug the power cord from the electrical socket.

2. Fully open the top cover by lifting up on the handle (1).

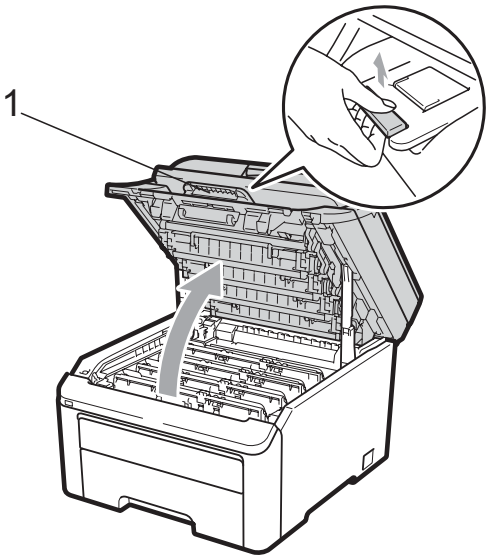

IMPORTANT

When the scanner is open, you cannot open the top cover.

3. Take out all the drum unit and toner cartridge assemblies.

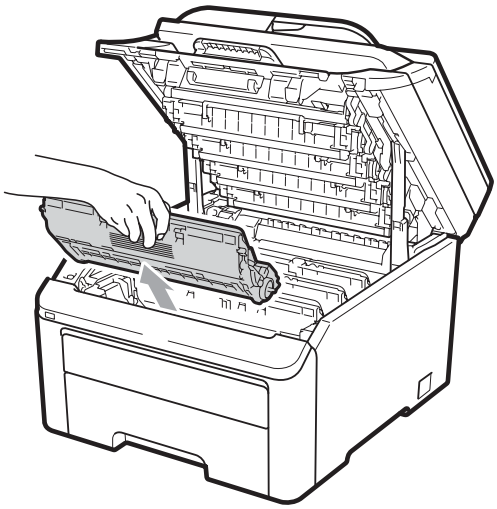

IMPORTANT

- We recommend that you place the drum unit and toner cartridge assembly on a clean, flat surface with a sheet of disposable paper or cloth underneath it in case you accidentally spill or scatter toner.
- To prevent damage to the machine from static electricity, DO NOT touch the electrodes shown in the illustration.

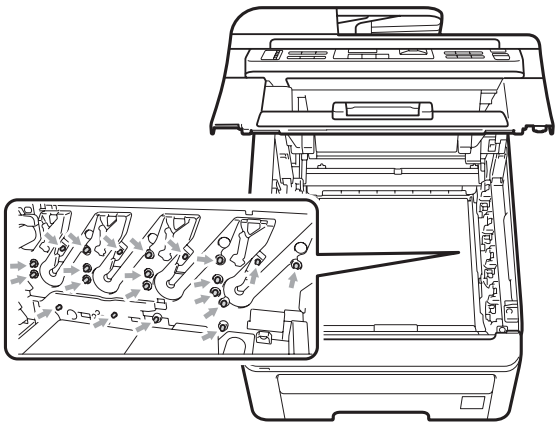

- Handle the toner cartridge carefully. If toner scatters on your hands or clothes, wipe or wash it off with cold water at once.

- To avoid print quality problems, DO NOT touch the shaded parts shown in the illustrations.

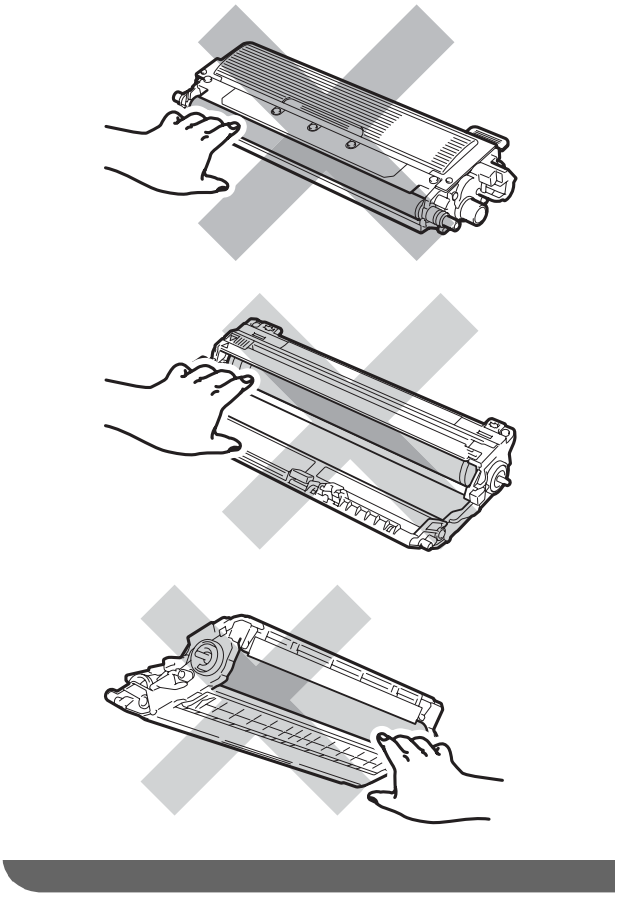

4 Hold the green handle of the belt unit and lift the belt unit up, then pull it out.

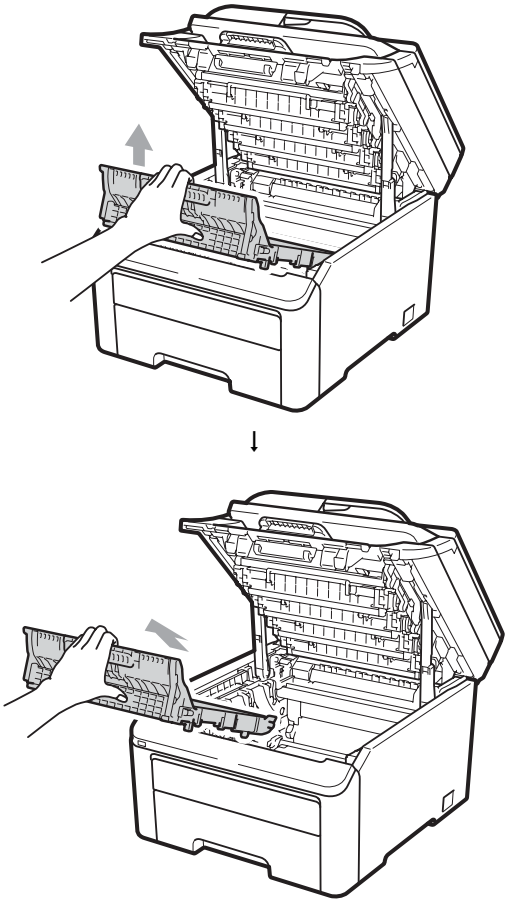

IMPORTANT

To avoid print quality problems, DO NOT touch the shaded parts shown in the illustration.

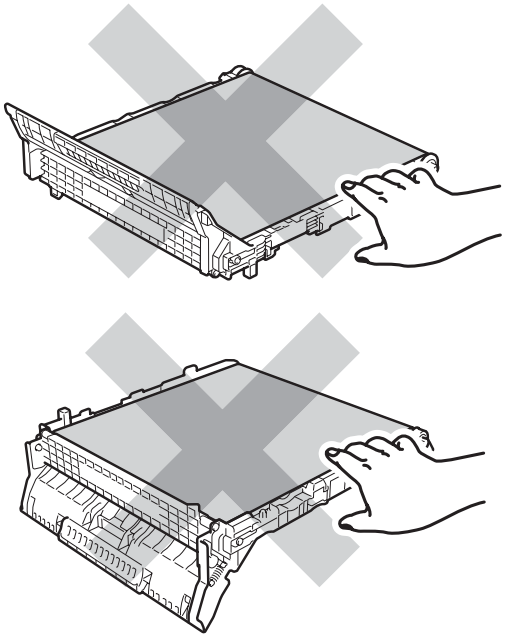

5 Unpack the new belt unit and put the new belt unit in the machine.

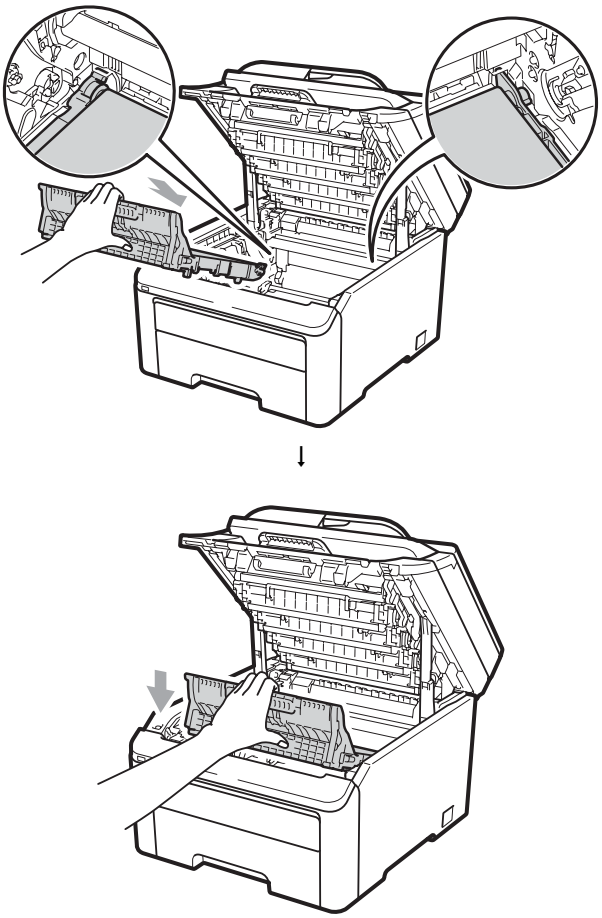

6 Slide each drum unit and toner cartridge assembly into the machine. Make sure that you match the toner cartridge colour to the same colour label on the machine. Repeat this for all the drum unit and toner cartridge assemblies.

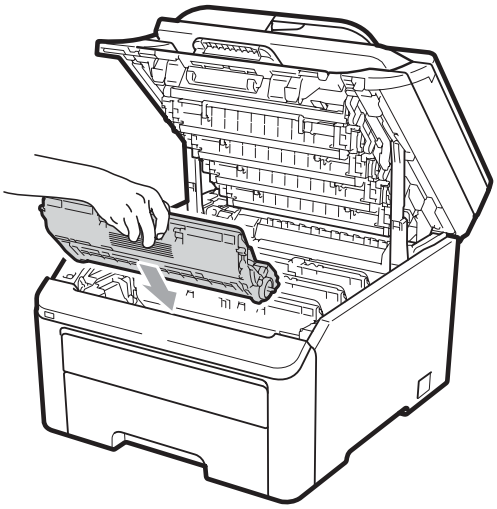

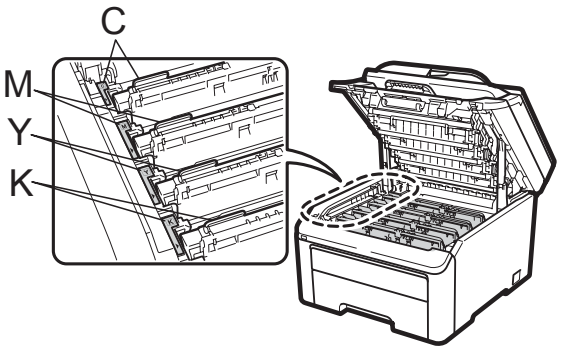

C-Cyan M-Magenta Y-Yellow K-Black

7 Close the top cover of the machine.

When you replace a belt unit with a new one, you need to reset the belt unit counter by completing the following steps:

1 Plug the machine's power cord back into the electrical socket first, and reconnect all cables and telephone line cord. Turn on the machine.

2 (For MFC-9320CW) Press **Menu**, **8**, **4**.
(For MFC-9120CN) Press **Menu**, **6**, **4**.

3 Press ▲ or ▼ to select `Belt Unit`.
Press **OK**.

4 Press **1** to reset the belt unit counter.

5 Press **Stop/Exit**.

Replacing the waste toner box

Model name WT-200CL

A new waste toner box can print approximately 50,000 A4 or Letter size single-sided pages.

WT Box End Soon message

```
WT Box End Soon
```

If the LCD shows `WT Box End Soon`, it means the waste toner box is near the end of its life. Buy a new waste toner box and have it ready before you get a `Replace WT Box` message.

Replace WT Box message

When the following message appears on the LCD, you need to replace the waste toner box:

```
Replace WT Box
```

IMPORTANT

DO NOT reuse the waste toner box.

WARNING

DO NOT put the waste toner box into a fire. It could explode.

Be careful not to spill the toner. DO NOT inhale or allow it to get into your eyes.

1. Turn off the machine. Unplug the telephone line cord first, and then unplug the power cord from the electrical socket.
2. Fully open the top cover by lifting up on the handle (1).

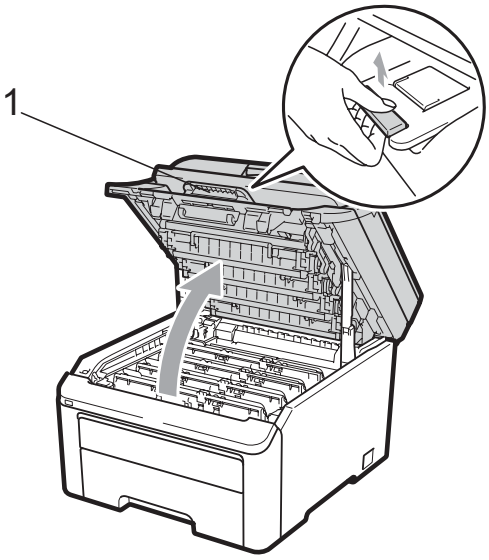

IMPORTANT

When the scanner is open, you cannot open the top cover.

3. Take out all the drum unit and toner cartridge assemblies.

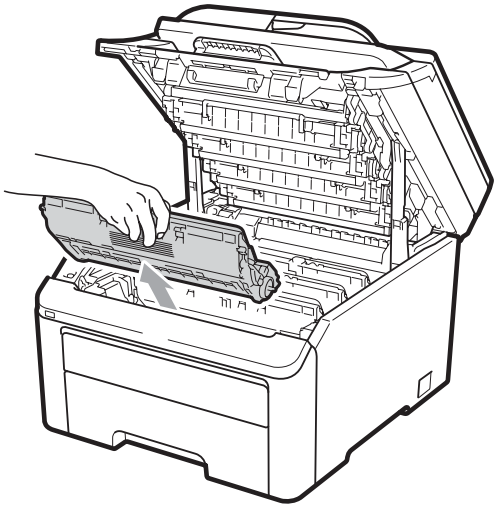

IMPORTANT

- We recommend that you place the drum unit and toner cartridge assembly on a clean, flat surface with a sheet of disposable paper or cloth underneath it in case you accidentally spill or scatter toner.
- To prevent damage to the machine from static electricity, DO NOT touch the electrodes shown in the illustration.

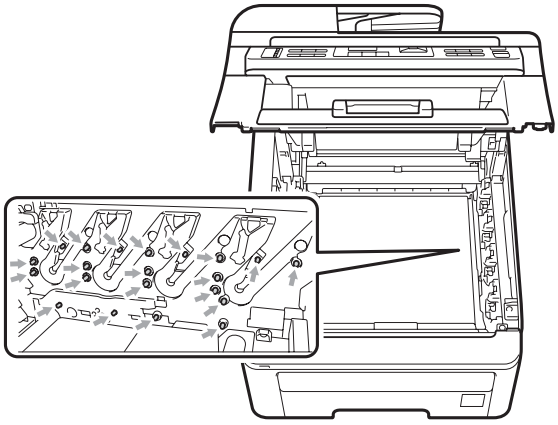

- Handle the toner cartridge carefully. If toner scatters on your hands or clothes, wipe or wash it off with cold water at once.

- To avoid print quality problems, DO NOT touch the shaded parts shown in the illustrations.

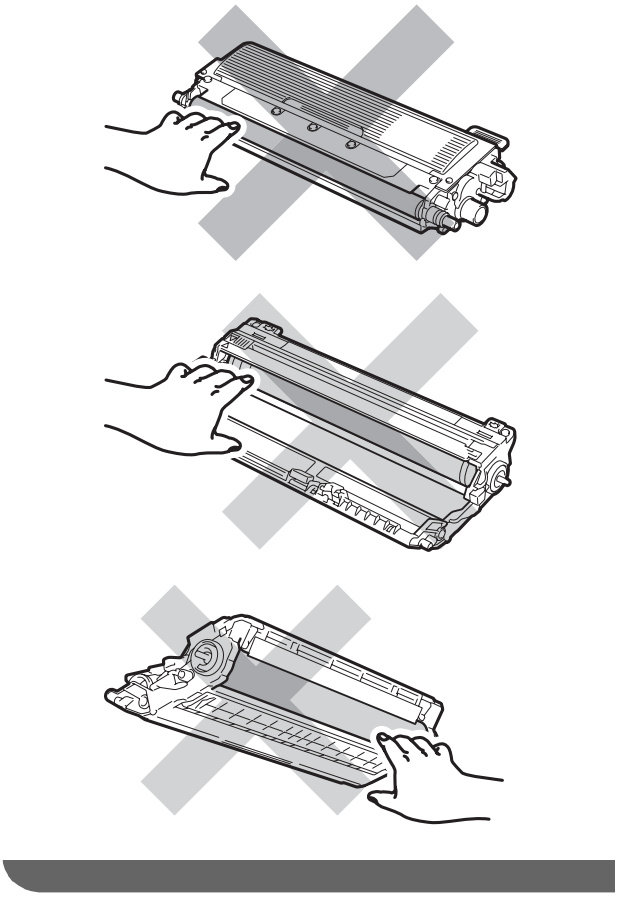

4 Hold the green handle of the belt unit and lift the belt unit up, then pull it out.

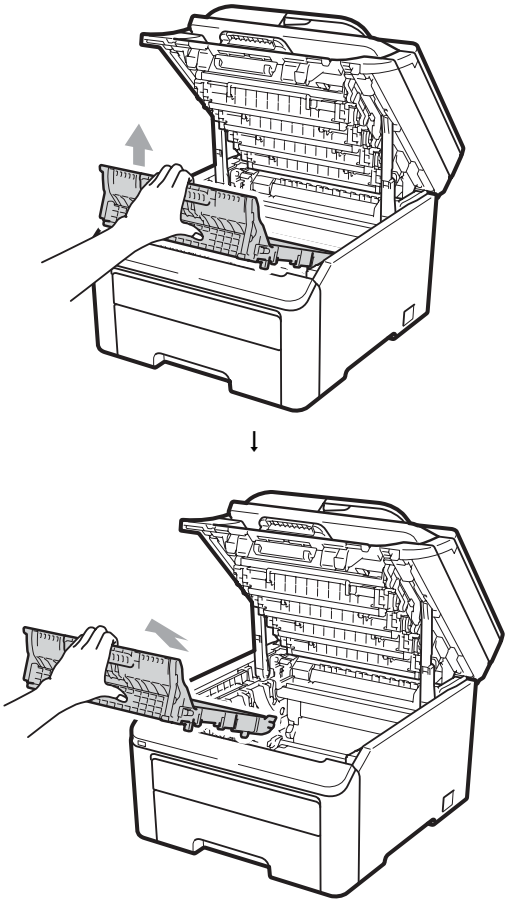

IMPORTANT

To avoid print quality problems, DO NOT touch the shaded parts shown in the illustration.

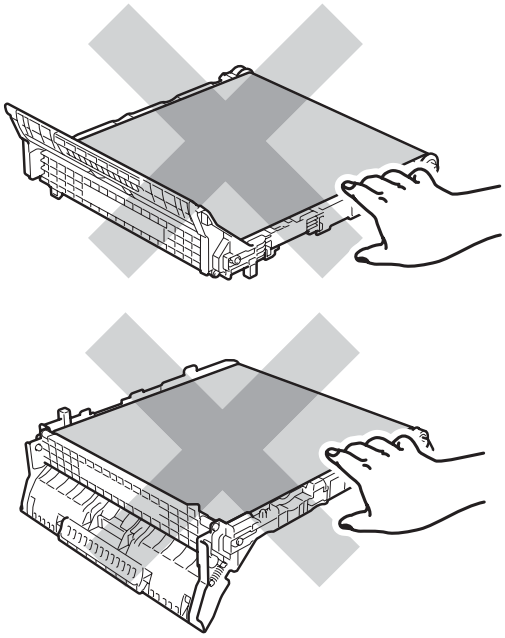

5 Remove the orange packing material and discard it.

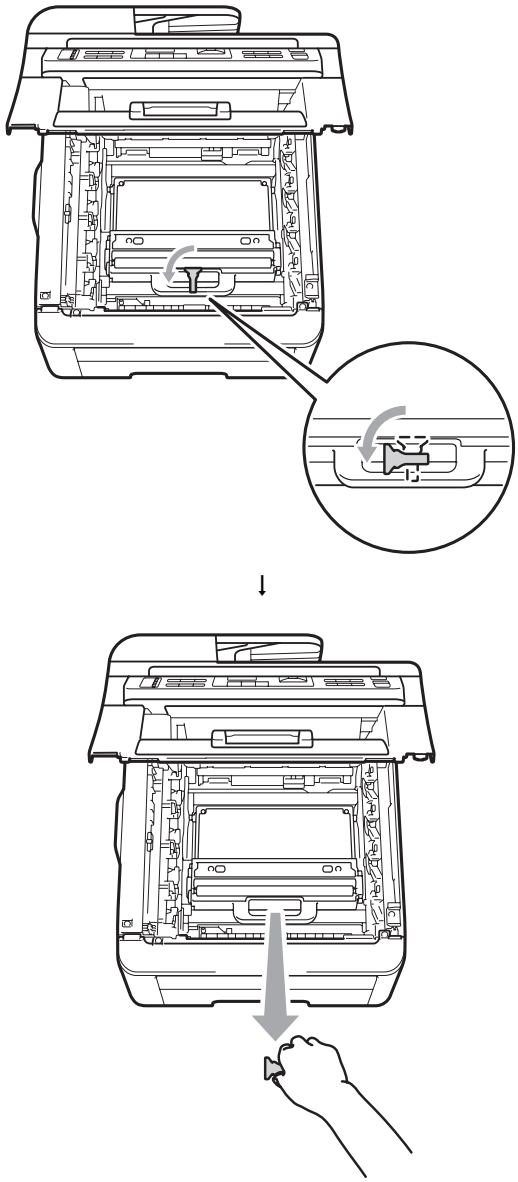

Note

This step is only necessary when you are replacing the waste toner box for the first time. The orange packing is installed at the factory to protect your machine during shipment. The orange packing is not required for replacement waste toner boxes.

6 Hold the green handle of the waste toner box and remove the waste toner box from the machine.

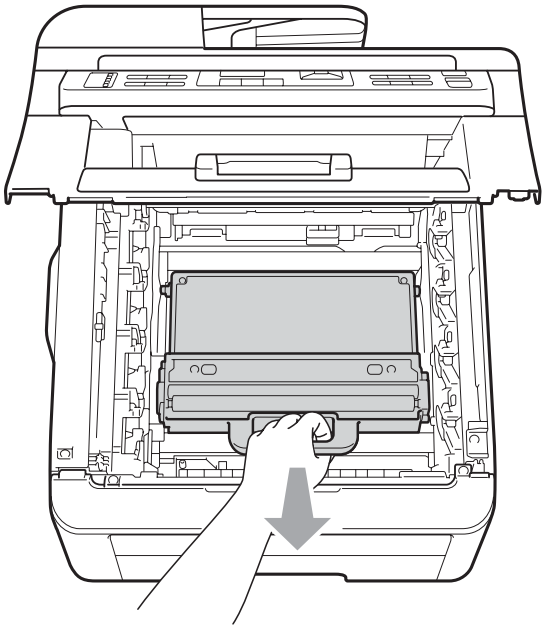

CAUTION

Handle the waste toner box carefully in case you accidentally spill or scatter toner. If toner scatters on your hands or clothes, wipe or wash it off with cold water at once.

Note

Discard the used waste toner box according to local regulations, keeping it separate from domestic waste. If you have questions, call your local waste disposal office.

7 Unpack the new waste toner box and put it in the machine.

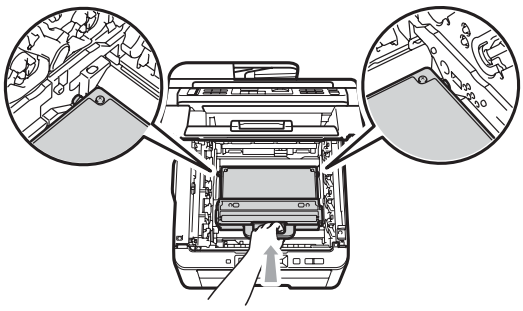

8 Put the belt unit in the machine.

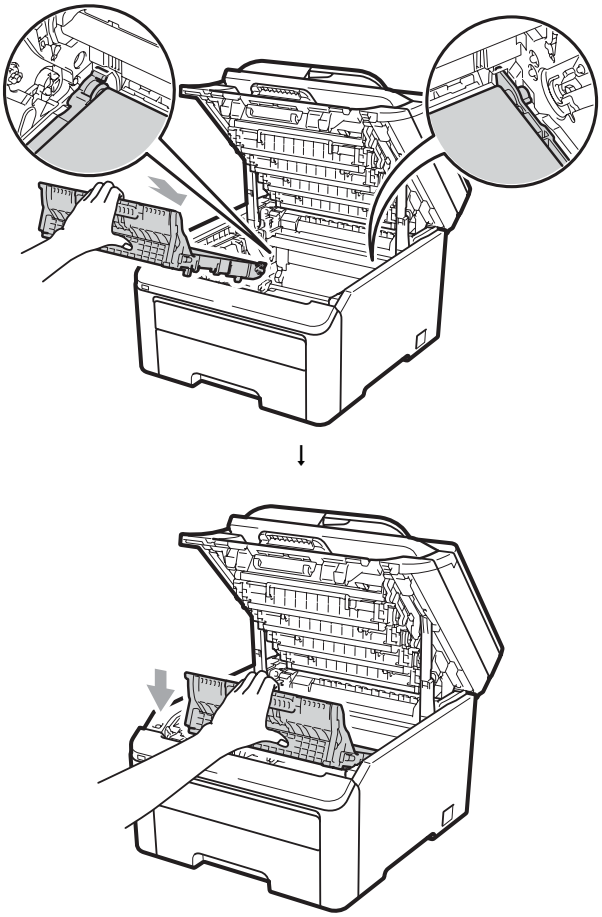

C

9 Slide each drum unit and toner cartridge assembly into the machine. Make sure that you match the toner cartridge colour to the same colour label on the machine. Repeat this for all the drum unit and toner cartridge assemblies.

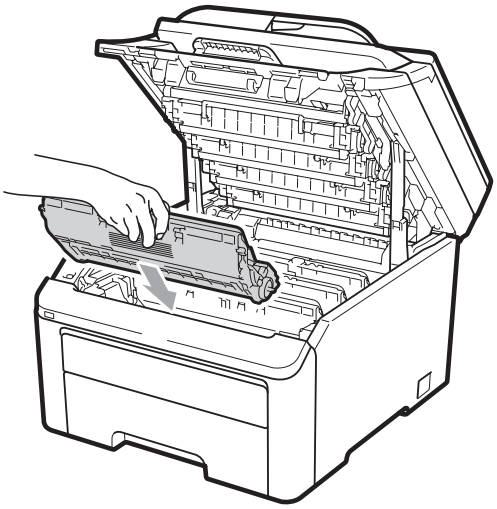

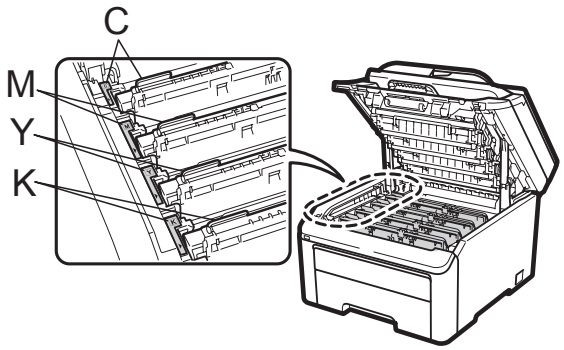

C-Cyan M-Magenta Y-Yellow K-Black

10 Close the top cover of the machine.

Replacing periodic maintenance parts

The periodic maintenance parts will need to be replaced regularly to maintain the print quality. The parts listed below will have to be replaced after printing approximately 50,000 pages [1]. Please call your Brother dealer when the following messages appear on the LCD.

[1] A4 or Letter size single-sided pages.

LCD message	Description
`Replace PF Kit`	Replace the paper feeding kit for the paper tray.
`Replace Fuser`	Replace the fuser unit.

Machine Information

Checking the Serial Number

You can see the machine's Serial Number on the LCD.

1. (For MFC-9320CW) Press **Menu**, **8**, **1**.
   (For MFC-9120CN) Press **Menu**, **6**, **1**.
2. Press **Stop/Exit**.

Checking the Page Counters

You can see the machine's Page Counters for copies, printed pages, reports and lists, faxes or a summary total.

1. (For MFC-9320CW) Press **Menu**, **8**, **2**.
   (For MFC-9120CN) Press **Menu**, **6**, **2**.
2. Press ▲ or ▼ to see `Total`, `Fax/List`, `Copy` or `Print`.
3. Press **Stop/Exit**.

Checking the remaining life of parts

You can see the machine's parts life on the LCD.

1. (For MFC-9320CW) Press **Menu**, **8**, **3**.
   (For MFC-9120CN) Press **Menu**, **6**, **3**.

   ```
   Machine Info.
   3.Parts Life
   ```

2. Press ▲ or ▼ to choose `1.Drum`, `2.Belt Unit`, `3.PF Kit` or `4.Fuser`.
   Press **OK**.
3. Press **Stop/Exit**.

Reset Functions

The following reset functions are available:

1 `Network`

You can reset the print server back to its default factory settings such as the password and IP address information.

2 `Address & Fax`

Address & Fax resets the following settings:

- Address Book

  (One Touch Dial/Speed Dial/Setup Groups)
- Programmed fax jobs in the memory

  (Polled TX, Delayed Fax)
- Station ID

  (name and number)
- Coverpage Msg

  (comments)
- Remote Fax Option

  (Remote Access Code, Fax Storage, Fax Forwarding and PC-Fax)
- Report settings

  (Transmission Verification Report/Tel Index List/Fax Journal)
- Setting Lock password

3 `All Settings`

You can reset all the machine settings back to the settings that were set at the factory.

Brother strongly recommends you perform this operation when you dispose of the machine.

Note

Unplug the interface cable before you choose `Network` or `All Settings`.

C

How to reset the machine

1. (for New Zealand) Press **Menu**, **0**, **6**.
   Press **Menu**, **0**, **7**.

   ```
   Initial Setup
   7.Reset
   ```

2. Press ▲ or ▼ to choose the reset function you want to use.
   Press **OK**.

3. Do one of the following;
   - To reset the settings, press **1** and go to step ❹.
   - To exit without making changes, press **2** and go to step ❺.

4. You will be asked to reboot the machine. Do one of the following;
   - To reboot the machine press **1**. The machine will begin the reset.
   - To exit without rebooting the machine, press **2**. Go to step ❺.

5. Press **Stop/Exit**.

Note

You can also reset the Network settings by pressing **Menu**, **7**, **0** (for MFC-9320CW) or **Menu**, **5**, **0** (for MFC-9120CN).

Packing and shipping the machine

When you transport the machine, use the packing materials that came with your machine. If you do not pack the machine correctly, you could void your warranty.

⚠ CAUTION

When shipping the machine, each drum unit / toner cartridge assembly and the waste toner box must be removed from the machine and put in a plastic bag. Failure to remove these items and put them in plastic bags before shipping may cause severe damage to the machine and may void the warranty.

Make sure that you have the following parts for repacking:

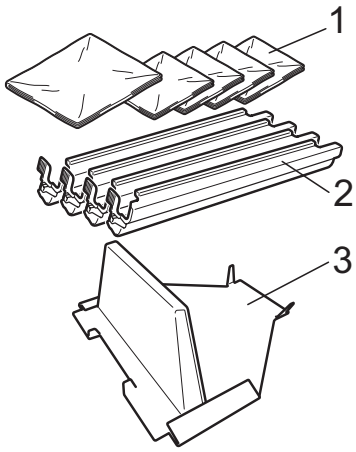

1 **Plastic bags – to be supplied by you, the user; one for the waste toner box, and one each for the four drum and toner cartridge assemblies**

2 **Protective covers that were attached to the original drum and toner cartridge assemblies**

3 **Packing material for locking the belt unit**

WARNING

This machine is heavy and weighs approximately 22.9 kg. To prevent injuries use at least two people to lift the machine. Be careful not to pinch your fingers when you put the machine back down.

IMPORTANT

Make sure that the machine has fully cooled down by leaving it disconnected from the power for at least 30 minutes before packing.

1. Turn off the machine.
2. Unplug the machine from the telephone wall socket.
3. Unplug all the cables and AC power cord from the machine.
4. Fully open the top cover and take out all the drum unit and toner cartridge assemblies.

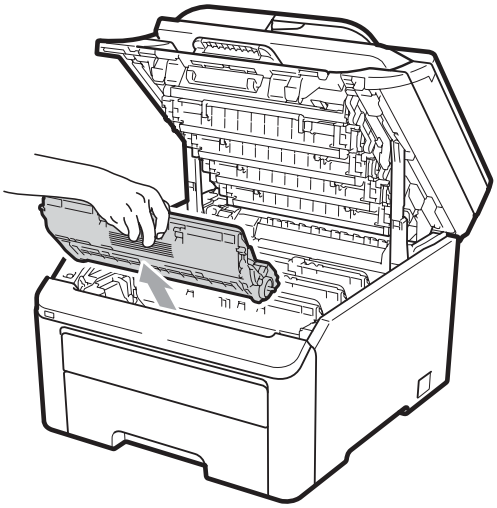

CAUTION

DO NOT touch the shaded parts shown in the illustration.

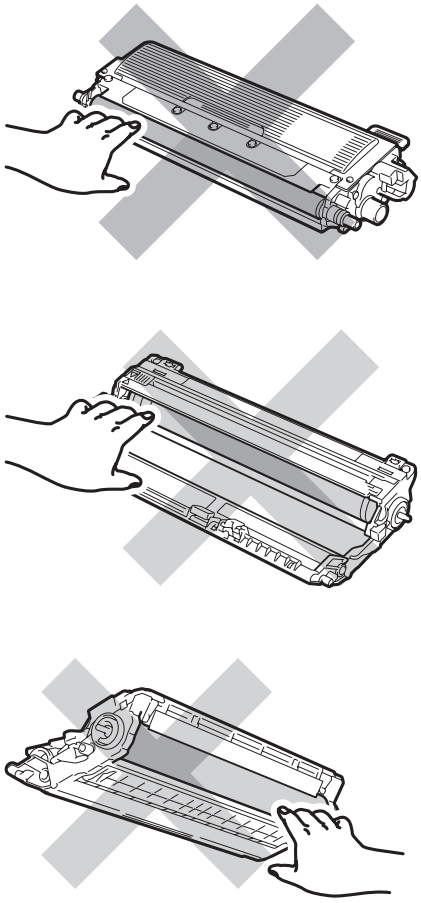

5 Attach the protective cover to each of the drum unit and toner cartridge assemblies.

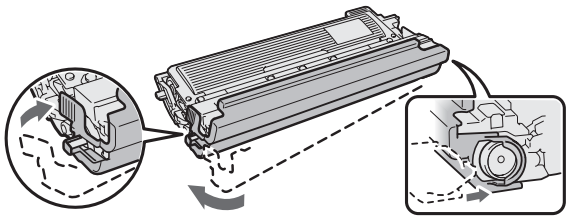

6 Put each assembly into a plastic bag and completely seal each bag.

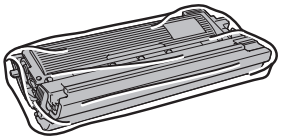

7 Remove the belt unit by holding the green handle and lifting the belt unit up and out of the machine.

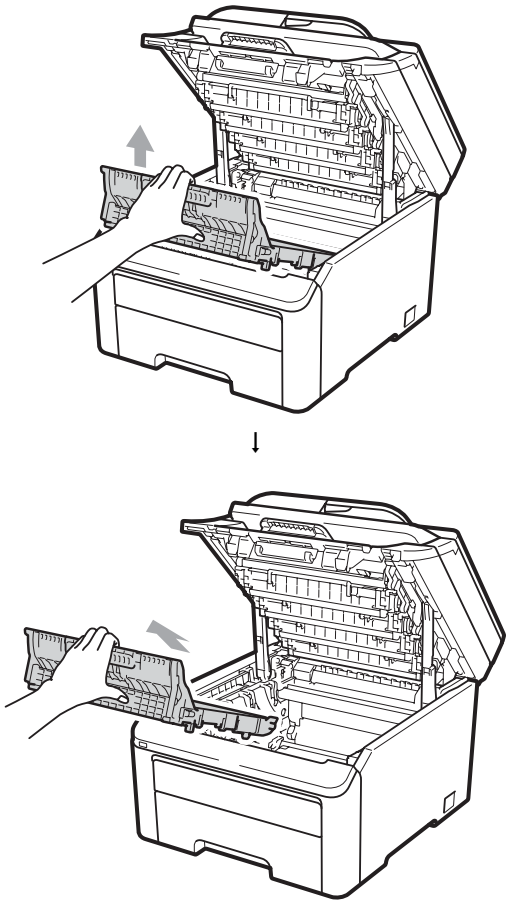

8 Remove the waste toner box from the machine, and then put it in a plastic bag and seal the bag completely.

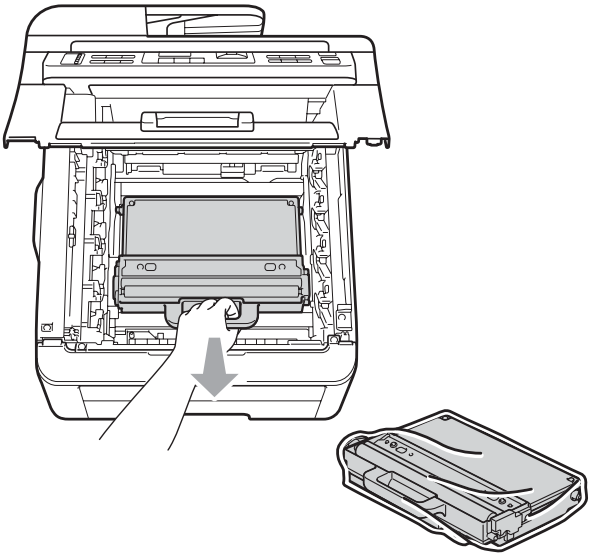

9 Reinstall the belt unit back in the machine.

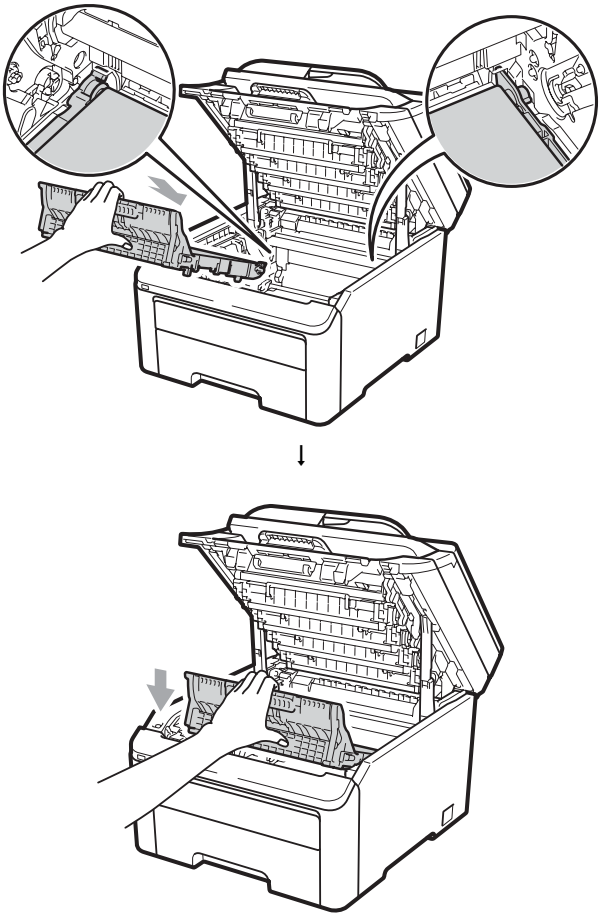

10 Reinstall the original packing material into the machine.

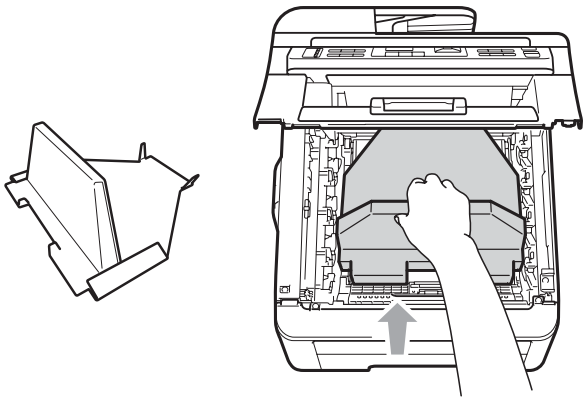

11 Close the top cover.

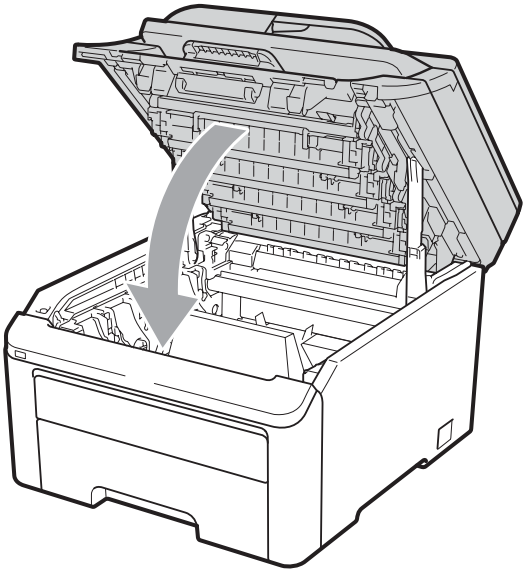

12 Put the waste toner box and one drum unit and toner cartridges assembly in the Styrofoam piece.

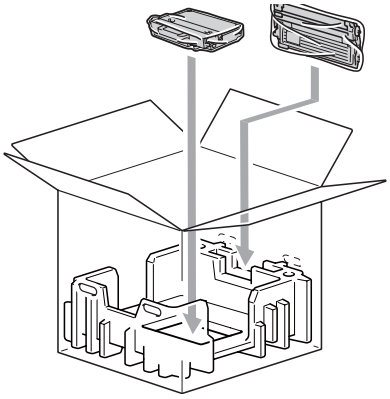

13 Using two people, place the machine into the plastic bag.

14 Put the machine and the Styrofoam pieces into the carton. Match the front side of the machine to the “FRONT” mark on the Styrofoam pieces. Put the Styrofoam pieces for the drum unit and toner cartridge assemblies on the top of the machine.

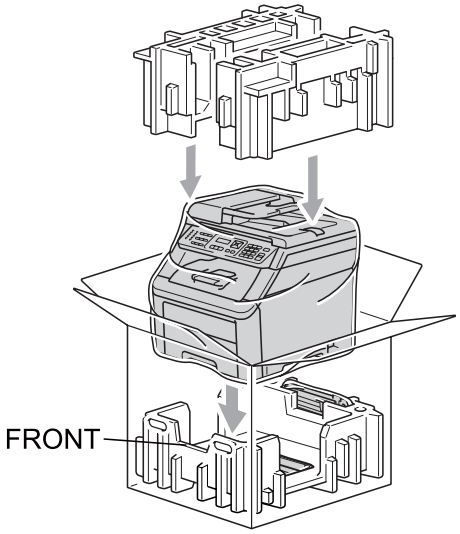

15 Put the power cord, and the three remaining drum unit and toner cartridge assemblies into the Styrofoam pieces as shown in the illustration.

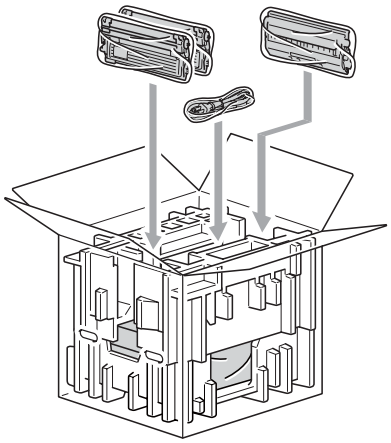

16 Put the four carton trays on the top.

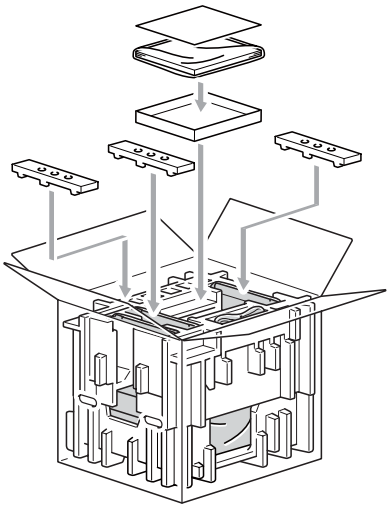

17 Close the carton and tape it shut.

D Menu and features

On-screen programming

Your machine has been designed to be easy to use. The LCD provides on-screen programming using the menu keys.

We have created step by step on-screen instructions to help you program your machine. Simply follow the steps as they guide you through the menu selections and programming options.

Menu table

You can program your machine by using the *Menu table* on page 195. These pages list the menu selections and options.

Press **Menu** followed by the menu numbers to program your machine.

For example, to set `Beeper` volume to `Low`:

1. Press **Menu**, **1**, **3**, **2**.
2. Press ▲ or ▼ to choose `Low`.
3. Press **OK**.

Memory storage

Your menu settings are stored permanently, and in the event of a power failure will *not* be lost. Temporary settings (for example, Contrast, Overseas Mode) *will* be lost. The machine can store the date and time up to 60 hours.

Menu keys

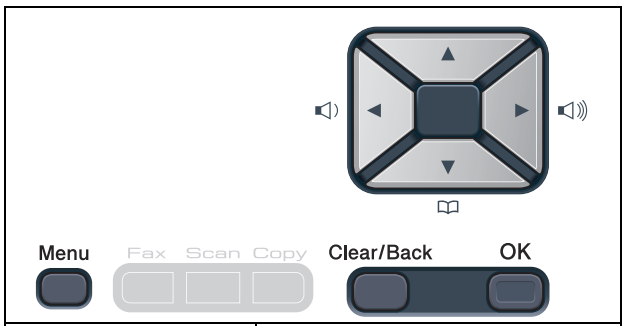

Menu	Access the menu.
OK	Go to the next menu level. Accept an option.
Clear/Back	Exit the menu by pressing repeatedly. Go back to the previous menu level.
▲ ▼	Scroll through the current menu level.
◀ ▶	Go back to the previous menu level or forward to the next menu level.
Stop/Exit	Exit the menu or stop the current operation.

D

How to access the menu mode

1. Press **Menu**.

2. Choose an option.
   MFC-9120CN:
   - Press **1** for General Setup menu.
   - Press **2** for Fax menu.
   - Press **3** for Copy menu.
   - Press **4** for Printer menu.
   - Press **5** for Network menu.
   - Press **6** for Machine Info. menu.
   - Press **9** for Service menu. [1]
   - Press **0** for Initial Setup menu.

   MFC-9320CW:
   - Press **1** for General Setup menu.
   - Press **2** for Fax menu.
   - Press **3** for Copy menu.
   - Press **4** for Printer menu.
   - Press **5** for USB Direct I/F menu.
   - Press **6** for Print Reports menu.
   - Press **7** for Network menu.
   - Press **8** for Machine Info. menu.
   - Press **9** for Service menu. [1]
   - Press **0** for Initial Setup menu.

   [1] This will appear only when the LCD shows an error message.

   You can also scroll through each menu level by pressing ▲ or ▼ for the direction you want.

3. Press **OK** when the option you want appears on the LCD.
   The LCD will then show the next menu level.

4. Press ▲ or ▼ to scroll to your next menu selection.

5. Press **OK**.
   When you have finished setting an option, the LCD will show `Accepted`.

6. Press **Stop/Exit** to exit Menu mode.

Menu table

The factory settings are shown in Bold with an asterisk.

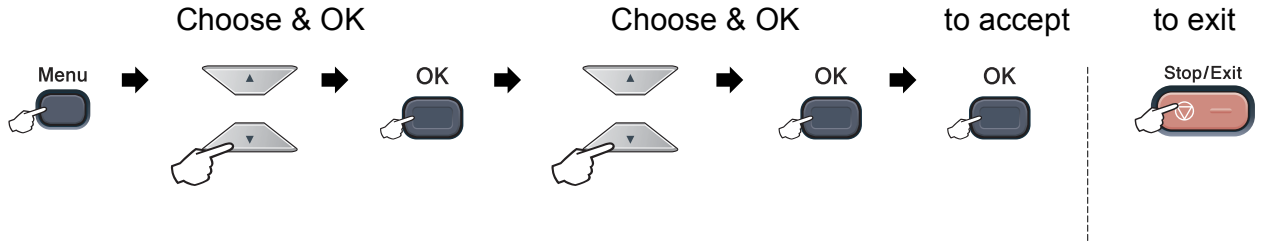

Main Menu	Submenu	Menu Selections	Options	Descriptions	Page
1.General Setup	1.Mode Timer	—	0 Sec 30 Secs 1 Min **2 Mins*** 5 Mins Off	Sets the time to return to Fax mode and the time the machine will change from individual user to public user mode when using Secure Function Lock.	24
	2.Paper	1.Paper Type	Thin **Plain*** Thick Thicker Recycled Paper	Sets the type of paper in the paper tray.	24
		2.Paper Size	**A4*** Letter Legal Executive A5 A5 L A6 B5 B6 Folio	Sets the size of the paper in the paper tray.	24
	3.Volume	1.Ring	Off Low **Med*** High	Adjusts the ring volume.	25

Main Menu	Submenu	Menu Selections	Options	Descriptions	Page
1.General Setup (Continued)	**3.Volume** (Continued)	**2.Beeper**	Off Low **Med*** High	Adjusts the volume level of the beeper.	25
		3.Speaker	Off Low **Med*** High	Adjusts the speaker volume.	25
	4.Daylight Save	—	On Off	Changes for Daylight Savings Time manually.	26
	5.Ecology	**1.Toner Save**	On **Off***	Increases the page yield of the toner cartridge.	26
		2.Sleep Time	Range varies depending on model. **005Min***	Conserves power.	26
	6.LCD Contrast	—	▼ -□□□□■+ ▲ ▼ -□□□■□+ ▲ ▼ **-□□■□□+ ▲*** ▼ -□■□□□+ ▲ ▼ -■□□□□+ ▲	Adjusts the contrast of the LCD.	27
	7.Security	**1.Memory Security** (MFC-9120CN only)	—	Stops unauthorized users from most operations except receiving faces into the memory.	32
		1.Function Lock (MFC-9320CW only)	—	Can restrict selected machine operation for up to 25 individual users and all other non-authorized Public users.	29
		2.Setting Lock	—	Stops unauthorized users from changing the machine's current settings.	34

Main Menu	Submenu	Menu Selections		Options	Descriptions	Page
1.General Setup (Continued)	8.Document Scan	1.Glass ScanSize		**A4*** Letter	Adjusts the scan area of the scanner glass to the size of the document.	38
		2.File Size	1.Color	Small **Middle*** Large	You can set your own default settings of the data compression rate.	See *Software User's Guide* on the CD-ROM.
			2.Gray	Small **Middle*** Large		

Main Menu	Submenu	Menu Selections	Options	Descriptions	Page
2.Fax	1.Setup Receive (In Fax mode only)	1.Ring Delay	(02 - 10) **02*** (Example for the Australia)	Sets the number of rings before the machine answers in Fax Only or Fax/Tel mode.	48
		2.F/T Ring Time	20 Secs **30 Secs*** 40 Secs 70 Secs	Sets the pseudo/double-ring time in Fax/Tel mode.	48
		3.Fax Detect	**On*** Off	Receives fax messages without pressing **Start**.	49
		4.Remote Codes	On (*51, #51) **Off*** (*91, #91 for New Zealand)	Allows you to answer all calls at an extension or external phone and use codes to turn the machine on or off. You can personalize these codes.	61
		5.Auto Reduction	**On*** Off	Cuts the size of incoming faxes.	50
		6.Memory Receive	**On*** Off	Automatically stores any incoming faxes in memory if it runs out of paper.	50
		7.Print Density	▼ -■□□+ ▲ ▼ -□■□+ ▲* ▼ -□□■+ ▲	Makes printouts darker or lighter.	49
		8.Polling RX	**Standard*** Secure Timer	Sets up your machine to poll another fax machine.	79
		9.Fax Rx Stamp	On **Off***	Prints the received time and date on the top of the received faxes.	50

D

Main Menu	Submenu	Menu Selections	Options	Descriptions	Page
2.Fax (Continued)	**2.Setup Send** (In Fax mode only)	**1.Contrast**	**Auto*** Light Dark	Changes the lightness or darkness of faxes you send.	42
		2.Fax Resolution	**Standard*** Fine S.Fine Photo	Sets the default resolution for outgoing faxes.	42
		3.Delayed Fax	—	Sets the time of day in 24 hour format that the delayed faxes will be sent.	44
		4.Batch TX	On **Off***	Combines delayed faxes going to the same fax number at the same time of day into one transmission.	44
		5.Real Time TX	Next Fax:On Next Fax:Off On **Off***	Sends a fax without using the memory.	43
		6.Polled TX	**Standard*** Secure	Sets up your machine with a document to be retrieved by another fax machine.	80
		7.Coverpg Setup	Next Fax:On Next Fax:Off On **Off*** Print Sample	Automatically sends a cover page you have programmed.	41
		8.Coverpage Note	—	Sets up your own comments for the fax cover page.	41
		9.Overseas Mode	On **Off***	If you are having difficulty sending faxes overseas, set this to On.	44

Main Menu	Submenu	Menu Selections	Options	Descriptions	Page
2.Fax (Continued)	**3.Address Book**	**1.One Touch Dial**	—	Stores up to 8 One Touch Dial numbers, so you can dial by pressing one key (and **Start**).	65
		2.Speed Dial	—	Stores up to 200 Speed Dial numbers, so you can dial by pressing only a few keys (and **Start**).	66
		3.Setup Groups	—	Sets up to 20 Group numbers for Broadcasting.	69
	4.Report Setting	**1.Transmission**	On On+Image **Off*** Off+Image	Sets initial setup for Transmission Verification Report.	82
		2.Journal Period	Off **Every 50 Faxes*** Every 6 Hours Every 12 Hours Every 24 Hours Every 2 Days Every 7 Days	Sets the interval for automatic printing of the Fax Journal.	83
	5.Remote Fax Opt	**1.Forward/Store**	**Off*** Fax Forward Fax Storage PC Fax Receive	Sets the machine to forward fax messages, to store incoming faxes in the memory (so you can retrieve them while you are away from your machine), or to send faxes to your PC.	72
		(Backup Print)		If you chose Fax Forward or PC Fax Receive, you can turn on the safety feature Backup Print.	
		2.Remote Access	---*	Sets your own code for Remote Retrieval.	75
		3.Print Document	—	Prints incoming faxes stored in the memory.	51

D

Main Menu	Submenu	Menu Selections	Options	Descriptions	Page
2.Fax (Continued)	**6.Dial Restrict.**	**1.Dial Pad**	**Off*** Enter # twice On	You can set the machine to restrict dialling when using the dial pad.	35
		2.One Touch Dial	**Off*** Enter # twice On	You can set the machine to restrict the dialling of One Touch numbers.	35
		3.Speed Dial	**Off*** Enter # twice On	You can set the machine to restrict the dialling of Speed Dial numbers.	35
	7.Remaining Jobs	—	—	You can check which jobs are in the memory and lets you cancel scheduled jobs.	45
	0.Miscellaneous	**1.Compatibility**	**High*** Normal Basic(for VoIP)	Adjusts the equalization for transmission difficulties. VoIP service providers offer fax support using various standards. If you regularly experience fax transmission errors, choose Basic(for VoIP).	141
		2.Distinctive (Not available in New Zealand)	On **Off***	Use with telephone company distinctive ringing service allows you to have a voice number and fax number on the one telephone line.	54
		2.Faxability (For New Zealand Only)	On **Off***	If you have FaxAbility from Telecom, you can use this function to store the ringing pattern of your fax number. And if you set in to ON, you should use the registered number only.	54
		3.Caller ID	Display# Print Report	View or print a list of the last 30 Caller IDs stored in the memory.	57

Main Menu	Submenu	Menu Selections	Options	Descriptions	Page
3.Copy	1.Quality	—	Text Photo **Auto***	You can choose the Copy resolution for your type of document.	89
	2.Brightness	—	▼ -□□□□■+ ▲ ▼ -□□□■□+ ▲ ▼ **-□□■□□+ ▲*** ▼ -□■□□□+ ▲ ▼ -■□□□□+ ▲	Adjust the brightness for copies.	90
	3.Contrast	—	▼ -□□□□■+ ▲ ▼ -□□□■□+ ▲ ▼ **-□□■□□+ ▲*** ▼ -□■□□□+ ▲ ▼ -■□□□□+ ▲	Adjusts the contrast for copies. You can change to the higher Copy resolution when you make a text copy with 100% ratio using the scanner glass.	89
	4.Color Adjust	1.Red	▼ -□□□□■+ ▲ ▼ -□□□■□+ ▲ ▼ **-□□■□□+ ▲*** ▼ -□■□□□+ ▲ ▼ -■□□□□+ ▲	Adjusts the red colour for copies.	90
		2.Green	▼ -□□□□■+ ▲ ▼ -□□□■□+ ▲ ▼ **-□□■□□+ ▲*** ▼ -□■□□□+ ▲ ▼ -■□□□□+ ▲	Adjusts the green colour for copies.	
		3.Blue	▼ -□□□□■+ ▲ ▼ -□□□■□+ ▲ ▼ **-□□■□□+ ▲*** ▼ -□■□□□+ ▲ ▼ -■□□□□+ ▲	Adjusts the blue colour for copies.	
4.Printer	1.Emulation	—	**Auto*** HP LaserJet BR-Script 3	Chooses the emulation mode.	See *Software User's Guide* on the CD-ROM.
	2.Print Options	1.Internal Font	1.HP LaserJet 2.BR-Script 3	Prints a list of the machine's internal fonts.	
		2.Configuration	—	Prints a list of the machine's printer settings.	
		3.Test Print	—	Prints a test page.	
	3.Output Color	—	**Auto*** Color B&W	Chooses colour or black & white printed documents. If you choose Auto, the machine selects a suitable option for the document (colour or B&W).	

D

Main Menu	Submenu	Menu Selections	Options	Descriptions	Page
4.Printer (Continued)	**4.Reset Printer**	—	1.Reset 2.Exit	Restores the printer settings to the original factory default settings.	See *Software User's Guide* on the CD-ROM.
	5.Calibration	—	Calibrate Reset	Adjusts the colour density or returns the colour calibration to the factory settings.	164
	6.Auto Regist.	**1.Registration**	1.Start 2.Exit	Adjust the print position of each colour automatically.	165
		2.Frequency	Low **Medium*** High Off	Set the interval time you want to carry out the auto registration.	
	7.Manual Regist.	**1.Print Chart**	—	Print the chart to manually check the registration of the colours.	165
		2.Set Regist.	1 Magenta 2 Cyan 3 Yellow 4 Magenta 5 Cyan 6 Yellow 7 Magenta 8 Cyan 9 Yellow	Sets the correction value on the chart you printed from Print Chart.	
	8.Drum Cleaning	—	—	Carry out cleaning the drum unit to improve the print quality problem.	159
5.USB Direct I/F (MFC-9320CW only)	**1.Direct Print**	**1.Paper Size**	**A4*** Letter Legal Executive A5 A5 L A6 B5 B6 Folio	Sets the paper size when printing directly from the USB flash memory drive.	99

Main Menu	Submenu	Menu Selections	Options	Descriptions	Page
5.USB Direct I/F (MFC-9320CW only) (Continued)	**1.Direct Print** (Continued)	**2.Media Type**	Thin **Plain*** Thick Thicker Recycled Paper	Sets the media type when printing directly from the USB flash memory drive.	99
		3.Multiple Page	**1in1*** 2in1 4in1 9in1 16in1 25in1 1 in 2x2 pages 1 in 3x3 pages 1 in 4x4 pages 1 in 5x5 pages	Sets the page style when printing multiple pages directly from the USB Flash memory drive.	100
		4.Orientation	**Portrait*** Landscape	Sets the page orientation when printing directly from the USB Flash memory drive.	100
		5.Collate	**On*** Off	Enables or disables the page collation when printing directly from the USB Flash memory drive.	100
		6.Print Quality	**Normal*** Fine	Sets the print quality option when printing directly from the USB Flash memory drive.	100
		7.PDF Option	**Document*** Document&Markup Document&Stamps	Sets the PDF option whether to print comments (Markup) or stamps in the PDF file along with the text.	100
		8.Index Print	**Simple*** Details	Sets the index print option, simple format or details.	100

D

Main Menu	Submenu	Menu Selections	Options	Descriptions	Page
5.USB Direct I/F (MFC-9320CW only) (Continued)	**2.Scan to USB**	**1.Resolution**	**Color 100 dpi*** Color 200 dpi Color 300 dpi Color 600 dpi Gray 100 dpi Gray 200 dpi Gray 300 dpi B&W 200 dpi B&W 200x100 dpi	Sets the resolution to send the scanned data to USB Flash memory drive.	See *Software User's Guide* on the CD-ROM.
		2.File Name	—	Enter the file name of the scanned data.	
	3.PictBridge	**1.Paper Size**	Letter **A4*** B5 A5 B6 A6	Sets the paper size when printing data from a camera with using PictBridge.	94
		2.Orientation	Letter A4 B5 A5 B6 A6 Then, you will choose Portrait Landscape	Sets the page orientation when printing data from a camera using PictBridge, If you choose the paper size Letter, A4, or B5, Portrait will be chosen. If you choose A5, B6 or A6, Landscape will be chosen.	
		3.Date & Time	On **Off***	Prints the date and time the photo is being taken on the photo.	
		4.File Name	On **Off***	Prints the file name of the data on the photo.	
		5.Print Quality	**Normal*** Fine	Sets the print quality option when printing data from a camera using PictBridge.	

Main Menu	Submenu	Menu Selections	Options	Descriptions	Page
6.Print Reports (MFC-9320CW)	1.XMIT Verify	1.View on LCD	—	Prints a Transmission Verification Report for your last transmission.	83
		2.Print Report	—		
	2.Help List	—	—	Prints the Help List so you can see at-a-glance how to quickly program your machine.	83
	3.Tel Index List	1.Numeric	—	Lists names and numbers stored in the One Touch and Speed Dial memory, in numerical or alphabetical order.	83
		2.Alphabetic	—		
	4.Fax Journal	—	—	Lists information about your last 200 incoming and outgoing faxes. (TX means Transmit. RX means Receive.)	83
	5.User Settings	—	—	Lists your settings.	83
	6.Network Config	—	—	Lists your Network settings.	83
	7.Order Form	—	—	You can print an accessories order form to fill out and send to your Brother dealer.	83

Main Menu	Submenu	Menu Selections	Options	Descriptions	Page
5.Network (MFC-9120CN)	1.TCP/IP	1.Boot Method	**Auto*** Static RARP BOOTP DHCP	Chooses the BOOT method that best suits your needs.	See *Network User's Guide* on the CD-ROM.
		2.IP Address	[000-255]. [000-255]. [000-255]. [000-255]	Enter the IP address.	
		3.Subnet Mask	[000-255]. [000-255]. [000-255]. [000-255]	Enter the Subnet mask.	
		4.Gateway	[000-255]. [000-255]. [000-255]. [000-255]	Enter the Gateway address.	
		5.Node Name	BRNXXXXXXXXXXXX	Enter the Node name.	
		6.WINS Config	**Auto*** Static	Chooses the WINS configuration mode.	
		7.WINS Server	Primary [000-255]. [000-255]. [000-255]. [000-255] Secondary [000-255]. [000-255]. [000-255]. [000-255]	Specifies the IP address of the primary or secondary WINS server.	
		8.DNS Server	Primary [000-255]. [000-255]. [000-255]. [000-255] Secondary [000-255]. [000-255]. [000-255]. [000-255]	Specifies the IP address of the primary or secondary DNS server.	
		9.APIPA	**On*** Off	Automatically allocates the IP address from the link-local address range.	
		0.IPv6	On **Off***	Enable or Disable the IPv6 protocol. If you want to use the IPv6 protocol, visit http://solutions.brother.com/ for more information.	
	2.Ethernet	—	**Auto*** 100B-FD 100B-HD 10B-FD 10B-HD	Chooses the Ethernet link mode.	

Main Menu	Submenu	Menu Selections	Options	Descriptions	Page
5.Network (MFC-9120CN) (Continued)	3.Scan To FTP	—	**Color 100 dpi*** Color 200 dpi Color 300 dpi Color 600 dpi Gray 100 dpi Gray 200 dpi Gray 300 dpi B&W 200 dpi B&W 200x100 dpi	Chooses the file format to send the scanned data via FTP.	See *Network User's Guide* on the CD-ROM.
	4.ScanTo Network	—	**Color 100 dpi*** Color 200 dpi Color 300 dpi Color 600 dpi Gray 100 dpi Gray 200 dpi Gray 300 dpi B&W 200 dpi B&W 200x100 dpi	You can scan a black and white or colour document directly to a CIFS server on your local network or on the internet.	
	5.Time Zone	—	UTCXXX:XX	Sets the time zone for your country.	
	0.Network Reset	1.Reset	1.Yes 2.No	Restore all network settings to factory default.	
		2.Exit	—		

D

Main Menu	Submenu	Menu Selections		Options	Descriptions	Page
7.Network (MFC-9320CW)	1.Wired LAN	1.TCP/IP	1.Boot Method	**Auto*** Static RARP BOOTP DHCP	Chooses the BOOT method that best suits your needs.	See *Network User's Guide* on the CD-ROM.
			2.IP Address	[000-255]. [000-255]. [000-255]. [000-255]	Enter the IP address.	
			3.Subnet Mask	[000-255]. [000-255]. [000-255]. [000-255]	Enter the Subnet mask.	
			4.Gateway	[000-255]. [000-255]. [000-255]. [000-255]	Enter the Gateway address.	
			5.Node Name	BRNXXXXXXXXXXXX	Enter the Node name.	
			6.WINS Config	**Auto*** Static	Chooses the WINS configuration mode.	
			7.WINS Server	Primary [000-255]. [000-255]. [000-255]. [000-255] Secondary [000-255]. [000-255]. [000-255]. [000-255]	Specifies the IP address of the primary or secondary WINS server.	
			8.DNS Server	Primary [000-255]. [000-255]. [000-255]. [000-255] Secondary [000-255]. [000-255]. [000-255]. [000-255]	Specifies the IP address of the primary or secondary DNS server.	
			9.APIPA	**On*** Off	Automatically allocates the IP address from the link-local address range.	
			0.IPv6	On **Off***	Enable or Disable the IPv6 protocol. If you want to use the IPv6 protocol, visit http://solutions.brother.com/ for more information.	

Main Menu	Submenu	Menu Selections		Options	Descriptions	Page
7.Network (MFC-9320CW) (Continued)	1.Wired LAN (Continued)	2.Ethernet	—	**Auto*** 100B-FD 100B-HD 10B-FD 10B-HD	Chooses the Ethernet link mode.	See *Network User's Guide* on the CD-ROM.
		3.Set to Default	—	1.Reset 2.Exit	Restore the wired network setting to factory default.	
		4.Wired Enable	—	**On*** Off	Enable or Disable the Wired LAN manually.	
	2.WLAN	1.TCP/IP	1.Boot Method	**Auto*** Static RARP BOOTP DHCP	Chooses the BOOT method that best suits your needs.	
			2.IP Address	[000-255]. [000-255]. [000-255]. [000-255]	Enter the IP address.	
			3.Subnet Mask	[000-255]. [000-255]. [000-255]. [000-255]	Enter the Subnet mask.	
			4.Gateway	[000-255]. [000-255]. [000-255]. [000-255]	Enter the Gateway address.	
			5.Node Name	BRWXXXXXXXXXXXX	Enter the Node name.	
			6.WINS Config	**Auto*** Static	Chooses the WINS configuration mode.	
			7.WINS Server	Primary [000-255]. [000-255]. [000-255]. [000-255] Secondary [000-255]. [000-255]. [000-255]. [000-255]	Specifies the IP address of the primary or secondary WINS server.	
			8.DNS Server	Primary [000-255]. [000-255]. [000-255]. [000-255] Secondary [000-255]. [000-255]. [000-255]. [000-255]	Specifies the IP address of the primary or secondary DNS server.	
			9.APIPA	**On*** Off	Automatically allocates the IP address from the link-local address range.	

D

Main Menu	Submenu	Menu Selections		Options	Descriptions	Page
7.Network (MFC-9320CW) (Continued)	2.WLAN (Continued)	1.TCP/IP (Continued)	0.IPv6	On **Off***	Enable or Disable the IPv6 protocol. If you want to use the IPv6 protocol, visit http://solutions.brother.com/ for more information.	See *Network User's Guide* on the CD-ROM.
		2.Setup Wizard	1.On 2.Off	—	You can configure your print server.	
		3.SES/WPS/AOSS	1.On 2.Off	—	You can easily configure your wireless network settings using the one-button push method.	
		4.WPS w/PIN Code	1.On 2.Off	—	You can easily configure your wireless network settings using WPS with a PIN code.	
		5.WLAN Status	1.Status	Active(11b) Active(11g) Wired LAN Active WLAN OFF AOSS Active Connection Fail	You can see the current wireless network status.	
			2.Signal	Strong Medium Weak None	You can see the current wireless network signal strength.	
			3.SSID	—	You can see the current SSID.	
			4.Comm. Mode	Ad-hoc Infrastructure	You can see the current Communication Mode.	
		6.Set to Default	—	1.Reset 2.Exit	Restore the wireless network settings to factory default.	
		7.WLAN Enable	—	On **Off***	Enable or disable the wireless LAN manually.	

Main Menu	Submenu	Menu Selections		Options	Descriptions	Page
7.Network (MFC-9320CW) (Continued)	**3.Scan To FTP**	—	—	**Color 100 dpi*** Color 200 dpi Color 300 dpi Color 600 dpi Gray 100 dpi Gray 200 dpi Gray 300 dpi B&W 200 dpi B&W 200x100 dpi	Chooses the file format to send the scanned data via FTP.	See *Network User's Guide* on the CD-ROM.
	4.ScanTo Network	—	—	**Color 100 dpi*** Color 200 dpi Color 300 dpi Color 600 dpi Gray 100 dpi Gray 200 dpi Gray 300 dpi B&W 200 dpi B&W 200x100 dpi	You can scan a black and white or colour document directly to a CIFS server on your local network or on the internet.	
	5.Time Zone	—	—	UTCXXX:XX	Sets the time zone for your country.	
	0.Network Reset	**1.Reset**	—	1.Yes 2.No	Restores all network settings to factory default.	
		2.Exit	—	—		

D

Main Menu	Submenu	Menu Selections	Options	Descriptions	Page
8.Machine Info. (MFC-9320CW) 6.Machine Info. (MFC-9120CN)	1.Serial No.	—	—	You can check the serial number of your machine.	187
	2.Page Counter	—	Total Fax/List Copy Print	You can check the number of total pages the machine has printed during its life.	187
	3.Parts Life	1.Drum	1.Black(K) 2.Cyan(C) 3.Magenta(M) 4.Yellow(Y)	You can check the percentage of a machine part's life that remains available.	187
		2.Belt Unit	—		
		3.PF Kit	—		
		4.Fuser	—		
0.Initial Setup	1.Receive Mode	—	**Fax Only*** Fax/Tel External TAD Manual	Chooses the receive mode that best suits your needs.	46
	2.Date&Time	—	—	Puts the date and time on the LCD and in headings of faxes you send.	See *Quick Setup Guide.*
	3.Station ID	—	Fax: Tel: Name:	Sets your name and fax number to appear on each page you fax.	
	4.Tone/Pulse (not available in New Zealand)	—	**Tone*** Pulse	Chooses the dialling mode.	71
	4.Dial Tone (for New Zealand) 5.Dial Tone	—	Detection **No Detection***	You can shorten the dial tone detect pause.	141
	5.Dial Prefix (for New Zealand) 6.Dial Prefix	—	—	Sets a prefix number that will always be added before the fax number every time you dial.	27
	6.Reset (for New Zealand) 7.Reset	1.Network	1.Reset 2.Exit	Restores all network settings to factory default.	187
		2.Address & Fax	1.Reset 2.Exit	Restores all stored phone numbers and fax settings.	
		3.All Settings	1.Reset 2.Exit	Restores all the machine settings to factory default.	

Entering text

When setting certain menu selections, such as the Station ID, you will need to type text characters. The dial pad keys have letters printed on them. The keys: **0**, **#** and ∗ do *not* have printed letters because they are used for special characters.

Press the appropriate dial pad key the number of times shown in this reference table to access the character you want.

Press Key	one time	two times	three times	four times	five times	six times	seven times	eight times	nine times
1	@	.	/	1	@	.	/	1	@
2	a	b	c	A	B	C	2	a	b
3	d	e	f	D	E	F	3	d	e
4	g	h	i	G	H	I	4	g	h
5	j	k	l	J	K	L	5	j	k
6	m	n	o	M	N	O	6	m	n
7	p	q	r	s	P	Q	R	S	7
8	t	u	v	T	U	V	8	t	u
9	w	x	y	z	W	X	Y	Z	9

For menu selections that do not allow lower case character selection, please use this reference table.

Press Key	one time	two times	three times	four times	five times
2	A	B	C	2	A
3	D	E	F	3	D
4	G	H	I	4	G
5	J	K	L	5	J
6	M	N	O	6	M
7	P	Q	R	S	7
8	T	U	V	8	T
9	W	X	Y	Z	9

Inserting spaces

To enter a space in a fax number, press ▶ once between numbers. To enter a space in a name, press ▶ twice between characters.

Making corrections

If you entered a letter incorrectly and want to change it, press ◀ to move the cursor to the incorrect character, and then press **Clear/Back**.

Repeating letters

To enter a character on the same key as the previous character, press ▶ to move the cursor right before pressing the key again.

Special characters and symbols

Press ∗, **#** or **0**, then press ◀ or ▶ to move the cursor to the symbol or character you want. Press **OK** to choose it. The symbols and characters below will appear depending on your menu selection.

Press ∗	for	(space) ! " # $ % & ’ ( ) ∗ + , - . / €
Press **#**	for	: ; < = > ? @ [ ] ^ _ \ ~ ` | { }
Press **0**	for	Ä Ë Ö Ü À Ç È É 0

E Specifications

General

Printer Type	LED	
Print Method	Electrophotographic LED	
Memory Capacity	64 MB	
LCD (liquid crystal display)	16 characters × 2 lines	
Power Source	220 - 240 V AC 50/60Hz	
Power Consumption	Peak:	1176 W
	Copying:	Average 480 W [1]
	Sleep:	(MFC-9120CN) Average 11 W
		(MFC-9320CW) Average 12 W
	Standby:	Average 75 W
Dimensions		

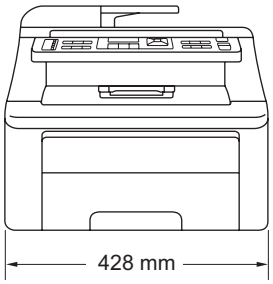

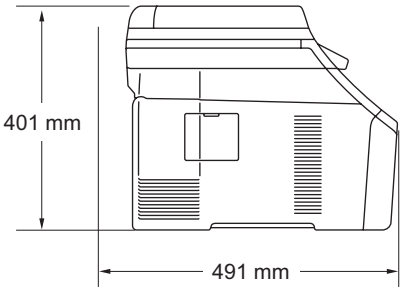

Weight	Without Drum/Toner Unit:	20.1 kg
Noise level	Sound power	
	Operating (Printing):	LWAd = 6.5 Bell (A)
	Standby:	LWAd = 4.8 Bell (A)
	Sound pressure	
	Operating (Printing):	LPAm = 53 dBA
	Standby:	LPAm = 30 dBA

[1] When making a copy from one sheet

Temperature	Operating:	10 to 32.5 °C
	Storage:	0 to 40 °C
Humidity	Operating:	20 to 80% (without condensation)
	Storage:	10 to 90% (without condensation)
ADF (automatic document feeder)	Up to 35 pages (Staggered) [80 gsm]	
	Recommended Environment for Best Results:	
	Temperature:	20 to 30 °C
	Humidity:	50% - 70%
Paper Tray	250 Sheets [80 gsm]	

Print media

Paper Input	**Paper Tray**	
	■ Paper Type:	Thin paper, Plain paper or Recycled paper
	■ Paper Size:	Letter, A4, B5 (ISO), A5, A5 (Long Edge), B6 (ISO), A6, Executive, Legal and Folio
	■ Paper Weight:	60 to 105 gsm
	■ Maximum Paper Tray Capacity:	Up to 250 sheets of 80 gsm Plain Paper
	Manual Feed Slot	
	■ Paper Type:	Thin paper, Plain Paper, Thick paper, Thicker Paper, Bond paper, Recycled Paper, Envelopes or Labels [1]
	■ Paper Size:	Width: 76.2 to 220 mm [2] Length:116 to 406.4 mm [2]
	■ Paper Weight:	60 to 163 gsm
Paper Output	Up to 100 sheets (face down print delivery to the output paper tray)	

[1] For labels, we recommend removing printed pages from the output paper tray immediately after they exit the machine to avoid the possibility of smudging.

[2] When using paper that is smaller than 105 × 148 mm (or A6 size) open the back cover (back output tray).

Fax

Compatibility	ITU-T Super Group 3	
Coding System	MH/MR/MMR/JBIG/JPEG	
Modem Speed	Automatic Fallback:	33,600 bps
Document Size	ADF Width:	147.3 to 215.9 mm
	ADF Length:	147.3 to 356.0 mm
	Scanner Glass Width:	Max. 215.9 mm
	Scanner Glass Length:	Max. 297 mm
Scanning Width	Max. 208 mm	
Printing Width	Max. 208 mm	
Greyscale	8 bit/256 levels	
Polling Receive Type	Standard, Secure, Timer, Sequential	
Polling Transmit Type	Standard, Secure	
Contrast Control	Automatic/Light/Dark (manual setting)	
Resolution	Horizontal:	8 dot/mm
	Vertical	
	■ Standard:	3.85 line/mm
	■ Fine:	7.7 line/mm
	■ Photo:	7.7 line/mm
	■ Superfine:	15.4 line/mm
One Touch Dial	8 (4 × 2)	
Speed Dial	200 stations	
Groups	Up to 20	
Broadcasting [3]	258 stations	
Automatic Redial	3 times at 5 minute intervals	
Ring Delay	2, 3, 4, 5, 6, 7, 8, 9 or 10 rings (for Australia)	
	1, 2, 3, 4, 5, 6, 7, 8, 9 or 10 rings (for New Zealand)	
	0, 1, 2, 3, 4, 5, 6, 7, 8, 9 or 10 rings (for some countries)	
Communication Source	Public switched telephone network	
Memory Transmission	Up to 600 [1]/500 [2] pages [3]	
Out of Paper Reception	Up to 600 [1]/500 [2] pages [3]	

[1] ‘Pages’ refers to the ‘Brother Standard Chart No. 1’ (a typical business letter, Standard resolution, JBIG code). Specifications and printed materials are subject to change without prior notice.

[2] ‘Pages’ refers to the ‘ITU-T Test Chart #1’ (a typical business letter, Standard resolution, JBIG code). Specifications and printed materials are subject to change without prior notice.

[3] Black & White only

Copy

Colour/Monochrome	Yes/Yes	
Document Size	ADF Width:	148 to 215.9 mm
	ADF Length:	148 to 355.6 mm
	Scanner Glass Width:	Max. 215.9 mm
	Scanner Glass Length:	Max. 297 mm
Copy Width	Max. 208 mm	
Multiple Copies	Stacks or Sorts up to 99 pages	
Reduce/Enlarge	25% to 400% (in increments of 1%)	
Resolution	Up to 600 × 600 dpi	
First Copy Out Time (Monochrome)	Less than 19 seconds (from READY mode)	
First Copy Out Time (Colour)	Less than 24 seconds (from READY mode)	

Scan

Colour/Monochrome	Yes/Yes	
TWAIN Compliant	Yes (Windows® 2000 Professional/Windows® XP/ Windows® XP Professional x64 Edition/Windows Vista®)	
	Mac OS X 10.3.9 or greater [1]	
WIA Compliant	Yes (Windows® XP/Windows Vista®)	
Colour Depth	24 bit colour	
Resolution	Up to 19200 × 19200 dpi (interpolated) [2]	
	Up to 1200 × 2400 dpi (optical) [2] (From Scanner Glass)	
	Up to 1200 × 600 dpi (optical) [2] (From ADF)	
Document Size	ADF Width:	148.0 to 215.9 mm
	ADF Length:	148.0 to 355.6 mm
	Scanner Glass Width:	Max. 215.9 mm
	Scanner Glass Length:	Max. 297 mm
Scanning Width	Max. 210 mm	
Greyscale	256 levels	

[1] For the latest driver updates for the Mac OS X you are using, visit us at http://solutions.brother.com/.

[2] Maximum 1200 × 1200 dpi scanning with the WIA driver in Windows® XP/Windows Vista® (resolution up to 19200 × 19200 dpi can be chosen by using the scanner utility)

Print

Emulations	PCL6, BR-Script3 (PostScript®3™)
Printer Driver	Host-Based Driver for Windows® 2000 Professional/ Windows® XP/Windows® XP Professional x64 Edition/ Windows Vista®/Windows Server® 2003 [1]/ Windows Server® 2003 x64 Edition [1]/Windows Server® 2008 [1]
	BR-Script3 (PPD file) for Windows® 2000 Professional/ Windows® XP/Windows® XP Professional x64 Edition/ Windows Vista®/Windows Server® 2003 [1]/Windows Server® 2008 [1]
	Macintosh Printer Driver for Mac OS X 10.3.9 or greater [2]
	BR-Script3 (PPD file) for Mac OS X 10.3.9 or greater [2]
Resolution	600 dpi × 600 dpi, 2400 dpi (600 × 2400)
Print Speed (Monochrome)	Up to 16 pages/minute (A4 size) [3]
Print Speed (Colour)	Up to 16 pages/minute (A4 size) [3]
First Print Out Time (Monochrome)	Less than 15 seconds (from the READY mode and standard tray)
First Print Out Time (Colour)	Less than 16 seconds (from the READY mode and standard tray)
First Copy Out Time (Monochrome)	Less than 19 seconds (from the READY mode and standard tray)
First Copy Out Time (Colour)	Less than 24 seconds (from the READY mode and standard tray)

[1] Print only via network.

[2] For the latest driver updates for the Mac OS X you are using, visit us at http://solutions.brother.com/.

[3] The print speed may change depending on the type of document you print.

Interfaces

USB	Use a USB 2.0 interface cable that is no longer than 2.0 m. [1] [2]
LAN [3]	Use an Ethernet UTP cable category 5 or greater.
Wireless LAN (MFC-9320CW)	Your machine supports IEEE 802.11b/g wireless communication with your wireless LAN using Infrastructure mode or a wireless Peer-to-Peer connection in Ad-hoc mode.

[1] Your machine has a Hi-Speed USB 2.0 interface. The machine can also be connected to a computer that has a USB 1.1 interface.

[2] Third party USB ports are not supported.

[3] See *Ethernet wired network* on page 227 and the *Network User's Guide* on the CD-ROM for detailed network specifications.

PictBridge (MFC-9320CW)

Compatibility	Supports the Camera & Imaging Products Association PictBridge standard CIPA-001. Visit http://www.cipa.jp/pictbridge/ for more information.
Interface	USB direct interface.

Direct Print feature (MFC-9320CW)

Compatibility	PDF version 1.7 [1], JPEG, Exif + JPEG, PRN (created by Brother printer driver), TIFF (scanned by all Brother MFC or DCP models), PostScript®3™ (created by Brother BR-Script 3 printer driver), XPS version 1.0.

[1] PDF data that includes a JBIG2 image file, a JPEG2000 image file or a transparency file is not supported.

Computer requirements

Minimum System Requirements and Supported PC Software Functions								
Computer Platform & Operating System Version		**Processor Minimum Speed**	**Minimum RAM**	**Recommended RAM**	**Hard Disk Space to install**		**Supported PC Software Functions**	**Supported PC Interface [3]**
					For Drivers	**For Applications**		
Windows® Operating System [1]	Windows® 2000 Professional [5]	Intel® Pentium® II or equivalent	64 MB	256 MB	150 MB	310 MB	Printing, PC Fax [4], Scanning	USB, 10/100 Base Tx (Ethernet), Wireless 802.11 b/g [6]
	Windows® XP Home [2 5] Windows® XP Professional [2 5]		128 MB					
	Windows® XP Professional x64 Edition [2]	64-bit (Intel®64 or AMD64) supported CPU	256 MB	512 MB				
	Windows Vista® [2]	Intel® Pentium® 4 or equivalent 64-bit (Intel®64 or AMD64) supported CPU	512 MB	1 GB	500 MB	500 MB		
	Windows Server® 2003 (print only via network)	Intel® Pentium® III or equivalent	256 MB	512 MB	50 MB	N/A	Printing	10/100 Base Tx (Ethernet), Wireless 802.11 b/g [6]
	Windows Server® 2003 x64 Edition (print only via network)	64-bit (Intel®64 or AMD64) supported CPU						
	Windows Server® 2008 (print only via network)	Intel® Pentium® 4 or equivalent 64-bit (Intel®64 or AMD64) supported CPU	512 MB	2 GB				
Macintosh Operating System	Mac OS X 10.3.9 - 10.4.3	PowerPC G4/G5, PowerPC G3 350MHz	128 MB	256 MB	80 MB	400 MB	Printing, PC Fax Send [4], Scanning	USB, 10/100 Base Tx (Ethernet), Wireless 802.11 b/g [6]
	Mac OS X 10.4.4 or greater [7]	PowerPC G4/G5, Intel® Core™ Processor	512 MB	1 GB				

1 Internet Explorer® 5.5 or greater.
2 For WIA, 1200 x 1200 resolution. Brother Scanner Utility enables to enhance up to 19200 x 19200 dpi.
3 Third party USB ports are not supported.
4 PC Fax supports black and white only.
5 PaperPort™ 11SE supports Microsoft® SP4 or higher for Windows® 2000 and SP2 or higher for XP.
6 MFC-9320CW only
7 For the latest driver updates for the Mac OS X you are using, visit us at http://solutions.brother.com/.

E

Consumable items

Toner Cartridge Life	Starter Toner Cartridge:	Approx. 1,000 pages (A4) [1]
	Standard Toner Cartridge:	
	TN-240BK (Black):	Approx. 2,200 pages (A4) [1]
	TN-240C (Cyan):	Approx. 1,400 pages (A4) [1]
	TN-240M (Magenta):	Approx. 1,400 pages (A4) [1]
	TN-240Y (Yellow):	Approx. 1,400 pages (A4) [1]
Drum Unit	DR-240CL [2]	Approx. 15,000 pages (A4) [5]
	DR-240CL-BK [3]	
	DR-240CL-CMY [4]	
Belt Unit	BU-200CL	Approx. 50,000 pages (A4)
Waste Toner Box	WT-200CL	Approx. 50,000 pages

[1] Approx. cartridge yield is declared in accordance with ISO/IEC 19798.

[2] Contains 4pc. Drum Set

[3] Contains 1pc. Black Drum Unit

[4] Contains 1pc. Colour Drum Unit

[5] Drum yield is approximate, and may vary by type of use.

Note

- Brother does not recommend the use of consumables other than genuine Brother consumables.
- Your machine warranty may not cover any damage arising from the use of non genuine Brother consumables.

Ethernet wired network

Network board model name	NC-6700h	
LAN	You can connect your machine to a network for Network Printing, Network Scanning, PC Fax and Remote Setup. [1] [2]	
Support for	Windows® 2000 Professional, Windows® XP, Windows® XP Professional x64 Edition, Windows Vista®, Windows Server® 2003 [2], Windows Server® 2003 x64 Edition [2], Windows Server® 2008 [2] Mac OS X 10.3.9 or greater [3] [4]	
Protocols	IPv4:	ARP, RARP, BOOTP, DHCP, APIPA (Auto IP), WINS/NetBIOS name resolution, DNS Resolver, mDNS, LLMNR responder, LPR/LPD, Custom Raw Port/Port9100, IPP/IPPS, FTP Client and Server, TELNET Server, HTTP/HTTPS Server, SSL/TLS, TFTP Client and Server, SMTP Client, APOP, POP before SMTP, SMTP-AUTH, SNMPv1/v2c/v3, ICMP, LLTD responder, Web Services Print, CIFS Client, SNTP
	IPv6:	(Turned off as default) NDP, RA, DNS resolver, mDNS, LLMNR responder, LPR/LPD, Custom Raw Port/Port9100, IPP/IPPS, FTP Client and Server, TELNET Server, HTTP/HTTPS server, SSL/TLS, TFTP Client and Server, SMTP Client, APOP, POP before SMTP, SMTP-AUTH, SNMPv1/v2c/v3, ICMPv6, LLTD responder, Web Services Print, CIFS Client, SNTP
Network type	Ethernet 10/100 BASE-TX Auto Negotiation (Wired LAN)	

Management utilities [5]	BRAdmin Light for Windows® 2000 Professional, Windows® XP, Windows® XP Professional x64 Edition, Windows Vista®, Windows Server® 2003, Windows Server® 2003 x64 Edition, Windows Server® 2008 and Mac OS X 10.3.9 or greater [4] BRAdmin Professional for Windows® 2000 Professional, Windows® XP, Windows® XP Professional x64 Edition, Windows Vista®, Windows Server® 2003, Windows Server® 2003 x64 Edition and Windows Server® 2008 Web BRAdmin for Windows® 2000 Professional, Windows® XP, Windows® XP Professional x64 Edition, Windows Vista®, Windows Server® 2003, Windows Server® 2003 x64 Edition and Windows Server® 2008 Client computers with a web browser supporting Java.

1 PC Fax Send for Mac

2 Print only via network.

3 Mac OS X 10.3.9 or greater (mDNS)

4 For the latest driver updates for the Mac OS X you are using, visit us at http://solutions.brother.com/.

5 BRAdmin Professional and Web BRAdmin are available as a download from http://solutions.brother.com/.

Ethernet wireless network (MFC-9320CW only)

Network board model name	NC-7500W	
LAN	You can connect your machine to a network for Network Printing, Network Scanning, PC Fax and Remote Setup [1 2].	
Support for	Windows® 2000 Professional, Windows® XP, Windows® XP Professional x64 Edition, Windows Vista®, Windows Server® 2003, Windows Server® 2003 x64 Edition, Windows Server® 2008 and Windows Server® 2008 x64 Edition [2]	
	Mac OS X 10.3.9 or greater [3 4]	
Protocols	IPv4:	ARP, RARP, BOOTP, DHCP, APIPA (Auto IP), WINS, NetBIOS name resolution, DNS Resolver, mDNS, LLMNR responder, LPR/LPD, Custom Raw Port/Port9100, IPP/IPPS, FTP Client and Server, TELNET Server, HTTP/HTTPS Server, SSL/TLS, TFTP Client and Server, SMTP Client, APOP, POP before SMTP, SMTP AUTH, SNMPv1/v2c/v3, ICMP, LLTD responder, Web Services Print, CIFS Client, SNTP
	IPv6:	(Turned off as default) NDP, RA, DNS resolver, mDNS, LLMNR responder, LPR/LPD, Custom Raw Port/Port9100, IPP/IPPS, FTP Client and Server, TELNET Server, HTTP/HTTPS server, SSL/TLS, TFTP Client and Server, SMTP Client, APOP, POP before SMTP, SMTP AUTH, SNMPv1/v2c/v3, ICMPv6, LLTD responder, Web Services Print, CIFS Client, SNTP
Network type	IEEE 802.11 b/g (Wireless LAN)	

Management utilities [5]	BRAdmin Light for Windows® 2000 Professional, Windows® XP, Windows® XP Professional x64 Edition, Windows Vista®, Windows Server® 2003, Windows Server® 2003 x64 Edition, Windows Server® 2008 and Mac OS X 10.3.9 or greater [4] BRAdmin Professional for Windows® 2000 Professional, Windows® XP, Windows® XP Professional x64 Edition, Windows Vista®, Windows Server® 2003, Windows Server® 2003 x64 Edition and Windows Server® 2008 Web BRAdmin for Windows® 2000 Professional, Windows® XP, Windows® XP Professional x64 Edition, Windows Vista®, Windows Server® 2003, Windows Server® 2003 x64 Edition and Windows Server® 2008 Client computers with a web browser supporting Java.

1 PC Fax Send for Mac

2 Only printing for Windows Server® 2003 and Windows Server® 2008

3 Mac OS X 10.3.9 or greater (mDNS)

4 For the latest driver updates for the Mac OS X you are using, visit us at http://solutions.brother.com/.

5 BRAdmin Professional and Web BRAdmin are available as a download from http://solutions.brother.com/.

Authentication and encryption for wireless users only

Authentication method

The Brother machine supports the following methods:

- Open system

  Wireless devices are allowed to access the network without any authentication.

- Shared key

  A secret pre-determined key is shared by all devices that will access the wireless network. The Brother machine uses the WEP keys as the pre-determined key.

- WPA-PSK/WPA2-PSK

  Enables a Wi-Fi Protected Access Pre-Shared Key (WPA-PSK/WPA2-PSK), which enables the Brother wireless machine to associate with access points using TKIP for WPA-PSK or AES for WPA-PSK and WPA2-PSK (WPA-Personal).

- LEAP

  Cisco LEAP (Light Extensible Authentication Protocol) has been developed by Cisco Systems, Inc. and enables the Brother wireless product to associate with access points using CKIP encryptions.

- EAP-FAST

  EAP-FAST (Extensible Authentication Protocol - Flexible Authentication via Secured Tunnel) has been developed by Cisco Systems, Inc. which uses user ID and password for authentication, and symmetric key algorithms to achieve a tunneled authentication process.

  The Brother machine supports the following inner authentications:

  - EAP-FAST/NONE

    MS-CHAPv2 is used for Provisioning, and the method of EAP-FAST corresponding to second phase authentication method.

  - EAP-FAST/MS-CHAPv2

    Method of EAP-FAST corresponding to CCXv4 that uses MS-CHAPv2 for inner method.

  - EAP-FAST/GTC

    Method of EAP-FAST corresponding to CCXv4 that uses GTC for inner method.

Encryption methods

Encryption is used to secure the data that is sent over the wireless network. The Brother machine supports the following encryption methods:

- WEP

  By using WEP (Wired Equivalent Privacy), the data is transmitted and received with a secure key.

- TKIP

  TKIP (Temporal Key Integrity Protocol) provides per-packet key mixing a message integrity check and re-keying mechanism.

- AES

  AES (Advanced Encryption Standard) is Wi-Fi® authorized strong encryption standard.

- CKIP

  The original Key Integrity Protocol for LEAP by Cisco Systems, Inc.

Network key

There are some rules for each security method:

- Open system/Shared key with WEP

  This key is a 64-bit or 128-bit value that must be entered in an ASCII or hexadecimal format.

  - 64 (40) bit ASCII:

    Uses 5 text characters. e.g.“WSLAN” (this is case sensitive).

  - 64 (40) bit hexadecimal:

    Uses 10 digits of hexadecimal data. e.g.“71f2234aba”.

  - 128 (104) bit ASCII:

    Uses 13 text characters. e.g.“Wirelesscomms” (this is case sensitive).

  - 128 (104) bit hexadecimal:

    Uses 26 digits of hexadecimal data. e.g.“71f2234ab56cd709e5412aa2ba”.

- WPA-PSK/WPA2-PSK and TKIP or AES

  Uses a Pre-Shared Key (PSK) that is 8 or more characters in length, up to a maximum of 63 characters.

- LEAP

  Uses User ID and Password.

  - User ID: less than 64 characters in length.
  - Password: less than 32 characters in length.

- EAP-FAST

  Uses User ID and Password.

  - User ID: less than 64 characters in length.
  - Password: less than 32 characters in length.

Wireless one-push configuration

If your wireless access point supports either SecureEasySetup™, Wi-Fi Protected Setup (PBC [1]) or AOSS™, you can configure the machine easily without a computer. By pushing a button on the wireless LAN router / access point and using the menu on the machine, you can set up the wireless network and security settings. See the User's Guide for your wireless LAN router / access point for instructions on how to access one-push mode.

[1] Push Button Configuration

Note

Routers or access points that support SecureEasySetup™, Wi-Fi Protected Setup or AOSS™ have the symbols shown below.

F Glossary

This is a comprehensive list of features and terms that appear in Brother manuals. Availability of these features depends on the model you purchased.

ADF (automatic document feeder)

The document can be placed in the ADF and scanned one page at a time automatically.

Address Book (▼)

A pre-programmed number for easy dialling.

You must press ▼ (**Address Book**), then enter the three-digit Speed Dial location and press **Start** to begin the dialling process.

Auto Reduction

Reduces the size of incoming faxes.

Automatic fax transmission

Sending a fax without picking up the handset of the external telephone.

Automatic Redial

A feature that enables your machine to redial the last fax number after five minutes if the fax did not go through because the line was busy.

Backup Print

Your machine prints a copy of every fax that is received and stored in memory. This is a safety feature so you will not lose messages during a power failure.

Batch Transmission

As a cost saving feature, all delayed faxes to the same fax number will be sent as one transmission.

Beeper Volume

Volume setting for the beep when you press a key or make an error.

Broadcasting

The ability to send the same fax message to more than one location.

Cancel Job

Cancels a programmed print job and clears the machine's memory.

CNG tones

The special tones (beeps) sent by fax machines during automatic transmission to tell the receiving machine that a fax machine is calling.

Coding method

Method of coding the information contained in the document. All fax machines must use a minimum standard of Modified Huffman (MH). Your machine is capable of greater compression methods, Modified Read (MR), Modified Modified Read (MMR) and JBIG, if the receiving machine has the same capability.

Communication error (or Comm. Error)

An error during fax sending or receiving, usually caused by line noise or static.

Compatibility group

The ability of one fax unit to communicate with another. Compatibility is assured between ITU-T Groups.

Contrast

Setting to compensate for dark or light documents, by making faxes or copies of dark documents lighter and light documents darker.

Delayed Fax

Sends your fax at a specified later time that day.

Distinctive Ring

A subscriber service purchased from the telephone company that gives you another telephone number on an existing telephone line. The Brother machine uses the new number to simulate a dedicated fax line.

Dual Access

Your machine can scan outgoing faxes or scheduled jobs into memory at the same time it is sending a fax or receiving or printing an incoming fax.

ECM (Error Correction Mode)

Detects errors during fax transmission and resends the pages of the fax that had an error.

Extension telephone

A telephone on the fax number that is plugged into a separate wall socket.

External phone

A TAD (telephone answering device) or telephone that is connected to your machine.

F/T Ring Time

The length of time that the Brother machine pseudo/double-rings (when the Receive Mode setting is Fax/Tel) to notify you to pick up a voice call that it answered.

FaxAbility (For New Zealand)

A subscriber service purchased from the telephone company that provides another telephone number on an existing telephone line. The Brother fax machine uses the new number to simulate a dedicated fax line.

Fax Detect

Enables your machine to respond to CNG tones if you interrupt a fax call by answering it.

Fax Forwarding

Sends a fax received into the memory to another pre-programmed fax number.

Fax Journal

Lists information about the last 200 incoming and outgoing faxes. TX means Transmit. RX means Receive.

Fax Storage

You can store faxes in the memory.

Fax tones

The signals sent by sending and receiving fax machines while communicating information.

Fax/Tel

You can receive faxes and telephone calls. Do not use this mode if you are using a telephone answering device (TAD).

Fine resolution

Resolution is 203 × 196 dpi. It is used for small print and graphs.

Greyscale

The shades of grey available for copying and faxing photographs.

Group number

A combination of One Touch and Speed Dial numbers that are stored on a One Touch key or in a Speed Dial location for Broadcasting.

Help List

A printout of the complete Menu table that you can use to program your machine when you do not have the User's Guide with you.

Journal Period

The pre-programmed time period between automatically printed Fax Journal Reports. You can print the Fax Journal on demand without interrupting the cycle.

LCD (liquid crystal display)

The display screen on the machine that shows interactive messages during On-Screen Programming and shows the date and time when the machine is idle.

Manual fax

When you lift the handset of your external telephone so you can hear the receiving fax machine answer before you press **Start** to begin transmission.

Menu mode

Programming mode for changing your machine's settings.

OCR (optical character recognition)

The bundled ScanSoft™ PaperPort™ 11SE with OCR or Presto! PageManager software application converts an image of text to text you can edit.

One Touch

Keys on the machine's control panel where you can store numbers for easy dialling. You can store a second number on each key if you press **Shift** and the One Touch key together.

Out of Paper Reception

Receives faxes into the machine's memory when the machine is out of paper.

Overseas Mode

Makes temporary changes to the fax tones to accommodate noise and static on overseas telephone lines.

Pause

Allows you to place a 3.5 second delay in the dialling sequence while you are dialling using the dial pad or while you are storing One Touch and Speed Dial numbers. Press **Redial/Pause** as many times as needed for longer pauses.

Polling

The process of a fax machine calling another fax machine to retrieve waiting fax messages.

Pulse

A form of rotary dialling on a telephone line.

Real Time Transmission

When memory is full, you can send faxes in real time.

Remaining Jobs

You can check which programmed fax jobs are waiting in the memory and cancel the jobs individually.

Remote Access Code

Your own four-digit code (– – –✱) that allows you to call and access your machine from a remote location.

Remote Activation code

Press this code (✱ 5 1) when you answer a fax call on an extension or external telephone.

Remote Retrieval Access

The ability to access your machine remotely from a touch tone telephone.

Resolution

The number of vertical and horizontal lines per inch.

Ring Delay

The number of rings before the machine answers in `Fax Only` and `Fax/Tel` modes.

Ring Volume

Volume setting for the machine's ring.

Scanning

The process of sending an electronic image of a paper document into your computer.

Search

An electronic, alphabetical listing of stored One Touch, Speed Dial and Group numbers.

Station ID

The stored information that appears on the top of faxed pages. It includes the sender's name and fax number.

TAD (telephone answering device)

You can connect an external TAD to your machine.

Tel Index List

A listing of names and numbers stored in One Touch and Speed Dial memory, in numerical order.

Temporary settings

You can choose certain options for each fax transmission and copy without changing the default settings.

Tone (not available in New Zealand)

A form of dialling on the telephone line used for Touch Tone telephones.

Transmission

The process of sending faxes over the telephone lines from your machine to the receiving fax machine.

User Settings List

A printed report that shows the current settings of the machine.

Xmit Report (Transmission Verification Report)

A listing for each transmission, that shows its date, time and number.

G Index

A

Address book 8, 63
ADF (automatic document feeder)
  faxing 38
  using 22
Answering machine (TAD)
  connecting 59
Apple Macintosh
  See Software User's Guide on the CD-ROM.
Automatic
  fax receive 47
    Fax Detect 49
  fax redial 64

B

Belt unit
  replacing 177
Broadcasting 39
  cancelling 40
  setting up groups for 69

C

Cancelling
  broadcast in process 40
  fax jobs in memory 45
  fax storage 73
  jobs awaiting redial 45
  remote fax options 75
Cleaning
  corona wires 158
  drum unit 159
  LED head 157
  scanner 156
Connecting
  external TAD (answering machine) 58
  external telephone 60
Consumable items 166, 167
Control panel overview 6
ControlCenter2 (for Macintosh)
  See Software User's Guide on the CD-ROM.
ControlCenter3 (for Windows®)
  See Software User's Guide on the CD-ROM.
Copy
  contrast 86, 89
  Enlarge/Reduce key 87
  enter copy mode 86
  keys 8, 87
  multiple 86
  N in 1 (page layout) 90
  Options Key 88
  out of memory 92
  quality 89
  single 86
  sort (ADF only) 89
  temporary settings 87
  using ADF 89
  using scanner glass 91
Cordless telephone (non-Brother) 61
Corona wires 158
Cover page 41
  custom comments 41
  for all faxes 42
  for next fax only 41
  printed form 42

D

Daylight saving time 26
Delayed batch transmission 44
Dialing
  dial prefix 27
Dialling
  a pause 64
  automatic fax redial 64
  groups (broadcasting) 39
  manual 63
  one touch 63
  restricting dialling 35
  speed dial 63
  using the Search key 63
Direct print 99
  Direct key 100
  specification 224
Document
  how to load 22, 23
  jam 149

Drum unit
checking (remaining life) 187
cleaning 158, 159
Dual access 43

E

EAP-FAST 231
Enlarge/Reduce key 87
Envelopes 13, 18, 19, 20
Labels 13
Equalization 141
Error messages on LCD 142
Comm. Error 143
Init Unable XX 144
No Paper 145
Out of Memory 145
Print Unable XX 146
Scan Unable XX 147
Extension telephone, using 61
External telephone, connecting 60

F

Fax codes
changing 62, 75
remote access code 75
remote activation code 61
remote deactivation code 61
Fax forwarding
changing remotely 77, 78
programming a number 72
Fax storage 73
printing from memory 51
turning off 75
turning on 73
Fax, stand-alone
receiving
Fax Detect 49
fax forwarding 78
fax receive stamp 50
from extension telephone 60, 61
into memory (fax storage) 73
polling receive 79
reducing to fit on paper 50
retrieving from a remote site 76, 78
ring delay, setting 48
sequential polling 80
telephone line interference 141
sending 38
broadcasting 39
cancelling from memory 45
contrast 42
delayed batch 44
delayed fax 44
from ADF 38
from memory (dual access) 43
from scanner glass 38
manual 45
overseas 44
polled transmit 80
real time transmission 43
resolution 42
telephone line interference 141
Fax/Tel mode
answering at extension telephones 61
F/T ring time (double-ring) 48
Fax Detect 49
receiving faxes 60
remote activation code 61
remote deactivation code 61
ring delay 48
Folio 18, 24

G

Greyscale 218, 220
Groups for broadcasting 69

H

HELP 84
Help List 84
LCD messages 193
Menu Table 193, 195
using menu keys 193
Hook key 8, 60, 61

J

Jacks
EXT
external telephone 60
TAD (answering machine) 58
Jams
document 149
paper 150

L

Labels 12, 13, 18, 21
LCD (liquid crystal display) 8, 193
  contrast 27
  Help List 83
Loading paper in the manual feed slot 12

M

Machine information
  checking remaining life of parts 187
  page counts 187
  status LED 10
Macintosh
  See Software User's Guide on the CD-ROM.
Maintenance, routine 155
  checking the remaining life of parts 187
  replacing
    belt unit 177
    drum units 173
    toner cartridge 168
    waste toner box 181
Manual
  dialling 63
  receive 47
  transmission 45
Memory
  adding DIMM (option) 123
    installing 123
  storage 193
Menu Table 193, 195
  using menu keys 193
Mode, entering
  copy 86
  fax 38
  scan 9
Multi-line connections (PBX) 59

N

N in 1 (page layout) 90
Network
  faxing
    See Software User's Guide on the CD-ROM.
  printing
    See Network User's Guide on the CD-ROM.
  scanning
    See Software User's Guide on the CD-ROM.

O

One touch
  changing 68
  setting up 65
  using 63
Out of Memory
message 45, 92, 98, 103, 145

P

Packing and shipping the machine 188
Page layout (N in 1) 90
Paper 17, 217
  how to load 11
    in manual feed slot 12
    in paper tray 11
  jam 150
  recommended 18
  size 17, 24
  size of document 219, 220
  tray capacity 18
  type 17, 24
PaperPort™ 11SE with OCR
  See Software User's Guide on the CD-ROM and Help in the PaperPort™ 11SE application to access How-to-Guides.
PC Fax
  See Software User's Guide on the CD-ROM.
PictBridge
  DPOF printing 96
  specification 223

Polling
polled transmit 80
polling receive 79
sequential polling 80
Power failure 193
Print
difficulties 125, 129
drivers 221
fax from memory 51
paper jams 150
quality 131, 134
reports 83
resolution 221
specifications 221
Printing
See Software User's Guide on the CD-ROM.
Programming your machine 193

Q

Quality
copying 88, 89
printing 131, 134
Quick dial 65
broadcasting 39
using groups 39
group dial
changing 68
setting up groups for broadcasting 69
one touch dial
changing 68
custom scan profile 65
setting up 65
using 63
search 63
speed dial
changing 68
custom scan profile 66
setting up 66
using 63

R

Redial/Pause key 64
Reducing
copies 87
incoming faxes 50
Remote retrieval 75
access code 75, 76
commands 78
getting your faxes 76
Remote setup
See Software User's Guide on the CD-ROM.
Replacing
belt unit 177
drum units 173
toner cartridge 168
waste toner box 181
Reports 82, 83
Fax Journal 83
journal period 83
Help List 83
how to print 84
Network Configuration 83
Tel Index List 83
Transmission Verification 82
User Settings 83
Resolution
copy 219
fax (standard, fine, superfine, photo) 42, 218
print 221
scan 220
setting for next fax 42
Resolution key 8, 42
Restricted users 31
Ring delay, setting 48

G

S

Scanner glass
faxing 38
using 23
Scanning
See Software User's Guide on the CD-ROM.
Secure key 8
Security
Memory Security 32
restricting dialling 35
Secure function lock
administrator password 29
Public user mode 30
restricted users 31
Setting lock 34
Serial number
how to find.....See inside front cover
Shipping the machine 188
Sleep time 26
Sort 89
Speed dial
changing 68
setting up 66
using 63
Status LED 10

T

TAD (telephone answering device), external 47
connecting 58, 59
recording OGM 59
Telephone line
connections 59
difficulties 126
interference 141
multi-line (PBX) 59
Temporary copy settings 87
Text, entering 213
Toner Save 26
Troubleshooting 125
document jam 149
error messages on LCD 142
If you are having difficulty
receiving faxes 126
if you are having difficulty
copy quality 129
incoming calls 128
network 131
paper handling 130
print quality 131, 134
printing 125, 129
scanning 130
sending faxes 128
software 130
telephone line 141
maintenance messages on LCD 142
paper jam 150

V

Volume, setting
beeper 25
ring 25
speaker 25

W

Waste toner box
replacing 181
Windows®
See Software User's Guide on the CD-ROM.
Wireless Network
See Quick Setup Guide and Network User's Guide on the CD-ROM.

For Australia Only:

Warranty & Repair – For details about warranty on your Brother Product, the details are listed on the following link: **www.brother.com.au** under Warranty. For warranty service (repair) of your Brother product you will need to retain a copy of your sales docket and contact the Support Centre for location of the nearest Authorised Warranty Centre (AWC)

Support – For technical support for your Brother Product other than what you can resolve through the User's Guide, please visit our website or our solutions website for FAQs/Troubleshooting, Drivers & Software, or contact the Product Support Centre for any technical or customer care/support enquiry.

Product Support Centre: Australia	
Brother International (Aust) Pty Ltd	
Phone:	02 8875 6000
Fax:	02 9870 7223
Email:	**productsupport@brother.com.au**
Web Site:	**www.brother.com.au**
Solutions Site:	**http://solutions.brother.com/**

Our Technical Support Consultants are available 5 days a week by phone during the hours of 8.30am to 5.00pm Monday to Friday.

For New Zealand Only:

To contact Brother International (NZ) Limited for support with a Brother product please use the following methods.

Phone:	
Premium End User Assistance	0900 552 152
Auto Attendant Self Help	0800 652 152
Brother Recycle Assistance	0800 632 467
Fax Assistance	0800 837 822
Email Assistance	Please visit www.brother.co.nz and submit a helpdesk enquiry from Online Help
Web Assistance	Please visit www.brother.co.nz under Online Help for Frequently Asked Questions, Driver downloads, Warranty information and Service Centres

Our Technical Support Consultants are available 7 days a week by phone during the hours of 8.30am to 5pm Monday to Friday and 9am to 5pm Saturday and Sunday.

Outside of these hours you can find assistance from our Auto Attendant Self Help and our Website www.brother.co.nz under Online Help.

brother®

The machine is approved for use in the country of purchase only, local Brother companies or their dealers will only support machines purchased in their own countries.