brother®

ADVANCED USER'S GUIDE

MFC-9970CDW

Version 0

ARL/ASA/NZ

User's Guides and where do I find it?

Which manual?	What's in it?	Where is it?
Safety and Legal	Read this Guide first. Please read the Safety Instructions before you set up your machine. See this Guide for trademarks and legal limitations.	Printed / In the box
Quick Setup Guide	Follow the instructions for setting up your machine and installing the drivers and software for the operating system and connection type you are using.	Printed / In the box
Basic User's Guide	Learn the basic Fax, Copy, Scan and Direct Print operations and how to replace consumables. See troubleshooting tips.	Printed / In the box
Advanced User's Guide	Learn more advanced operations: Fax, Copy, security features, printing reports and performing routine maintenance.	PDF file / Documentation CD-ROM / In the box
Software User's Guide	Follow these instructions for Printing, Scanning, Network Scanning, Remote Setup, PC-Fax, and using the Brother ControlCenter utility.	PDF file / Documentation CD-ROM / In the box
Network Glossary	This Guide provides basic information about advanced network features of Brother machines along with explanations about general networking and common terms.	PDF file / Documentation CD-ROM / In the box
Network User's Guide	This Guide provides useful information about wired and wireless network settings and security settings using the Brother machine. You can also find supported protocol information for your machine and detailed troubleshooting tips.	PDF file / Documentation CD-ROM / In the box

Table of Contents

1 General Setup 1

Memory storage 1
Set Daylight Saving Time 1
Ecology features 2
Toner Save 2
Sleep mode 2
Deep Sleep mode 3
LCD screen 3
Setting the backlight brightness 3
Setting the Dim Timer for the backlight 3
Mode Timer 4
Dial prefix 4
Setting up the prefix number 4
Changing the prefix number 5

2 Security features 6

Secure Function Lock 2.0 6
Setting and changing the Administrator Password 7
Setting up and changing the Public user mode 8
Setting up and changing restricted users 8
Turning Secure Function Lock on/off 10
Switching Users 11
Setting Lock 12
Setting up the password 12
Changing your Setting Lock password 13
Turning Setting Lock on/off 13
Restricting dialling 14
Dial pad restriction 14
One Touch restriction 14
Speed Dial restriction 14
LDAP server restriction 15

3 Sending a fax 16

Additional sending options 16
Sending faxes using multiple settings 16
Changing a 2-sided fax layout 16
Contrast 17
Changing Fax Resolution 17

Additional sending operations 18
Sending a fax manually 18
Dual access (black & white only) 18
Broadcasting (black & white only) 19
Real Time Transmission 20
Overseas Mode 21
Delayed Fax (black & white only) 21
Delayed batch transmission (black & white only) 21
Checking and cancelling waiting jobs 22
Setting your changes as the new default 22
Restoring all fax settings to the factory settings 22
Electronic cover page (black & white only) 23
Polling overview 25
Polled transmit (black & white only) 25

4 Receiving a fax 26

Remote Fax Options (black & white only) 26
Out of Paper Reception 26
Fax Forwarding 26
Fax Storage 27
PC-Fax Receive 28
Changing Remote Fax Options 29
Remote retrieval 30
Remote fax commands 32
Additional receiving operations 33
Printing a reduced incoming fax 33
Duplex (2-sided) printing for Fax mode 33
Setting the Fax Receive Stamp (black & white only) 34
Setting the Print Density 34
Printing a fax from the memory 35
Polling overview 36
Polling receive 36

5 Dialling and storing numbers 38

Additional dialling operations 38
Combining quick dial numbers 38
Additional ways to store numbers 38
Setting up Groups for Broadcasting 38
Options for Setting Up Groups 41
Changing Group numbers 42
Deleting Group numbers 43

6 Printing reports 44

Fax reports 44
Transmission verification report 44
Fax Journal 44
Reports 45
How to print a report 45

7 Making copies 46

Copy settings 46
Stop copying 46
Improving copy quality 46
Enlarging or reducing the image copied 47
Duplex (2-sided) Copying 48
Tray selection 49
Adjusting Brightness and Contrast 49
Sorting copies using the ADF 50
Making N in 1 copies (page layout) 50
2 in 1 ID Copy 52
Adjusting Colour (Saturation) 53
Setting your changes as the new default 53
Restoring all copy settings to the factory settings 53
Setting your favourites 54

A Routine maintenance 55

Cleaning and checking the machine 55
Checking the Page Counters 55
Checking the remaining life of parts 56
Replacing periodic maintenance parts 56
Packing and shipping the machine 57

B Options 67

Optional paper tray (LT-300CL) 67
Memory board 67
SO-DIMM Types 67
Installing extra memory 68

C Glossary 70

D Index 74

1 General Setup

Memory storage

Your menu settings are stored permanently, and in the event of a power failure will *not* be lost. Temporary settings (for example, Contrast, Overseas Mode) *will* be lost. Also, during a power failure the machine will retain the date and time and programed fax timer jobs (e.g. Delayed Fax) for up to 60 hours. Other fax jobs in the machine memory will not be lost.

Set Daylight Saving Time

You can set the machine to change for Daylight Saving Time. If you choose `On`, it will reset the time forward one hour and if you choose `Off`, it will reset the time backward one hour.

1. Press `MENU`.
2. Press ▲ or ▼ to display `Initial Setup`.
   Press `Initial Setup`.
3. Press ▲ or ▼ to display `Date&Time`.
   Press `Date&Time`.
4. Press `Daylight Save`.
5. Press `On` or `Off`.
6. Press **Stop/Exit**.

Ecology features

Toner Save

You can save toner using this feature. When you set Toner Save to On, prints appear lighter. The default setting is Off.

1. Press MENU.
2. Press ▲ or ▼ to display General Setup.
   Press General Setup.
3. Press ▲ or ▼ to display Ecology.
   Press Ecology.
4. Press Toner Save.
5. Press On or Off.
6. Press **Stop/Exit**.

Note

We do not recommend Toner Save for printing Photo or Greyscale images.

Sleep mode

The Sleep Mode Setting can reduce power consumption. When the machine is in Sleep Mode (Power Save mode) it acts as though it were turned off. Receiving data or starting an operation wakes up the machine from Sleep mode to Ready mode.

The timer will restart if any operation is carried out on the machine, such as receiving a fax or computer data or making a copy. The default setting is 3 minutes.

When the machine goes into Sleep mode, the LCD back light turns off.

1. Press MENU.
2. Press ▲ or ▼ to display General Setup.
   Press General Setup.
3. Press ▲ or ▼ to display Ecology.
   Press Ecology.
4. Press Sleep Time.
5. Using the dial pad on the Touchscreen, enter the length of time the machine will remain idle before entering sleep mode.
   Press OK.
6. Press **Stop/Exit**.

Deep Sleep mode

If the machine is in Sleep mode and does not receive any jobs for a certain length of time, the machine will go into Deep Sleep mode automatically. Deep Sleep mode uses less power than Sleep mode. The machine will wake up and start warming up when the machine receives a fax or computer data, or when you press the Touchscreen or a key on the control panel.

When the machine is in Deep Sleep mode, the LCD backlight is Off and the mode keys are dimmed.

If a wireless network is enabled, the machine will not enter Deep Sleep mode. To disable the wireless network, see *Chapter 5* in the *Network User's Guide*.

If the machine has secure print data it will not enter Deep Sleep mode.

LCD screen

Setting the backlight brightness

You can adjust the brightness of the LCD backlight. If you are having difficulty reading the LCD, try changing the brightness setting.

1. Press `MENU`.
2. Press ▲ or ▼ to display `General Setup`.
   Press `General Setup`.
3. Press ▲ or ▼ to display `LCD Settings`.
   Press `LCD Settings`.
4. Press `Backlight`.
5. Press `Light`, `Med` or `Dark`.
6. Press **Stop/Exit**.

Setting the Dim Timer for the backlight

You can set how long the LCD backlight stays on after you go back to the Ready screen.

1. Press `MENU`.
2. Press ▲ or ▼ to display `General Setup`.
   Press `General Setup`.
3. Press ▲ or ▼ to display `LCD Settings`.
   Press `LCD Settings`.
4. Press `Dim Timer`.
5. Press `Off`, `10 Secs`, `20 Secs` or `30 Secs`.
6. Press **Stop/Exit**.

Mode Timer

The machine has three mode keys on the control panel: **FAX**, **SCAN**, and **COPY**.

You can set how much time the machine takes after the last Copy or Scan operation to return to Fax mode. If you choose `Off`, the machine will stay in the mode you used last.

This setting also sets the time the machine will change from a restricted user to the Public mode when using Secure Function Lock. (See *Switching Users* on page 11.)

1. Press `MENU`.
2. Press ▲ or ▼ to display `General Setup`.
   Press `General Setup`.
3. Press ▲ or ▼ to display `Mode Timer`.
   Press `Mode Timer`.
4. Press `0 Sec`, `30 Secs`, `1 Min`, `2 Mins`, `5 Mins` or `Off`.
5. Press **Stop/Exit**.

Dial prefix

The Dial Prefix setting will automatically dial a predefined number before every fax number you dial. For example: If your telephone system requires a 9 to dial an outside number use this setting to automatically dial 9 for every fax you send.

Setting up the prefix number

1. Press `MENU`.
2. Press ▲ or ▼ to display `Initial Setup`.
   Press `Initial Setup`.
3. Press ▲ or ▼ to display `Dial Prefix`.
   Press `Dial Prefix`.
4. Do one of the following:
   - If you want to set the dial prefix feature to on, press `On`. Go to step ❺.
   - If you want to set the dial prefix feature to off, press `Off`. Go to step ❼.
5. Press `Dial Prefix`.
6. Enter the prefix number (up to 5 digits) by pressing the buttons on the Touchscreen.
   Press `OK`.

Note

- You can use the numbers and symbols 0 to 9, #, and ∗. (You cannot use ! with any other numbers or symbols.)
- If your telephone system requires a time break recall (hookflash), press ! to enter the break.

7. Press **Stop/Exit**.

Changing the prefix number

1. Press MENU.
2. Press ▲ or ▼ to display Initial Setup.
   Press Initial Setup.
3. Press ▲ or ▼ to display Dial Prefix.
   Press Dial Prefix.
4. Press On (or Off).
   You can turn off the prefix number by pressing Off. The prefix number will remain off until you press On.
5. Press Dial Prefix.
6. Do one of the following using the buttons on the Touchscreen.
   - To change the prefix number, press ◀ or ▶ to position the cursor under the digit to be deleted and press the Back Space button ⌫. Then press the correct digit.

     Repeat until the prefix number is correct, and then press OK.
   - To exit without making a change, press OK.

Note

- You can use the numbers and symbols 0 to 9, #, and ∗. (You cannot use ! with any other numbers or symbols.)
- If your telephone system requires a time break recall (hookflash), press ! to enter the break.

7. Press **Stop/Exit**.

2 Security features

Secure Function Lock 2.0

Secure Function Lock lets you restrict Public access to the following machine functions:

- Fax Tx
- Fax Rx
- Copy
- Scan
- Direct Print
- Print
- Color Print

This feature also prevents users from changing the Default settings of the machine by limiting access to the MENU settings.

Before using the security features you must first enter an administrator password.

Access to restricted operations can be enabled by creating a restricted user. Restricted users must enter a user password to use the machine.

Make a careful note of your password. If you forget it, you will have to reset the password stored in the machine. For information about how to reset the password call your Brother dealer for service.

Note

- Secure Function Lock can be set manually at the control panel or by using Web Based Management. We recommend using Web Based Management to configure this feature. For more information, see the *Network User's Guide*.
- Only administrators can set limitations and make changes for each user.
- Polling Receive is enabled only when both Fax Tx and Fax Rx are enabled.

Setting and changing the Administrator Password

Setting up the password

The password you set in these steps is for the administrator. This password is used to set up users and to turn Secure Function Lock on or off. (See *Setting up and changing restricted users* on page 8 and *Turning Secure Function Lock on/off* on page 10.)

Note

Make a careful note of the administrator password. If you enter the wrong password, the LCD will show `Wrong Password`. Re-enter the correct password. If you forget it, please call your Brother dealer for service.

1. Press `MENU`.
2. Press ▲ or ▼ to display `General Setup`.
   Press `General Setup`.
3. Press ▲ or ▼ to display `Security`.
   Press `Security`.
4. Press `Function Lock`.
5. Enter a four-digit number for the password by pressing the buttons on the Touchscreen.
   Press `OK`.
6. Re-enter the password when the LCD shows `Verify`.
   Press `OK`.
7. Press **Stop/Exit**.

Changing the password

1. Press `MENU`.
2. Press ▲ or ▼ to display `General Setup`.
   Press `General Setup`.
3. Press ▲ or ▼ to display `Security`.
   Press `Security`.
4. Press `Function Lock`.
5. Press `Set Password`.
6. Enter the registered four-digit password by pressing the buttons on the Touchscreen.
   Press `OK`.
7. Enter a four-digit number for the new password by pressing the buttons on the Touchscreen.
   Press `OK`.
8. Re-enter the password when the LCD shows `Verify`.
   Press `OK`.
9. Press **Stop/Exit**.

Setting up and changing the Public user mode

Public user mode restricts the functions that are available for Public users. Public users do not need to enter a password to access the features made available through this setting. You can set up one Public user.

1. Press MENU.
2. Press ▲ or ▼ to display General Setup.
   Press General Setup.
3. Press ▲ or ▼ to display Security.
   Press Security.
4. Press Function Lock.
5. Press Setup ID.
6. Enter the administrator password by pressing the buttons on the Touchscreen.
   Press OK.
7. Press ▲ or ▼ to display Public.
   Press Public.
8. Do one of the following:
   - To set up the Public user, press Enable or Disable for each operation, as follows: Press Fax Tx. Then press Enable or Disable. After you have set Fax Tx, repeat these steps for Fax Rx, Copy, Scan, Direct Print, Print and Color Print.
   - To change the Public user settings, press▲ or ▼ to display the setting you want to change. Press the setting and press Enable or Disable. Repeat this step until you finish changing settings.
9. Press **Stop/Exit**.

Setting up and changing restricted users

You can set up users with restrictions and a password for functions that are available to them. You can set up more advanced restrictions, such as by page count or PC user login name, through Web Based Management. (For more information, see the *Network User's Guide*.) You can set up to 25 restricted users with restrictions and a password.

Setting up restricted users

1. Press MENU.
2. Press ▲ or ▼ to display General Setup.
   Press General Setup.
3. Press ▲ or ▼ to display Security.
   Press Security.
4. Press Function Lock.
5. Press Setup ID.
6. Enter the four-digit administrator password by pressing the buttons on the Touchscreen.
   Press OK.
7. Press ▲ or ▼ to display User01.
   Press User01.
8. Enter the user name by pressing the buttons on the Touchscreen. (See *Entering text* in *Appendix C* of the *Basic User's Guide*.)
   Press OK.
9. Enter a four-digit user password by pressing the buttons on the Touchscreen.
   Press OK.

10 To set up a restricted user, press Enable or Disable for each operation, as follows: Press Fax Tx. Then press Enable or Disable. After you have set Fax Tx, repeat these steps for Fax Rx, Copy, Scan, Direct Print, Print and Color Print.

11 Repeat steps ❼ to ❿ for entering each additional user and password.

12 Press **Stop/Exit**.

Note

You cannot use the same name as another user's name.

Changing user name, password or settings for restricted users

1 Press MENU.

2 Press ▲ or ▼ to display General Setup.
Press General Setup.

3 Press ▲ or ▼ to display Security.
Press Security.

4 Press Function Lock.

5 Press Setup ID.

6 Enter the four-digit administrator password by pressing the buttons on the Touchscreen.
Press OK.

7 Press ▲ or ▼ to display the existing restricted user you want to change.
Press the user name.

8 Press Change.
To change the user name, enter a new user name by pressing the buttons on the Touchscreen. (See *Entering text* in *Appendix C* of the *Basic User's Guide*.)
Press OK.

9 To change the password, enter a new four-digit user password by pressing the buttons on the Touchscreen.
Press OK.

10 To change a restricted user's settings, press ▲ or ▼ to display the setting you want to change. Press the setting and then press Enable or Disable.
Repeat this step until you are finished making changes.

11 Press **Stop/Exit**.

Note

You cannot use the same name as another user's name.

Reset existing restricted users

1 Press MENU.

2 Press ▲ or ▼ to display General Setup.
Press General Setup.

3 Press ▲ or ▼ to display Security.
Press Security.

4 Press Function Lock.

5 Press Setup ID.

6 Enter the four-digit administrator password by pressing the buttons on the Touchscreen.
Press OK.

7 Press ▲ or ▼ to display the existing restricted user you want to reset.
Press the user name.

8 Press Reset.

9 Press Yes to reset the existing restricted user.

10 Press **Stop/Exit**.

Turning Secure Function Lock on/off

Turning Secure Function Lock on

1. Press MENU.
2. Press ▲ or ▼ to display General Setup.
   Press General Setup.
3. Press ▲ or ▼ to display Security.
   Press Security.
4. Press Function Lock.
5. Press Lock Off→On.
6. Enter the registered four-digit administrator password by pressing the buttons on the Touchscreen.
   Press OK.

Turning Secure Function Lock off

1. Press Public or xxxxx (where xxxxx is the user's name).
2. Press Lock On→Off.
3. Enter the registered four-digit administrator password by pressing the buttons on the Touchscreen.
   Press OK.

Note

If you enter the wrong password, the LCD will show Wrong Password. Re-enter the correct password.

Switching Users

This setting allows you to switch between registered restricted users or Public mode when Secure Function Lock is turned on.

Changing to the restricted user Mode

1. Press `Public` or `xxxxx` (where xxxxx is the user's name).
   Press `Change User`.
2. Press ▲ or ▼ to display your user name.
3. Press your user name.
4. Enter the registered four-digit user password by pressing the buttons on the Touchscreen.
   Press `OK`.

Changing to the Public Mode

1. Press `xxxxx`. (where xxxxx is the user's name.)
2. Press `Go to Public`.

Note

- After a restricted user has finished using the machine, it will return to the Public setting within the same time as the Mode Timer setting. (See *Mode Timer* on page 4.)
- If your ID has set page limit restrictions and already reached the maximum number of pages, the LCD will show `Limit Exceeded` when you print data. Contact your administrator to check your Secure Function Lock Settings.
- If your ID has set Colour Print restrictions to `Disable`, the LCD will show `No Permission` when you try to print coloured data. The machine prints the data in black & white only.

Setting Lock

Setting Lock lets you set a password to stop other people from accidentally changing your machine settings.

Make a careful note of your password. If you forget it, you will have to reset the passwords stored in the machine. Please call your administrator or your Brother dealer.

While Setting Lock is `On`, you cannot access `MENU` and `Address Book` Functions.

Also, machine settings cannot be changed through the Remote Setup utility while Setting Lock is `On`.

Setting up the password

1. Press `MENU`.
2. Press ▲ or ▼ to display `General Setup`.
   Press `General Setup`.
3. Press ▲ or ▼ to display `Security`.
   Press `Security`.
4. Press `Setting Lock`.
5. Enter a four-digit number for the password by pressing the buttons on the Touchscreen.
   Press `OK`.
6. Re-enter the password when the LCD shows `Verify`.
   Press `OK`.
7. Press **Stop/Exit**.

Changing your Setting Lock password

1. Press MENU.
2. Press ▲ or ▼ to display General Setup.
   Press General Setup.
3. Press ▲ or ▼ to display Security.
   Press Security.
4. Press Setting Lock.
5. Press Set Password.
6. Enter the registered four-digit password by pressing the buttons on the Touchscreen.
   Press OK.
7. Enter a four-digit number for the new password by pressing the buttons on the Touchscreen.
   Press OK.
8. Re-enter the password when the LCD shows Verify.
   Press OK.
9. Press **Stop/Exit**.

Turning Setting Lock on/off

If you enter the wrong password when following the instructions below, the LCD will show Wrong Password. Re-enter the correct password.

Turning Setting Lock on

1. Press MENU.
2. Press ▲ or ▼ to display General Setup.
   Press General Setup.
3. Press ▲ or ▼ to display Security.
   Press Security.
4. Press Setting Lock.
5. Press Lock Off→On.
6. Enter the registered four-digit administrator password by pressing the buttons on the Touchscreen.
   Press OK.

Turning Setting Lock off

1. Press Setting Lock on the LCD.
2. Enter the registered four-digit administrator password by pressing the buttons on the Touchscreen.
   Press OK.

Restricting dialling

This feature is to prevent users from sending a fax or call to a wrong number by mistake. You can set the machine to restrict dialling by using the dial pad, One Touch and Speed Dial.

If you choose `Off`, the machine does not restrict the dialling method.

If you choose `Enter # twice`, the machine will prompt you to re-enter the number, and then if you re-enter the same number correctly, the machine will start dialling. If you re-enter the wrong number, the LCD will show an error message.

If you choose `On`, the machine will restrict all fax sending and outbound calls for that dialling method.

Dial pad restriction

1. Press `MENU`.
2. Press ▲ or ▼ to display `Fax`.
   Press `Fax`.
3. Press ▲ or ▼ to display
   `Dial Restrict`.
   Press `Dial Restrict`.
4. Press `Dial Pad`.
5. Press `Off`, `Enter # twice` or `On`.
6. Press **Stop/Exit**.

One Touch restriction

1. Press `MENU`.
2. Press ▲ or ▼ to display `Fax`.
   Press `Fax`.
3. Press ▲ or ▼ to display
   `Dial Restrict`.
   Press `Dial Restrict`.
4. Press `One Touch Dial`.
5. Press `Off`, `Enter # twice` or `On`.
6. Press **Stop/Exit**.

Speed Dial restriction

1. Press `MENU`.
2. Press ▲ or ▼ to display `Fax`.
   Press `Fax`.
3. Press ▲ or ▼ to display
   `Dial Restrict`.
   Press `Dial Restrict`.
4. Press `Speed Dial`.
5. Press `Off`, `Enter # twice` or `On`.
6. Press **Stop/Exit**.

LDAP server restriction

1. Press MENU.
2. Press ▲ or ▼ to display Fax.
   Press Fax.
3. Press ▲ or ▼ to display
   Dial Restrict.
   Press Dial Restrict.
4. Press LDAP Server.
5. Press Off, Enter # twice or On.
6. Press **Stop/Exit**.

Note

- The Enter # twice setting will not work if you lift an external handset or press **Hook** before entering the number. You will not be asked to re-enter the number.
- The machine cannot restrict dialling from **Redial/Pause**.
- If you chose On or Enter # twice, you cannot use the Broadcasting feature and cannot combine quick dial numbers when dialling.

3 Sending a fax

Additional sending options

Sending faxes using multiple settings

Before you send a fax, you can change any combination of these settings: duplex fax, contrast, resolution, overseas mode, delayed fax timer, polling transmission, real time transmission, broadcast, glass scan size or cover page settings.

1. Press (**FAX**).
   The LCD shows:

2. Press ◀ or ▶ to display a setting you want to change and press the setting, then press the option you want.
3. Do one of the following:
   - Repeat step ❷ to change more settings.
   - If you are finished choosing settings, go to the next step for sending your fax.

Note

- Most settings are temporary and the machine returns to its default settings after you send a fax.
- You can save some of the settings you use most often by setting them as the default. These settings will stay until you change them again. (See *Setting your changes as the new default* on page 22.)

Changing a 2-sided fax layout

You need to choose the duplex scanning format before you send a 2-sided fax. The format you choose will depend on the layout of your 2-sided document.

1. Press (**FAX**).
2. Press ◀ or ▶ to display `Duplex Fax`.
   Press `Duplex Fax`.
3. Do one of the following:
   - If your document is flipped on the Long edge, press `DuplexScan :LongEdge`.

Long edge	
Portrait	Landscape
	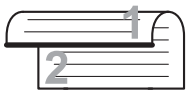

   - If your document is flipped on the Short edge, press `DuplexScan :ShortEdge`.

Short edge	
Portrait	Landscape
	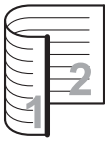

4. Press **Stop/Exit**.

Contrast

For most documents the default setting of Auto will give the best results. Auto automatically chooses the suitable contrast for your document.

If your document is very light or very dark, changing the contrast may improve the quality of the fax.

Use Dark to make the faxed document lighter.

Use Light to make the faxed document darker.

1. Press (**FAX**).
2. Press ◀ or ▶ to display Contrast. Press Contrast.
3. Press Auto, Light or Dark.

Note

Even if you choose Light or Dark, the machine will send the fax using the Auto setting if you choose Photo as the Fax Resolution.

Changing Fax Resolution

The quality of a fax can be improved by changing the Fax Resolution. Resolution can be changed for the next fax.

1. Press (**FAX**).
2. Press ◀ or ▶ to display Fax Resolution. Press Fax Resolution.
3. Press Standard, Fine, S.Fine or Photo.

Note

You can choose four different resolution settings for black & white faxes and two for colour.

Black & white	
Standard	Suitable for most typed documents.
Fine	Good for small print and transmits a little slower than Standard resolution.
S.Fine	Good for small print or artwork and transmits slower than Fine resolution.
Photo	Use when the document has varying shades of grey or is a photograph. This has the slowest transmission time.

Colour	
Standard	Suitable for most typed documents.
Fine	Use when the document is a photograph. The transmission time is slower than Standard resolution.

If you choose S.Fine or Photo and then use the **Colour Start** key to send a fax, the machine will send the fax using the Fine setting.

The time taken to send will increase when selecting S.Fine or Photo.

Additional sending operations

Sending a fax manually

Manual transmission

Manual transmission lets you hear the dialling, ringing and fax-receiving tones while sending a fax.

1. Make sure you are in Fax mode (**FAX**).
2. Load your document.
3. Press **Hook** and listen for a dial tone. Or pick up the handset of an external telephone and listen for a dial tone.
4. Dial the fax number you want to call.
5. When you hear the fax tones, press **Mono Start** or **Colour Start**.
   - If you are using the scanner glass, press `Send`.
6. Replace the handset of an external telephone.

Dual access (black & white only)

You can dial a number, and start scanning the fax into memory—even when the machine is sending from memory, receiving faxes or printing PC data. The LCD will show the new job number.

The number of pages you can scan into the memory will vary depending on the data that is printed on them.

Note

If you get an `Out of Memory` message while scanning the first page of a fax, press **Stop/Exit** to cancel scanning. If you get an `Out of Memory` message while scanning a subsequent page, you can press **Mono Start** to send the pages scanned so far, or press **Stop/Exit** to cancel the operation.

Broadcasting (black & white only)

Broadcasting lets you send the same fax message to more than one fax number. You can include Groups, One Touch, Speed Dial numbers and up to 50 manually dialled numbers in the same broadcast.

You can broadcast to up to 390 different numbers. This will depend on how many groups, access codes or credit card numbers you have stored, and on how many delayed or stored faxes in memory.

Before you begin the broadcast

One Touch and Speed Dial numbers must be stored in the machine's memory before they can be used in a broadcast. (See *Storing One Touch Dial numbers* and *Storing Speed Dial numbers* in *Chapter 7* of the *Basic User's Guide*.)

Group numbers must also be stored in the machine's memory before they can be used in a broadcast. Group numbers include many stored One Touch Dial and Speed Dial numbers for easier dialling. (See *Setting up Groups for Broadcasting* on page 38.)

How to broadcast a fax

Note

To help you choose numbers easily, press `Address Book` or (Search).

1. Press (**FAX**).
2. Load your document.
3. Press ◀ or ▶ to display `Broadcasting`. Press `Broadcasting`.
4. You can add numbers to the broadcast in the following ways:
   - Press `Manual` and enter a number by pressing the buttons on the Touchscreen. (See *How to dial* in *Chapter 7* of the *Basic User's Guide*.)

     Press `OK`.
   - Press `Address Book`. Press A001 A to search by Alphabetical Order or Numerical Order. Put a check in the check box beside each number you want to include in the broadcast.

     Press `OK`.

Note

One Touch Dial numbers begin with ∗. Speed Dial numbers begin with #.

5. After you have entered all the fax numbers by repeating step ❹, press `OK`.
6. Press **Mono Start**.

After the broadcast is finished the machine will print a broadcast report to let you know the results.

Note

The scan profile of the One Touch, Speed Dial or Group number you chose *first* will be applied to the broadcast.

Cancelling a Broadcast in progress

While broadcasting you can cancel the fax currently being sent or the whole broadcast job.

1. Press**Stop/Exit**.
2. Do one of the following:
   - To cancel the entire broadcast, press `Entire Broadcast`. Go to step ❸.
   - To cancel the current job, press the button that displays the number being dialled. Go to step ❹.
   - To exit without cancelling, press **Stop/Exit**.
3. When the LCD asks if you want to cancel the entire broadcast, do one of the following:
   - Press `Yes` to confirm.
   - To exit without cancelling, press `No` or **Stop/Exit**.
4. Do one of the following:
   - To cancel the current job, press `Yes`.
   - To exit without cancelling, press `No` or **Stop/Exit**.

Real Time Transmission

When you are sending a fax, the machine will scan the documents into the memory before sending it. Then, as soon as the telephone line is free, the machine will start dialling and sending.

Sometimes, you may want to send an important document immediately, without waiting for memory transmission. You can turn on `Real Time TX`.

Note

- If the memory is full and you are sending a black and white fax from the ADF, the machine will send the document in real time (even if Real Time TX is set to Off). If the memory is full, faxes from the scanner glass cannot be sent until you clear some of the memory.
- In Real Time Transmission, the automatic redial feature does not work when using the scanner glass.

1. Press (**FAX**).
2. Load your document.
3. Press ◀ or ▶ to display `Real Time TX`. Press `Real Time TX`.
4. Press `On`.

Overseas Mode

If you are having difficulty sending a fax overseas due to a bad connection, then turning on Overseas Mode may help.

This is a temporary setting, and will only be active for your next fax.

1. Press (**FAX**).
2. Load your document.
3. Press ◀ or ▶ to display `Overseas Mode`.
   Press `Overseas Mode`.
4. Press `On`.

Delayed Fax (black & white only)

You can store up to 50 faxes in the memory to be sent within a twenty-four hour period.

1. Press (**FAX**).
2. Load your document.
3. Press ◀ or ▶ to display `Delayed Fax`.
   Press `Delayed Fax`.
4. Press `On`.
5. Enter the time you want the fax to be sent (in 24-hour format) by pressing the buttons on the Touchscreen. (For example, enter 19:45 for 7:45 PM.)
   Press `OK`.

Note

The number of pages you can scan into the memory depends on the amount of data printed on each page.

Delayed batch transmission (black & white only)

Before sending the delayed faxes, your machine will help you economize by sorting all the faxes in the memory by destination and scheduled time.

All delayed faxes that are scheduled to be sent at the same time to the same fax number will be sent as one fax to save transmission time.

1. Press `MENU`.
2. Press ▲ or ▼ to display `Fax`.
   Press `Fax`.
3. Press ▲ or ▼ to display `Setup Send`.
   Press `Setup Send`.
4. Press `Batch TX`.
5. Press `On` or `Off`.
6. Press **Stop/Exit**.

Checking and cancelling waiting jobs

Check which jobs are still waiting in the memory to be sent. If there are no jobs, the LCD will show `No Jobs Waiting`. You can cancel a fax job that is stored and waiting in the memory.

1. Press `MENU`.
2. Press ▲ or ▼ to display `Fax`.
   Press `Fax`.
3. Press ▲ or ▼ to display `Remaining Jobs`.
   Press `Remaining Jobs`.
   Jobs that are waiting will appear on the LCD.
4. Press ▲ or ▼ to scroll through the jobs and press the job you want to cancel.
   Press `OK`.
5. Do one of the following:
   - To cancel, press `Yes`. If you want to cancel another job go to step ❹.
   - To exit without cancelling, press `No`.
6. When you have finished cancelling jobs, press **Stop/Exit**.

Setting your changes as the new default

You can save the fax settings for `Fax Resolution`, `Contrast`, `Real Time TX`, `Glass ScanSize` and `Coverpage Setup` you use most often by setting them as the default. These settings will stay until you change them again.

1. Press (**FAX**).
2. Press ◀ or ▶ to choose the setting you want to change, and then press the new option.
   Repeat this step for each setting you want to change.
3. After changing the last setting, press ◀ or ▶ to display `Set New Default`.
   Press `Set New Default`.
4. Press `Yes`.
5. Press **Stop/Exit**.

Restoring all fax settings to the factory settings

You can restore all the fax settings you have changed to the factory settings. These settings will stay until you change them again.

1. Press (**FAX**).
2. After changing the last setting, press ◀ or ▶ to display `Factory Reset`.
   Press `Factory Reset`.
3. Press `Yes`.
4. Press **Stop/Exit**.

Electronic cover page (black & white only)

This feature will *not* work unless you have already programmed your Station ID. (See the *Quick Setup Guide*.)

You can automatically send a cover page with every fax. Your cover page includes your Station ID, a comment, and the name (or number) stored in the One Touch or Speed Dial memory.

By choosing `On` you can also display the number of pages on the cover page.

You can choose one of the following preset comments.

`1.Note Off`

`2.Please Call`

`3.Urgent`

`4.Confidential`

Instead of using one of the preset comments, you can enter two personal messages of your own, up to 27 characters long. Use the chart on *Entering text* in *Appendix C* of the *Basic User's Guide* for help entering characters.

(See *Composing your own comments* on page 23.)

`5.`(User Defined)

`6.`(User Defined)

Composing your own comments

You can set up two comments of your own.

1. Press `MENU`.
2. Press ▲ or ▼ to display `Fax`.
   Press `Fax`.
3. Press ▲ or ▼ to display `Setup Send`.
   Press `Setup Send`.
4. Press `Coverpage Setting`.
5. Press `Coverpage Note`.
6. Press `5.` or `6.` to store your own comment.
7. Enter your own comment by pressing the buttons on the Touchscreen.
   Press `OK`.
   Use the chart on *Entering text* in *Appendix C* of the *Basic User's Guide* for help entering characters.
8. Press **Stop/Exit**.

Send a cover page for all faxes

You can set the machine to send a cover page whenever you send a fax.

1. Press (**FAX**).
2. Press ◀ or ▶ to display `Coverpage Setup`.
   Press `Coverpage Setup`.
3. Press `On` (or `Off`).
4. Press the comment you want to add.
5. Enter two digits to show the number of pages you are sending.
   Press `OK`.
   For example, enter `0`, `2` for 2 pages or `0`, `0` to leave the number of pages blank.
   If you make a mistake, press `Clear` to back up and re-enter the number of pages.

Using a printed cover page

If you want to use a printed cover page that you can write on, you can print the sample page and attach it to your fax.

1. Press `MENU`.
2. Press ▲ or ▼ to display `Fax`.
   Press `Fax`.
3. Press ▲ or ▼ to display `Setup Send`.
   Press `Setup Send`.
4. Press `Coverpage Setting`.
5. Press `Print Sample`.
6. Press **Mono Start** or **Colour Start**.
7. After the machine prints a copy of your cover page, press **Stop/Exit**.

Polling overview

Polling lets you set up your machine so other people can receive faxes from you, but they pay for the call. It also lets you call somebody else's fax machine and receive a fax from it, so you pay for the call. The polling feature needs to be set up on both machines for this to work. Not all fax machines support polling.

Polled transmit (black & white only)

Polled transmit lets you set up your machine to wait with a document so another fax machine can call and retrieve it.

Setup for polled transmit

1. Press (**FAX**).
2. Load your document.
3. Press ◀ or ▶ to display `Polled TX`. Press `Polled TX`.
4. Press `Standard`.
5. Press **Mono Start**.
6. If you are using the scanner glass, the LCD will prompt you to choose one of the following options:
   - Press `Yes` to scan another page. Go to step ❼.
   - Press `No` or **Mono Start** to send the document.
7. Place the next page on the scanner glass and press **Mono Start**. Repeat steps ❻ and ❼ for each additional page.
8. Your machine will automatically send the fax.

Note

The document will be stored and can be retrieved from any other fax machine until you delete the fax from memory.

To delete the fax from memory, press `MENU`, `Fax`, `Remaining Jobs`. (See *Checking and cancelling waiting jobs* on page 22.)

Setup for polled transmit with a secure code

Secure polling lets you restrict who can get the documents you set up to be polled. Secure polling only works with Brother fax machines. If another person wants to retrieve a fax from your machine they will have to enter the secure code.

1. Press (**FAX**).
2. Load your document.
3. Press ◀ or ▶ to display `Polled TX`. Press `Polled TX`.
4. Press `Secure`.
5. Enter a four-digit number. Press `OK`.
6. Press **Mono Start**.
7. If you are using the scanner glass, the LCD will prompt you to choose one of the following options:
   - Press `Yes` to scan another page. Go to step ❽.
   - Press `No` or **Mono Start** to send the document.
8. Place the next page on the scanner glass and press **Mono Start**. Repeat steps ❼ and ❽ for each additional page.
9. Your machine will automatically send the fax.

4 Receiving a fax

Remote Fax Options (black & white only)

Remote Fax Options are NOT available for colour faxes.

Remote Fax Options let you receive faxes while you are away from the machine.

You can use *only one* Remote Fax Option at a time.

Out of Paper Reception

As soon as the paper tray becomes empty during fax reception, the LCD shows `No Paper`. Put some paper in the paper tray. (See *Loading paper and print media* in *Chapter 2* of the *Basic User's Guide*.)

The machine will carry on receiving the fax, with the remaining pages being stored in memory, if enough memory is available.

Incoming faxes will continue to be stored in the memory until the memory becomes full or paper is loaded in the paper tray. When the memory is full the machine will stop automatically answering calls. To print the faxes, put fresh paper in the tray.

Fax Forwarding

The Fax Forwarding feature lets you automatically forward your received faxes to another machine. If you choose Backup Print On, the machine will also print the fax.

1. Press `MENU`.
2. Press ▲ or ▼ to display `Fax`.
   Press `Fax`.
3. Press ▲ or ▼ to display `Setup Receive`.
   Press `Setup Receive`.
4. Press ▲ or ▼ to display `Forward/Store`.
   Press `Forward/Store`.
5. Press `Fax Forward`.
6. Do one of the followings:
   - Press `Manual` to enter the forwarding fax number (up to 20 characters) or E-mail address (up to 60 characters) using the buttons on the Touchscreen. (See *Entering text* in *Appendix C* of the *Basic User's Guide*.)

     Press `OK`.
   - Press `Address Book`.

     Press ▲ or ▼ to scroll until you find the fax number or E-mail address you want your faxes to be forward to.

     Press the fax number or E-mail address you want to use.

Note

- You can enter an E-mail address by pressing on the Touchscreen.
- You can display your stored numbers and E-mail addresses in alphabetical order by pressing #001 A on the Touchscreen.
- You cannot enter a forwarding number using a One Touch key on the control panel.
- Depending on the E-mail address you choose, you will be asked for the File Type. Choose `TIFF` or `PDF` and go to step ❼.
- If you choose a Group number from the Address Book, the faxes will be forwarded to multiple fax numbers.

7 Press `Backup Print:On` or `Backup Print:Off`.

IMPORTANT

If you choose Backup Print On, the machine will also print received faxes at your machine so you will have a copy. This is a safety feature in case there is a power failure before the fax is forwarded or a problem at the receiving machine.

8 Press **Stop/Exit**.

Fax Storage

The Fax Storage feature lets you store your received faxes in the machine's memory. You can retrieve stored fax messages from a fax machine at another location using the remote retrieval commands. (See *Retrieving fax messages* on page 31.) Your machine will automatically print a copy of the stored fax.

1 Press `MENU`.

2 Press ▲ or ▼ to display `Fax`.
Press `Fax`.

3 Press ▲ or ▼ to display `Setup Receive`.
Press `Setup Receive`.

4 Press ▲ or ▼ to display `Forward/Store`.
Press `Forward/Store`.

5 Press `Fax Storage`.

6 Press **Stop/Exit**.

PC-Fax Receive

If you turn on the PC-Fax Receive feature your machine will store received faxes in memory and send them to your PC automatically. You can then use your PC to view and store these faxes.

Even if you have turned off your PC (at night or the weekend, for example), your machine will receive and store your faxes in its memory. The number of received faxes that are stored in the memory will appear on the LCD.

When you start your PC and the PC-Fax Receiving software runs, your machine transfers your faxes to your PC automatically.

To transfer the received faxes to your PC you must have the PC-FAX Receiving software running on your PC. (For details, see *PC-FAX Receiving* in the *Software User's Guide*.)

1. Press `MENU`.
2. Press ▲ or ▼ to display `Fax`.
   Press `Fax`.
3. Press ▲ or ▼ to display `Setup Receive`.
   Press `Setup Receive`.
4. Press ▲ or ▼ to display `Forward/Store`.
   Press `Forward/Store`.
5. Press `PC Fax Receive`.
6. The LCD gives you options that you have set up in the PC-Fax receiving program on your PC. If you started the PC-FAX Receiving program on your computer, press `OK`. (See *PC-FAX Receiving* in the *Software User's Guide*.)
7. Press ▲ or ▼ to choose `<USB>` or your computer name if the machine is connected to a network.
   Press `OK`.
8. Press `Backup Print:On` or `Backup Print:Off`.
9. Press **Stop/Exit**.

IMPORTANT

If you choose Backup Print On, the machine will also print the fax at your machine so you will have a copy. This is a safety feature in case there is a power failure before the fax is forwarded or a problem at the receiving machine.

Note

- Before you can set up PC-Fax Receive you must install the MFL-Pro Suite software on your PC. Make sure your PC is connected and turned on. (For details see *PC-FAX Receiving* in the *Software User's Guide*.)
- If your machine has a problem and is unable to print faxes in memory, you can use this setting to transfer your faxes to a PC. (For details, see *Transferring your faxes or Fax Journal report* in *Appendix B* of the *Basic User's Guide*.)
- PC-Fax Receive is not supported in Mac OS.
- Even if you have turned on the PC-Fax Receive feature, colour faxes will not be transferred to your PC. The machine prints received colour faxes.

Changing Remote Fax Options

If received faxes are left in your machine's memory when you change to another Remote Fax Option, the LCD will ask you one of the following questions:

- `Erase All Doc?`
- `Print All Fax?`
  - If you press `Yes`, faxes in the memory will be erased or printed before the setting changes. If a backup copy has already been printed it will not be printed again.
  - If you press `No`, faxes in the memory will not be erased or printed and the setting will be unchanged.

If received faxes are left in the machine's memory when you change to `PC Fax Receive` from another remote fax option (`Fax Forward` or `Fax Storage`), the LCD will ask you the following question:

- `Send Fax to PC?`
  - If you press `Yes`, faxes in the memory will be sent to your PC before the setting changes.
  - If you press `No`, faxes in the memory will not be erased or transferred to your PC and the setting will be unchanged.
- `Backup Print:On`
  `Backup Print:Off`

  Press `Backup Print:On` or `Backup Print:Off`.

IMPORTANT

If you choose Backup Print On, the machine will also print received faxes at your machine so you will have a copy. This is a safety feature in case there is a power failure before the fax is forwarded or a problem at the receiving machine.

Turning off Remote Fax Options

1. Press `MENU`.
2. Press ▲ or ▼ to display `Fax`.
   Press `Fax`.
3. Press ▲ or ▼ to display `Setup Receive`.
   Press `Setup Receive`.
4. Press ▲ or ▼ to display `Forward/Store`.
   Press `Forward/Store`.
5. Press `Off`.

Note

The LCD will give you more options if there are received faxes still in your machine's memory. (See *Changing Remote Fax Options* on page 29.)

6. Press **Stop/Exit**.

Remote retrieval

The remote retrieval feature lets you retrieve your stored fax messages when you are not at the machine. You can call your machine from any touch tone phone or fax machine, then use the Remote Access Code to retrieve your messages.

Setting a Remote Access Code

The Remote Access Code feature lets you access the remote retrieval features when you are away from your machine. Before you use the remote access and retrieval features, you have to set up your own code. The default code is the inactive code: – – –*.

1. Press MENU.
2. Press ▲ or ▼ to display Fax.
   Press Fax.
3. Press ▲ or ▼ to display Remote Access.
   Press Remote Access.
4. Enter a three-digit code using the numbers 0 – 9, * or #.
   Press OK.
5. Press **Stop/Exit**.

Note

DO NOT use the same code used for your Remote Activation code (*51 (*91 for New Zealand)) or Remote Deactivation code (#51 (#91 for New Zealand)).(See *Using Remote Codes* in *Chapter 6* of the *Basic User's Guide*.)

You can change your code at any time. If you want to make your code inactive, press Clear and OK in ❹ to restore the default setting – – –*.

Using your Remote Access Code

1. Dial your fax number from a telephone or another fax machine using touch tone dialling.
2. When your machine answers, during a period of silence enter your Remote Access Code
3. The machine signals if it has received messages:
   - *No beeps*

     No messages received.
   - *1 long beep*

     Fax message received.
4. The machine gives two short beeps to tell you to enter a command. The machine will hang up if you wait longer than 30 seconds before entering a command. If you enter an invalid command the machine will beep three times.
5. Press **9 0** to reset the machine when you have finished.
6. Hang up.

Note

If your machine is set to Manual mode, you can still access the remote retrieval features. Dial the fax number as normal and let the machine ring. After 100 seconds you will hear a long beep to tell you to enter the remote access code. You will then have 30 seconds to enter the code.

Retrieving fax messages

1. Dial your fax number from a telephone or another fax machine using touch tone dialling.
2. When your machine answers, during a period of silence enter your Remote Access Code (3 digits followed by ∗). If you hear one long beep, you have messages.
3. When you hear two short beeps, use the dial pad to press **9 6 2**.
4. Wait for a long beep, and then use the dial pad to enter the number of the remote fax machine where you want your fax messages sent, followed by **##** (up to 20 digits).
5. Hang up after you hear your machine beep. Your machine will call the other machine, which will then print your fax messages.

Note

You can insert a pause in a fax number by using the # key.

Changing the Fax Forwarding number

You can change the default setting of your fax forwarding number from another telephone or fax machine using touch tone dialling.

1. Dial your fax number from a telephone or another fax machine using touch tone dialling.
2. When your machine answers, immediately enter your Remote Access Code (3 digits followed by ∗) during a period of silence. If you hear one long beep, you have messages.
3. When you hear two short beeps, use the dial pad to press **9 5 4**.
4. Wait for a long beep, and then use the dial pad to enter the new number of the remote fax machine where you want your fax messages forwarded followed by **##** (up to 20 digits).
5. Press **9 0** to reset the machine when you have finished.
6. Hang up after you hear your machine beep.

Note

You can insert a pause in a fax number by using the # key.

Remote fax commands

Follow the commands below to access features when you are away from the machine. When you call the machine and enter your Remote Access Code (3 digits followed by ∗), the system will give two short beeps and you must enter a remote command.

Remote commands		Operation details
95	**Change the fax forwarding or fax storage settings**	
	1 OFF	You can choose `Off` after you have retrieved or erased all your messages.
	2 Fax Forwarding	One long beep means the change is accepted. If you hear three short beeps, you cannot change because the conditions have not been met (for example, registering a fax forwarding number). You can register the maximum number of rings. (See *Changing the Fax Forwarding number* on page 31.) Once you have registered the number, fax forwarding will work.
	4 Fax Forwarding number	
	6 Fax Storage	
96	**Retrieve a fax**	
	2 Retrieve all faxes	Enter the number of a remote fax machine to receive stored fax messages. (See *Retrieving fax messages* on page 31.)
	3 Erase faxes from the memory	If you hear one long beep, fax messages have been erased from the memory.
97	**Check the receiving status**	
	1 Fax	You can check whether your machine has received any faxes. If yes, you will hear one long beep. If no, you will hear three short beeps.
98	**Change the Receive Mode**	
	1 External TAD	If you hear one long beep, your change has been accepted.
	2 Fax/Tel	
	3 Fax Only	
90	**Exit**	Press **9 0** to exit remote retrieval. Wait for the long beep, then replace the handset.

Additional receiving operations

Printing a reduced incoming fax

If you choose On, the machine automatically reduces each page of an incoming fax to fit on one page of A4, Letter, Legal or Folio size paper.

The machine calculates the reduction ratio by using the page size of the fax and your Paper Size setting (MENU, General Setup, Tray Setting, Tray Use:Fax). See *Paper Size and Type* in *Chapter 2* of the *Basic User's Guide*.

1. Press MENU.
2. Press ▲ or ▼ to display Fax.
   Press Fax.
3. Press ▲ or ▼ to display Setup Receive.
   Press Setup Receive.
4. Press ▲ or ▼ to display Auto Reduction.
   Press Auto Reduction.
5. Press On or Off.
6. Press **Stop/Exit**.

Duplex (2-sided) printing for Fax mode

Your machine can automatically print received faxes onto both sides of the paper when Duplex is set to On.

You can use A4 size paper for this function (60 to 105 gsm).

1. Press MENU.
2. Press ▲ or ▼ to display Fax.
   Press Fax.
3. Press ▲ or ▼ to display Setup Receive.
   Press Setup Receive.
4. Press ▲ or ▼ to display Duplex.
   Press Duplex.
5. Press On or Off.
6. Press **Stop/Exit**.

Note

- When Duplex is turned on incoming faxes will automatically be reduced to fit the size of paper in the paper tray.
- When Duplex is set to On, the LCD displays 1 2 (Duplex icon).

Setting the Fax Receive Stamp (black & white only)

You can set the machine to print the received date and time in the top centre of each received fax page.

1. Press `MENU`.
2. Press ▲ or ▼ to display `Fax`.
   Press `Fax`.
3. Press ▲ or ▼ to display `Setup Receive`.
   Press `Setup Receive`.
4. Press ▲ or ▼ to display `Fax Rx Stamp`.
   Press `Fax Rx Stamp`.
5. Press `On` or `Off`.
6. Press **Stop/Exit**.

Note

- The received time and date will not appear when using Internet Fax.
- Make sure you have set the current date and time in the machine. (See the *Quick Setup Guide*.)

Setting the Print Density

You can adjust the Print Density setting to make your printed pages darker or lighter.

1. Press `MENU`.
2. Press ▲ or ▼ to display `Fax`.
   Press `Fax`.
3. Press ▲ or ▼ to display `Setup Receive`.
   Press `Setup Receive`.
4. Press ▲ or ▼ to display `Print Density`.
   Press `Print Density`.
5. Press ▶ to make the print darker.
   Or, press ◀ to make the print lighter.
   Press `OK`.
6. Press **Stop/Exit**.

Printing a fax from the memory

If you are using the Fax Storage feature (MENU, Fax, Setup Receive, Forward/Store), you can still print a fax from the memory when you are at your machine. (See *Fax Storage* on page 27.)

1. Press MENU.
2. Press ▲ or ▼ to display Fax.
   Press Fax.
3. Press ▲ or ▼ to display Print Document.
   Press Print Document.
4. Press **Mono Start**.
5. Press **Stop/Exit**.

Polling overview

Polling lets you set up your machine so other people can receive faxes from you, but they pay for the call. It also lets you call somebody else's fax machine and receive a fax from it, so you pay for the call. The polling feature needs to be set up on both machines for this to work. Not all fax machines support polling.

Polling receive

Polling receive lets you call another fax machine to receive a fax.

1. Press (**FAX**).
2. Press ◀ or ▶ to display `Polling RX`.
   Press `Polling RX`.
3. Press `Standard`.
4. Enter the fax number you are polling using One Touch, Speed Dial, or the dial pad. Press **Mono Start** or **Colour Start**.

Secure polling

Secure polling lets you restrict who can get the documents you set up to be polled. Secure polling only works with Brother fax machines. If you want to get a fax from a secured Brother machine you have to enter the secure code.

1. Press (**FAX**).
2. Press ◀ or ▶ to display `Polling RX`.
   Press `Polling RX`.
3. Press `Secure`.
4. Enter a four-digit number.
   Press `OK`.
5. Enter the fax number you are polling.
   Press **Mono Start** or **Colour Start**.

Delayed polling

Delayed polling lets you set the machine to begin polling receive at a later time. You can only set up *one* delayed polling operation.

1. Press (**FAX**).
2. Press ◀ or ▶ to display `Polling RX`.
   Press `Polling RX`.
3. Press `Timer`.
4. Enter the time (in 24-hour format) you want to begin polling.
   For example, enter 21:45 for 9:45 PM.
   Press `OK`.
5. Enter the fax number you are polling.
   Press **Mono Start** or **Colour Start**.
   The machine makes the polling call at the time you entered.

Note

If the other fax machine that you are calling has not been set-up for Polling, you will receive the message `Connection Fail`.

Sequential polling

Sequential polling lets you request documents from several fax machines in one operation.

1. Press (**FAX**).
2. Press ◀ or ▶ to display `Polling RX`.
   Press `Polling RX`.
3. Press `Standard`, `Secure` or `Timer`.

4 Choose one of the options below.

- If you choose `Standard` go to step ❺.
- If you choose `Secure`, enter a four-digit number, press `OK`, go to step ❺.
- If you chose `Timer`, enter the time (in 24-hours format) you want to begin polling and press `OK`, go to step ❺.

Note

If you did not enter the correct Secure Code, you will receive the message `Disconnected`.

5 Press ◀ or ▶ to display `Broadcasting`. Press `Broadcasting`.

6 Do one of the following:

- Press `Manual` and enter a number by pressing the buttons on the Touchscreen.

  Press `OK`.

- Press `Address Book`. Press #001 A to choose Alphabetical Order or Numerical Order. Press ▲ or ▼ to select a number.

  Press `OK`.

Note

One Touch Dial numbers begin with ∗. Speed Dial numbers begin with #.

7 After you have entered all the fax numbers by repeating step ❻, press `OK`.

8 Press **Mono Start**.
The machine polls each number or Group number in turn for a document.

Press **Stop/Exit** while the machine is dialling to cancel the polling process.

To cancel all sequential polling receive jobs, see *Cancelling a Sequential Polling Job* on page 37.

Cancelling a Sequential Polling Job

1 Press **Stop/Exit**.

2 Do one of the following:

- To cancel the entire sequential polling job, press `Entire Seq. Poll`. Go to step ❸.
- To cancel the current job, press the button that displays the number being dialled. Go to step ❹.
- To exit without cancelling, press **Stop/Exit**.

3 When the LCD asks if you want to cancel the entire sequential polling job, do one of the following:

- Press `Yes` to confirm.
- To exit without cancelling, press `No` or **Stop/Exit**.

4 Do one of the following:

- To cancel the current job, press `Yes`.
- To exit without cancelling, press `No` or **Stop/Exit**.

5 Dialling and storing numbers

Additional dialling operations

Combining quick dial numbers

Sometimes you may want to choose from several long distance carriers when you send a fax. Rates may vary depending on the time and destination. To take advantage of low rates, you can store the access codes of long distance carriers and credit card numbers as One Touch and Speed Dial numbers. You can store these long dialling sequences by dividing them and setting them up as separate One Touch and Speed Dial numbers in any combination. You can even include manual dialling using the dial pad. See *Storing numbers* in *Chapter 7* of the *Basic User's Guide*.

For example, you might have stored ‘555’ in Speed Dial #003 and ‘7000’ in Speed Dial #002. You can use them both to dial ‘555-7000’ if you press the following keys:

Press `Address Book`, `#003` and `Send a fax`.

Press `Address Book`, `#002`, `Send a fax` and **Mono Start** or **Colour Start**.

Numbers can be added manually by entering them on the dial pad:

Press `Address Book`, `#003`, `Send a fax`, **7001** (on the dial pad), and **Mono Start** or **Colour Start**.

This would dial ‘555–7001’. You can also add a pause by pressing **Redial/Pause**.

Additional ways to store numbers

Setting up Groups for Broadcasting

If you often want to send the same fax message to many fax numbers you can set up a Group.

Groups are stored on a One Touch key or a Speed Dial number. Each Group uses up a One Touch key or a Speed Dial location. You can then send the fax message to all the numbers stored in a Group just by pressing a One Touch key or entering a Speed Dial number, and then pressing **Mono Start**.

Before you can add numbers to a Group, you need to store them as One Touch or Speed Dial numbers. You can have up to 20 small Groups, or you can assign up to 339 numbers to one large Group.

1. Press `Address Book`.
2. Press `More`.
3. Press `Setup Groups`.
4. Press `Set Speed Dial` or `Set One Touch Dial` which you want to store the new Group to.

Note

The machine automatically allocates an available Speed Dial number or One Touch Dial location to the new Group.

5. Enter the Group name (up to 15 characters) by pressing the buttons on the Touchscreen. Use the chart on *Entering text* in *Appendix C* of the *Basic User's Guide* to help you enter letters. Press `OK`.

6 Enter the Group number by pressing the buttons on the Touchscreen.
Press OK.

7 To select the telecommunication medium and the file type, press ◀ or ▶ to display
Fax/IFAX,
E-Mail B&W PDF,
E-Mail B&W TIFF,
E-Mail Color PDF,
E-Mail Color JPEG,
E-Mail Color XPS,
E-Mail Gray PDF,
E-Mail Gray JPEG or
E-Mail Gray XPS.
Press the option you want.

8 Add One Touch or Speed Dial numbers to the Group by pressing the check box to display a red check mark.
If you want to list the numbers in alphabetical order, press #001 A.
Press OK.

Note

- One Touch Dial numbers begin with ✳. Speed Dial numbers begin with #.
- If the stored telecommunication medium of a One Touch Dial number or a Speed Dial number is not compatible with the telecommunication medium selected in step ❼, the One Touch Dial number or Speed Dial number will be dimmed on the LCD.
- You can easily print a list of all your Speed-Dial numbers. Numbers that are part of a group will be marked in the Group column. (See *Reports* on page 45.)

9 To choose the fax/scan resolution for the Group number, go to the appropriate next step as shown in the following table.

Option selected in step ❼	Go to step
Fax/IFAX	❿
E-Mail Color PDF	⓫
E-Mail Color JPEG	
E-Mail Color XPS	
E-Mail Gray PDF	⓬
E-Mail Gray JPEG	
E-Mail Gray XPS	
E-Mail B&W PDF	⓭
E-Mail B&W TIFF	

10 Select the resolution from Standard, Fine, S.Fine [1] or Photo and go to step ⓯.

[1] S.Fine is available if the Group is constituted by only fax numbers.

11 Select the resolution from 100 dpi, 200 dpi, 300 dpi or 600 dpi.

- If you chose E-Mail Color PDF, go to step ⓮.
- If you chose E-Mail Color JPEG or E-Mail Color XPS, go to step ⓯.

12 Select the resolution from 100 dpi, 200 dpi or 300 dpi.

- If you chose E-Mail Gray PDF, go to step ⓮.
- If you chose E-Mail Gray JPEG or E-Mail Gray XPS, go to step ⓯.

13 Select the resolution from 200 dpi or 200 x 100 dpi.

- If you chose E-Mail B&W PDF, go to step ⓮.
- If you chose E-Mail B&W TIFF, go to step ⓯.

14 Select the PDF type from `PDF`, `PDF/A`, `Secure PDF` or `Signed PDF` that will be used to send E-mail.

Note

If you choose `Secure PDF`, the machine will ask you to enter a four-digit password using the numbers 0-9 before it starts scanning.

15 Press `OK` to confirm.

16 Press **Stop/Exit**.

Options for Setting Up Groups

The following chart shows the selections for setting up Group numbers.
When you store numbers, the LCD instructs you to choose from the options shown in the following steps.

Step 1 Enter Group Location	Step 2 Enter Group Name	Step 3 Enter Name	Step 4 Select Registration Type	Step 5 Add Stored One Touch and Speed Dial Numbers to the Group	Step 6 Select Resolution	Step 7 Select File Type
One Touch or Speed Dial	(Name) Press OK	(1 to 40)	Fax/IFAX	Fax Number or E-mail Address	Standard, Fine, S.Fine [1], Photo	-
			E-Mail Color PDF	E-mail Address	100 dpi, 200 dpi, 300 dpi, 600 dpi	PDF, PDF/A, Secure PDF, Signed PDF
			E-Mail Color JPEG		100 dpi, 200 dpi, 300 dpi, 600 dpi	-
			E-Mail Color XPS		100 dpi, 200 dpi, 300 dpi, 600 dpi	-
			E-Mail Gray PDF		100 dpi, 200 dpi, 300 dpi	PDF, PDF/A, Secure PDF, Signed PDF
			E-Mail Gray JPEG		100 dpi, 200 dpi, 300 dpi	-
			E-Mail Gray XPS		100 dpi, 200 dpi, 300 dpi	-
			E-Mail B&W PDF		200 dpi, 200 x 100 dpi	PDF, PDF/A, Secure PDF, Signed PDF
			E-Mail B&W TIFF		200 dpi, 200 x 100 dpi	-

[1] S.Fine does not appear if you add an E-mail address in step 5.

Note

- If you choose Signed PDF, you must install a certificate to your machine using Web Based Management. Choose **Configure Signed PDF Settings** from **Administrator Settings** in Web Based Management. For how to install a certificate, see the *Network User's Guide*.
- PDF/A is a PDF file format intended for long-term archiving. This format contains all the necessary information to be able to reproduce the document after long-term storage.
- A Signed PDF helps prevent data tampering and the impersonation of an author by including a digital certificate within the document.

Changing Group numbers

You can change a Group number that has already been stored. If the Group has a fax forwarding number, it will be dimmed on the LCD. You cannot select the number to make changes.

Changing a Group name, Resolution or PDF type

1. Press `Address Book`.
2. Press `More`.
3. Press `Change`.
4. Press ▲ or ▼ to display the Group you want to change.
   Press the Group.
5. Do one of the following:
   - If you chose Name, enter the name (up to 15 characters) by pressing the buttons on the Touchscreen.

     Press `OK`.
   - If you chose Resolution, press one of the available resolution options displayed on the LCD.
   - If you chose PDF type, press one of the available file type options displayed on the LCD.

   The LCD will display your new setting.

Note

How to change the stored name or number:

If you want to change a character, press ◀ or ▶ to position the cursor under the character you want to change, and then press ⌫. Re-enter the character.

6. Press `OK`.
7. Press **Stop/Exit**.

Adding and deleting numbers in a Group

1. Press `Address Book`.
2. Press `More`.
3. Press `Change`.
4. Press ▲ or ▼ to display the Group you want to change.
   Press the Group.
5. Press `Add/Delete`.
6. Press ▲ or ▼ to display the number you want to add or delete.
7. Press the check box of the number you want to add to check it.
   Press the check box of the number you want to delete to uncheck it.
   Press `OK` to confirm.
8. Press `OK`.
9. Press **Stop/Exit**.

Deleting Group numbers

You can delete a Group number that has already been stored. If a Group has a scheduled job or fax forwarding number, it will be dimmed on the LCD. You cannot select the number to delete it.

1. Press `Address Book`.
2. Press `More`.
3. Press `Delete`.
4. Press ▲ or ▼ to display the Group you want to delete.
   Press the check box of the Group you want to delete to check it.
   Press `OK`.
5. Do one of the following:
   - To Delete the Group, press `Yes`.
   - To exit without deleting the Group, press `No`.
6. Press **Stop/Exit**.

6 Printing reports

Fax reports

Some fax reports (transmission verification and fax journal) can be printed automatically and manually.

Transmission verification report

You can use the Transmission Verification Report as proof that you sent a fax. (For details about how to set up the type of report you want, see *Transmission Verification Report* in *Chapter 4* of the *Basic User's Guide*.)

Fax Journal

You can set the machine to print a fax journal (activity report) at specific intervals (every 50 faxes, 6, 12 or 24 hours, 2 or 7 days). The default setting is `Every 50 Faxes`, this means that your machine will print the journal when the machine has stored 50 jobs.

If you set the interval to `Off`, you can still print the report by following the steps on the next page.

1. Press `MENU`.
2. Press ▲ or ▼ to display `Fax`.
   Press `Fax`.
3. Press ▲ or ▼ to display `Report Setting`.
   Press `Report Setting`.
4. Press `Journal Period`.
5. Press ◀ or ▶ to choose an interval
   - 6, 12, 24 hours, 2 or 7 days

     The machine will print the report at the chosen time and then erase all jobs from its memory.

     If the machine's memory becomes full with 200 jobs before the time you chose has passed, the machine will print the Journal early and then erase all jobs from the memory. If you want an extra report before it is due to print, you can print it without erasing the jobs from the memory.
   - Every 50 Faxes

     The machine will print the Journal when the machine has stored 50 jobs.
6. Do one of the following:
   - If you chose Every 50 Faxes

     Go to step ❼.
   - If you chose Every 6, 12, 24 hours or 2 Days

     Enter the time to start printing in 24-hour format. (For example: enter 19:45 for 7:45 PM.)

     Press `OK`.
   - If you chose Every 7 Days

     Enter the time to start printing in 24-hour format. (For example: enter 19:45 for 7:45 PM.)

     Press `OK`.

     Press ◀ or ▶ to choose the day of the week.
7. Press **Stop/Exit**.

Reports

The following reports are available:

1 `XMIT Verify`

Displays the Transmission Verification Report for your last outgoing 200 faxes and prints the last report.

2 `Help List`

Prints a list of commonly used functions to help you program your machine.

3 `Tel Index List`

Prints a list of names and numbers stored in the One Touch and Speed Dial memory in numerical or alphabetical order.

4 `Fax Journal`

Prints a list of information about your last 200 incoming and outgoing faxes. (TX: transmit.) (RX: receive.)

5 `User Settings`

Print a list of your current settings.

6 `Network Config`

Lists your network settings.

7 `Drum Dot Print`

Prints the drum dot check sheet to troubleshoot a dotted print problem.

8 `WLAN Report`

Prints the result of wireless LAN connectivity diagnosis.

9 `Order Form`

You can print an accessories order form to fill out and send to your Brother dealer.

How to print a report

1. Press `MENU`.
2. Press ▲ or ▼ to display `Print Reports`.
   Press `Print Reports`.
3. Press ▲ or ▼ to display the report you want to print.
   Press the report you want to print.
4. Do one of the followings:
   - If you chose `XMIT Verify`, press `Print Report`.
   - If you chose `Tel Index List`, press `Numerical Order` or `Alphabetical Order`.
   - If you chose other than `XMIT Verify` or `Tel Index List`, go to ❺.
5. Press **Mono Start** or **Colour Start**.
6. Press **Stop/Exit**.

7 Making copies

Copy settings

You can change the copy settings temporarily for the next copy.

These settings are temporary, and the machine returns to its default settings one minute after copying, unless you have set the Mode Timer to 30 seconds or less. (See *Mode Timer* on page 4.)

To change a setting, press (**COPY**) and then press ◀ or ▶ to scroll through the copy settings. When the setting you want is displayed, press the button.

When you are finished choosing settings, press **Mono Start** or **Colour Start**.

Stop copying

To stop copying, press **Stop/Exit**.

Improving copy quality

You can choose from a range of quality settings. The default setting is `Auto`.

- `Auto`

  Auto is the recommended mode for ordinary printouts. Suitable for documents that contain both text and photographs.

- `Text`

  Suitable for documents containing mainly text.

- `Photo`

  Better copy quality for photographs.

- `Graph`

  Suitable for copying receipts.

1. Press (**COPY**).
2. Load your document.
3. Enter the number of copies you want.
4. Press ◀ or ▶ to display `Quality`. Press `Quality`.
5. Press `Auto`, `Text`, `Photo` or `Graph`.
6. If you do not want to change additional settings, press **Mono Start** or **Colour Start**.

Enlarging or reducing the image copied

To enlarge or reduce the next copy follow the instructions below:

1. Press (**COPY**).
2. Load your document.
3. Enter the number of copies you want.
4. Press ◀ or ▶ to display `Enlarge/Reduce`.
   Press `Enlarge/Reduce`.
5. Press `100%`, `Enlarge`, `Reduce` or `Custom(25-400%)`.
6. Do one of the following:
   - If you chose `Enlarge` or `Reduce`, press the enlargement or reduction ratio button you want.
   - If you chose `Custom(25-400%)`, enter an enlargement or reduction ratio from 25% to 400%.

     Press `OK`.
   - If you chose `100%`, go to step ❼.

100%*
104% EXE → LTR
141% A5 → A4
200%
50%
70% A4 → A5
78% LGL → LTR
83% LGL → A4
85% LTR → EXE
91% Full Page
94% A4 → LTR
97% LTR → A4
Custom(25-400%)

7. If you do not want to change additional settings, press **Mono Start** or **Colour Start**.

Note

- Page Layout Options 2 in 1 (P), 2 in 1 (L), 2 in 1 (ID), 4 in 1 (P) and 4 in 1 (L) are *not* available with Enlarge/Reduce.
- (P) means Portrait and (L) means Landscape.

Duplex (2-sided) Copying

If you want to use the automatic duplex copy feature, load your document in the ADF.

If you get an Out of Memory message while you are making duplex copies, try installing extra memory. (See *Installing extra memory* on page 68.)

You must choose a 2-sided copy layout from the following options before you can start duplex copying. The layout of your document determines which 2-sided copy layout you should choose.

■ **2side→2side**

Portrait

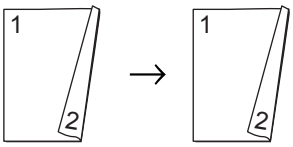

Landscape

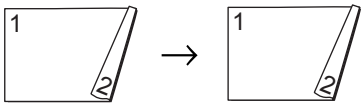

■ **1side→2side Long Edge Flip**

Portrait

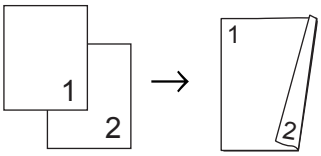

Landscape

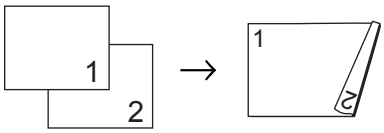

■ **2side→1side Long Edge Flip**

Portrait

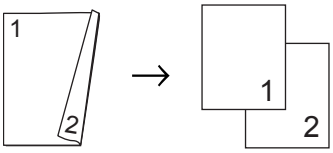

Landscape

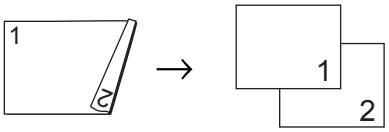

■ **1side→2side Short Edge Flip**

Portrait

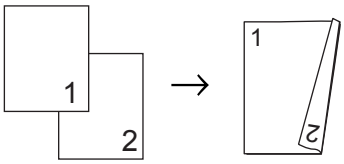

Landscape

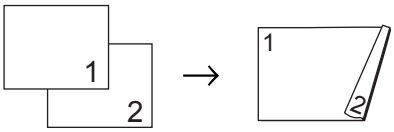

■ **2side→1side Short Edge Flip**

Portrait

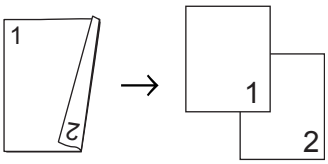

Landscape

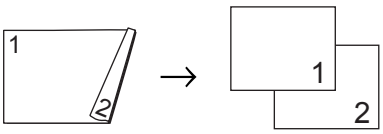

1. Press (**COPY**).
2. Load your document.
3. Enter the number of copies you want.

4 Press ◀ or ▶ to display `Duplex Copy`. Press `Duplex Copy`.

5 Press ◀ or ▶ to display the following layout options:
`2side→2side`,
`1side→2side LongEdgeFlip`,
`2side→1side LongEdgeFlip`,
`1side→2side ShortEdgeFlip`,
`2side→1side ShortEdgeFlip`,
`Off`

Press the option you want.

6 If you do not want to change additional settings, press **Mono Start** or **Colour Start**.

Tray selection

You can temporarily change the Tray Use option for the next copy.

1 Press (**COPY**).

2 Load your document.

3 Enter the number of copies you want.

4 Press ◀ or ▶ to display `Tray Use`. Press `Tray Use`.

5 Press `MP>T1`, `MP>T1>T2` [1], `T1>MP`, `T1>T2>MP` [1], `Tray#1 Only`, `Tray#2 Only` [1] or `MP Only`.

[1] `T2` and `Tray#2 Only` appears only if the optional lower tray is installed.

6 If you do not want to change additional settings, press **Mono Start** or **Colour Start**.

Note

To change the default setting for Tray Use, see *Tray Use in copy mode* in *Chapter 2* of the *Basic User's Guide*.

Adjusting Brightness and Contrast

Brightness

Adjust the copy brightness to make copies darker or lighter.

1 Press (**COPY**).

2 Load your document.

3 Enter the number of copies you want.

4 Press ◀ or ▶ to display `Brightness`. Press `Brightness`.

5 Press ◀ to make a darker copy or press ▶ to make a lighter copy. Press `OK`.

6 If you do not want to change additional settings, press **Mono Start** or **Colour Start**.

Contrast

Adjust the contrast to help an image look sharper and more vivid.

1 Press (**COPY**).

2 Load your document.

3 Enter the number of copies you want.

4 Press ◀ or ▶ to display `Contrast`. Press `Contrast`.

5 Press ◀ to decrease the contrast or press ▶ to increase the contrast. Press `OK`.

6 If you do not want to change additional settings, press **Mono Start** or **Colour Start**.

Sorting copies using the ADF

You can sort multiple copies. Pages will be stacked in the order 1 2 3, 1 2 3, 1 2 3, and so on.

1. Press (**COPY**).
2. Load your document in the ADF.
3. Enter the number of copies you want.
4. Press ◀ or ▶ to display `Stack/Sort`. Press `Stack/Sort`.
5. Press `Sort`.
6. If you do not want to change additional settings, press **Mono Start** or **Colour Start**.

Note

Sort is available only when the document is in the ADF.

Making N in 1 copies (page layout)

You can reduce the amount of paper used when copying by using the N in 1 copy feature. This allows you to copy two or four pages onto one page. If you want to copy both sides of an ID card onto one page, see *2 in 1 ID Copy* on page 52.

IMPORTANT

- Please make sure the paper size is set to `Letter`, `A4`, `Legal` or `Folio`.
- You cannot use the Enlarge/Reduce setting with the N in 1 feature.
- (`P`) means Portrait and (`L`) means Landscape.

1. Press (**COPY**).
2. Load your document.
3. Enter the number of copies you want.
4. Press ◀ or ▶ to display `Page Layout`. Press `Page Layout`.
5. Press ◀ or ▶ to display `Off(1in1)`, `2in1(P)`, `2in1(L)`, `2in1(ID)` [1], `4in1(P)` or `4in1(L)`. Press the button you want.

   [1] For details about `2in1(ID)`, see *2 in 1 ID Copy* on page 52.

6. If you do not want to change additional settings, press **Mono Start** or **Colour Start** to scan the page. If you placed the document in the ADF, the machine scans the pages and starts printing.

   If you are using the scanner glass, go to step ❼.

7. After the machine scans the page, press `Yes` to scan the next page.

8 Put the next page on the scanner glass. Press **Mono Start** or **Colour Start**. Repeat steps ❼ and ❽ for each page of the layout.

9 After all the pages have been scanned, press No in step ❼ to finish.

If you are copying from the ADF:

Insert your document *face up* in the direction shown below:

■ **2 in 1 (P)**

■ **2 in 1 (L)**

■ **4 in 1 (P)**

■ **4 in 1 (L)**

If you are copying from the scanner glass:

Insert your document *face down* in the direction shown below:

■ **2 in 1 (P)**

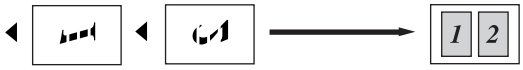

■ **2 in 1 (L)**

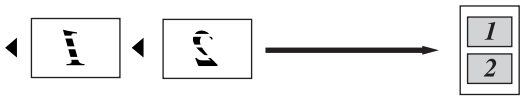

■ **4 in 1 (P)**

■ **4 in 1 (L)**

7

2 in 1 ID Copy

You can copy both sides of your identification card onto one page, keeping the original card size.

Note

You can copy an identification card to the extent permitted under applicable laws. See *Unlawful use of copying equipment* in the *Safety and Legal Booklet*.

1. Press (**COPY**).
2. Place your identification card *face down* on the left side of the scanner glass.

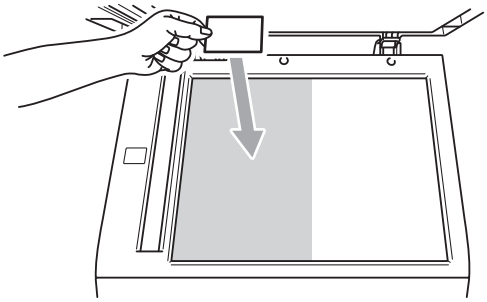

   - Even if a document is placed on the ADF, the machine scans the data from the scanner glass.
3. Enter the number of copies you want.
4. Press ◀ or ▶ to display `Page Layout`. Press `Page Layout`.
5. Press ◀ or ▶ to display `2in1(ID)`. Press `2in1(ID)`.
6. Press **Mono Start** or **Colour Start**. After the machine scans the first side of the card, the LCD will display `Turn over the ID Card Then Press Start`.
7. Turn over your identification card and place it on the left side of the scanner glass.
8. Press **Mono Start** or **Colour Start**. The machine scans the other side of the card and prints the page.

Note

When 2 in 1 ID Copy is chosen, the machine sets the quality to `Photo` and the contrast to `+2`.

Adjusting Colour (Saturation)

You can change the default setting for colour saturation.

1. Press (**COPY**).
2. Load your document.
3. Enter the number of copies you want.
4. Press ◀ or ▶ to display `Color Adjust`.
   Press `Color Adjust`.
5. Press `Red`, `Green` or `Blue`.
6. Press ◀ to decrease or ▶ to increase the colour saturation.
   Press `OK`.
7. Repeat steps ❺ and ❻ if you want to adjust the next colour. Press .
8. If you do not want to change additional settings, press **Mono Start** or **Colour Start**.

Setting your changes as the new default

You can save the copy settings for `Quality`, `Brightness`, `Contrast` and `Color Adjust` you use most often by setting them as the default. These settings will stay until you change them again.

1. Press (**COPY**).
2. Press ◀ or ▶ to choose the setting you want to change, and then press the new option.
   Repeat this step for each setting you want to change.
3. After changing the last setting, press ◀ or ▶ to display `Set New Default`.
   Press `Set New Default`.
4. Press `Yes`.
5. Press **Stop/Exit**.

Restoring all copy settings to the factory settings

You can restore all the copy settings you have changed to the factory settings. These settings will stay until you change them again.

1. Press (**COPY**).
2. After changing the last setting, press ◀ or ▶ to display `Factory Reset`.
   Press `Factory Reset`.
3. Press `Yes`.
4. Press **Stop/Exit**.

Setting your favourites

You can store the copy settings that you use most often by setting them as a favourite. You can set up to three favourites.

1. Press (**COPY**).
2. Choose the copy option and settings you want to store.
3. Press ◀ or ▶ to display `Favorite Settings`.
   Press `Favorite Settings`.
4. Press `Store`.
5. Press the location where you want to store your setting for `Favorite:1`, `Favorite:2` or `Favorite:3`.
6. Do one of the following:
   - If you want to rename your setting, press ⌫ to delete characters. Then enter the new name (up to 12 characters). Press `OK`.
   - If you do not want to rename your setting, press `OK`.
7. Press **Stop/Exit**.

Retrieving your favourite setting

When you are ready to use one of your favourite set of settings, you can recall it.

1. Press (**COPY**).
2. Press `Favorite`.
3. Press the favourite setting you want to retrieve.
4. Press **Mono Start** or **Colour Start**.

Rename your favourite setting

After you stored your favourite setting, you can rename it.

1. Press (**COPY**).
2. Press ◀ or ▶ to display `Favorite Settings`.
   Press `Favorite Settings`.
3. Press `Rename`.
4. Press the favourite setting you want to rename.
5. Enter the new name (up to 12 characters).
6. Press `OK`.
7. Press **Stop/Exit**.

A Routine maintenance

Cleaning and checking the machine

Clean the outside and inside of the machine regularly with a dry, lint-free cloth. When you replace the toner cartridge or the drum unit, make sure that you clean the inside of the machine. If printed pages are stained with toner, clean the inside of the machine with a dry, lint-free cloth.

WARNING

DO NOT use cleaning materials that contain ammonia, alcohol, any type of spray, or any type of flammable substance to clean the outside or inside of the machine. Doing this may cause a fire or electrical shock.

See *To use the product safely* in the *Safety and Legal Booklet* for how to clean the machine.

Be careful not to inhale toner.

IMPORTANT

Use neutral detergents. Cleaning with volatile liquids such as thinner or benzine will damage the surface of the machine.

Checking the Page Counters

You can see the machine's Page Counters for copies, printed pages, reports and lists, faxes or a summary total.

1. Press `MENU`.
2. Press ▲ or ▼ to display `Machine Info.`.
   Press `Machine Info.`.
3. Press `Page Counter`.
   The LCD shows number of pages for `Total`, `Fax/List`, `Copy` or `Print`.
4. Press `Total`, `Fax/List`, `Copy` or `Print` to see the page counters for Colour and Black & White.
5. Do one of the following:
   - To see the other options, press ⮌.
   - To exit, press **Stop/Exit**.

A

Checking the remaining life of parts

You can see the machine's parts life on the LCD.

1. Press `MENU`.
2. Press ▲ or ▼ to display `Machine Info..`
   Press `Machine Info..`
3. Press `Parts Life`.
4. Press ▲ or ▼ to see the approximate remaining parts life of the `Drum`, `Belt Unit`, `Fuser`, `Laser`, `PF Kit MP`, `PF Kit 1` and `PF Kit 2`.
5. Press **Stop/Exit**.

Replacing periodic maintenance parts

The periodic maintenance parts will need to be replaced regularly to maintain the print quality. The parts listed below will have to be replaced after printing approximately 50,000 pages [1] for PF Kit MP and 100,000 pages [1] for PF Kit 1, PF Kit 2, Fuser and Laser. Please call your Brother dealer when the following messages appear on the LCD.

[1] A4 or Letter size single-sided pages.

LCD message	Description
`Replace Parts Fuser Unit`	Replace the fuser unit.
`Replace Parts Laser Unit`	Replace the laser unit.
`Replace Parts PF Kit 1`	Replace the paper feeding kit for the paper tray.
`Replace Parts PF Kit 2`	Replace the paper feeding kit for the lower tray (option).
`Replace Parts PF Kit MP`	Replace the paper feeding kit for the multi-purpose tray.

Packing and shipping the machine

WARNING

This machine is heavy and weighs approximately 28.5 kg. To prevent possible injuries at least two people should lift the machine. Be careful not to pinch your fingers when you put the machine down.

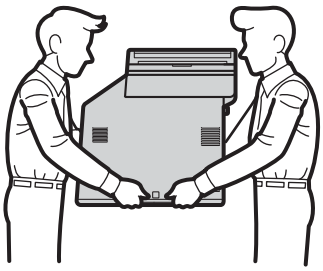

If you use a Lower Tray, carry it separately from your machine.

IMPORTANT

When shipping the machine, the waste toner box must be removed from the machine and put in a plastic bag, and then sealed. Failure to remove it and put it in a plastic bag before shipping may cause severe damage to the machine and may void the warranty.

Note

If for any reason you must ship your machine, carefully repack the machine in the original packaging to avoid any damage during transit. The machine should be adequately insured with the carrier.

Make sure that you have the following parts for repacking:

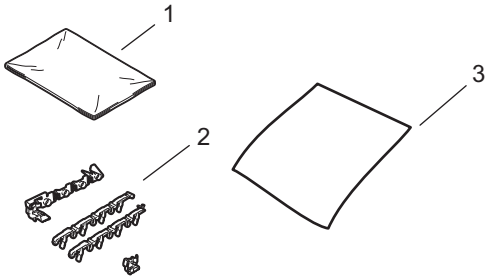

1 **Plastic bag for the waste toner box**

2 **Orange packing materials for locking the internal parts (4 pieces)**

3 **A piece of paper (A4 or Letter) to protect the belt unit (Please supply this yourself)**

A

1. Turn off the machine. Unplug the telephone line cord first, disconnect all cables, and then unplug the power cord from the electrical socket.

2. Press the front cover release button and then open the front cover.

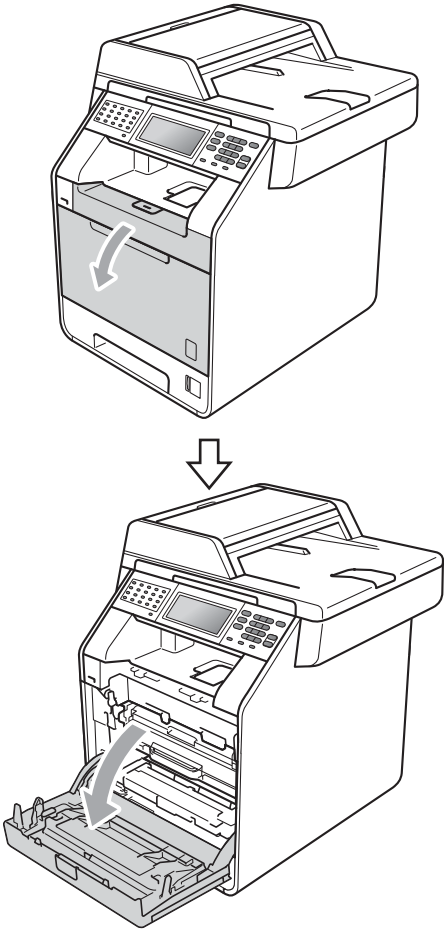

3. Hold the green handle of the drum unit. Pull the drum unit out until it stops.

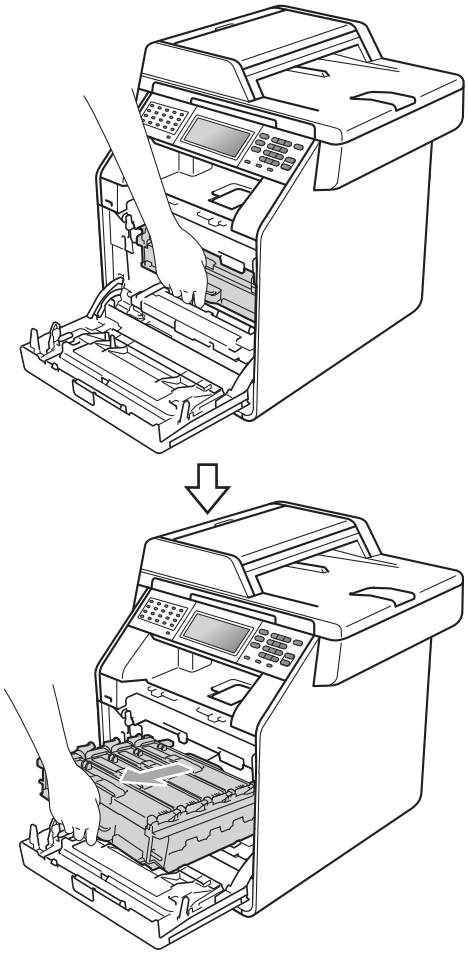

4 Turn the green lock lever (1) at the left of the machine anticlockwise to the release position. Holding the green handles of the drum unit, lift the front of the drum unit and remove it from the machine.

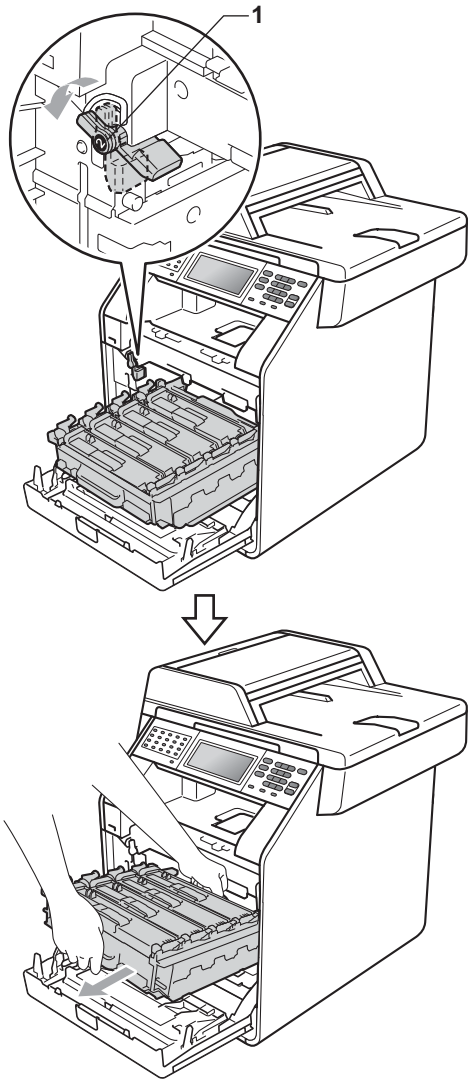

IMPORTANT

- Hold the green handles of the drum unit when you carry it. DO NOT hold the sides of the drum unit.
- We recommend that you place the drum unit on a clean, flat surface with a piece of disposable paper underneath it in case you accidentally spill or scatter toner.
- Handle the toner cartridge and the waste toner box carefully. If toner scatters on your hands or clothes, immediately wipe or wash it off with cold water.
- To prevent damage to the machine from static electricity, DO NOT touch the electrodes shown in the illustration.

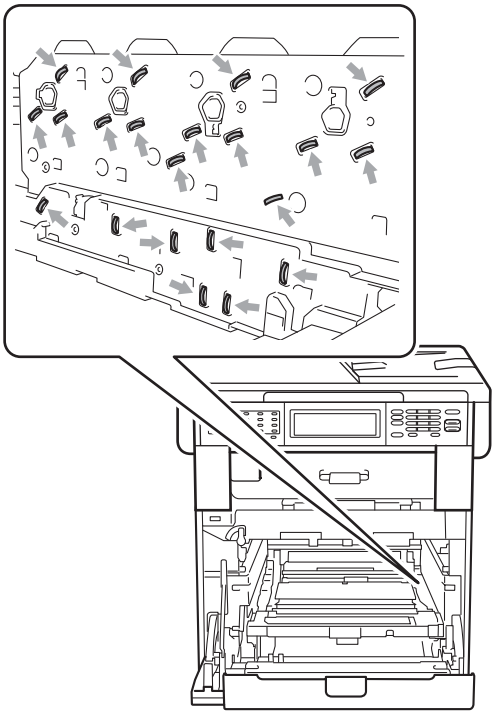

A

5 Hold the green handle of the belt unit with both hands and lift the belt unit up, then pull it out.

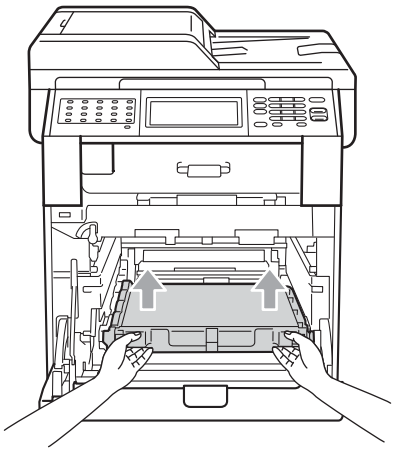

6 Remove the two pieces of orange packing material and discard them.

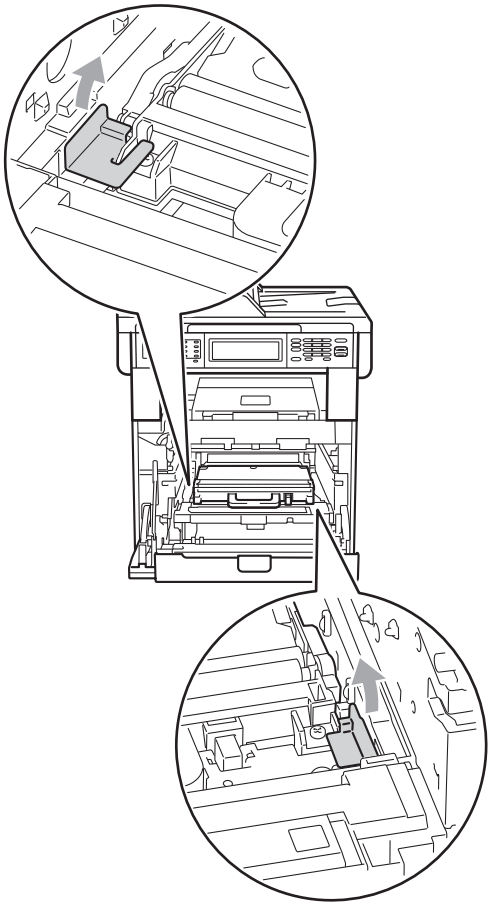

Note

This step is only necessary when you are replacing the waste toner box for the first time, and is not required for the replacement waste toner box. The orange packing pieces are installed at the factory to protect your machine during shipment from the factory.

7 Remove the waste toner box from the machine using the green handle, and then put it in a plastic bag and seal the bag completely.

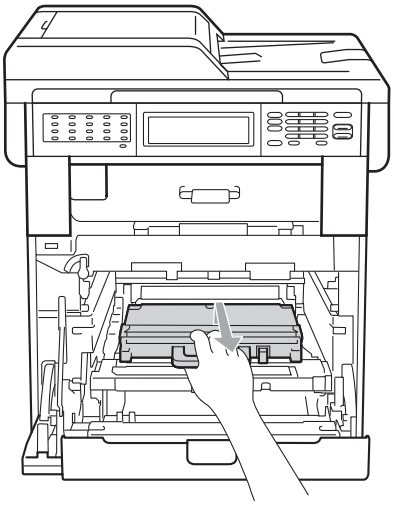

IMPORTANT

Handle the waste toner box carefully. If toner scatters on your hands or clothes, immediately wipe or wash it off with cold water.

8 Put the belt unit back into the machine. Make sure the belt unit is level and fits firmly into place.

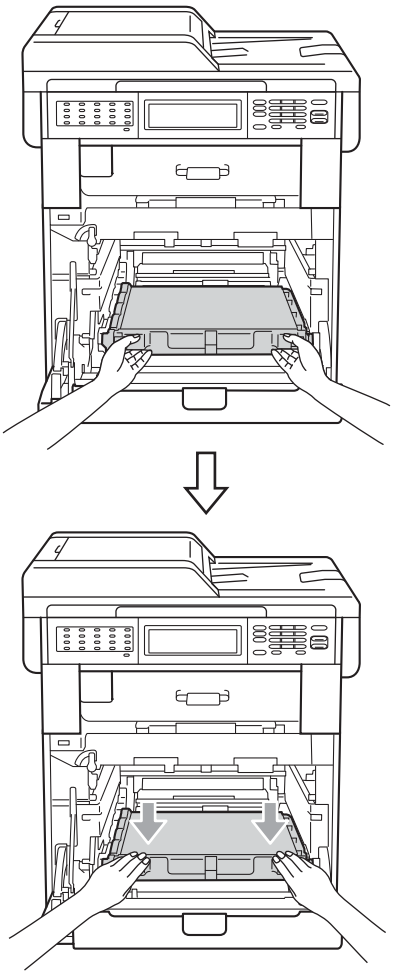

A

9 Install orange packing materials to the drum unit as follows:

- To secure the toner cartridges, install the matching orange packing strips (1) (marked L and R) to the drum unit on the left and right sides, as shown in the illustration.
- Attach the orange packing strip (2) to the left side of the drum unit, as shown in the illustration.
- Slide the small orange packing material (3) onto the metal shaft on the right side of the drum unit, as shown in the illustration.

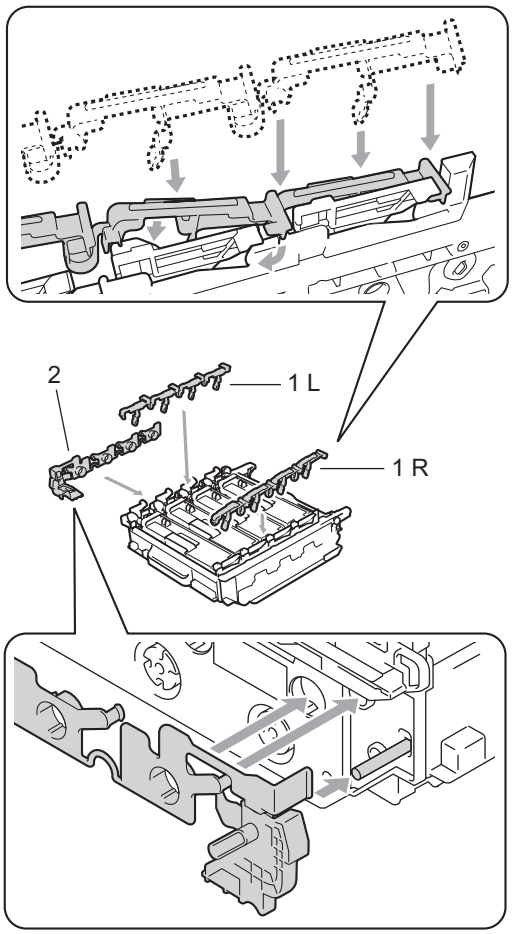

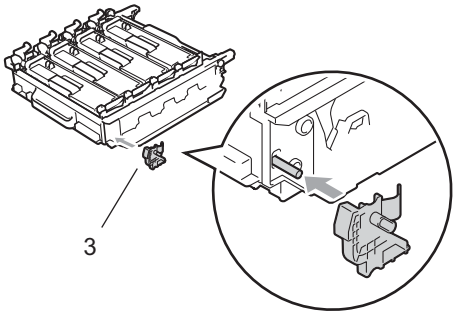

10 Put a piece of paper (A4 or Letter) on the belt unit to prevent damage to the belt unit.

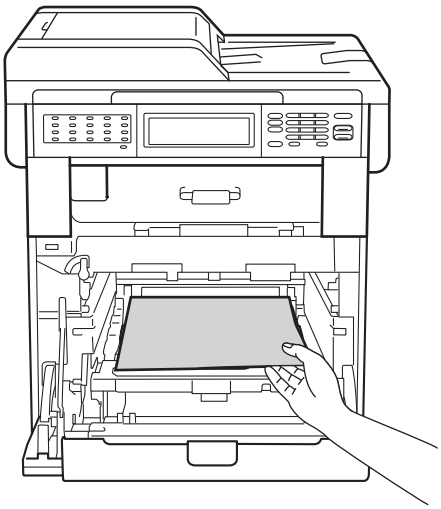

11 Make sure the green lock lever (1) is in the release position as shown in the illustration.

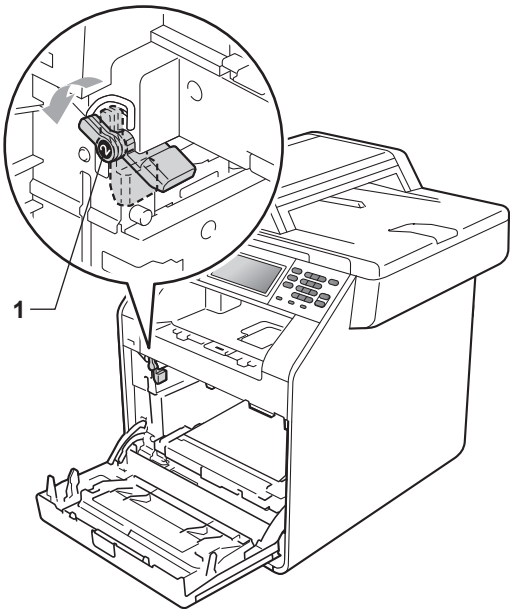

12 Match the guide ends (2) of the drum unit to the ▶ marks (1) on both sides of the machine, then gently slide the drum unit into the machine until it stops at the green lock lever.

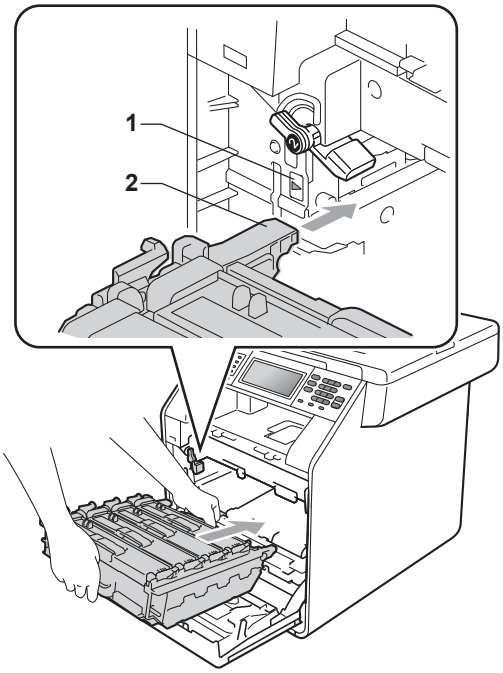

13 Turn the green lock lever (1) clockwise to the lock position.

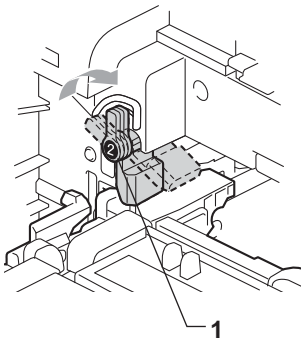

A

14 Push the drum unit in until it stops.

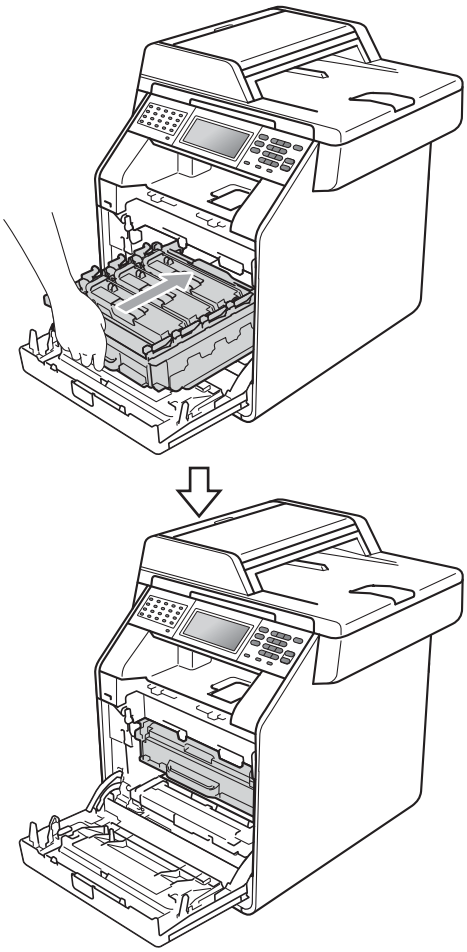

15 Close the front cover of the machine.

16 Put the Styrofoam piece (2) into the lower carton (1). Then put the waste toner box in the Styrofoam piece.

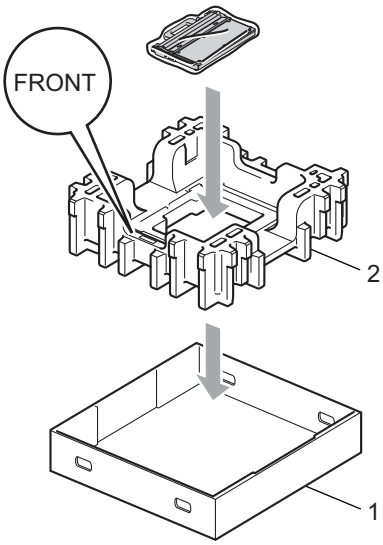

17 Wrap the machine with a plastic bag. Put the machine on the Styrofoam piece (1).

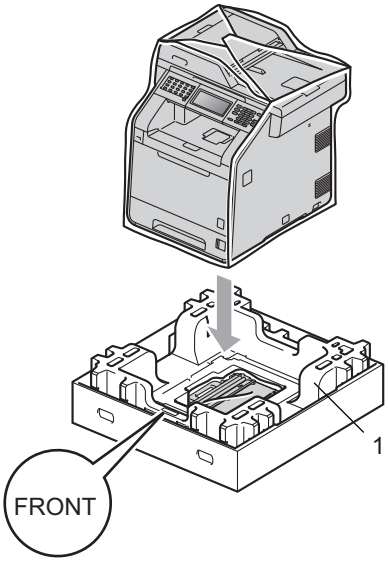

18 Put the Styrofoam piece (2) into the back side of Styrofoam piece (1) as shown in the illustration.

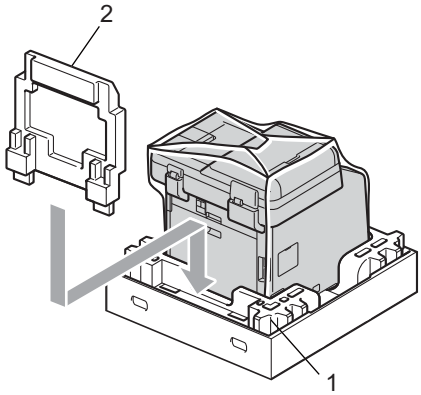

19 Place the upper carton (1) over the machine and the lower carton (2). Align the joint holes of the upper carton with the joint holes of the lower carton. Secure the upper carton to the lower carton using the four plastic joints (3) as shown in the illustration.

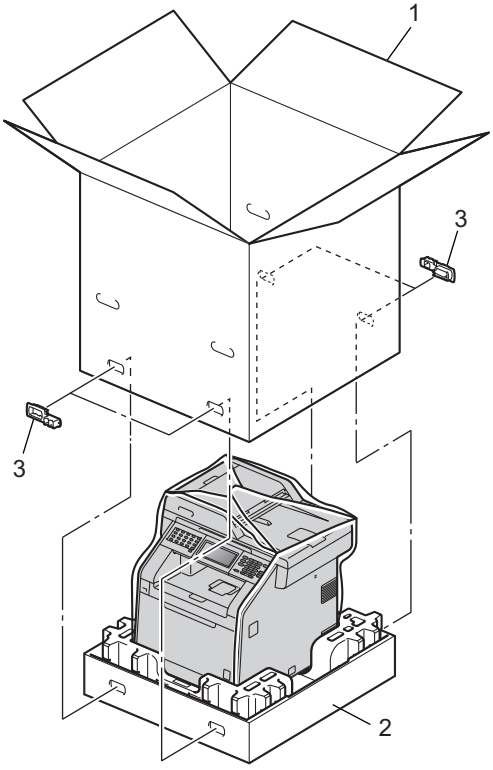

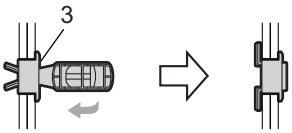

A

20 Put the two Styrofoam pieces (1) into the carton matching the right of the machine to the "RIGHT" mark on one of the Styrofoam pieces, and the left of the machine to the "LEFT" mark on the other Styrofoam piece. Put the AC power cord and printed materials in the original carton as shown in the illustration.

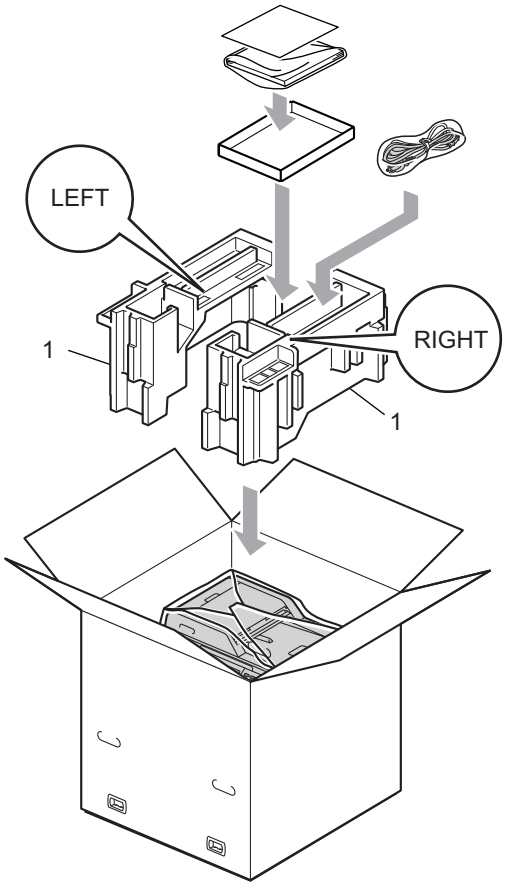

21 Close the carton and tape it shut.

B Options

Optional paper tray (LT-300CL)

An optional lower tray can be installed, and it can hold up to 500 sheets of 80 gsm paper.

When an optional tray is installed, the machine can hold up to 800 sheets of plain paper.

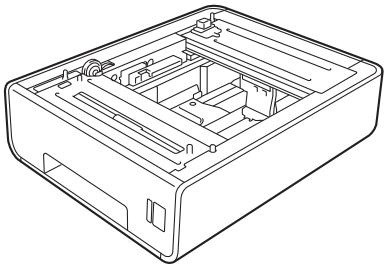

For setup, see the Instructions that we have supplied with the lower tray unit.

Memory board

MFC-9970CDW has 256 MB of standard memory. The machine has one slot for optional memory expansion. You can increase the memory up to maximum of 512 MB by installing one SO-DIMM (Small Outline Dual In-line Memory Module).

SO-DIMM Types

You can install the following SO-DIMMs:

- 128 MB Kingston KTH-LJ2015/128
- 256 MB Kingston KTH-LJ2015/256
- 128 MB Transcend TS128MHP422A
- 256 MB Transcend TS256MHP423A

Note

- For more information, visit the Kingston Technology website at http://www.kingston.com/.
- For more information, visit the Transcend website at http://www.transcend.com.tw/.

In general, the SO-DIMM must have the following specifications:

Type: 144-pin and 16-bit output

CAS latency: 4

Clock frequency: 267 MHz (533 Mb/S/Pin) or more

Capacity: 64, 128 or 256 MB

Height: 30.0 mm (1.18 in.)

DRAM type: DDR2 SDRAM

Note

- There might be some SO-DIMMs that will not work with the machine.
- For more information, call the dealer you bought the machine from or Brother Customer Service.

Installing extra memory

1. Turn off the machine's power switch. Unplug the telephone line cord.
2. Disconnect the interface cable from the machine, and then unplug the power cord from the electrical socket.

Note

Be sure to turn off the machine's power switch before you install or remove the SO-DIMM.

3. Remove the plastic (1) and then metal (2) SO-DIMM covers.

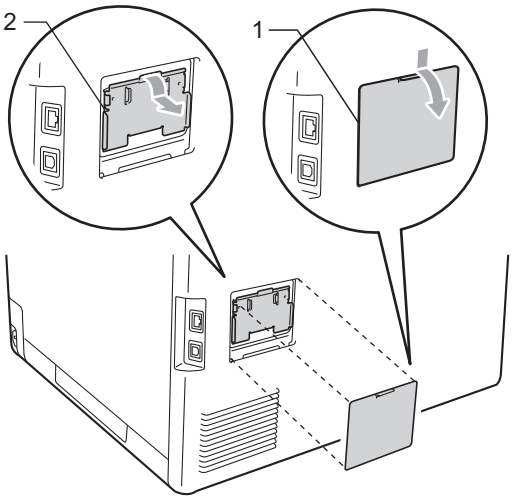

4. Unpack the SO-DIMM and hold it by its edges.

IMPORTANT

To prevent damage to the machine from static electricity, DO NOT touch the memory chips or the board surface.

5. Hold the SO-DIMM by the edges and align the notches in the SO-DIMM with the protrusions in the slot. Insert the SO-DIMM diagonally (1), then tilt it toward the interface board until it clicks into place (2).

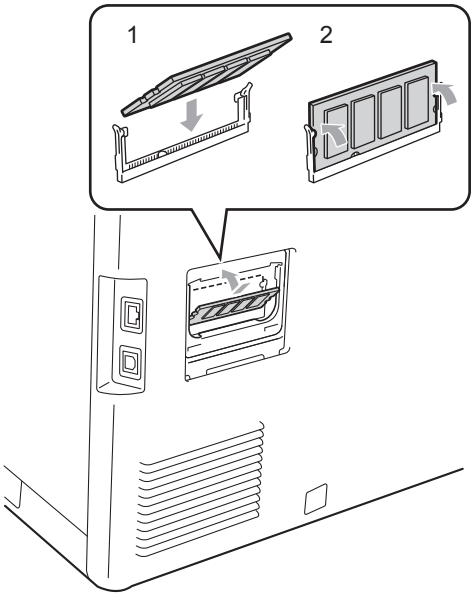

6 Put the metal (2) and then the plastic (1) SO-DIMM covers back on.

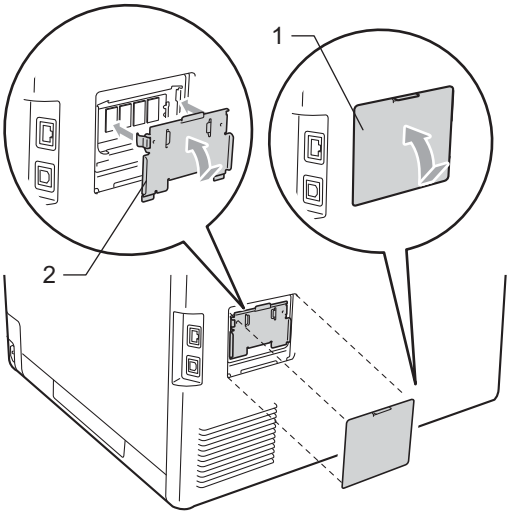

7 Plug the machine's power cord back into the electrical socket first, and then connect the interface cable.

8 Plug in the telephone line cord. Turn on the machine's power switch.

Note

To make sure that you have installed the SO-DIMM properly, you can print the user settings page that shows the current memory size. (See *How to print a report* on page 45.)

C Glossary

This is a comprehensive list of features and terms that appear in Brother manuals. Availability of these features depends on the model you purchased.

ADF (automatic document feeder)

The document can be placed in the ADF and scanned one page at a time automatically.

Auto Reduction

Reduces the size of incoming faxes.

Automatic fax transmission

Sending a fax without picking up the handset of the external telephone or pressing **Hook**.

Automatic Redial

A feature that enables your machine to redial the last fax number after five minutes if the fax did not go through because the line was busy.

Backup Print

Your machine prints a copy of every fax that is received and stored in memory. This is a safety feature so you will not lose messages during a power failure.

Batch Transmission

As a cost saving feature, all delayed faxes to the same fax number will be sent as one transmission.

Beeper Volume

Volume setting for the beep when you press a key or make an error.

Broadcasting

The ability to send the same fax message to more than one location.

Cancel Job

Cancels a programmed print job and clears the machine's memory.

CNG tones

The special tones (beeps) sent by fax machines during automatic transmission to tell the receiving machine that a fax machine is calling.

Coding method

Method of coding the information contained in the document. All fax machines must use a minimum standard of Modified Huffman (MH). Your machine is capable of greater compression methods, Modified Read (MR), Modified Modified Read (MMR) and JBIG, if the receiving machine has the same capability.

Communication error (or Comm. Error)

An error during fax sending or receiving, usually caused by line noise or static.

Compatibility group

The ability of one fax unit to communicate with another. Compatibility is assured between ITU-T Groups.

Contrast

Setting to compensate for dark or light documents, by making faxes or copies of dark documents lighter and light documents darker.

Delayed Fax

Sends your fax at a specified later time that day.

Distinctive Ring

A subscriber service purchased from the telephone company that gives you another telephone number on an existing telephone line. The Brother machine uses the new number to simulate a dedicated fax line.

Dual Access

Your machine can scan outgoing faxes or scheduled jobs into memory at the same time it is sending a fax or receiving or printing an incoming fax.

ECM (Error Correction Mode)

Detects errors during fax transmission and resends the pages of the fax that had an error.

Extension telephone

A telephone on the fax number that is plugged into a separate wall socket.

External phone

A TAD (telephone answering device) or telephone that is connected to your machine.

F/T Ring Time

The length of time that the Brother machine fast double-rings (when the Receive Mode setting is Fax/Tel) to notify you to pick up a voice call that it answered.

Fax Ability

A subscriber service purchased from the telephone company that provides another telephone number on an existing telephone line. The Brother fax machine uses the new number to simulate a dedicated fax line.

Fax Detect

Enables your machine to respond to CNG tones if you interrupt a fax call by answering it.

Fax Forwarding

Sends a fax received into the memory to another pre-programmed fax number.

Fax Journal

Lists information about the last 200 incoming and outgoing faxes. TX means Transmit. RX means Receive.

Fax Storage

You can store faxes in the memory.

Fax tones

The signals sent by sending and receiving fax machines while communicating information.

Fax/Tel

You can receive faxes and telephone calls. Do not use this mode if you are using a telephone answering device (TAD).

Fine resolution

Resolution is 203 × 196 dpi. It is used for small print and graphs.

Greyscale

The shades of grey available for copying and faxing photographs.

Group number

A combination of One Touch and Speed Dial numbers that are stored on an One Touch key or in a Speed Dial location for Broadcasting.

Help List

A printout of the complete Menu table that you can use to program your machine when you do not have the User's Guides with you.

Journal Period

The pre-programmed time period between automatically printed Fax Journal Reports. You can print the Fax Journal on demand without interrupting the cycle.

LCD (liquid crystal display)

The display screen on the machine that shows interactive messages during On-Screen Programming and shows the date and time when the machine is idle.

Manual fax

When you lift the handset of your external telephone or press **Hook** so you can hear the receiving fax machine answer before you press **Mono Start** or **Colour Start** to begin transmission.

Menu mode

Programming mode for changing your machine's settings.

OCR (optical character recognition)

ScanSoft™ PaperPort™ 12SE with OCR or Presto! PageManager software application converts an image of text to text you can edit.

One Touch

Keys on the machine's control panel where you can store numbers for easy dialling. You can store a second number on each key if you press **21-40** and the One Touch key together.

Out of Paper Reception

Receives faxes into the machine's memory when the machine is out of paper.

Overseas Mode

Makes temporary changes to the fax tones to accommodate noise and static on overseas telephone lines.

Pause

Allows you to place a 3.5 second delay in the dialling sequence while you are dialling using the dial pad or while you are storing One Touch and Speed Dial numbers. Press **Redial/Pause** as many times as needed for longer pauses.

Polling

The process of a fax machine calling another fax machine to retrieve waiting fax messages.

Pulse

A form of rotary dialling on a telephone line.

Real Time Transmission

When memory is full, you can send faxes in real time.

Remaining Jobs

You can check which programmed fax jobs are waiting in the memory and cancel the jobs individually.

Remote Access Code

Your own four-digit code (– – –✱) that allows you to call and access your machine from a remote location.

Remote Activation code

Press this code (✱ 5 1) when you answer a fax call on an extension or external telephone.

Remote Retrieval Access

The ability to access your machine remotely from a touch tone telephone.

Resolution

The number of vertical and horizontal lines per inch.

Ring Delay

The number of rings before the machine answers in `Fax Only` and `Fax/Tel` modes.

Ring Volume

Volume setting for the machine's ring.

Scanning

The process of sending an electronic image of a paper document into your computer.

Search

An electronic, alphabetical listing of stored One Touch, Speed Dial, Group numbers and LDAP.

Speed Dial

A pre-programmed number for easy dialling. Press `Address Book`, then enter the three-digit Speed Dial location, press `Send a fax` or `Send a E-mail` and press **Mono Start** or **Colour Start** to begin the dialling process.

Station ID

The stored information that appears on the top of faxed pages. It includes the sender's name and fax number.

TAD (telephone answering device)

You can connect an external TAD to your machine.

Tel Index List

A listing of names and numbers stored in One Touch and Speed Dial memory, in numerical order.

Temporary settings

You can choose certain options for each fax transmission and copy without changing the default settings.

Tone (Not available in New Zealand)

A form of dialling on the telephone line used for Touch Tone telephones.

Transmission

The process of sending faxes over the telephone lines from your machine to the receiving fax machine.

User Settings List

A printed report that shows the current settings of the machine.

Xmit Report (Transmission Verification Report)

A listing for each transmission, that shows its date, time and number.

D Index

A

Apple Macintosh
  See Software User's Guide.

B

Broadcasting 19
  cancelling 20
  setting up groups for 38

C

Cancelling
  broadcast in process 20
  fax jobs in memory 22
  fax storage 27
  jobs awaiting redial 22
  remote fax options 29
ControlCenter2 (for Macintosh)
  See Software User's Guide.
ControlCenter4 (for Windows®)
  See Software User's Guide.
Copy
  2 in 1 ID Copy 52
  brightness 49
  contrast 49
  Enlarge/Reduce 47
  key 46
  N in 1 (page layout) 50
  quality 46
  sort (ADF only) 50
  temporary settings 46
  using ADF 50
  using scanner glass 50
Cover page 23
  custom comments 23
  for all faxes 24
  printed form 24

D

Deep Sleep mode 3
Delayed batch transmission 21
Dialling
  groups (broadcasting) 19
  restricting dialling 14
Drum unit
  checking (remaining life) 56
Dual access 18
Duplex copy 48

E

Enlarge/Reduce 47

F

Fax codes
  changing 30
  remote access code 30
Fax forwarding
  changing remotely 31, 32
  programming a number 26
Fax storage 27
  printing from memory 35
  turning off 29
  turning on 27
Fax, stand-alone
  receiving
    fax forwarding 26, 32
    fax receive stamp 34
    into memory (fax storage) 27
    polling receive 36
    reducing to fit on paper 33
    retrieving from a remote site 31, 32
    to your PC 28
  sending 16
    broadcasting 19
    cancelling from memory 22
    contrast 17
    delayed batch 21
    delayed fax 21
    from memory (dual access) 18
    manual 18
    overseas 21
    polled transmit 25
    real time transmission 20
    resolution 17

G

Groups for broadcasting 38

H

HELP 45
Help List 45

L

LCD (liquid crystal display)
backlight brightness 3
Help List 45

M

Machine information
checking remaining life of parts 56
page counts 55
Macintosh
See Software User's Guide.
Maintenance, routine 55
checking the remaining life of parts 56
Manual
transmission 18
Memory
adding DIMM (option) 67
installing 68
storage 1

N

N in 1 (page layout) 50
Network
faxing
See Software User's Guide.
printing
See Network User's Guide.
scanning
See Software User's Guide.

P

Page layout (N in 1) 50
PaperPort™ 12SE with OCR
See Software User's Guide and Help in the PaperPort™ 12SE application to access How-to-Guides.
PC-Fax
See Software User's Guide.
Polling
polled transmit 25
polling receive 36
Power failure 1
Presto! PageManager
See Software User's Guide. See also Help in the Presto! PageManager application.
Print
fax from memory 35
reports 45
Printing
See Software User's Guide.

Q

Quality
copying 46
Quick dial
broadcasting 19
using groups 19
group dial
setting up groups for broadcasting 38

R

Redial/Pause key 72
Reducing
copies 47
incoming faxes 33
Remote retrieval 30
access code 30
commands 32
getting your faxes 31
Remote setup
See Software User's Guide.
Reports 44, 45
Fax Journal 44, 45
journal period 44
Help List 45
how to print 45
Network Configuration 45
Tel Index List 45
Transmission Verification 44
User Settings 45
Resolution
fax (standard, fine, superfine, photo) ... 17
setting for next fax 17
Restricted users 8

D

S

Scanning
See Software User's Guide.
Security
restricting dialling 14
Secure function lock
administrator password 7
Public user mode 8
restricted users 8
Setting lock 12
Sleep mode 2
Sort 50

T

Temporary copy settings 46
Timer for mode keys 4
Toner Save 2

W

Windows®
See Software User's Guide.
Wireless Network
See Quick Setup Guide and Network User's Guide.

brother®

This machine is approved for use in the country of purchase only. Local Brother companies or their dealers will only support machines purchased in their own countries.