Online User's Guide

DCP-L5600DN
MFC-L5700DN
MFC-L5755DW
MFC-L5900DW
MFC-L6700DW
MFC-L6900DW

© 2019 Brother Industries, Ltd. All rights reserved.

Table of Contents

Before You Use Your Brother Machine 1
Applicable Models 2
Definitions of Notes 3
Trademarks 4
Important Note 5
Introduction to Your Brother Machine 6
Before Using Your Machine 7
Control Panel Overview 8
Touchscreen LCD Overview 10
How to Navigate the Touchscreen LCD 14
Settings Screen Overview 16
Setting the Home Screen 18
Access Brother Utilities (Windows) 19
Uninstall the Brother Software and Drivers (Windows) 21
Paper Handling 22
Load Paper 23
Load and Print Using the Paper Tray 24
Load and Print Using the Multi-purpose Tray (MP Tray) 31
Paper Settings 39
Change the Paper Size and Paper Type 40
Select the Tray to Be Used For Printing 41
Change the Check Paper Size Setting 42
Change the Tray Size for 2-sided Printing 43
Load Documents 44
Load Documents in the Automatic Document Feeder (ADF) 45
Load Documents on the Scanner Glass 47
Unscannable and Unprintable Areas 48
Using Special Paper 49
Print 50
Print from Your Computer (Windows) 51
Print a Document (Windows) 52
Print More Than One Page on a Single Sheet of Paper (N in 1) (Windows) 54
Print as a Poster (Windows) 55
Print on Both Sides of the Paper (Windows) 56
Print as a Booklet (Windows) 59
Secure Print (Windows) 61
Use a Macro from Your Computer (Windows) 62
Use a Preset Print Profile (Windows) 63
Change the Default Print Settings (Windows) 66
Print a Document Using the BR-Script3 Printer Driver (PostScript® 3™ Language Emulation) (Windows) 68
Monitor the Status of the Machine from Your Computer (Windows) 69
Print Settings (Windows) 70
Print from Your Computer (Mac) 74
Print a Document (Mac) 75

Print on Both Sides of the Paper (Mac) ... 76
Print More Than One Page on a Single Sheet of Paper (N in 1) (Mac) ... 78
Secure Print (Mac) ... 79
Print a Document Using the BR-Script3 Printer Driver (PostScript® 3™ language emulation) (Mac) ... 80
Monitor the Status of the Machine from Your Computer (Mac) ... 81
Print Options (Mac) ... 83
Print One Page Duplicates on Different Types of Paper ... 88
Cancel a Print Job ... 89
Test Print ... 90
Scan ... 91
Scan Using the Scan Button on Your Brother Machine ... 92
Scan Photos and Graphics ... 93
Save Scanned Data to a Folder as a PDF File ... 95
Save Scanned Data to a USB Flash Drive ... 97
Scan to an Editable Text File (OCR) ... 99
Scan to Email Attachment ... 101
Send Scanned Data to an Email Server ... 103
Scan to FTP ... 105
Scan to SSH FTP (SFTP) ... 110
Scan to Network (Windows) ... 118
Scan to SharePoint ... 123
Web Services for Scanning on Your Network (Windows Vista SP2 or greater, Windows 7 and Windows 8) ... 128
Change Scan Button Settings from ControlCenter4 (Windows) ... 133
Change Scan Button Settings from ControlCenter2 (Mac) ... 136
Configure Certificate for Signed PDF ... 140
Disable Scanning from Your Computer ... 141
Scan from Your Computer (Windows) ... 142
Scan Using ControlCenter4 Home Mode (Windows) ... 143
Scan Using ControlCenter4 Advanced Mode (Windows) ... 160
Scan Using Nuance™ PaperPort™ 14SE or Other Windows Applications ... 177
Scan Using Windows Photo Gallery or Windows Fax and Scan ... 182
Scan from Your Computer (Mac) ... 185
Scan Using ControlCenter2 (Mac) ... 186
Scan Using TWAIN-Compliant Applications (Mac) ... 199
Configure Scan Settings Using Web Based Management ... 202
Set the Scan File Name Using Web Based Management ... 203
Set the Scan Job Email Report Using Web Based Management ... 204
Copy ... 205
Copy a Document ... 206
Enlarge or Reduce Copied Images ... 208
Make N in 1 Copies Using the Page Layout Feature ... 209
Sort Copies ... 211
Copy an ID Card ... 212
Copy on Both Sides of the Paper (2-sided Copy) ... 213
Copy Options ... 215

Fax **217**
Send a Fax 218
Send a Fax 219
Send a 2-sided Fax from the ADF 221
Send a Fax Manually 222
Send a Fax at the End of a Conversation 223
Send the Same Fax to More than One Recipient (Broadcasting) 224
Send a Fax in Real Time 226
Send a Fax at a Specified Time (Delayed Fax) 227
Add a Cover Page to Your Fax 228
Cancel a Fax in Progress 231
Check and Cancel a Pending Fax 232
Fax Options 233
Receive a Fax 234
Receive Mode Settings 235
Memory Receive (Remote Fax) Options 245
Remote Fax Retrieval 252
Voice Operations and Fax Numbers 258
Voice Operations 259
Store Fax Numbers 262
Set up Groups for Broadcasting 266
Combine Address Book Numbers 270
Telephone Services and External Devices 271
Distinctive Ring 272
FaxAbility 276
External TAD (Telephone Answering Device) 279
External and Extension Telephones 282
Multi-line Connections (PABX) 288
Fax Reports 289
Print a Transmission Verification Report 290
Print a Fax Journal 291
PC-FAX 292
PC-FAX for Windows 293
PC-FAX for Mac 316
Print Data Directly from a USB Flash Drive **319**
Compatible USB Flash Drives 320
Print Data Directly from a USB Flash Drive or Digital Camera Supporting Mass Storage 321
Create a PRN File for Direct Printing (Windows) 323
Network **324**
Get Started 325
Supported Basic Network Features 326
Network Management Software and Utilities 327
Learn about Network Management Software and Utilities 328
Additional Methods of Configuring Your Brother Machine for a Wireless Network 329
Before Configuring Your Brother Machine for a Wireless Network 330
Configure Your Machine for a Wireless Network 331

Configure Your Machine for a Wireless Network Using the One Push Method of Wi-Fi Protected Setup™ (WPS) ... 332
Configure Your Machine for a Wireless Network Using the PIN Method of Wi-Fi Protected Setup™ (WPS) ... 333
Configure Your Machine for a Wireless Network in Ad-Hoc Mode (For IEEE 802.11b/g/n) ... 336
Configure Your Machine for a Wireless Network Using the Machine's Control Panel Setup Wizard 340
Configure Your Machine for a Wireless Network When the SSID Is Not Broadcast ... 342
Configure Your Machine for an Enterprise Wireless Network ... 344
Use Wi-Fi Direct® ... 346
Advanced Network Features ... 356
Print the Network Configuration Report ... 357
Configure Your Mail Server Settings Using Web Based Management ... 358
Configure the Brother Machine for Email or Internet Fax (I-Fax) ... 361
I-Fax Options ... 376
Use the Send Fax to Server Feature ... 381
Print the WLAN Report ... 385
Configure and Operate LDAP Search ... 388
Synchronize Time with the SNTP Server Using Web Based Management ... 391
Technical Information for Advanced Users ... 395
Gigabit Ethernet (Wired Network Only) ... 396
Reset the Network Settings to the Factory Settings ... 398
Security ... 399
Lock the Machine Settings ... 400
About Using Setting Lock ... 401
Network Security Features ... 405
Before Using Network Security Features ... 406
Secure Function Lock 3.0 ... 407
Use Active Directory Authentication ... 414
Use LDAP Authentication ... 419
Manage Your Network Machine Securely Using SSL/TLS ... 423
Manage Your Network Machine Securely Using IPsec ... 456
Send or Receive an Email Securely ... 474
Use IEEE 802.1x Authentication for a Wired or a Wireless Network ... 480
Store Print Log to Network ... 485
Mobile/Web Connect ... 491
Use Web Services from Your Brother Machine ... 492
Use Brother Web Services ... 493
Print with Google Cloud Print™ ... 495
Print with AirPrint ... 496
Print with Mopria™ ... 497
Print and Scan from a Mobile Device ... 498
Print and Scan Using Near-Field Communication (NFC) ... 499
ControlCenter ... 500
ControlCenter4 (Windows) ... 501
Change the Operation Mode in ControlCenter4 (Windows) ... 502
Scan Using ControlCenter4 Home Mode (Windows) ... 504
Scan Using ControlCenter4 Advanced Mode (Windows) ... 505

Set Up the Brother Machine Using ControlCenter4 (Windows) 506
Create a Custom Tab Using ControlCenter4 Advanced Mode (Windows) 508
ControlCenter2 (Mac) 510
Scan Using ControlCenter2 (Mac) 511
Set Up the Brother Machine Using ControlCenter2 (Mac) 512
Troubleshooting 514
Error and Maintenance Messages 515
Transfer Your Faxes or Fax Journal Report 521
Document Jams 525
Document is Jammed in the Top of the ADF Unit 526
Document is Jammed under the Document Cover 527
Remove Small Scraps of Paper Jammed in the ADF 528
Paper Jams 529
Paper is Jammed in the MP tray 530
Paper is Jammed in the Paper Tray 531
Paper is Jammed in the Back of the Machine 533
Paper is Jammed inside the Machine 535
Paper is Jammed in the 2-sided Tray 537
Printing Problems 540
Improve the Print Quality 542
Telephone and Fax Problems 546
Set Dial Tone Detection 549
Set Telephone Line Compatibility for Interference and VoIP Systems 550
Network Problems 551
Error Messages 552
Use the Network Connection Repair Tool (Windows) 554
Where Can I Find My Brother Machine's Network Settings? 555
I Cannot Complete the Wireless Network Setup Configuration 556
My Brother Machine Cannot Print, Scan, or PC-FAX Receive over the Network 558
I Want to Check that My Network Devices are Working Correctly 560
Other Problems 561
Check the Machine Information 563
Reset Your Brother Machine 564
Reset Functions Overview 565
Routine Maintenance 566
Replace Supplies 567
Replace the Toner Cartridge 569
Replace the Drum Unit 572
Clean the Machine 575
Clean the Scanner 577
Clean the Touchscreen LCD 578
Clean the Corona Wire 579
Clean the Drum Unit 581
Clean the Paper Pick-up Rollers 585
Check the Remaining Life of Parts 587
Pack and Ship Your Machine 588
Pack the Machine and the Toner Cartridge Together 589

Pack the Machine and the Toner Cartridge Separately 591
Replace Periodic Maintenance Parts 594
Machine Settings 595
Change Machine Settings from the Control Panel 596
In the Event of Power Failure (Memory Storage) 597
General Settings 598
Save Your Favourite Settings as a Shortcut 615
Print Reports 618
Settings and Features Tables 621
Change Machine Settings from Your Computer 653
Change Machine Settings Using Web Based Management 654
Change the Machine Settings Using Remote Setup 659
Appendix 671
Specifications 672
How to Enter Text on Your Brother Machine 680
Supplies 681
Accessories 683
Glossary 684

Before You Use Your Brother Machine

- Applicable Models
- Definitions of Notes
- Trademarks
- Important Note

Applicable Models

This User's Guide applies to the following models:
DCP-L5600DN/MFC-L5700DN/MFC-L5755DW/MFC-L5900DW/MFC-L6700DW/MFC-L6900DW

Related Information

- Before You Use Your Brother Machine

Definitions of Notes

We use the following symbols and conventions throughout this User's Guide:

WARNING	WARNING indicates a potentially hazardous situation which, if not avoided, could result in death or serious injuries.
CAUTION	CAUTION indicates a potentially hazardous situation which, if not avoided, may result in minor or moderate injuries.
IMPORTANT	IMPORTANT indicates a potentially hazardous situation which, if not avoided, may result in damage to property or loss of product functionality.
NOTE	NOTE specifies the operating environment, conditions for installation, or special conditions of use.
	Tips icons indicate helpful hints and supplementary information.
	Electrical Hazard icons alert you to possible electrical shock.
	Fire Hazard icons alert you to the possibility of a fire.
	Hot Surface icons warn you not to touch hot machine parts.
	Prohibition icons indicate actions you must not perform.
Bold	Bold style identifies buttons on the machine's control panel or computer screen.
Italics	Italicised style emphasises an important point or refers you to a related topic.
`Courier New`	Courier New font identifies messages shown on the machine's LCD.

Related Information

- Before You Use Your Brother Machine

Trademarks

BROTHER is either a trademark or a registered trademark of Brother Industries, Ltd.

Microsoft, Windows, Windows Vista, Windows Server, SharePoint, Internet Explorer, Outlook, PowerPoint, Active Directory, OneNote, Windows phone and OneDrive are either registered trademarks or trademarks of Microsoft Corporation in the United States and/or other countries.

Apple, Mac, Safari, iPad, iPhone, iPod touch and OS X are trademarks of Apple Inc., registered in the United States and other countries.

AirPrint is a trademark of Apple Inc.

Nuance and PaperPort are trademarks or registered trademarks of Nuance Communications, Inc. or its affiliates in the United States and/or other countries.

PostScript and PostScript 3 are either registered trademarks or trademarks of Adobe Systems Incorporated in the United States and/or other countries.

Wi-Fi CERTIFIED, Wi-Fi, Wi-Fi Alliance, Wi-Fi Direct and Wi-Fi Protected Access are registered trademarks of Wi-Fi Alliance®.

WPA, WPA2, Wi-Fi Protected Setup and Wi-Fi Protected Setup logo are trademarks of Wi-Fi Alliance®.

Flickr is a registered trademark of Yahoo! Inc.

Android, Google Cloud Print, Google Drive, Google Play, Picasa Web Albums and Google Chrome are trademarks of Google Inc. Use of these trademarks is subject to Google Permissions.

Mopria is a trademark of Mopria Alliance, Inc.

UNIX is a registered trademark of The Open Group in the United States and other countries.

Linux is the registered trademark of Linus Torvalds in the U.S. and other countries.

Intel is a trademark of Intel Corporation in the U.S. and/or other countries.

Evernote is a trademark of Evernote Corporation and used under a license.

Each company whose software title is mentioned in this manual has a Software License Agreement specific to its proprietary programs.
Any trade names and product names of companies appearing on Brother products, related documents and any other materials are all trademarks or registered trademarks of those respective companies.

Related Information

- Before You Use Your Brother Machine

Important Note

- Do not use this product outside the country of purchase as it may violate the wireless telecommunication and power regulations of that country.
- Not all models are available in all countries.
- Windows XP in this document represents Windows XP Professional, Windows XP Professional x64 Edition and Windows XP Home Edition.
- Windows Server 2003 in this document represents Windows Server 2003, Windows Server 2003 x64 Edition, Windows Server 2003 R2 and Windows Server 2003 R2 x64 Edition.
- Windows Server 2008 in this document represents Windows Server 2008 and Windows Server 2008 R2.
- Unless otherwise specified, the screens in this manual are from Windows 7 and OS X v10.9.x. Screens on your computer may vary depending on your operating system.
- This documentation is for both MFC and DCP models. Read 'XXX-XXXX' as 'MFC/DCP-XXXX' (where XXXX is the name of your model).
- Not all features are available in countries subject to applicable export restrictions.

Related Information

- Before You Use Your Brother Machine

Introduction to Your Brother Machine

- Before Using Your Machine
- Control Panel Overview
- Touchscreen LCD Overview
- How to Navigate the Touchscreen LCD
- Settings Screen Overview
- Setting the Home Screen
- Access Brother Utilities (Windows)

Before Using Your Machine

Before attempting any printing operation, confirm the following:

- Make sure you have installed the Brother software and drivers.
- For USB or network cable users: Make sure the interface cable is physically secure.

Simultaneous printing, scanning and faxing

Your machine can print from your computer while sending or receiving a fax into memory or while scanning a document into the computer. Fax sending will not be stopped during printing from your computer. However, when the machine is copying or receiving a fax on paper, it pauses the printing operation, and then continues printing when copying or fax receiving has finished.

DCP models do not support the fax feature.

Firewall (Windows)

If your computer is protected by a firewall and you are unable to network print, network scan, or PC-FAX, you may need to configure the firewall settings. If you are using the Windows Firewall and you installed the Brother software and drivers from the CD-ROM, the necessary firewall settings have already been set. If you are using any other personal firewall software, see the User's Guide for your software or contact the software manufacturer.

Related Information

- Introduction to Your Brother Machine

Control Panel Overview

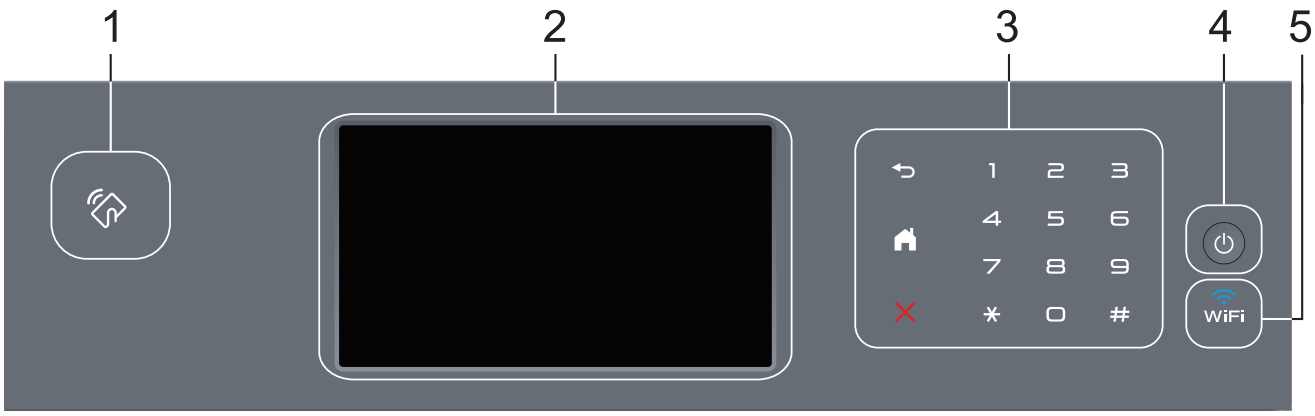

1. **Near Field Communication (NFC) Reader (available only for certain models)**

   You can use card authentication by touching the IC card to the NFC Reader on the control panel.

   If your Android™ device supports the NFC feature, you can print from your device or scan documents to your device in the same way.

2. **Touchscreen Liquid Crystal Display (LCD)**

   Access menus and options by pressing them on the touchscreen.

3. **Touchpanel**

   (Back)

   Press to go back to the previous menu.

   (Home)

   - Press to return to the Home screen.
   - While the machine is in Sleep Mode, the Home icon blinks.

   (Cancel)

   Press to cancel an operation (available when lit).

   Dial Pad (Numerical buttons)

   Press the numbers on the touchpanel to dial telephone or fax numbers and to enter the number of copies.

4. **Power On/Off**

   - Turn the machine on by pressing .
   - Turn the machine off by pressing and holding down . The LCD displays `[Shutting Down]` for a few seconds before going off. If you have an external telephone or TAD connected, it is always available.

5. **(WiFi)**

   (For infrastructure mode)

   When the **WiFi** light is on, your Brother machine is connected to a wireless access point. When the **WiFi** light blinks, the wireless connection is down, or your machine is in the process of connecting to a wireless access point.

   (For Ad-Hoc mode)

   The **WiFi** LED is always off.

Related Information

- Introduction to Your Brother Machine

Touchscreen LCD Overview

You can select from two types of screens to set the Home screen: Function screens and Shortcuts screen. When a Function screen is displayed, swipe left or right or press ◀ or ▶ to display the other Function screens.

The Home screen displays the machine's status when the machine is idle. This screen is also called the Ready Mode screen. When displayed, this screen indicates that your machine is ready for the next command.

If Active Directory Authentication or LDAP Authentication is enabled, the machine's control panel will be locked.

The available features vary depending on your model.

Function screens

The Function screens provide access to features, such as Fax, Copy and Scan.

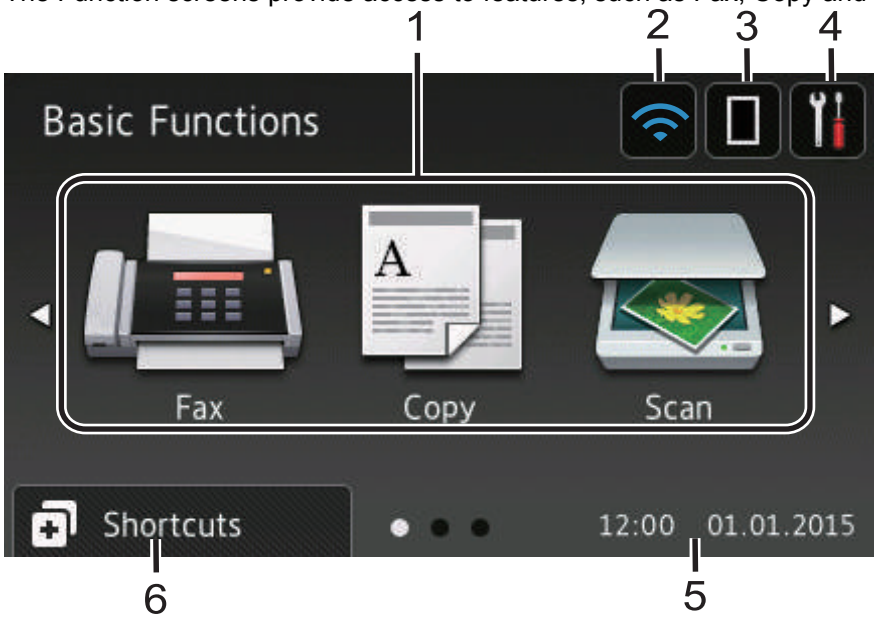

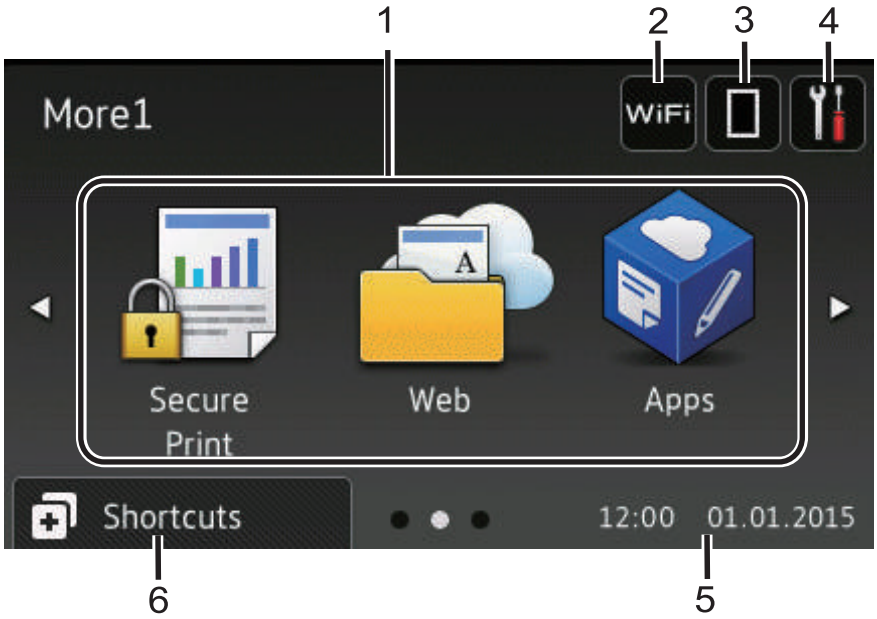

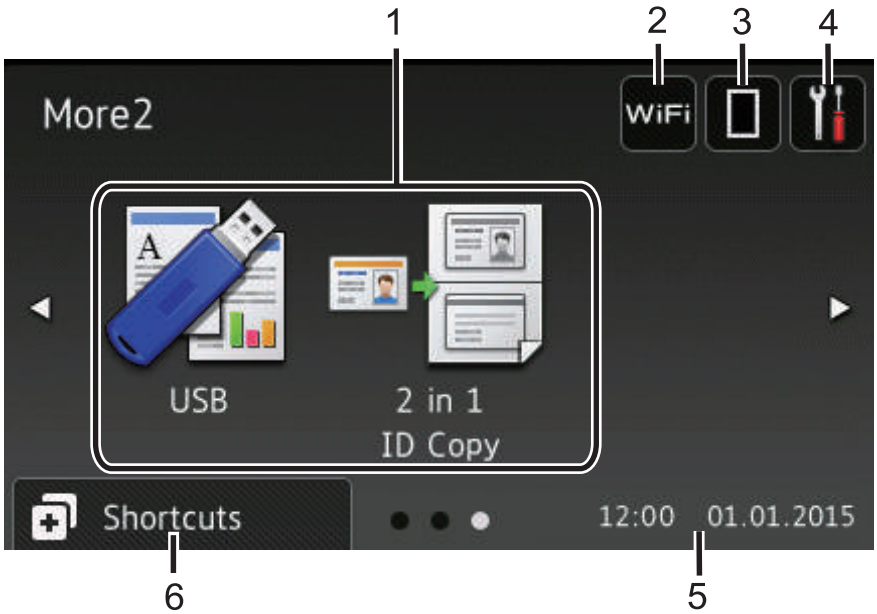

Shortcuts screen

Create Shortcuts for frequently-used operations, such as sending a fax, copying, scanning and using Web Connect.

Eight Shortcuts tabs are available with six Shortcuts on each Shortcuts tab. A total of 48 Shortcuts are available.

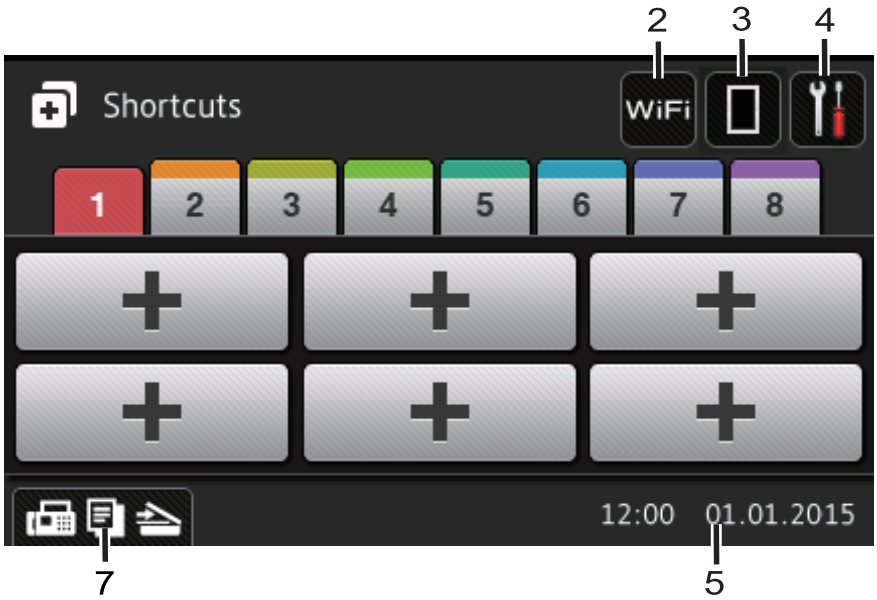

1. **Modes**

   - **[Fax]**

     Press to access Fax mode.

   - **[Copy]**

     Press to access Copy mode.

   - **[Scan]**

     Press to access Scan mode.

   - **[Secure Print]**

     Press to access the [Secure Print] option.

- **[Web]**

  Press to connect the Brother machine to an Internet service. For more detailed information, see the *Web Connect Guide*. Go to your model's **Manuals** page on the Brother Solutions Center at support.brother.com to download the guide.

- **[Apps]**

  Press to connect the Brother machine to the Brother Apps service. For more detailed information, see the *Web Connect Guide*. Go to your model's **Manuals** page on the Brother Solutions Center at support.brother.com to download the guide.

- **[USB]**

  Press to access the Direct Print and Scan to USB menus.

- **[2 in 1 ID Copy]**

  Press to access the 2 in 1 ID Copy option.

2. WiFi or **(Wireless Status)**

   Press to configure wireless settings.

   If you are using a wireless connection, a four-level indicator displays the current wireless signal strength.

3. **(Toner)**

   Displays the remaining toner life. Press to access the [Toner] menu.

4. **(Settings)**

   Press to access the [Settings] menu.

   If Setting Lock has been turned on, a lock icon appears on the LCD. You must unlock the machine to change settings.

5. **Date & Time**

   Displays the date and time set on the machine.

6. **[Shortcuts]**

   Press to access the [Shortcuts] screen.

7. **(Function screens)**

   Press to access the Function screens.

New Fax

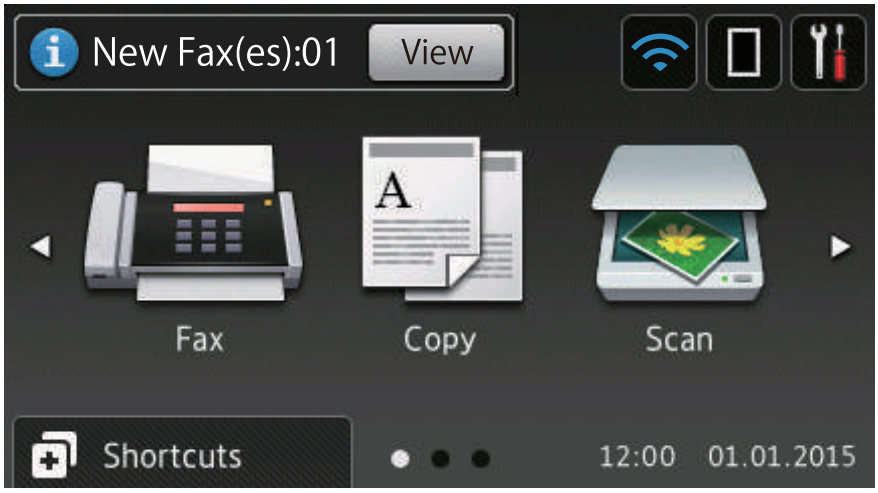

When [Fax Preview] is set to [On], the number of new faxes you received into the memory appears at the top of the screen.

Warning icon

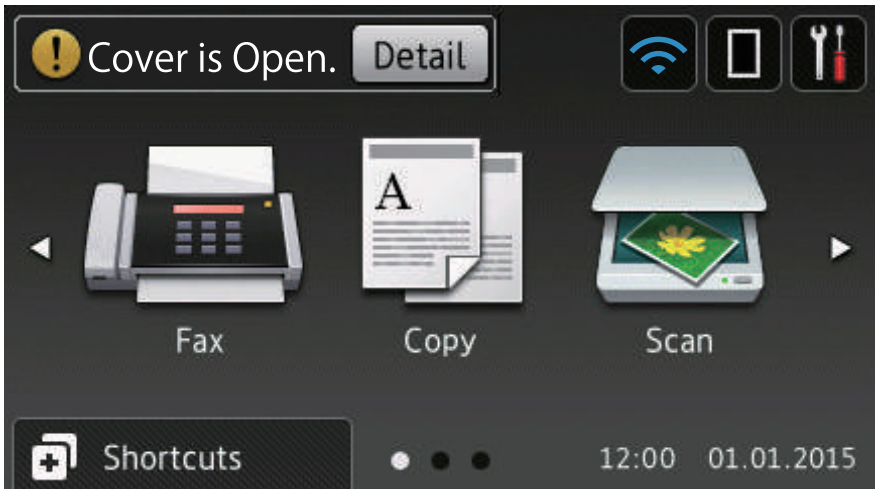

The warning icon appears when there is an error or maintenance message; press Detail to view it, and then press to return to Ready Mode.

NOTE

This product adopts the font of ARPHIC TECHNOLOGY CO., LTD.

Related Information

- Introduction to Your Brother Machine

How to Navigate the Touchscreen LCD

Press your finger on the LCD to operate it. To display and access all the options, swipe left, right, up, down or press ◀ ▶ or ▲ ▼ on the LCD to scroll through them.

The following steps explain how to change a machine setting. In this example, the LCD Backlight setting is changed from [Light] to [Med].

IMPORTANT

DO NOT press the LCD with a sharp object, such as a pen or stylus. It may damage the machine.

NOTE

DO NOT touch the LCD immediately after plugging in the power cord or turning on the machine. Doing this may cause an error.

1. Press [Settings].
2. Press [All Settings].
3. Swipe up or down or press ▲ or ▼ to display the [General Setup] option, and then press [General Setup].

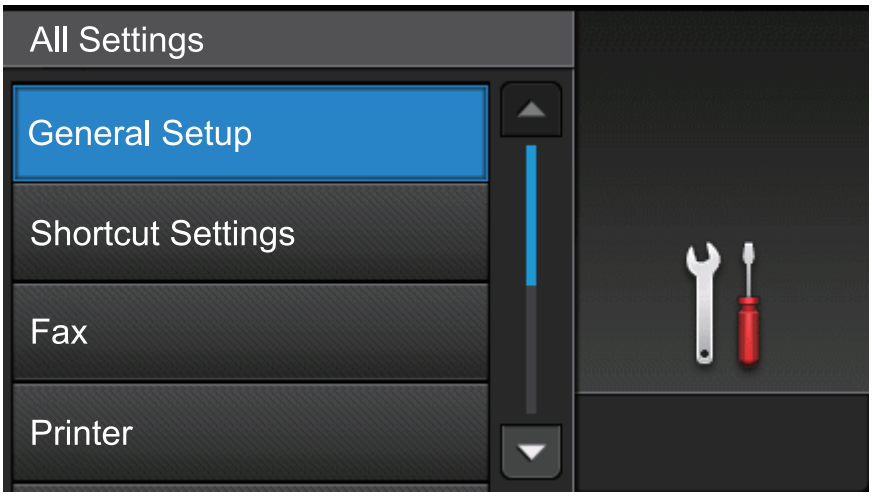

4. Swipe up or down or press ▲ or ▼ to display the [LCD Settings] option, and then press [LCD Settings].

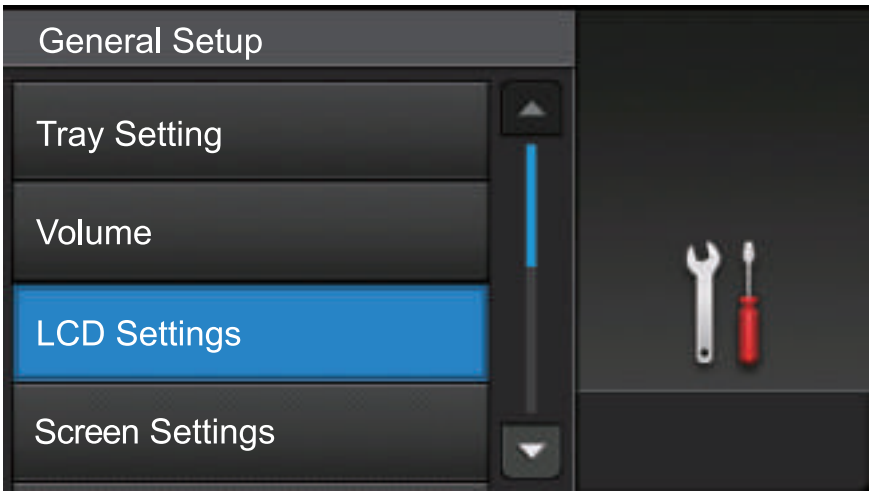

5. Press [Backlight].

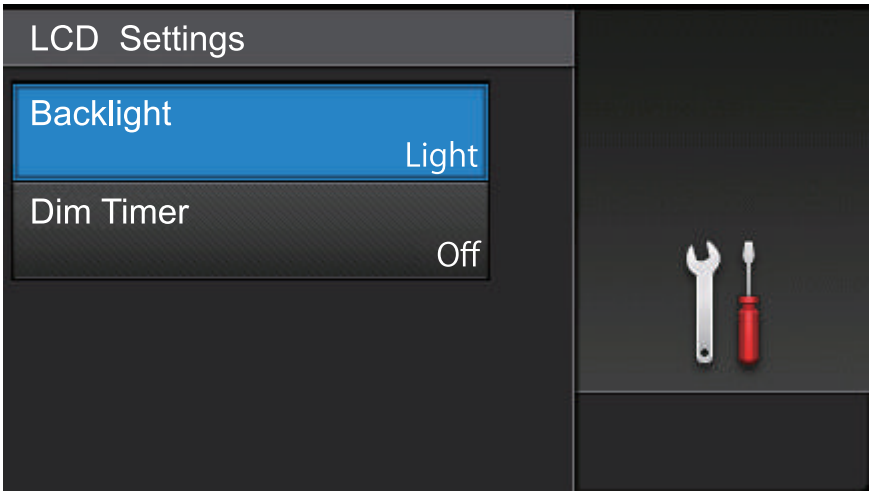

6. Press [Med].

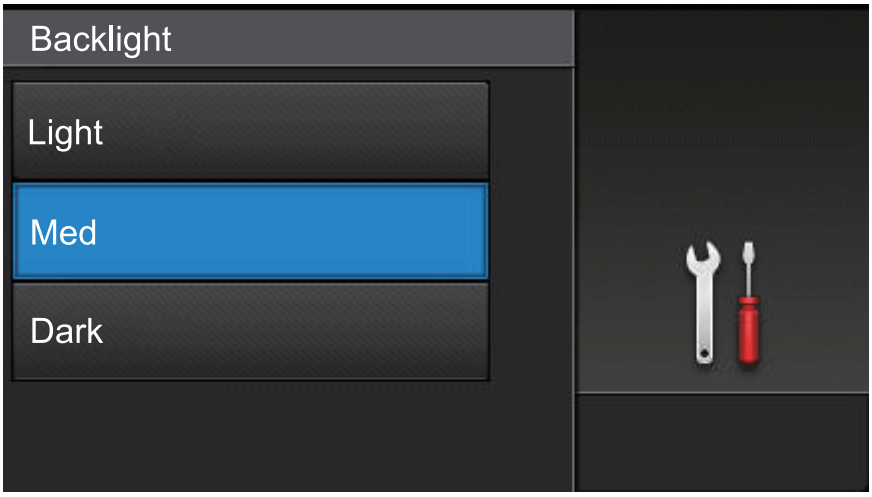

7. Press .

Related Information

- Introduction to Your Brother Machine

Settings Screen Overview

Press to view the current machine status on the LCD.

Use the Settings menu to access all of your Brother machine's settings.

The available features vary depending on your model.

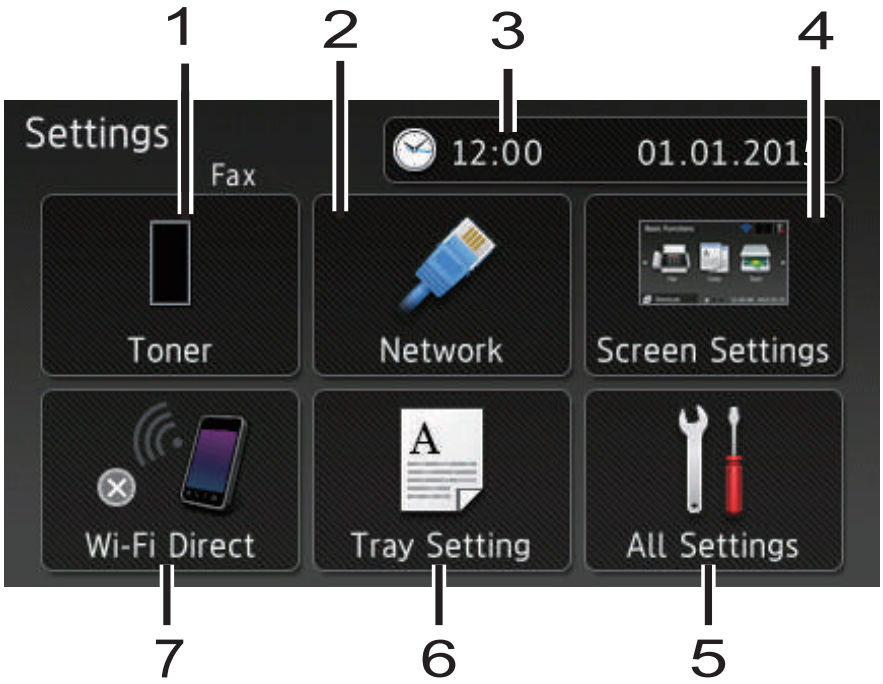

1. **Toner**
   - Displays the remaining toner life.
   - Press to access the `[Toner]` menu.
2. **Network (For wired network models)**
   - Press to set up a network connection.
   - A four level indicator on the screen displays the current wireless signal strength if you are using a wireless connection.
3. **Date & Time**

   Displays the date and time set on the machine.

   Press to access the `[Date & Time]` menu.
4. **Screen Settings**

   Press to access the `[Screen Settings]` menu.
5. **All Settings**

   Press to access a menu of all machine settings.
6. **Tray Setting**

   Press to change the paper size and paper type settings.
7. **Wi-Fi Direct (For wireless network models)**

   Press to set up a Wi-Fi Direct network connection.

   Fax Preview (For MFC models without wireless network functionality)
   - Display the Fax Preview status.
   - Press to access the Fax Preview setting.

   Beep Volume (For DCP models without wireless network functionality)

   Press to access the volume setting.

Related Information

- Introduction to Your Brother Machine

Setting the Home Screen

Set the Home screen to either [Basic Functions], [More1], [More2], [Shortcuts 1], [Shortcuts 2], [Shortcuts 3], [Shortcuts 4], [Shortcuts 5], [Shortcuts 6], [Shortcuts 7] or [Shortcuts 8].

When the machine is idle or you press , the touchscreen will return to the screen you set.

1. Press [Settings] > [Screen Settings] > [Home Screen].
2. Swipe up or down or press ▲ or ▼ to display the screen settings, and then press the setting you want.
3. Press .

   The machine will go to your chosen Home screen.

Related Information

- Introduction to Your Brother Machine

Access Brother Utilities (Windows)

Brother Utilities is an application launcher that offers convenient access to all Brother applications installed on your computer.

1. Do one of the following:
   - (Windows XP, Windows Vista, Windows 7, Windows Server 2003, Windows Server 2008 and Windows Server 2008 R2)

     Click **(Start)** > **All Programs** > **Brother** > **Brother Utilities**.
   - (Windows 8 and Windows Server 2012)

     Tap or click (**Brother Utilities**) either on the **Start** screen or the desktop.
   - (Windows 8.1 and Windows Server 2012 R2)

     Move your mouse to the lower left corner of the **Start** screen and click (if you are using a touch-based device, swipe up from the bottom of the **Start** screen to bring up the **Apps** screen).

     When the **Apps** screen appears, tap or click (**Brother Utilities**).
2. Select your machine (where XXXX is the name of your model).

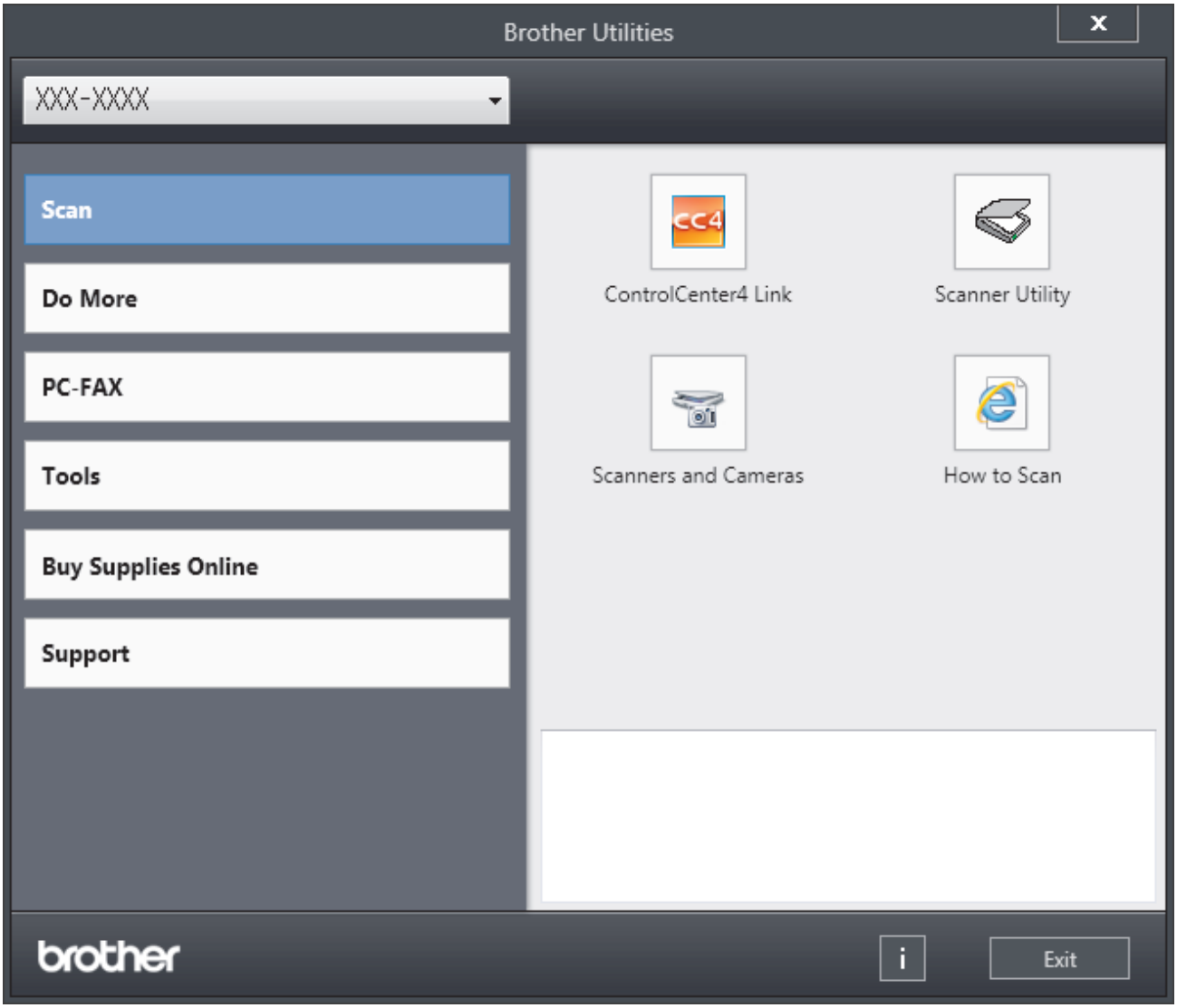

3. Choose the operation you want to use.

Related Information

- Introduction to Your Brother Machine
- Uninstall the Brother Software and Drivers (Windows)

Uninstall the Brother Software and Drivers (Windows)

1. Do one of the following:
   - (Windows XP, Windows Vista, Windows 7, Windows Server 2003, Windows Server 2008 and Windows Server 2008 R2)

     Click **(Start)** > **All Programs** > **Brother** > **Brother Utilities**.
   - (Windows 8 and Windows Server 2012)

     Tap or click (**Brother Utilities**) either on the **Start** screen or the desktop.
   - (Windows 8.1 and Windows Server 2012 R2)

     Move your mouse to the lower left corner of the **Start** screen and click (if you are using a touch-based device, swipe up from the bottom of the **Start** screen to bring up the **Apps** screen).

     When the **Apps** screen appears, tap or click (**Brother Utilities**).
2. Click the drop-down list, and then select your model name (if not already selected). Click **Tools** in the left navigation bar, and then click **Uninstall**.

   Follow the instructions in the dialog box to uninstall the software and drivers.

Related Information

- Access Brother Utilities (Windows)

Paper Handling

- Load Paper
- Paper Settings
- Change the Tray Size for 2-sided Printing
- Load Documents
- Unscannable and Unprintable Areas
- Using Special Paper

Load Paper

- Load and Print Using the Paper Tray
- Load and Print Using the Multi-purpose Tray (MP Tray)

Load and Print Using the Paper Tray

- Load Plain Paper, Letterhead, Coloured Paper, Thin Paper and Recycled Paper in the Paper Tray
- Load Thick Paper in the Paper Tray
- Printing Problems
- Error and Maintenance Messages

Load Plain Paper, Letterhead, Coloured Paper, Thin Paper and Recycled Paper in the Paper Tray

- If the Check Size setting is set to On and you pull the paper tray out of the machine, a message appears on the LCD asking if you want to change the paper size and paper type. Change the paper size and paper type settings if needed, following the LCD instructions.
- When you load a different size and type of paper in the tray, you must change the Paper Size and Paper Type settings in the machine or on your computer, also.

1. Pull the paper tray completely out of the machine.

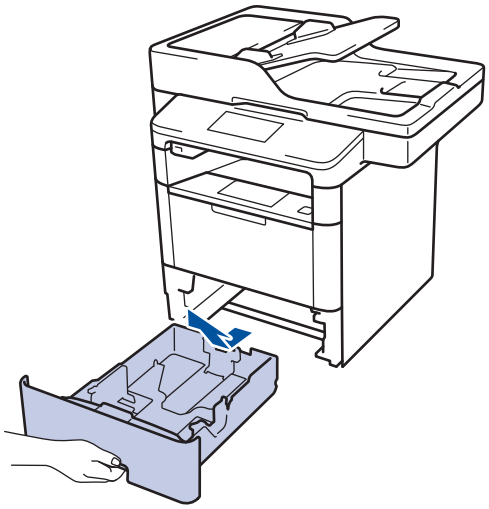

2. Press and slide the paper guides to fit the paper.

   Press the green release levers to slide the paper guides.

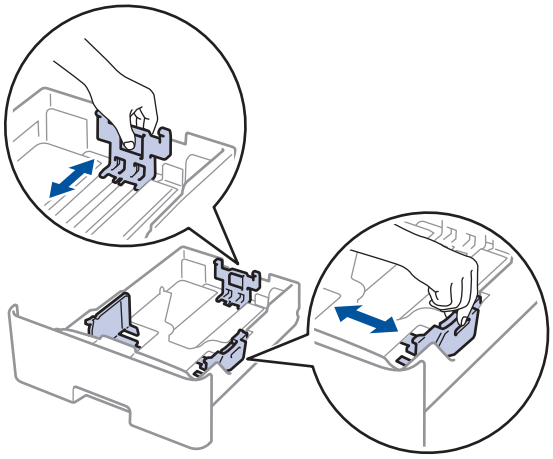

For Legal or Folio size paper, press the release button (1) in the bottom of the paper tray or the release lever (2) in the back of the tray, and then pull out the back of the paper tray. (Legal and Folio size paper are not available in some regions.)

For trays with a release button:

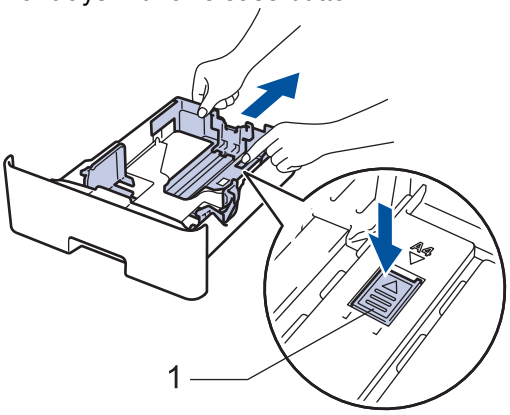

For trays with a release lever:

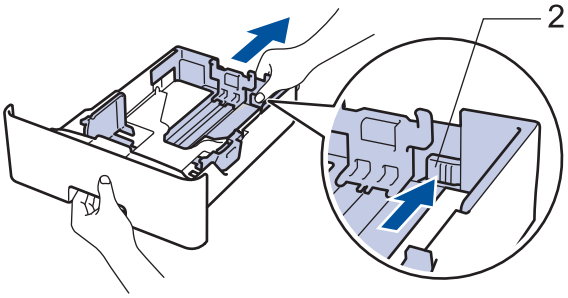

3. Fan the stack of paper well.
4. Load paper in the paper tray with the printing surface *face down*.

   When you use Letterhead or Preprinted paper, load the paper in the correct orientation as shown in the illustrations.

Paper Orientation for Letterhead and Preprinted Paper

For 1-sided printing

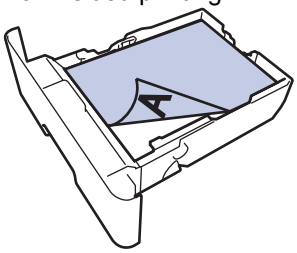

- face down
- top edge toward the front of the paper tray

For automatic 2-sided printing (long edge binding)

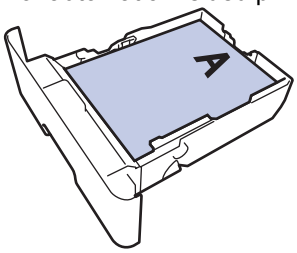

- face up
- bottom edge toward the front of the paper tray

- DO NOT load different sizes and types of paper in the paper tray at the same time. Doing this may cause the paper to jam or misfeed.
- When you use Letterhead or Preprinted paper for 2-sided printing, change the machine's setting by completing the following step:
  - Press [Settings] > [All Settings] > [Printer] > [2-sided] > [Single Image] > [2-sided Feed].

5. Make sure the paper is below the maximum paper mark (▼▼▼).

   Overfilling the paper tray will cause paper jams.

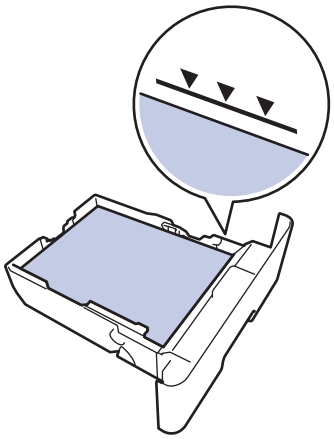

6. Slowly push the paper tray completely into the machine.
7. Lift the support flap to prevent paper from sliding off the output tray.

Related Information

- Load and Print Using the Paper Tray

Load Thick Paper in the Paper Tray

- If the Check Size setting is set to On and you pull the paper tray out of the machine, a message appears on the LCD asking if you want to change the paper size and paper type. Change the paper size and paper type settings if needed, following the LCD instructions.
- When you load a different size and type of paper in the tray, you must change the Paper Size and Paper Type settings in the machine or on your computer, also.

1. Pull the paper tray completely out of the machine.

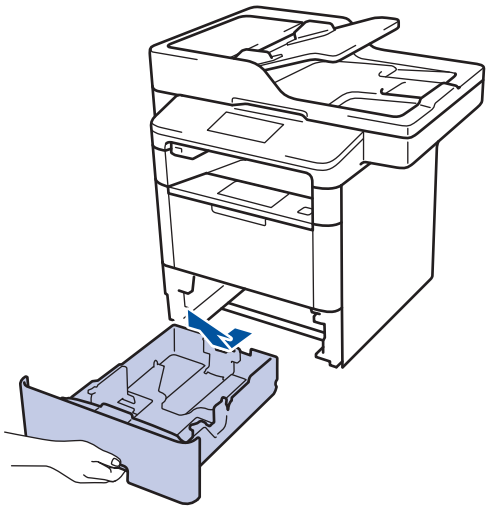

2. Press and slide the paper guides to fit the paper.

   Press the green release levers to slide the paper guides.

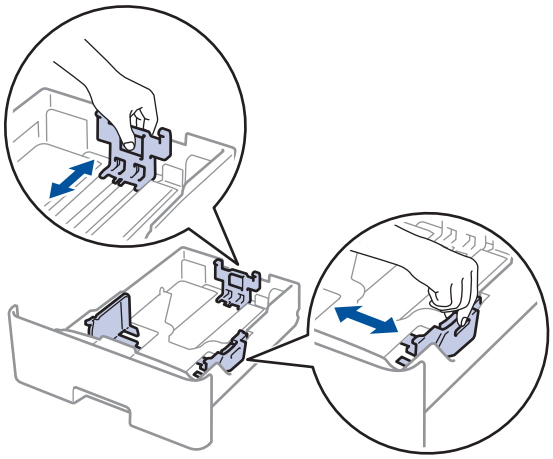

For Legal or Folio size paper, press the release button (1) in the bottom of the paper tray or the release lever (2) in the back of the tray, and then pull out the back of the paper tray. (Legal and Folio size paper are not available in some regions.)

For trays with a release button:

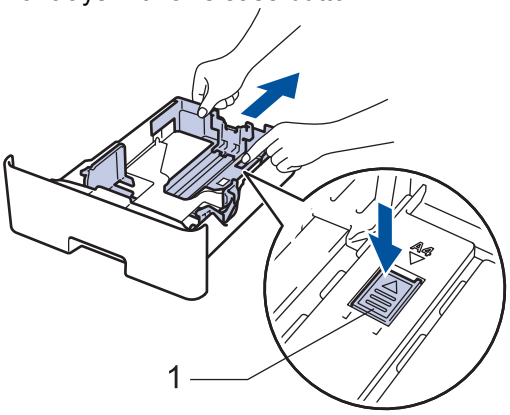

For trays with a release lever:

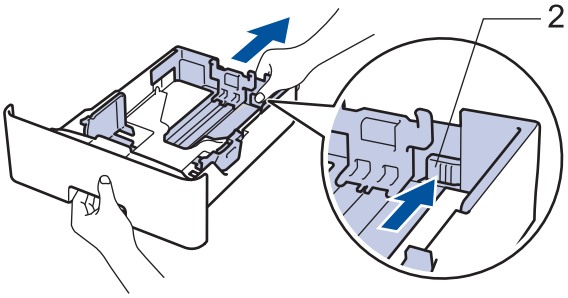

3. Fan the stack of paper well.
4. Load paper in the paper tray with the printing surface *face down*.

DO NOT load different sizes and types of paper in the paper tray at the same time. Doing this may cause the paper to jam or misfeed.

5. Make sure the paper is below the maximum paper mark (▼▼▼).

   Overfilling the paper tray will cause paper jams.

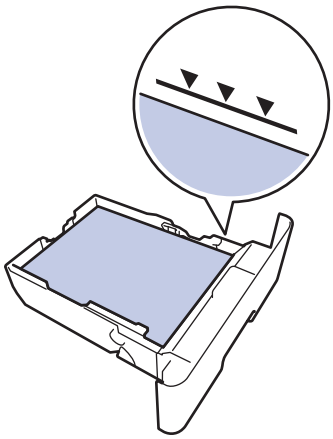

6. Slowly push the paper tray completely into the machine.
7. Open the machine's back cover (the face up output tray).

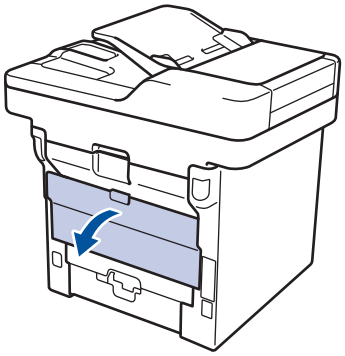

8. Open the paper stopper (Available only for certain models).

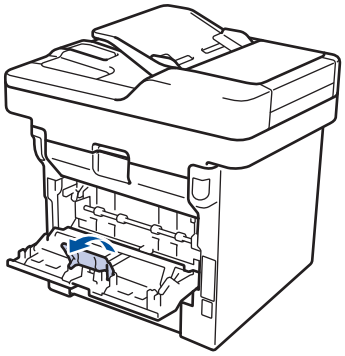

9. Send your print job to the machine.

Change your print preferences in the Print dialog box before sending the print job from your computer.

10. Close the paper stopper (Available only for certain models).
11. Close the back cover (the face up output tray) until it locks in the closed position.

Related Information

- Load and Print Using the Paper Tray

Load and Print Using the Multi-purpose Tray (MP Tray)

You can load up to ten envelopes, letterhead, coloured paper, thin paper, thick paper, thicker paper, recycled paper, Bond paper, labels, or up to 50 sheets of plain paper in the MP tray.

- Load Paper in the Multi-purpose Tray (MP Tray)
- Load and Print Thick Paper and Labels Using the MP Tray
- Load and Print on Envelopes Using the MP Tray
- Printing Problems
- Error and Maintenance Messages

Load Paper in the Multi-purpose Tray (MP Tray)

When you load a different size and type of paper in the tray, you must change the Paper Size and Paper Type settings in the machine or on your computer, also.

1. Lift the support flap to prevent paper from sliding off the face down output tray.

2. Open the MP tray and lower it gently.

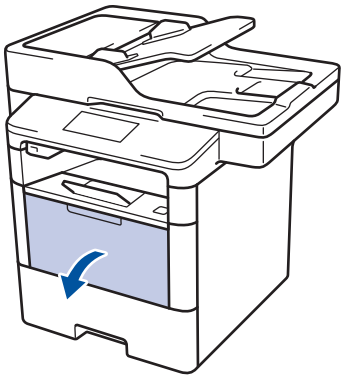

3. Pull out the MP tray support (1) and unfold the flap (2).

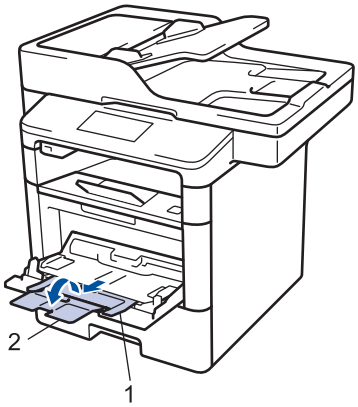

4. Slide the MP tray paper guides to fit the width of the paper you are using. If the paper guide on the right side has a lever, press it and slide the paper guide.

5. Load paper with the printing surface *face up* in the MP tray. When you use Letterhead or Preprinted paper, load the paper in the correct orientation as shown in the illustrations.

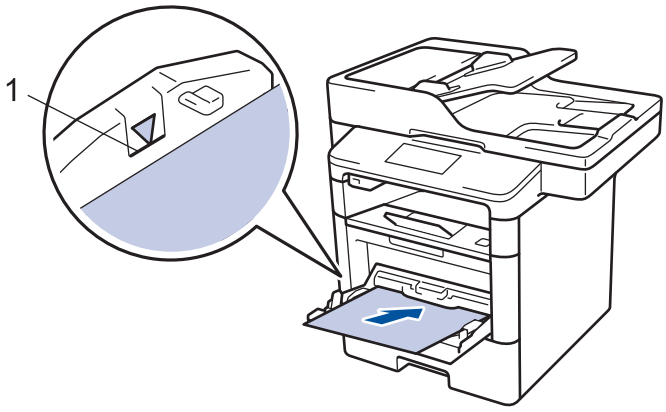

Make sure the paper is below the maximum paper mark (1).

Paper Orientation for Letterhead and Preprinted Paper

For 1-sided printing

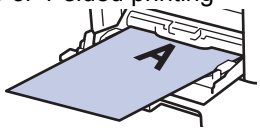

- face up
- top edge first

For automatic 2-sided printing (long edge binding)

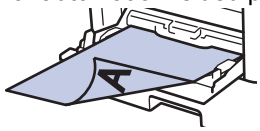

- face down
- bottom edge first

When you use Letterhead or Preprinted paper for 2-sided printing, change the machine's setting by completing the following step:

- Press [Settings] > [All Settings] > [Printer] > [2-sided] > [Single Image] > [2-sided Feed].

Related Information

- Load and Print Using the Multi-purpose Tray (MP Tray)

Load and Print Thick Paper and Labels Using the MP Tray

When the back cover (face up output tray) is pulled down, the machine has a straight paper path from the MP tray through to the back of the machine. Use this paper feed and output method when you print on thick paper or labels.

When you load a different size and type of paper in the tray, you must change the Paper Size and Paper Type settings in the machine or on your computer, also.

1. Open the machine's back cover (the face up output tray).

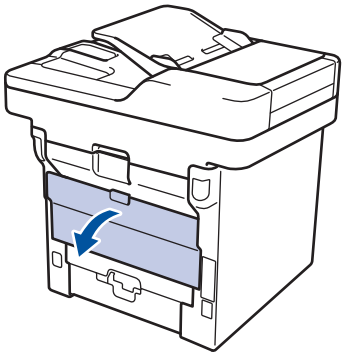

2. Open the paper stopper (Available only for certain models).

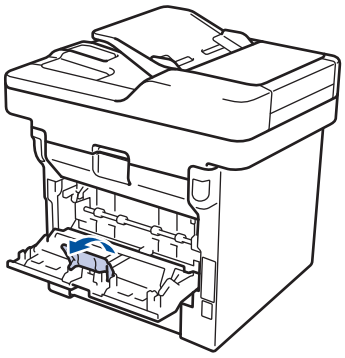

3. On the front of the machine, open the MP tray and lower it gently.

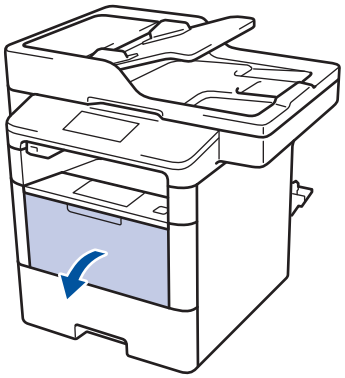

4. Pull out the MP tray support (1) and unfold the flap (2).

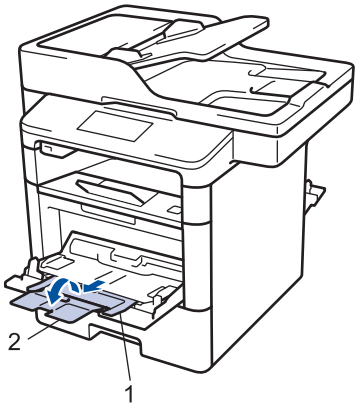

5. Slide the MP tray paper guides to fit the width of the paper that you are using. If the paper guide on the right side has a lever, press it and slide the paper guide.

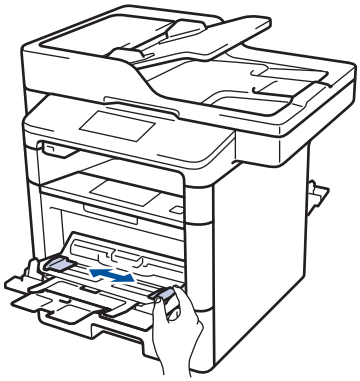

6. Load paper or labels in the MP tray.

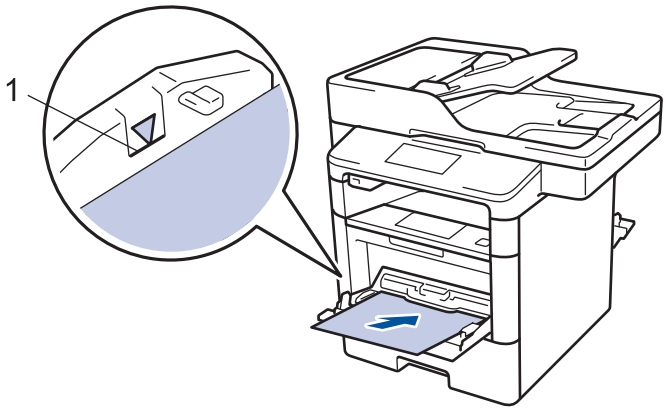

- Make sure the paper is below the maximum paper mark (1).
- Load paper into the MP tray with the printing surface face up.

7. Send your print job to the machine.

Change your print preferences in the Print screen before sending the print job from your computer.

8. Close the paper stopper (Available only for certain models).
9. Close the back cover (the face up output tray) until it locks in the closed position.

Related Information

- Load and Print Using the Multi-purpose Tray (MP Tray)

Load and Print on Envelopes Using the MP Tray

You can load up to ten envelopes in the MP tray.

Before loading, press the corners and sides of the envelopes to make them as flat as possible.

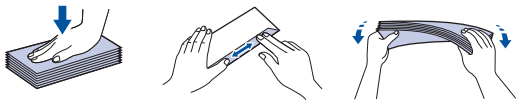

When you load a different size and type of paper in the tray, you must change the Paper Size and Paper Type settings in the machine or on your computer, also.

1. Open the machine's back cover (the face up output tray).

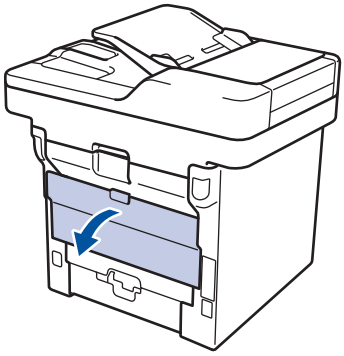

2. Open the paper stopper (Available only for certain models).

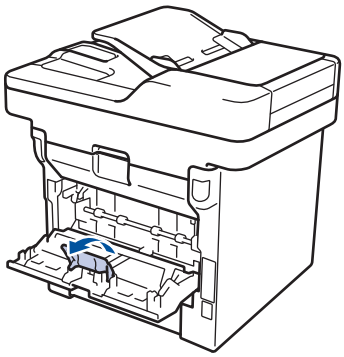

3. On the front of the machine, open the MP tray and lower it gently.

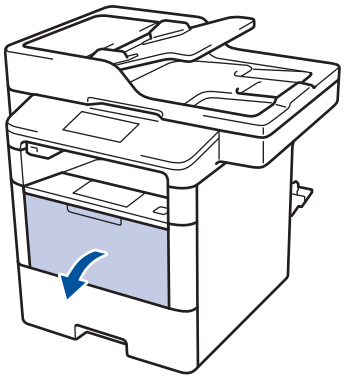

4. Pull out the MP tray support (1) and unfold the flap (2).

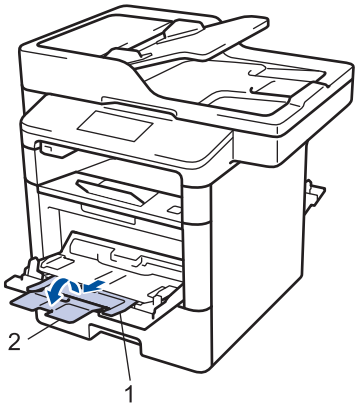

5. Slide the MP tray paper guides to fit the width of the envelopes that you are using. If the paper guide on the right side has a lever, press it and slide the paper guide.

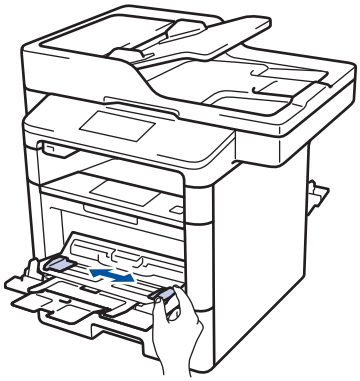

6. Load envelopes in the MP tray.

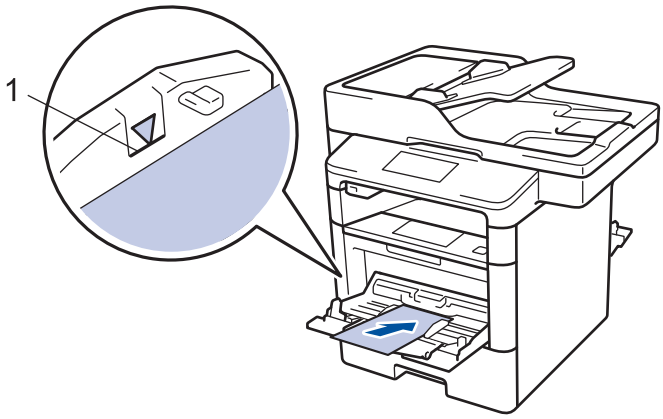

Load up to 10 envelopes in the MP tray with the printing surface face up. Make sure the envelopes are below the maximum paper mark (1). Loading more than 10 envelopes may cause paper jams.

7. Send your print job to the machine.

Change your print preferences in the Print dialog box before sending the print job from your computer.

Settings	Options for Envelopes
Paper Size	**Com-10** **DL** **C5** **Monarch**
Media Type	**Envelopes** **Env. Thick** **Env. Thin**

8. Close the paper stopper (Available only for certain models).
9. Close the back cover (the face up output tray) until it locks in the closed position.

Related Information

- Load and Print Using the Multi-purpose Tray (MP Tray)

Paper Settings

- Change the Paper Size and Paper Type
- Select the Tray to Be Used For Printing
- Change the Check Paper Size Setting

Change the Paper Size and Paper Type

When you change the size and type of the paper you load in the tray, you must change the Paper Size and Paper Type settings on the LCD at the same time.

1. Press [Settings] > [All Settings] > [General Setup] > [Tray Setting] > [Paper Type].
2. Swipe up or down or press ▲ or ▼ to display the paper tray options, and then press the option you want.
3. Swipe up or down or press ▲ or ▼ to display the paper type options, and then press the option you want.
4. Press .
5. Swipe up or down or press ▲ or ▼ to display the [Paper Size] option, and then press [Paper Size].
6. Swipe up or down or press ▲ or ▼ to display the paper tray options, and then press the option you want.
7. Swipe up or down or press ▲ or ▼ to display the paper size options, and then press the option you want.
8. Press .

Related Information

- Paper Settings

Select the Tray to Be Used For Printing

Change the default tray the machine will use for printing copies, received faxes, and print jobs from your computer.

DCP models do not support the fax feature.

1. Press [Settings] > [All Settings] > [General Setup] > [Tray Setting].
2. Swipe up or down or press ▲ or ▼ to display the [Tray Use: Copy], [Tray Use: Fax], or [Tray Use: Print] option, and then press the option you want.
3. Swipe up or down or press ▲ or ▼ to display the option you want, and then press it. For example, when you select the [MP>T1] option, the machine pulls paper from the MP tray until it is empty, and then from Tray 1.
4. Press .

- When you make a copy using the ADF and give priority to multiple trays, the machine looks for the tray with the most suitable paper and pulls paper from that tray.
- When you make a copy using the scanner glass, your document is copied from the higher priority tray even if more suitable paper is in another paper tray.
- (MFC models) Use the following sizes of paper for printing faxes: Letter, A4, Legal, Folio, Mexico Legal or India Legal. When an appropriate size is not in any of the trays, the machine stores received faxes and [Size Mismatch] appears on the touchscreen.
- (MFC models) If the tray is out of paper and received faxes are in the machine's memory, [No Paper] appears on the touchscreen. Load paper in the empty tray.

Related Information

- Paper Settings

Change the Check Paper Size Setting

When you turn on your machine's Check Size setting, the machine displays a message when you remove a paper tray or load paper using the MP tray, asking if you changed the paper size and paper type.

The default setting is On.

1. Press [Settings] > [All Settings] > [General Setup] > [Tray Setting] > [Check Size].
2. Press [On] or [Off].
3. Press .

Related Information

- Paper Settings

Change the Tray Size for 2-sided Printing

When you print on both sides of the paper, you must set the 2-sided tray size to the paper size. If you do not set the 2-sided tray, the paper will not feed correctly, resulting in a skewed printout or a paper jam.

This feature is not available in some countries.

1. Slide the lever on the 2-sided tray to the correct paper size.

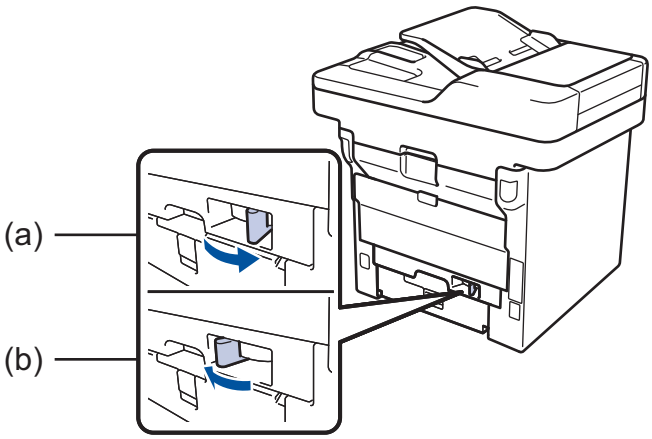

a. A4 (for A4)

b. Letter (for Letter, Legal, Mexico Legal, India Legal and Folio)

Related Information

- Paper Handling

Load Documents

You can send a fax, make copies and scan from the Automatic Document Feeder (ADF) and from the scanner glass.

- Load Documents in the Automatic Document Feeder (ADF)
- Load Documents on the Scanner Glass

Load Documents in the Automatic Document Feeder (ADF)

Use the ADF when copying or scanning multiple-page, standard-sized documents.

- The ADF can hold the following pages and feed each sheet individually:
  - (MFC-L5700DN/MFC-L5755DW)
    up to 50 pages
  - (DCP-L5600DN/MFC-L5900DW/MFC-L6700DW)
    up to 70 pages
  - (MFC-L6900DW)
    up to 80 pages
- Use standard 80 g/m^2 paper.
- Make sure documents with correction fluid or written in ink are completely dry.

IMPORTANT

- DO NOT leave thick documents on the scanner glass. If you do this, the ADF may jam.
- DO NOT use paper that is curled, wrinkled, folded, ripped, stapled, paper-clipped, pasted, or taped.
- DO NOT use cardboard, newspaper, or fabric.
- To avoid damaging your machine while using the ADF, DO NOT pull on the document while it is feeding.

Document Sizes Supported

Length:	147.3 to 355.6 mm
Width:	105 to 215.9 mm
Weight:	64 to 90 g/m^2

1. Unfold the ADF document output support flap.

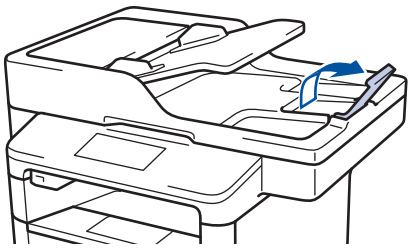

2. Fan the pages well.
3. Stagger the pages of your document and load it *face up* and *top edge first*, into the ADF as shown in the illustration.

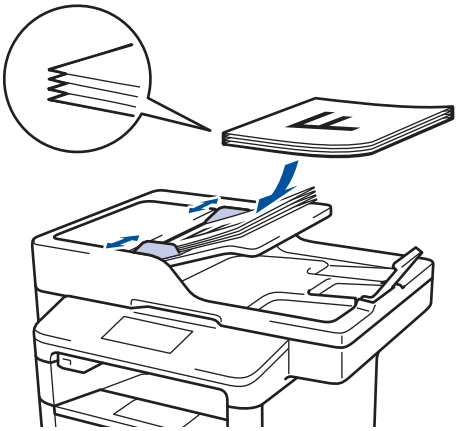

4. Adjust the paper guides to fit the width of your document.

Related Information

- Load Documents

Load Documents on the Scanner Glass

Use the scanner glass to fax, copy, or scan one page at a time.

Document Sizes Supported

Length:	• (MFC-L5700DN/MFC-L5755DW) Up to 300 mm • (DCP-L5600DN/MFC-L5900DW/MFC-L6700DW/MFC-L6900DW) Up to 355.6mm
Width:	Up to 215.9 mm
Weight:	Up to 2 kg

To use the scanner glass, the ADF must be empty.

1. Lift the document cover.
2. Place the document on the scanner glass *face down*.

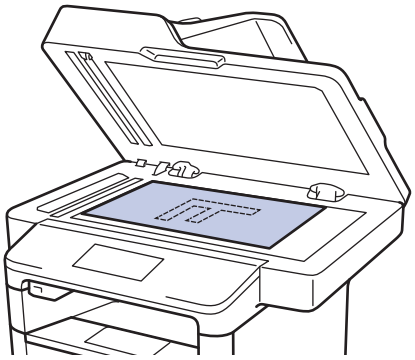

3. Place the corner of the page in the upper left corner of the scanner glass.

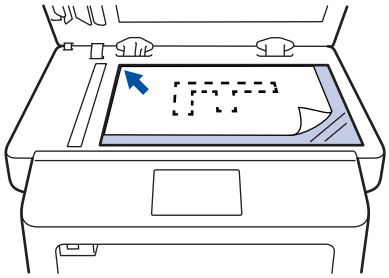

4. Close the document cover.
   If the document is a book or is thick, gently press on the document cover.

Related Information

- Load Documents

Unscannable and Unprintable Areas

The figures in the table show maximum unscannable and unprintable areas from the edges of the most commonly-used paper sizes. These measurements may vary depending on the paper size or settings in the application you are using.

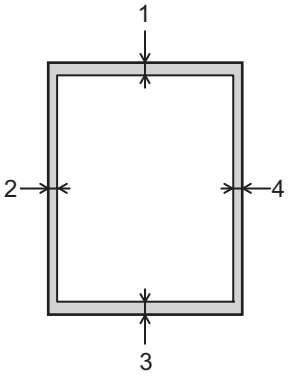

Do not attempt to scan, copy, or print into these areas; your output will not reflect anything in these areas.

Usage	Document Size	Top (1) Bottom (3)	Left (2) Right (4)
Fax (Sending)	Letter, Legal	3 mm	4 mm
	A4	3 mm	(ADF) 1 mm (Scanner Glass) 3 mm
Copy [1]	Letter, Legal	4 mm	4 mm
	A4	4 mm	3 mm
Scan	Letter	3 mm	3 mm
	A4	3 mm	Approximately 3 mm
	Legal	Approximately 3 mm	Approximately 3 mm
Print	Letter, Legal	4.2 mm	4.2 mm
	A4	4.2 mm	4.2 mm

Related Information

- Paper Handling
- Printing Problems

[1] a single copy or a 1 in 1 copy

Using Special Paper

Always test paper samples before purchasing them to ensure desirable performance.

- DO NOT use inkjet paper; it may cause a paper jam or damage your machine.
- If you use bond paper, paper with a rough surface, or paper that is wrinkled or creased, the paper may exhibit degraded performance.

Store paper in its original packaging and keep it sealed. Keep the paper flat and away from moisture, direct sunlight and heat.

IMPORTANT

Some types of paper may not perform well or may cause damage to your machine.

DO NOT use paper:

- that is highly textured
- that is extremely smooth or shiny
- that is curled or warped
- that is coated or has a chemical finish
- that is damaged, creased or folded
- that exceeds the recommended weight specification in this guide
- with tabs and staples
- with letterheads using low temperature dyes or thermography
- that is multipart or carbonless
- that is designed for inkjet printing

If you use any of the types of paper listed above, they may damage your machine. This damage is not covered under any Brother warranty or service agreement.

Related Information

- Paper Handling

Print

- Print from Your Computer (Windows)
- Print from Your Computer (Mac)
- Print One Page Duplicates on Different Types of Paper
- Cancel a Print Job
- Test Print

Print from Your Computer (Windows)

- Print a Document (Windows)
- Print More Than One Page on a Single Sheet of Paper (N in 1) (Windows)
- Print as a Poster (Windows)
- Print on Both Sides of the Paper (Windows)
- Print as a Booklet (Windows)
- Secure Print (Windows)
- Use a Macro from Your Computer (Windows)
- Use a Preset Print Profile (Windows)
- Change the Default Print Settings (Windows)
- Print a Document Using the BR-Script3 Printer Driver (PostScript® 3™ Language Emulation) (Windows)
- Monitor the Status of the Machine from Your Computer (Windows)
- Print Settings (Windows)

Print a Document (Windows)

1. Select the print command in your application.
2. Select **Brother XXX-XXXX** (where XXXX is the name of your model), and then click the printing properties or preferences button.

   The printer driver window appears.

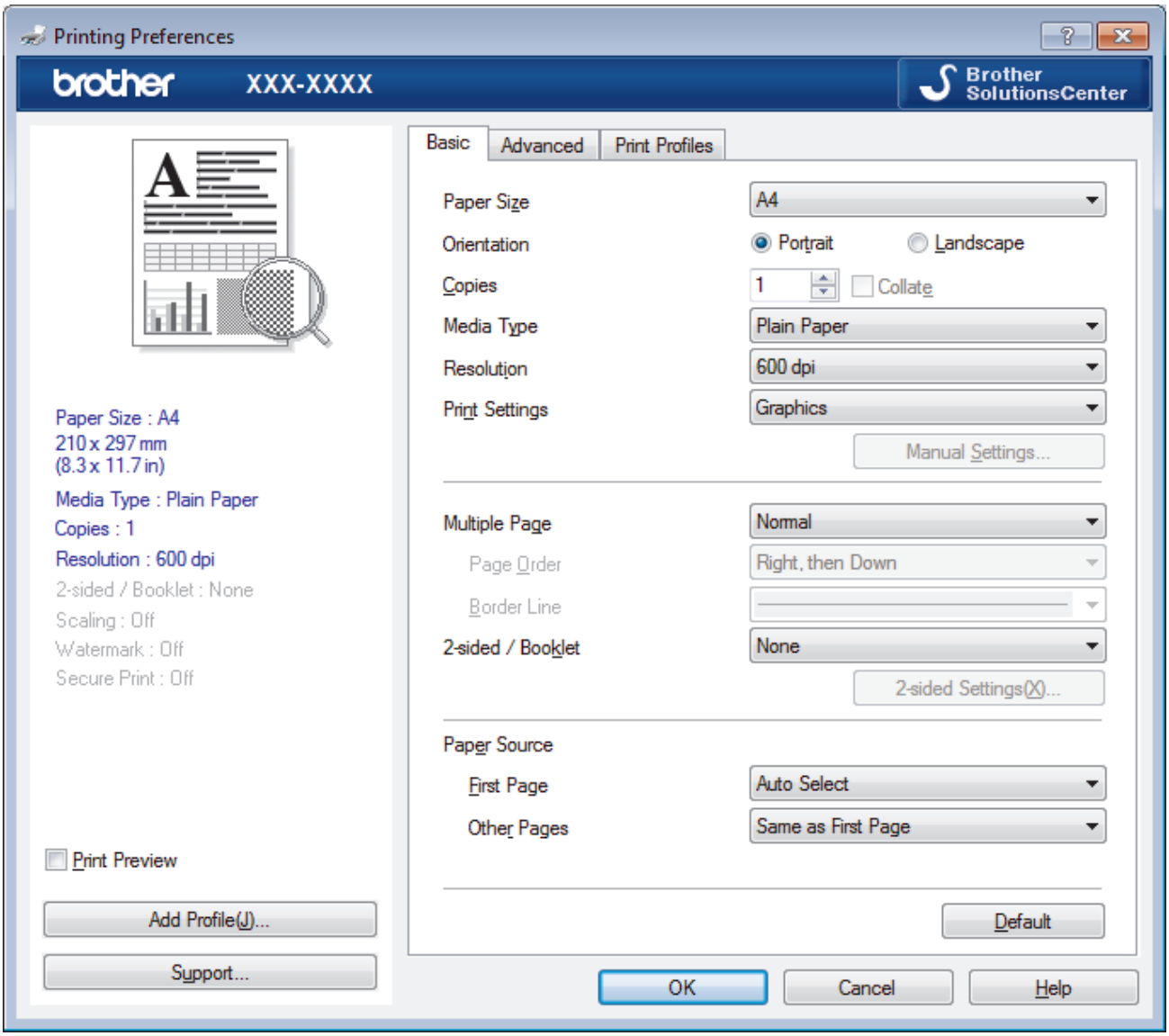

3. Make sure you have loaded the correct size paper in the paper tray.
4. Click the **Paper Size** drop-down list, and then select your paper size.
5. In the **Orientation** field, select the **Portrait** or **Landscape** option to set the orientation of your printout.

   If your application contains a similar setting, we recommend that you set the orientation using the application.

6. Type the number of copies (1-999) you want in the **Copies** field.
7. Click the **Media Type** drop-down list, and then select the type of paper you are using.
8. To print multiple pages on a single sheet of paper or print one page of your document on multiple sheets, click the **Multiple Page** drop-down list, and then select your options.
9. Change other printer settings if needed.
10. Click **OK**.
11. Complete your print operation.

Related Information

- Print from Your Computer (Windows)
- Print Settings (Windows)

Print More Than One Page on a Single Sheet of Paper (N in 1) (Windows)

1. Select the print command in your application.
2. Select **Brother XXX-XXXX** (where XXXX is the name of your model), and then click the printing properties or preferences button.

   The printer driver window appears.
3. In the **Orientation** field, select the **Portrait** or **Landscape** option to set the orientation of your printout.

   If your application contains a similar setting, we recommend that you set the orientation using the application.
4. Click the **Multiple Page** drop-down list, and then select the **2 in 1**, **4 in 1**, **9 in 1**, **16 in 1**, or **25 in 1** option.
5. Click the **Page Order** drop-down list, and then select your page order.
6. Click the **Border Line** drop-down list, and then select your border line type.
7. Change other printer settings if needed.
8. Click **OK**.
9. Complete your print operation.

Related Information

- Print from Your Computer (Windows)
- Print Settings (Windows)

Print as a Poster (Windows)

Enlarge your print size and print the document in poster mode.

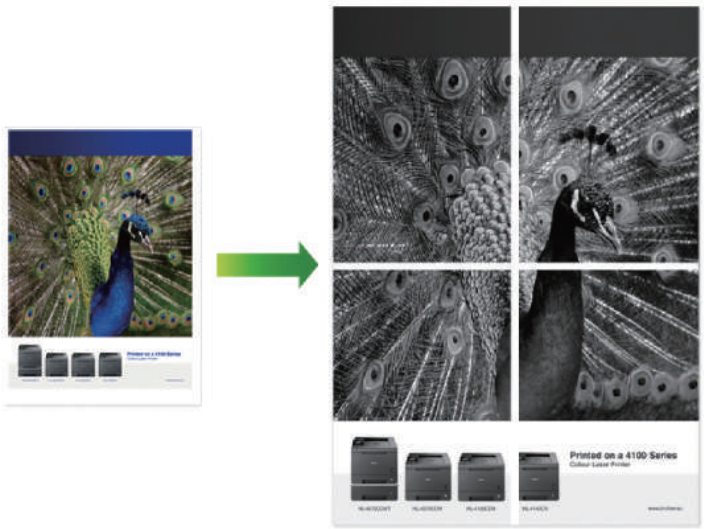

1. Select the print command in your application.
2. Select **Brother XXX-XXXX** (where XXXX is the name of your model), and then click the printing properties or preferences button.

   The printer driver window appears.
3. Click the **Multiple Page** drop-down list, and then select the **1 in 2x2 Pages**, **1 in 3x3 Pages**, **1 in 4x4 Pages**, or **1 in 5x5 Pages** option.
4. Select the **Print cut-out line** check box, if needed.

   Print cut-out line

   Prints a faint cut-out line around the printable area so that you can easily cut it out.
5. Change other printer settings if needed.
6. Click **OK**.
7. Complete your print operation.

Related Information

- Print from Your Computer (Windows)
- Print Settings (Windows)

Print on Both Sides of the Paper (Windows)

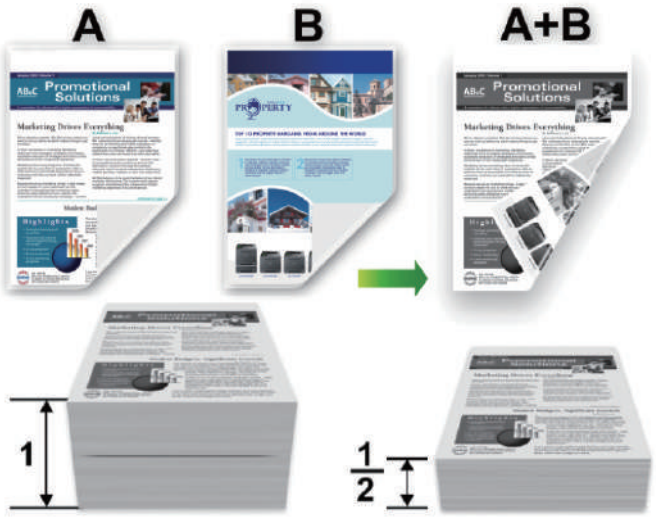

- (For models without the lever on the 2-sided tray) Select A4 sized paper when using the automatic 2-sided printing function.
- (For models with the lever on the 2-sided tray) Select A4, Letter, Legal, Mexico Legal, India Legal or Folio sized paper when using the automatic 2-sided printing function.
- Make sure the 2-sided tray is set to the paper size. If it is not, the paper may not be fed correctly, resulting in a skewed or a paper jam.
- Make sure the back cover is closed.
- If paper is curled, straighten it and put it back in the paper tray.
- Use regular paper or thin paper. DO NOT use bond paper.
- If the paper is too thin, it may wrinkle.
- When you use the manual 2-sided printing function, it is possible there may be paper jams or poor print quality.

1. Select the print command in your application.
2. Select **Brother XXX-XXXX** (where XXXX is the name of your model), and then click the printing properties or preferences button.

   The printer driver window appears.
3. In the **Orientation** field, select the **Portrait** or **Landscape** option to set the orientation of your printout.

   If your application contains a similar setting, we recommend that you set the orientation using the application.
4. Click the **2-sided / Booklet** drop-down list, and then select the **2-sided** or **2-sided (Manual)** option.

Option	Description
2-sided(Available only for certain models)	Automatically prints on both sides of the paper.
2-sided (Manual)	The machine prints all the even-numbered pages on one side of the paper first. Then, the printer driver instructs you (with a pop-up message) to reinsert the paper.

5. Click the **2-sided Settings** button.
6. Select one of the options from the **2-sided Type** menu.

When 2-sided is selected, four types of 2-sided binding are available for each orientation:

Option for Portrait	Description
Long Edge (Left)	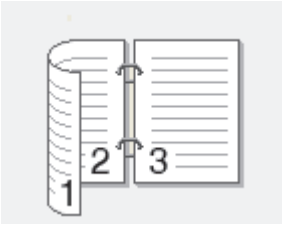
Long Edge (Right)	
Short Edge (Top)	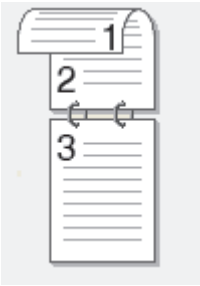
Short Edge (Bottom)	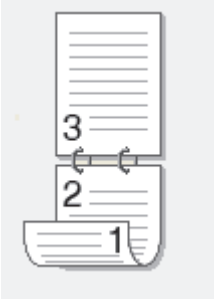

Option for Landscape	Description
Long Edge (Top)	
Long Edge (Bottom)	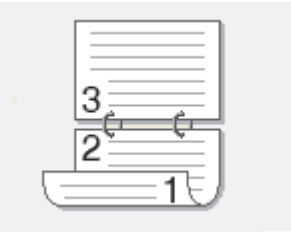

Option for Landscape	Description
Short Edge (Right)	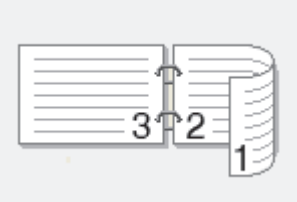
Short Edge (Left)	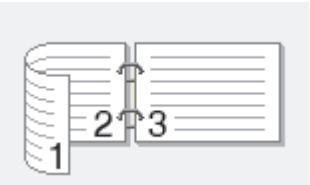

7. Select the **Binding Offset** check box if you want to specify the offset for binding in inches or millimetres.
8. Click **OK**.
9. Change other printer settings if needed.
10. Do one of the following:
    - For automatic 2-sided printing, click **OK** again, and then complete your print operation.
    - For manual 2-sided printing, click **OK** again and follow the on-screen instructions.

If the paper is not feeding correctly, it may be curled. Remove the paper, straighten it, and put it back in the paper tray.

Related Information

- Print from Your Computer (Windows)
- Print Settings (Windows)

Print as a Booklet (Windows)

Use this option to print a document in booklet format using 2-sided printing. The document's pages will be arranged according to the correct page number and will allow you to fold the print output at the centre, without having to change the order of the printed pages.

- (For models without the lever on the 2-sided tray) Select A4 sized paper when using the automatic 2-sided printing function.
- (For models with the lever on the 2-sided tray) Select A4, Letter, Legal, Mexico Legal, India Legal or Folio sized paper when using the automatic 2-sided printing function.
- Make sure the 2-sided tray is set to the paper size. If it is not, the paper may not be fed correctly, resulting in a skewed or a paper jam.
- Make sure the back cover is closed.
- If paper is curled, straighten it and put it back in the paper tray.
- Use regular paper or thin paper. DO NOT use bond paper.
- If the paper is too thin, it may wrinkle.
- When you use the manual 2-sided printing function, it is possible there may be paper jams or poor print quality.

1. Select the print command in your application.
2. Select **Brother XXX-XXXX** (where XXXX is the name of your model), and then click the printing properties or preferences button.

   The printer driver window appears.
3. In the **Orientation** field, select the **Portrait** or **Landscape** option to set the orientation of your printout.

   If your application contains a similar setting, we recommend that you set the orientation using the application.
4. Click the **2-sided / Booklet** drop-down list, and then select the **Booklet** or **Booklet (Manual)** option.

Option	Description
Booklet (Available only for certain models)	Automatically prints as a booklet.
Booklet (Manual)	Manually prints as a booklet.

5. Click the **2-sided Settings** button.
6. Select one of the options from the **2-sided Type** menu.

There are two types of 2-sided binding directions available for each orientation:

Option for Portrait	Description
Left Binding	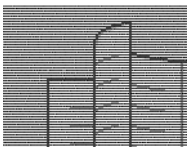
Right Binding	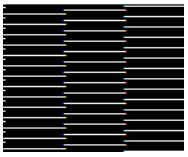

Option for Landscape	Description
Top Binding	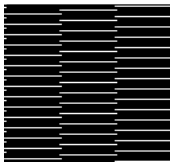
Bottom Binding	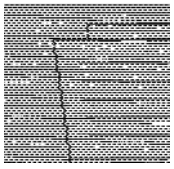

7. Select one of the options from the **Booklet Printing Method** menu.

Option	Description
All Pages at Once	Every page will be printed in booklet format (four pages to every piece of paper, two pages per side). Fold your printout in the centre to create the booklet.
Divide into Sets	This option prints the whole booklet in smaller individual booklet sets, allowing you to fold at the centre of the smaller individual booklet sets without having to change the order of the printed pages. You can specify the number of sheets in each smaller booklet set (from 1-15). This option can be helpful when folding a printed booklet that has a large number of pages.

8. Select the **Binding Offset** check box if you want to specify the offset for binding in inches or millimetres.
9. Click **OK**.
10. Change other printer settings if needed.
11. Do one of the following:
    - For automatic booklet printing, click **OK** again, and then complete your print operation.
    - For manual booklet printing, click **OK** again and follow the on-screen instructions.

Related Information

- Print from Your Computer (Windows)
- Print Settings (Windows)

Secure Print (Windows)

Use Secure Print to ensure that confidential or sensitive documents do not print until you enter a password on the machine's control panel.

- The secure data is deleted from the machine when you turn off the machine.

1. Select the print command in your application.
2. Select **Brother XXX-XXXX** (where XXXX is the name of your model), and then click the printing properties or preferences button.

   The printer driver window appears.
3. Click the **Advanced** tab.
4. Click the **Settings** button in the **Secure Print** field.
5. Select the **Secure Print** check box.
6. Type your four-digit password in the **Password** field, and then click **OK**.

   You must set a separate password for each document.
7. Click **OK**.
8. Complete your print operation.
9. On the machine's control panel, swipe left or right or press ◀ or ▶ to display the `[Secure Print]` option, and then press `[Secure Print]`.
10. Swipe up or down or press ▲ or ▼ to display user names, and then press your user name.

    The LCD displays the list of secured jobs for your name.
11. Swipe up or down or press ▲ or ▼ to display the print job, and then press it.
12. Enter your four-digit password, and then press `[OK]`.
13. Enter the number of copies you want.
14. Press `[Start]`.

    The machine prints the data.

After you print the secured data, it will be cleared from the machine's memory.

Related Information

- Print from Your Computer (Windows)

Use a Macro from Your Computer (Windows)

If you have stored the electronic forms (macros) in your machine's memory, you can use the macro to print the data as an overlay on the print job you want.

1. Select the print command in your application.
2. Select **Brother XXX-XXXX** (where XXXX is the name of your model), and then click the printing properties or preferences button.

   The printer driver window appears.
3. Click the **Advanced** tab.
4. Click the **Other Print Options** button.
5. Select **Macro**.
6. Click the **Macro Settings** button.
7. Enter **Macro ID** and **Macro Name** you want to use.
8. Select **Insert Macro Command**.
9. Select the page to overlay the macro data.

Option	Description
All Pages	Lets you insert the macro onto all pages.
Page	Lets you insert the macro onto a specific page. Select this option, and then enter a page number within the range 1 to 255.
Add to Top of Page	Send the macro data to the top of the page.
Add to End of Page	Send the macro data to the bottom of the page.

When **Booklet** has been selected, the **Page** setting in **Insert Macro Command** is disabled.

10. Click **OK**.
11. Click **OK** to return to the printer driver window.
12. Click **OK**.
13. Complete your print operation.

    The macro data is printed as an overlay.

Related Information

- Print from Your Computer (Windows)
- Print One Page Duplicates on Different Types of Paper

Use a Preset Print Profile (Windows)

Print Profiles are presets designed to give you quick access to frequently-used printing configurations.

1. Select the print command in your application.
2. Select **Brother XXX-XXXX** (where XXXX is the name of your model), and then click the printing properties or preferences button.

   The printer driver window appears.
3. Click the **Print Profiles** tab.

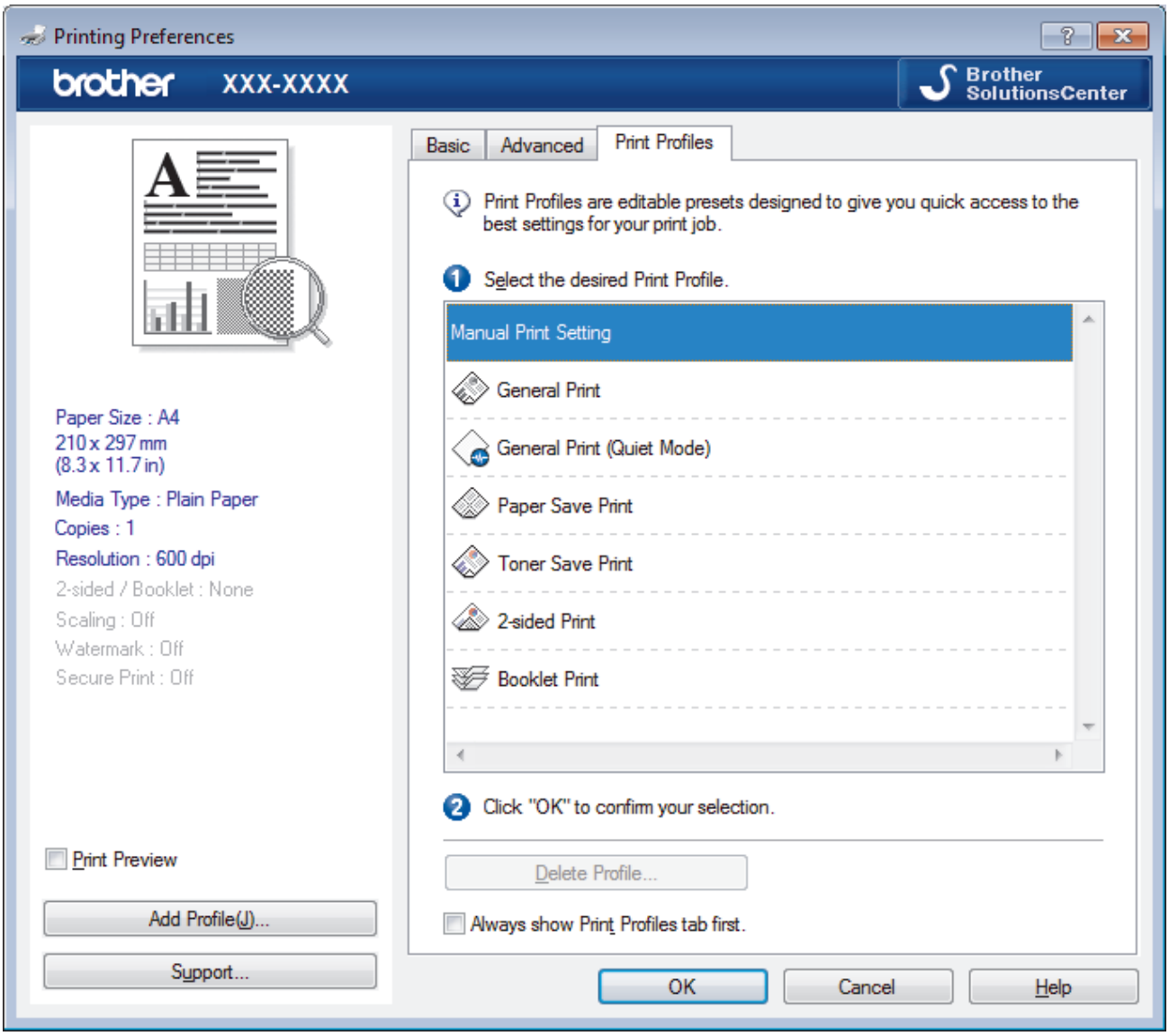

4. Select your profile from the print profile list.

   The profile settings are shown on the left side of the printer driver window.
5. Do one of the following:
   - If the settings are correct for your print job, click **OK**.
   - To change the settings, go back to the **Basic** or **Advanced** tab, change settings, and then click **OK**.

To display the **Print Profiles** tab at the front of the window the next time you print, select the **Always show Print Profiles tab first.** check box.

Related Information

- Print from Your Computer (Windows)

- Create or Delete Your Print Profile (Windows)
- Print Settings (Windows)

Create or Delete Your Print Profile (Windows)

Add up to 20 new print profiles with customised settings.

1. Select the print command in your application.
2. Select **Brother XXX-XXXX** (where XXXX is the name of your model), and then click the printing properties or preferences button.

   The printer driver window appears.
3. Click the **Basic** tab and the **Advanced** tab, and configure the print settings you want for the new Print Profile.
4. Click the **Print Profiles** tab.
5. Do one of the following:

   To create a new print profile:

   a. Click **Add Profile**.

      The **Add Profile** dialog box appears.

   b. Type the new profile name in the **Name** field.

   c. Click the icon you want to use to represent this profile from the icon list.

   d. Click **OK**.

      The new Print Profile name is added to the list in the **Print Profiles** tab.

   To delete a print profile that you created:

   a. Click **Delete Profile**.

      The **Delete Profile** dialog box appears.

   b. Select the profile you want to delete.

   c. Click **Delete**.

   d. Click **Yes**.

   e. Click **Close**.

Related Information

- Use a Preset Print Profile (Windows)

Change the Default Print Settings (Windows)

When you change print settings from within a program, the changes apply only to the items you are printing in that program, at that time. To select print settings to use for all of your Windows programs, all the time, use these steps to change the default print settings.

1. Do one of the following:
   - (For Windows XP and Windows Server 2003)

     Click **Start** > **Printers and Faxes**.
   - (For Windows Vista and Windows Server 2008)

     Click **(Start)** > **Control Panel** > **Hardware and Sound** > **Printers**.
   - (For Windows 7 and Windows Server 2008 R2)

     Click **(Start)** > **Devices and Printers**.
   - (For Windows 8)

     Move your mouse to the lower right corner of your desktop. When the menu bar appears, click **Settings**, and then click **Control Panel**. In the **Hardware and Sound** group, click **View devices and printers**.
   - (For Windows Server 2012)

     Move your mouse to the lower right corner of your desktop. When the menu bar appears, click **Settings**, and then click **Control Panel**. In the **Hardware** group, click **View devices and printers**.
   - (For Windows Server 2012 R2)

     Click **Control Panel** on the **Start** screen. In the **Hardware** group, click **View devices and printers**.
2. Right-click the **Brother XXX-XXXX** icon (where XXXX is your model name), and then select **Printer properties**. If printer driver options appear, select your printer driver.
3. Click the **General** tab, and then click the **Printing Preferences...** or **Preferences...** button.

   The printer driver dialog box appears.

   - To configure the tray settings, click the **Device Settings** tab.
   - To change the printer port, click the **Ports** tab.
4. Select the print settings you want to use as defaults for all of your Windows programs.
5. Click **OK**.
6. Close the printer properties dialog box.

Related Information

- Print from Your Computer (Windows)
- Configure the Optional Tray Settings (Windows)
- Print Settings (Windows)

Configure the Optional Tray Settings (Windows)

Access your machine's Properties to auto-detect your machine's Optional Tray and serial number.

The printer driver automatically detects the Optional Tray during the driver installation. If you added the Optional Tray after the driver installation, follow these steps.

1. Do one of the following:
   - (For Windows XP and Windows Server 2003)

     Click **Start** > **Printers and Faxes**.
   - (For Windows Vista and Windows Server 2008)

     Click **(Start)** > **Control Panel** > **Hardware and Sound** > **Printers**.
   - (For Windows 7 and Windows Server 2008 R2)

     Click **(Start)** > **Devices and Printers**.
   - (For Windows 8)

     Move your mouse to the lower right corner of your desktop. When the menu bar appears, click **Settings**, and then click **Control Panel**. In the **Hardware and Sound** group, click **View devices and printers**.
   - (For Windows Server 2012)

     Move your mouse to the lower right corner of your desktop. When the menu bar appears, click **Settings**, and then click **Control Panel**. In the **Hardware** group, click **View devices and printers**.
   - (For Windows Server 2012 R2)

     Click **Control Panel** on the **Start** screen. In the **Hardware** group, click **View devices and printers**.
2. Right-click the **Brother XXX-XXXX** icon (where XXXX is your model name), and then select **Printer properties**. If printer driver options appear, select your printer driver.
3. Select the **Device Settings** tab.
4. Click the **Auto Detect** button.

   The Optional Tray and the machine's serial number are automatically detected.
5. Click the **Apply** button.

The **Auto Detect** function is not available under the following machine conditions:

- The machine power switch is off.
- The machine is in an error state.
- The machine is in a network shared environment.
- The cable is not connected to the machine correctly.

Related Information

- Change the Default Print Settings (Windows)

Print a Document Using the BR-Script3 Printer Driver (PostScript® 3™ Language Emulation) (Windows)

The BR-Script3 printer driver lets you print PostScript® data more clearly.

To install the PS driver (BR-Script3 printer driver), launch Brother's installation CD-ROM, select **Custom** in Select Machine section, and then check **PS Driver** check box.

1. Select the print command in your application.
2. Select **Brother XXX-XXXX BR-Script3** (where XXXX is the name of your model), and then click the printing properties or preferences button.

   The printer driver window appears.

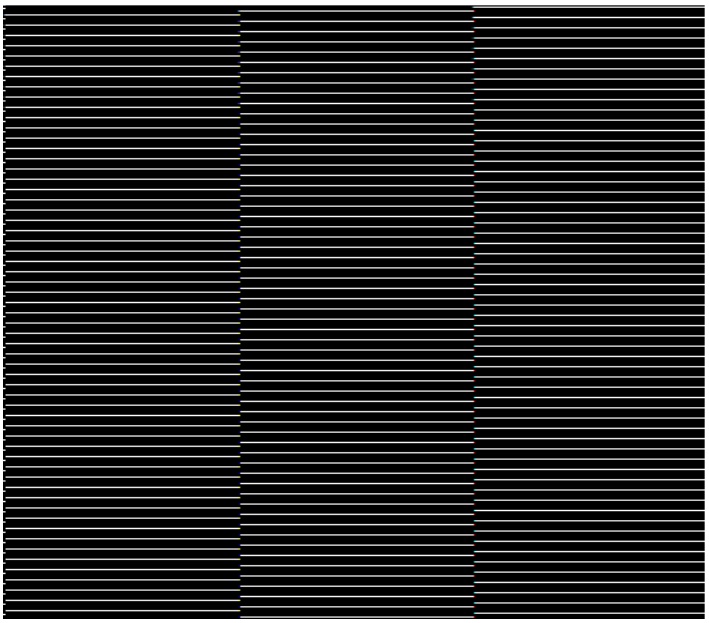

3. Click the **Layout**, **Paper/Quality**, or **Secure Print** tab to change basic print settings.

   Click the **Layout** or **Paper/Quality** tab, and then click the **Advanced...** button to change advanced print settings.
4. Click **OK**.
5. Complete your print operation.

Related Information

- Print from Your Computer (Windows)

Monitor the Status of the Machine from Your Computer (Windows)

The Status Monitor utility is a configurable software tool for monitoring the status of one or more devices, allowing you to get immediate notification of errors.

- To display the **Status Monitor** icon on your task tray, click the button. The (**Status Monitor**) icon will appear in the small window. Drag the icon to the task tray.

- Do one of the following:
  - Double-click the icon in the task tray.
  - (Windows XP, Windows Vista and Windows 7)
    Click **(Start)** > **All Programs** > **Brother** > **Brother Utilities**.

    Click the drop-down list and select your model name (if not already selected). Click **Tools** in the left navigation bar, and then click **Status Monitor**.
  - (Windows 8)
    Click (**Brother Utilities**), and then click the drop-down list and select your model name (if not already selected). Click **Tools** in the left navigation bar, and then click **Status Monitor**.
  - (Windows 8.1)

    Move your mouse to the lower left corner of the **Start** screen and click (if you are using a touch-based device, swipe up from bottom of the **Start** screen to bring up the **Apps** screen). When the **Apps** screen appears, tap or click (**Brother Utilities**), and then click the drop-down list and select your model name (if not already selected). Click **Tools** in the left navigation bar, and then click **Status Monitor**.

Troubleshooting

Click the **Troubleshooting** button to access the troubleshooting website.

Looking for replacement supplies?

Click the **Looking for replacement supplies?** button for more information on Brother genuine supplies.

When you enable Status Monitor, if you selected Automatic Firmware Update during installation, this feature will detect and download any updates for your machine.

Related Information

- Print from Your Computer (Windows)
- Printing Problems

Print Settings (Windows)

Basic Tab

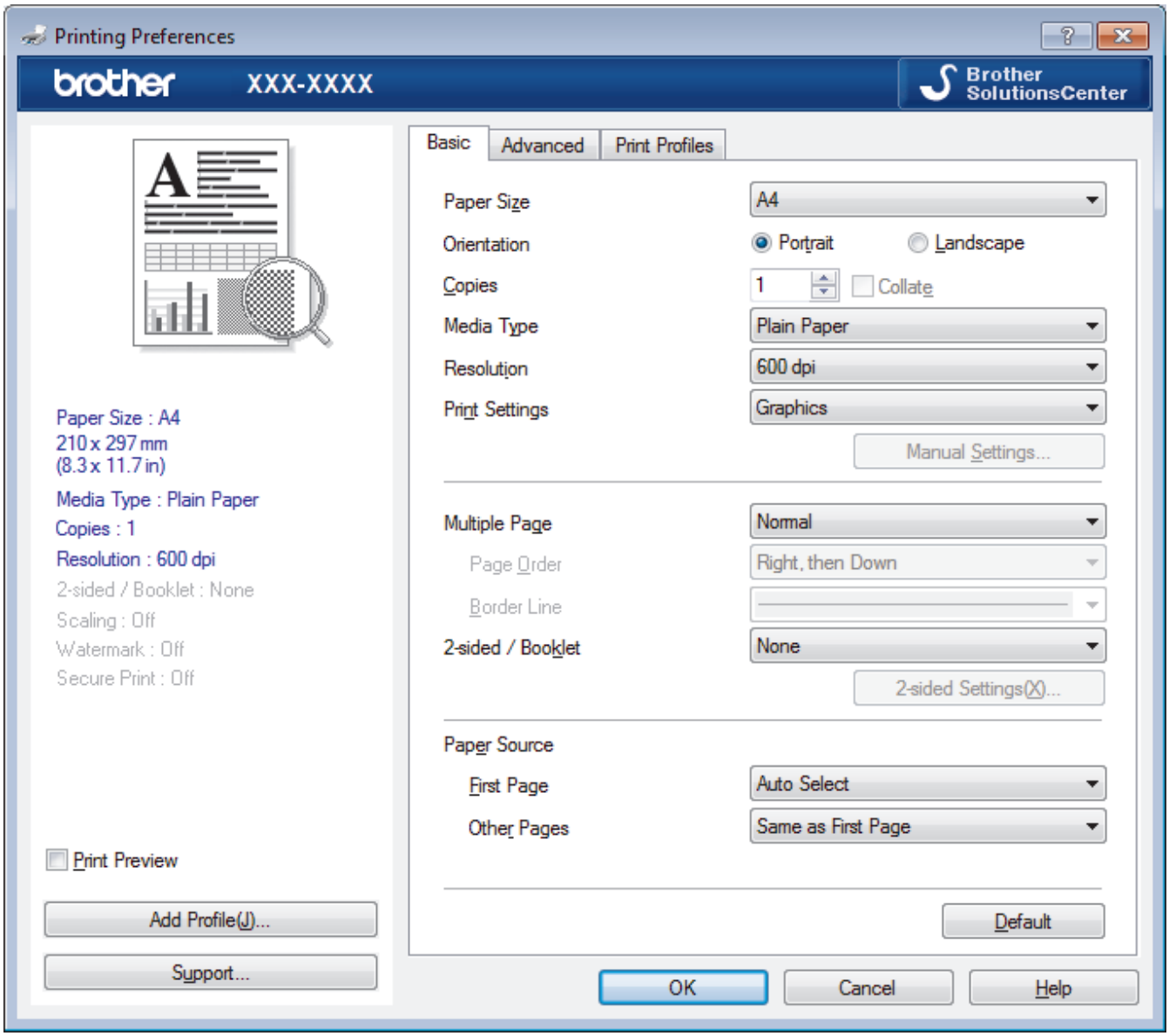

1. **Paper Size**

   Select the size of the paper you want to use. You can either choose from standard paper sizes or create a custom paper size.

2. **Orientation**

   Select the orientation (portrait or landscape) of your printout.

   If your application contains a similar setting, we recommend that you set the orientation using the application.

3. **Copies**

   Type the number of copies (1-999) that you want to print in this field.

   Collate

   Select this option to print sets of multi-page documents in the original page order. When this option is selected, one complete copy of your document will print, and then reprint according to the number of copies you choose. If this option is not selected, then each page will print according to the number of copies chosen before the next page of the document is printed.

4. **Media Type**

   Select the type of media you want to use. To achieve the best print results, the machine automatically adjusts its print settings according to the selected media type.

5. **Resolution**

   Select the print resolution. As print resolution and speed are related, the higher the resolution, the longer it will take to print the document.

6. **Print Settings**

   Select the type of document you want to print.

   Manual Settings...

   Specify advanced settings such as brightness, contrast, and other settings.

   Graphics

   Use Printer Halftone

   Select this option to use the printer driver to express halftones.

   Brightness

   Specify the brightness.

   Contrast

   Specify the contrast.

   Graphics Quality

   Select either Graphics or Text for the best print quality, based on the type of document you are printing.

   Improve Grey Printing

   Select this option to improve the image quality of shaded areas.

   Improve Pattern Printing

   Select this option to improve the pattern printing if printed fills and patterns are different from the fills and patterns you see on your computer screen.

   Improve Thin Line

   Select this option to improve the image quality of thin lines.

   Use System Halftone

   Select this option to use Windows to express halftones.

   TrueType Mode

   Mode

   Select how the fonts are processed for printing.

   Use Printer TrueType Fonts

   Select whether to use built-in fonts for the font processing.

7. **Multiple Page**

   Select this option to print multiple pages on a single sheet of paper or print one page of your document on multiple sheets.

   Page Order

   Select the page order when printing multiple pages on a single sheet of paper.

   Border Line

   Select the type of border to use when printing multiple pages on a single sheet of paper.

8. **2-sided / Booklet**

   Select this option to print on both sides of the paper or print a document in booklet format using 2-sided printing.

   2-sided Settings button

   Click this button to select the type of 2-sided binding. Four types of 2-sided bindings are available for each orientation.

9. **Paper Source**

Select the paper source setting according to your print conditions or purpose.

First Page

Select the paper source to use for printing the first page.

Other Pages

Select the paper source to use for printing the second and subsequent pages.

Advanced Tab

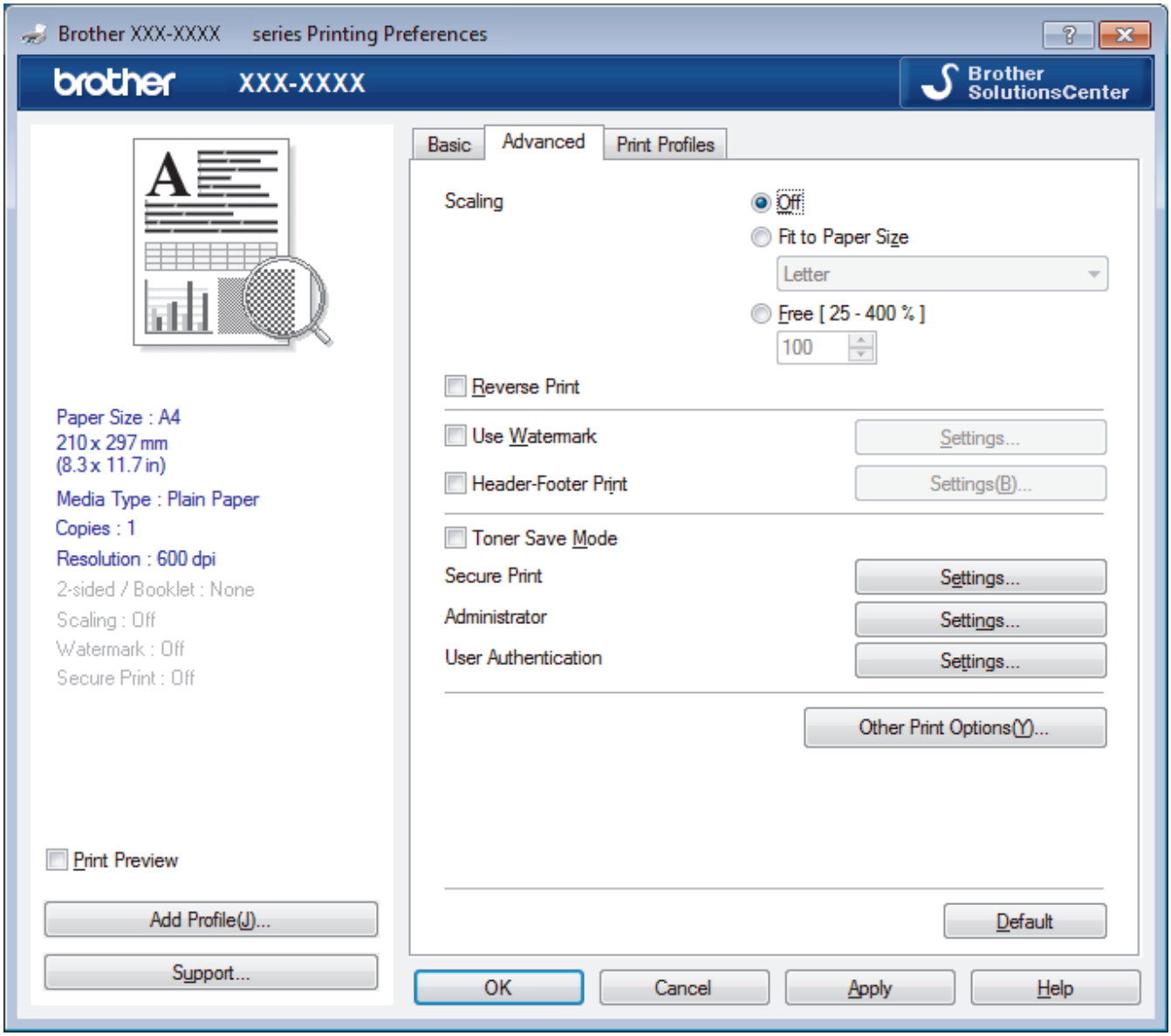

1. **Scaling**

Select these options to enlarge or reduce the size of the pages in your document.

Fit to Paper Size

Select this option to enlarge or reduce the document pages to fit a specified paper size. When you select this option, select the paper size you want from the drop-down list.

Free

Select this option to enlarge or reduce the document pages manually. When you select this option, type a value into the field.

2. **Reverse Print**

Select this option to rotate the printed image 180 degrees.

3. **Use Watermark**

   Select this option to print a logo or text on your document as a watermark. Select one of the preset watermarks, add a new watermark, or use an image file you have created.

4. **Header-Footer Print**

   Select this option to print the date, time and PC login user name on the document.

5. **Toner Save Mode**

   Select this feature to conserve toner by using less toner to print documents; printouts appear lighter, but are still legible.

6. **Secure Print**

   This feature ensures that confidential or sensitive documents do not print until you enter a password on the machine's control panel.

7. **Administrator**

   This feature allows you to change the administrator password and restrict various printing functions.

8. **User Authentication**

   This feature allows you to confirm the restrictions for each user.

9. **Other Print Options button**

   Macro

   Select this feature to print an electronic form (macro), which you have stored in your machine's memory, as an overlay on the print job.

   Density Adjustment

   Specify the print density.

   Improve Print Output

   Select this option to reduce the amount of paper curling and improve the toner fixing.

   Skip Blank Page

   Select this option to allow the printer driver to automatically detect blank pages and exclude them from printing.

   Print Text in Black

   Select this option when you want to print colour text in black.

   Print Archive

   Select this option to save the print data as a PDF file to your computer.

   Eco settings

   Select this option to reduce printing noise.

Related Information

- Print from Your Computer (Windows)
- Print a Document (Windows)
- Print More Than One Page on a Single Sheet of Paper (N in 1) (Windows)
- Print as a Poster (Windows)
- Print on Both Sides of the Paper (Windows)
- Print as a Booklet (Windows)
- Use a Preset Print Profile (Windows)
- Change the Default Print Settings (Windows)

Print from Your Computer (Mac)

- Print a Document (Mac)
- Print on Both Sides of the Paper (Mac)
- Print More Than One Page on a Single Sheet of Paper (N in 1) (Mac)
- Secure Print (Mac)
- Print a Document Using the BR-Script3 Printer Driver (PostScript® 3™ language emulation) (Mac)
- Monitor the Status of the Machine from Your Computer (Mac)
- Print Options (Mac)

Print a Document (Mac)

1. Make sure you have loaded the correct size paper in the paper tray.
2. From an application, such as Apple TextEdit, click the **File** menu, and then select **Print**.
3. Select **Brother XXX-XXXX** (where XXXX is your model name).
4. Type the number of copies you want in the **Copies** field.
5. Click the **Paper Size** pop-up menu, and then select your paper size.
6. Select the **Orientation** option that matches the way you want the document to print.
7. Click the application pop-up menu, and then select **Print Settings**.
   The **Print Settings** options appear.
8. Click the **Media Type** pop-up menu, and then select the type of paper you are using.
9. Change other printer settings, if needed.
10. Click **Print**.

Related Information

- Print from Your Computer (Mac)
- Print Options (Mac)

Print on Both Sides of the Paper (Mac)

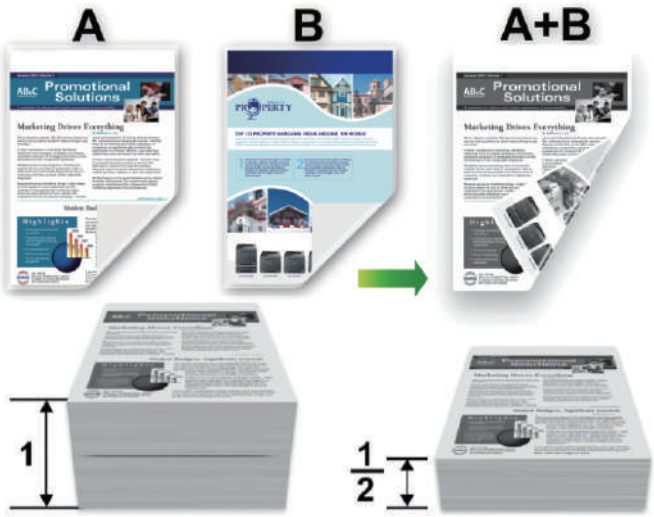

- (For models without the lever on the 2-sided tray) Select A4 sized paper when using the automatic 2-sided printing function.
- (For models with the lever on the 2-sided tray) Select A4, Letter, Legal, Mexico Legal, India Legal or Folio sized paper when using the automatic 2-sided printing function.
- Make sure the 2-sided tray is set to the paper size. If it is not, the paper may not be fed correctly, resulting in a skewed or a paper jam.
- Make sure the back cover is closed.
- If paper is curled, straighten it and put it back in the paper tray.
- Use regular paper or thin paper. DO NOT use bond paper.
- If the paper is too thin, it may wrinkle.
- When you use the manual 2-sided printing function, it is possible there may be paper jams or poor print quality.

1. From an application, such as Apple TextEdit, click the **File** menu, and then select **Print**.
2. Select **Brother XXX-XXXX** (where XXXX is your model name).
3. Select the **Orientation** option that matches the way you want the document to print.
4. For automatic 2-sided printing, do the following:
   a. Click the application pop-up menu, and then select **Layout**.
      The **Layout** setting options appear.
   b. In the **Two-Sided** section, select the **Short-Edge binding** or **Long-Edge binding** option.
   c. Change other printer settings, if needed.
   d. Click **Print**.
5. For manual 2-sided printing, do the following:
   a. Click the application pop-up menu, and then select **Paper Handling**.
      The **Paper Handling** options appear.
   b. In the **Pages to Print** pop-up menu, select **Even Only**.
   c. Change other print settings, if needed.
   d. Click the **Print** button.
   e. After the machine prints the even-numbered pages, remove the printed pages from the output paper tray.
   f. Make sure the pages are completely flat, and put the paper back in the tray, blank side facing down.
   g. Repeat steps 1-3, selecting the same printer and settings you used to print the even-numbered pages.

h. Click the application pop-up menu, and then select **Paper Handling**. The **Paper Handling** options appear.

i. In the **Pages to Print** pop-up menu, select **Odd Only**.

j. Click **Print**.

Related Information

- Print from Your Computer (Mac)
- Print Options (Mac)

Print More Than One Page on a Single Sheet of Paper (N in 1) (Mac)

1. From an application, such as Apple TextEdit, click the **File** menu, and then select **Print**.
2. Select **Brother XXX-XXXX** (where XXXX is your model name).
3. Click the application pop-up menu, and then select **Layout**.
   The **Layout** setting options appear.
4. Click the **Pages per Sheet** pop-up menu, and then select the number of pages to print on each sheet.
5. Select the **Layout Direction** option.
6. Click the **Border** pop-up menu, and then select your border line type.
7. Change other printer settings if needed.
8. Click **Print**.

Related Information

- Print from Your Computer (Mac)
- Print Options (Mac)

Secure Print (Mac)

Use Secure Print to ensure that confidential or sensitive documents do not print until you enter a password on the machine's control panel.

- The secure data is deleted from the machine when you turn off the machine.

1. From an application, such as Apple TextEdit, click the **File** menu, and then select **Print**.
2. Select **Brother XXX-XXXX** (where XXXX is your model name).
3. Click the application pop-up menu, and then select the **Secure Print** option. The **Secure Print** options appear.
4. Select the **Secure Print** check box.
5. Type your user name, job name and a four-digit password.
6. Click **Print**.
7. On the machine's control panel, swipe left or right or press ◀ or ▶ to display the `[Secure Print]` option, and then press `[Secure Print]`.
8. Swipe up or down or press ▲ or ▼ to display user names, and then press your user name.

   The LCD displays the list of secured jobs for your name.
9. Swipe up or down or press ▲ or ▼ to display the print job, and then press it.
10. Enter your four-digit password, and then press `[OK]`.
11. Enter the number of copies you want.
12. Press `[Start]`.

    The machine prints the data.

After you print the secured data, it will be cleared from the machine's memory.

Related Information

- Print from Your Computer (Mac)

Print a Document Using the BR-Script3 Printer Driver (PostScript® 3™ language emulation) (Mac)

The BR-Script3 printer driver lets you print PostScript® data more clearly.

- Go to your model's **Downloads** page on the Brother Solutions Center at support.brother.com to download the PS driver (BR-Script3 printer driver).
- Make sure you have added the BR-Script3 printer driver from **Print & Scan** or **Printers & Scanners** in the **System Preferences** list on your Mac.

1. Make sure you have loaded the correct size paper in the paper tray.
2. From an application, such as Apple TextEdit, click the **File** menu, and then select **Print**.
3. Select your machine.
4. Type the number of copies you want in the **Copies** field.
5. Click the **Paper Size** pop-up menu, and then select your paper size.
6. Select the **Orientation** option that matches the way you want the document to print.
7. Click the print options pop-up menu, and then click **Printer Features**.

   The **Printer Features** options appear.
8. Click the **Print Quality** pop-up menu, and then select the resolution.
9. Click the **Media Type** pop-up menu, and then select the type of paper you are using.
10. Change other printer settings, if needed.
11. Click **Print**.

Related Information

- Print from Your Computer (Mac)

Monitor the Status of the Machine from Your Computer (Mac)

The Status Monitor utility is a configurable software tool for monitoring the status of a device, allowing you to get immediate notification of error messages, such as paper empty or paper jam, at preset update intervals. You can also access Web Based Management.

1. Click the **System Preferences** menu, select **Print & Scan** or **Printers & Scanners**, and then select your machine.
2. Click the **Options & Supplies** button.
3. Click the **Utility** tab, and then click the **Open Printer Utility** button.

   Status Monitor starts.

Troubleshooting

Click the **Troubleshooting** button to access the troubleshooting website.

Visit the Genuine Supplies website

Click the **Visit the Genuine Supplies website** button for more information on Brother genuine supplies.

Updating the machine's status

To view the latest machine status while the **Status Monitor** window is open, click the icon. You can set the interval at which the software updates machine status information. Click **Brother Status Monitor** in the menu bar, and then select **Preferences**.

Web Based Management (Network Connection Only)

Access the Web Based Management System by clicking the machine icon on the **Status Monitor** screen. You can use a standard Web Browser to manage your machine using HTTP (Hyper Text Transfer Protocol).

Related Information

- Print from Your Computer (Mac)

- Printing Problems

Print Options (Mac)

Page Setup

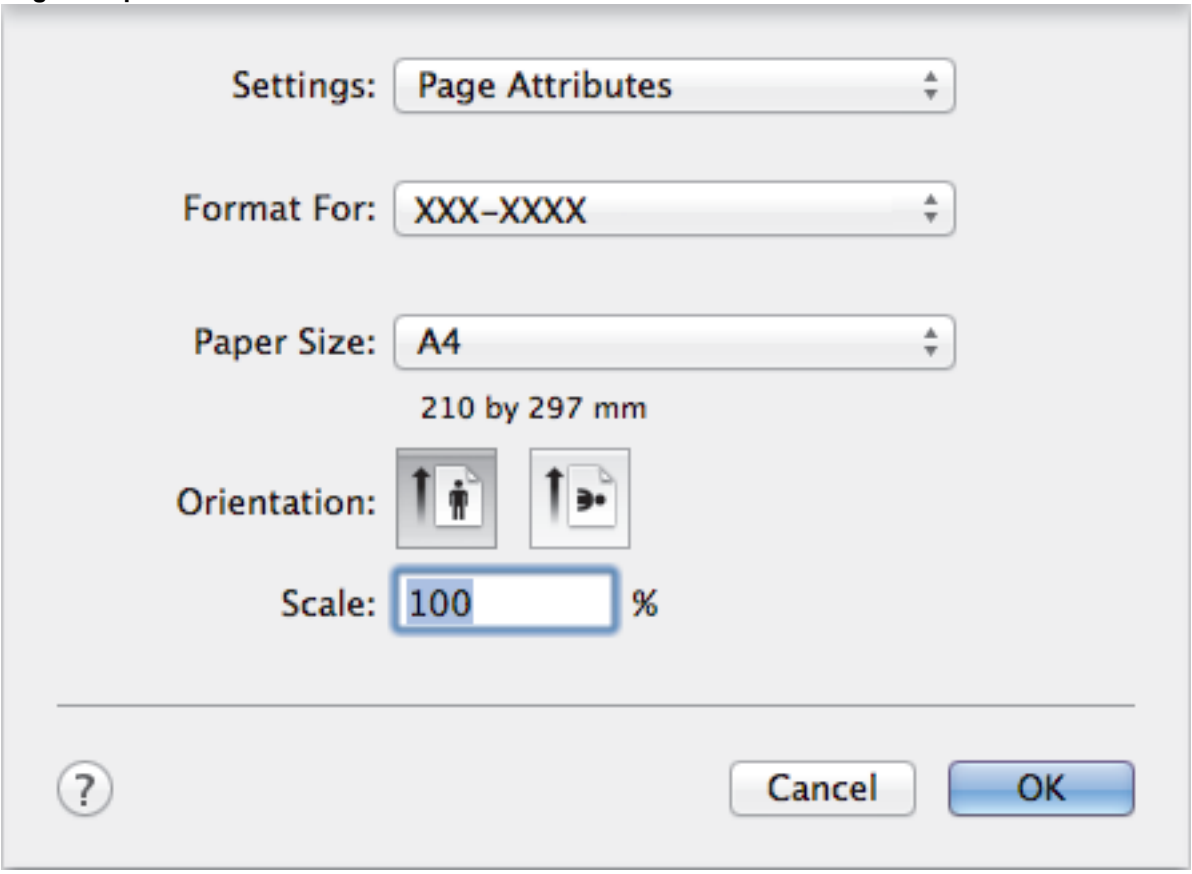

1. **Paper Size**

   Select the size of the paper you want to use. You can either choose from standard paper sizes or create a custom paper size.

2. **Orientation**

   Select the orientation (portrait or landscape) of your printout.

   If your application contains a similar setting, we recommend that you set the orientation using the application.

3. **Scale**

   Type a value into the field to enlarge or reduce the pages in your document to fit the selected paper size.

Layout

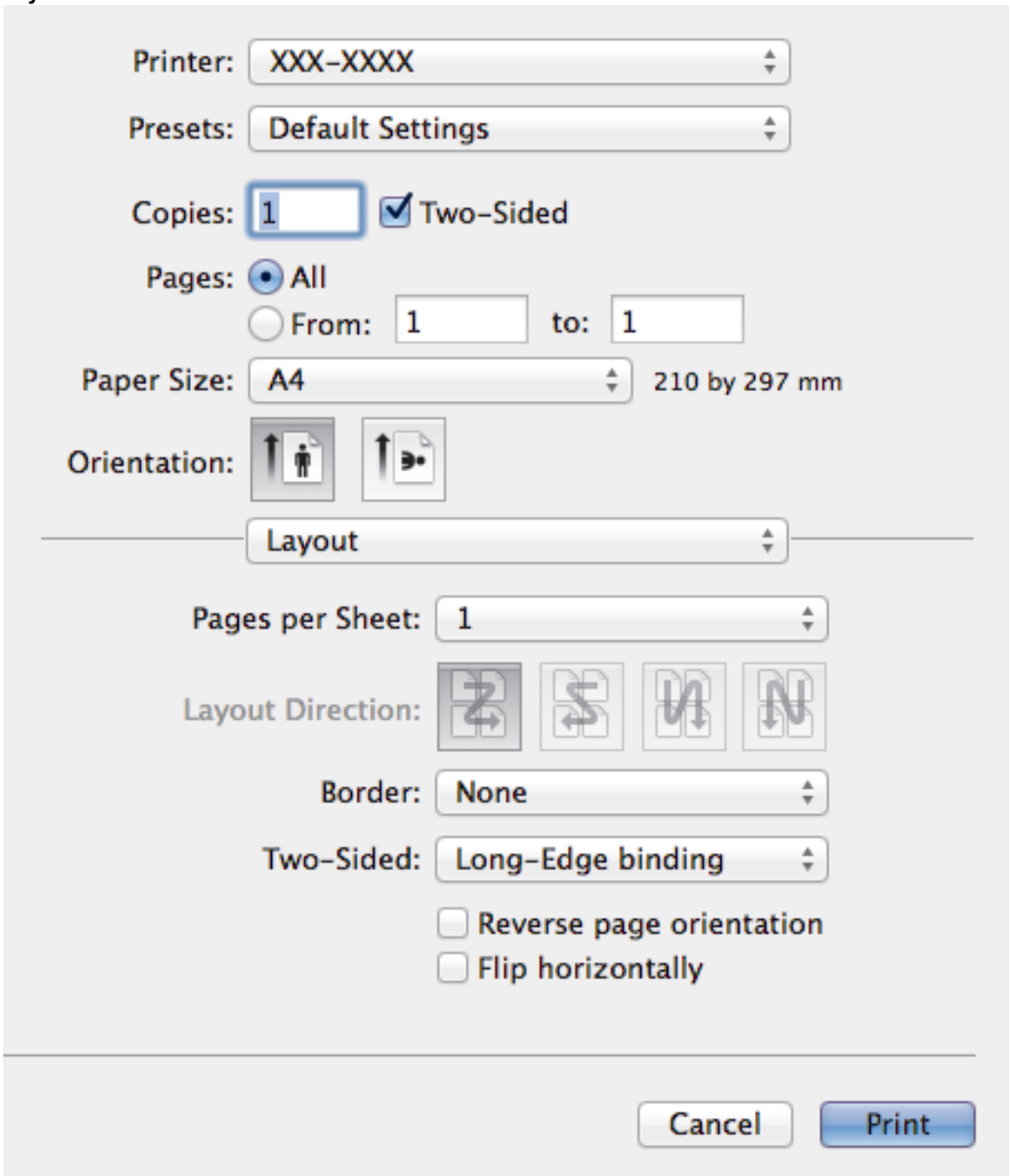

1. **Pages per Sheet**
   Select the number of pages to print on a single sheet of paper.
2. **Layout Direction**
   Select the page order when printing multiple pages on a single sheet of paper.
3. **Border**
   Select the type of border to use when printing multiple pages on a single sheet of paper.
4. **Two-Sided (Available only for certain models)**
   Select whether to print on both sides of the paper.
5. **Reverse page orientation**
   Select this option to rotate the printed image 180 degrees.
6. **Flip horizontally**
   Select this option to reverse the printed image on the page horizontally from left to right.

Paper Handling

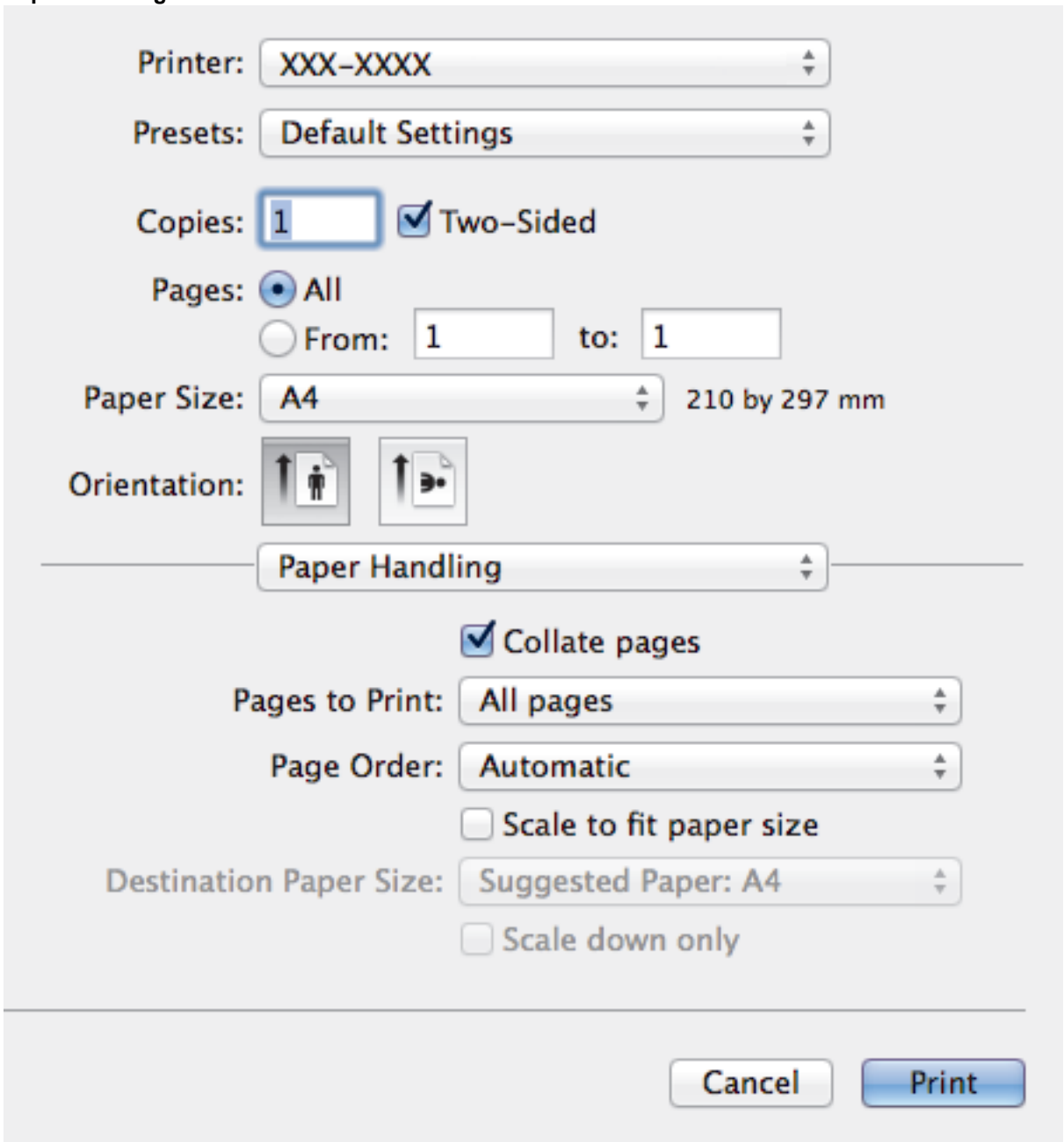

1. **Collate pages**

   Select this option to print sets of multi-page documents in the original page order. When this option is selected, one complete copy of your document will print, and then reprint according to the number of copies you choose. If this option is not selected, then each page will print according to the number of copies chosen before the next page of the document is printed.

2. **Pages to Print**

   Select which pages you want to print (even pages or odd pages).

3. **Page Order**

   Select the page order.

4. **Scale to fit paper size**

   Select this option to enlarge or reduce the pages in your document to fit the selected paper size.

5. **Destination Paper Size**

   Select the paper size to print on.

6. **Scale down only**

   Select this option if you want to reduce the pages in your document when they are too large for the selected paper size. If this option is selected and the document is formatted for a paper size that is smaller than the paper size you are using, the document will be printed at its original size.

Print Settings

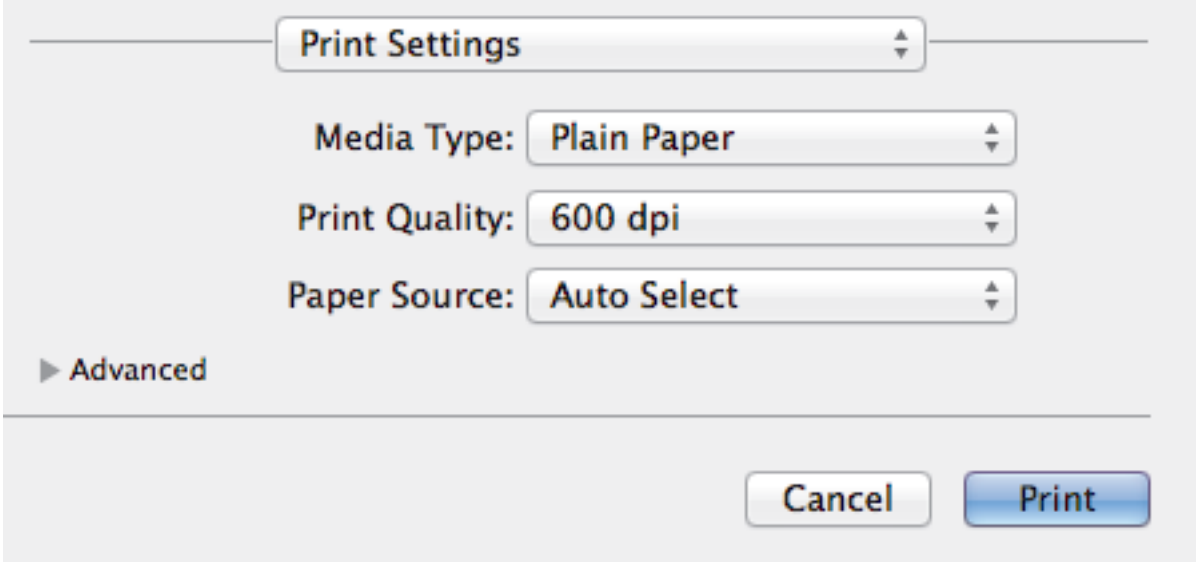

1. **Media Type**

   Select the type of media you want to use. To achieve the best print results, the machine automatically adjusts its print settings according to the selected media type.

2. **Print Quality**

   Select the print resolution you want. Because print quality and speed are related, the higher the quality, the longer it will take to print the document.

3. **Paper Source**

   Select the paper source setting according to your print conditions or purpose.

4. **Advanced**

   Toner Save Mode

   Select this feature to conserve toner by using less toner to print documents; printouts appear lighter, but are still legible.

   Graphics Quality

   Select either Graphics or Text for the best print quality, based on the type of document you are printing.

   Improve Print Output

   Select this option to reduce the amount of paper curling and improve the toner fixing.

   Density Adjustment

   Specify the print density.

   Quiet Mode

   Select this option to reduce printing noise.

   Other Print Options

   Skip Blank Page

   Select this option to allow the printer driver to automatically detect blank pages and exclude them from printing.

Secure Print

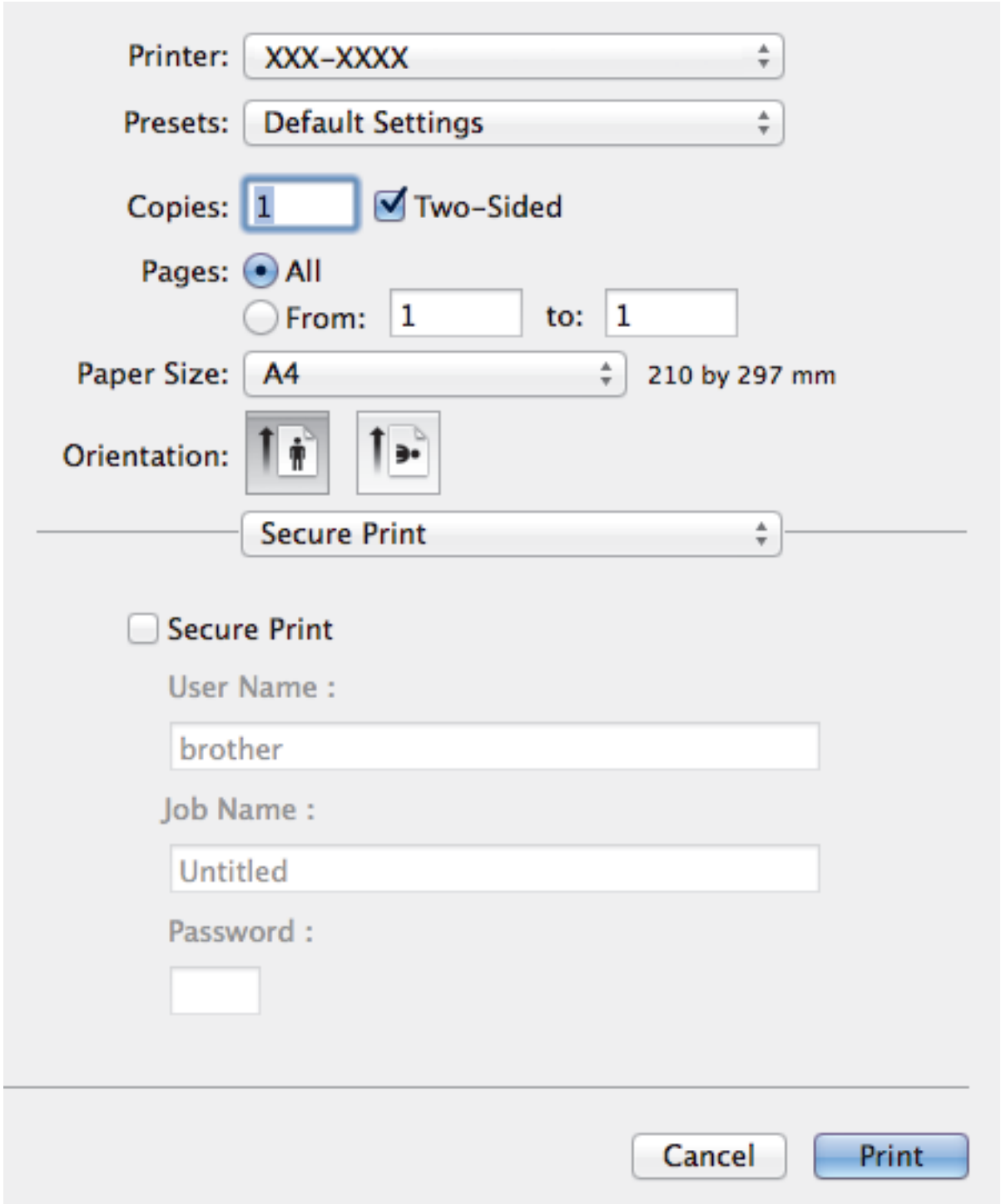

1. **Secure Print**

   This feature ensures that confidential or sensitive documents do not print until you enter a password on the machine's control panel.

Related Information

- Print from Your Computer (Mac)
- Print a Document (Mac)
- Print on Both Sides of the Paper (Mac)
- Print More Than One Page on a Single Sheet of Paper (N in 1) (Mac)

Print One Page Duplicates on Different Types of Paper

Use the Carbon Copy function to make multiple copies of the same print data, as if printing on carbon paper. Send the data to individual paper trays that you pre-loaded with different paper types or colours.

For example, you may want to set the machine to send your print data to Tray1, which you have pre-loaded with blue coloured paper, and then reprint the data in a certain location on the page from the MP Tray, which you have pre-loaded with yellow coloured paper that already contains text.

If you load blue paper in Tray 1 and yellow paper in the MP tray, the printer will automatically feed paper for Sheet 1 from Tray 1 and Sheet 2 from the MP Tray.

If you enable the Carbon Copy function, the machine will always make copies automatically.

(Windows)

The carbon copy function also allows you to select a different printing macro for each page.

1. Press [Settings] > [All Settings] > [Printer] > [Carbon Menu] > [Carbon Copy] > [On].
2. Swipe up or down or press ▲ or ▼ to display the [Copies] option, and then press the [Copies] option.
3. Enter the number of copies you want, and then press [OK].
4. Swipe up or down or press ▲ or ▼ to display the [Copy1 Tray] option, and then press the [Copy1 Tray] option.
5. Swipe up or down or press ▲ or ▼ to display the paper tray you want to configure the [Copy1 Tray] option, and then press the paper tray.

(Windows)

a. Swipe up or down or press ▲ or ▼ to display the [Copy1 Macro] option, and then press the [Copy1 Macro] option.
b. Swipe up or down or press ▲ or ▼ to display the ID number of macro you want to use, and then press it.

6. Repeat these steps until you have selected all the tray settings for each copy.
7. Send your print job to the machine.

Related Information

- Print
- Use a Macro from Your Computer (Windows)

Cancel a Print Job

1. Press .

To cancel multiple print jobs, press and hold for about four seconds.

Related Information

- Print
- Printing Problems

Test Print

If there are problems with print quality, follow these instructions to do a test print.

1. Press [Settings] > [All Settings] > [Printer] > [Print Options] > [Test Print] > [Yes].
2. Press .

Related Information

- Print
- Improve the Print Quality

Scan

- Scan Using the Scan Button on Your Brother Machine
- Scan from Your Computer (Windows)
- Scan from Your Computer (Mac)
- Configure Scan Settings Using Web Based Management

Scan Using the Scan Button on Your Brother Machine

- Scan Photos and Graphics
- Save Scanned Data to a Folder as a PDF File
- Save Scanned Data to a USB Flash Drive
- Scan to an Editable Text File (OCR)
- Scan to Email Attachment
- Send Scanned Data to an Email Server
- Scan to FTP
- Scan to SSH FTP (SFTP)
- Scan to Network (Windows)
- Scan to SharePoint
- Web Services for Scanning on Your Network (Windows Vista SP2 or greater, Windows 7 and Windows 8)
- Change Scan Button Settings from ControlCenter4 (Windows)
- Change Scan Button Settings from ControlCenter2 (Mac)
- Configure Certificate for Signed PDF
- Disable Scanning from Your Computer

Scan Photos and Graphics

Send scanned photos or graphics directly to your computer.

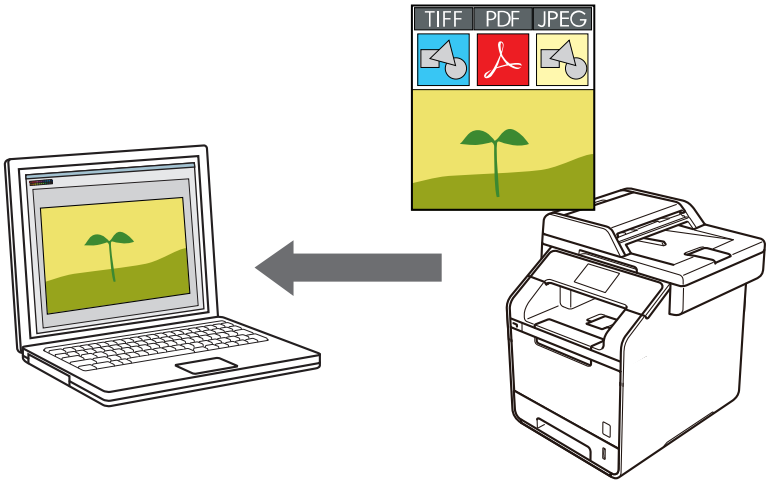

Use the Scan button on the machine to make temporary changes to the scan settings. To make permanent changes, use Brother's ControlCenter software.

1. Load your document.
2. Press [Scan].
3. Swipe left or right to display [to Image].
4. Press [to Image].

   The icon moves to the middle of the touchscreen and is highlighted in blue.
5. Press [to Image].
6. If the machine is connected over the network, swipe up or down or press ▲ or ▼ to display the computer where you want to send data, and then press the computer name.

If the LCD prompts you to enter a PIN for the computer, enter the four-digit PIN on the LCD, and then press [OK].

7. Do one of the following:
   - To change the scan settings, press [Options], and then go to the next step.
   - To use the default scan settings, press [Start].

     The machine starts scanning. If you are using the machine's scanner glass, follow the touchscreen instructions to complete the scanning job.

To change scan settings, a computer with Brother's Control Center software installed must be connected to the machine.

8. To scan both sides of the document (MFC-L5755DW/MFC-L5900DW/MFC-L6700DW/MFC-L6900DW):
   - Press [2-sided Scan], and then select the document type.

Option	Description
2-sided Scan: Long Edge	
2-sided Scan: Short Edge	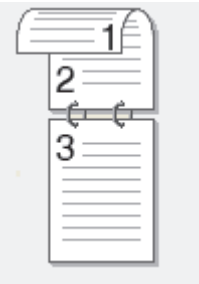

9. Select the scan settings you want to change:
   - [Scan Settings]
   - [Scan Type]
   - [Resolution]
   - [File Type]
   - [Document Size]
   - [Brightness]
   - [Contrast]
   - [ADF Auto Deskew]
   - [Skip Blank Page]
   - [Remove Background Colour]

     (available only for the [Colour] and [Grey] options)

To save the settings as a shortcut, press [Save as Shortcut].

10. Press [OK].
11. Press [Start].

    The machine starts scanning. If you are using the machine's scanner glass, follow the touchscreen instructions to complete the scanning job.

Related Information

- Scan Using the Scan Button on Your Brother Machine
- Change Scan Button Settings from ControlCenter4 (Windows)
- Change Scan Button Settings from ControlCenter2 (Mac)

Save Scanned Data to a Folder as a PDF File

Scan documents and save them to a folder on your computer as PDF files.

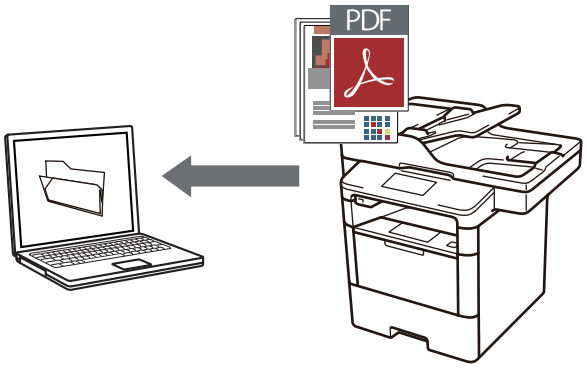

Use the Scan button on the machine to make temporary changes to the scan settings. To make permanent changes, use Brother's ControlCenter software.

1. Load your document.
2. Press [Scan].
3. Swipe left or right to display [to File].
4. Press [to File].

   The icon moves to the middle of the touchscreen and is highlighted in blue.
5. Press [to File].
6. If the machine is connected over the network, swipe up or down or press ▲ or ▼ to display the computer where you want to send data, and then press the computer name.

If the LCD prompts you to enter a PIN for the computer, enter the four-digit PIN on the LCD, and then press [OK].

7. Do one of the following:
   - To change the scan settings, press [Options], and then go to the next step.
   - To use the default scan settings, press [Start].

     The machine starts scanning. If you are using the machine's scanner glass, follow the touchscreen instructions to complete the scanning job.

To change scan settings, a computer with Brother's Control Center software installed must be connected to the machine.

8. To scan both sides of the document (MFC-L5755DW/MFC-L5900DW/MFC-L6700DW/MFC-L6900DW):
   - Press [2-sided Scan], and then select the document type.

Option	Description
2-sided Scan: Long Edge	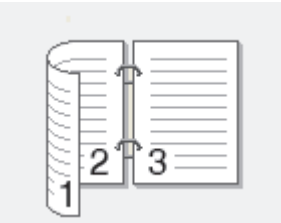

Option	Description
2-sided Scan: Short Edge	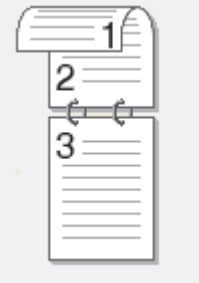

9. Select the scan settings you want to change:
   - [Scan Settings]
   - [Scan Type]
   - [Resolution]
   - [File Type]
   - [Document Size]
   - [Brightness]
   - [Contrast]
   - [ADF Auto Deskew]
   - [Skip Blank Page]
   - [Remove Background Colour]

     (available only for the [Colour] and [Grey] options)

To save the settings as a shortcut, press [Save as Shortcut].

10. Press [OK].
11. Press [Start].

    The machine starts scanning. If you are using the machine's scanner glass, follow the touchscreen instructions to complete the scanning job.

Related Information

- Scan Using the Scan Button on Your Brother Machine
- Change Scan Button Settings from ControlCenter4 (Windows)
- Change Scan Button Settings from ControlCenter2 (Mac)

Save Scanned Data to a USB Flash Drive

Scan documents directly to a USB flash drive.

1. Load your document.
2. Insert a USB flash drive into your machine.
   The LCD automatically changes.
3. Press [Scan to USB].
4. Do one of the following:
   - To change the settings, press [Options], and then select the button you want to change. Follow the machine's instructions.

   - To set your own default settings: after making changes to settings, press the [Set New Default] option, and then press [Yes].
   - To restore the factory settings: press [Factory Reset], and then press [Yes].

   - Press [Start] to start scanning without changing additional settings.
5. To scan both sides of the document (MFC-L5755DW/MFC-L5900DW/MFC-L6700DW/MFC-L6900DW):
   - Press [2-sided Scan], and then select the document type.

Option	Description
2-sided Scan: Long Edge	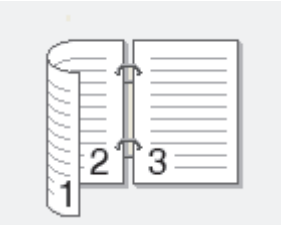
2-sided Scan: Short Edge	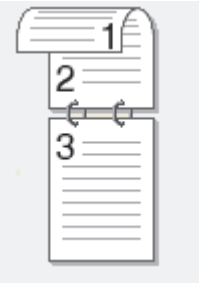

6. Select the scan settings you want to change:
   - [Scan Type]
   - [Resolution]
   - [File Type]
   - [Document Size]
   - [File Name]
   - [File Name Style]
   - [File Size]
   - [Brightness]
   - [Contrast]
   - [ADF Auto Deskew]
   - [Skip Blank Page]

- [Remove Background Colour]

  (available only for the [Colour] and [Grey] options)

To save the settings as a shortcut, press [Save as Shortcut].

7. Press [OK].
8. Press [Start].

   The machine starts scanning. If you are using the machine's scanner glass, follow the touchscreen instructions to complete the scanning job.

IMPORTANT

The LCD displays a message while reading the data. DO NOT unplug the power cord or remove the USB flash drive from the machine while it is reading the data. You could lose your data or damage the USB flash drive.

Related Information

- Scan Using the Scan Button on Your Brother Machine

Scan to an Editable Text File (OCR)

Your machine can convert characters in a scanned document to text using optical character recognition (OCR) technology. You can edit this text using your preferred text-editing application.

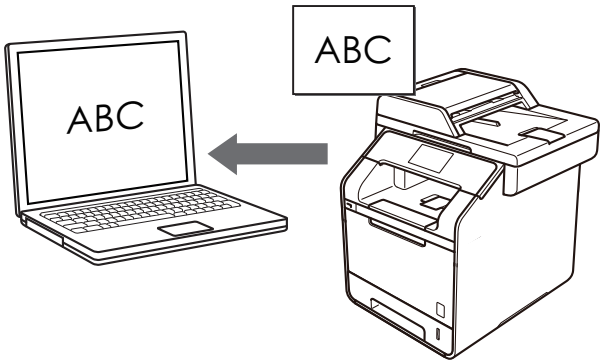

- The Scan to OCR feature is available for certain languages.
- Use the Scan button on the machine to make temporary changes to the scan settings. To make permanent changes, use Brother's ControlCenter software.

1. Load your document.
2. Press [Scan].
3. Swipe left or right to display [to OCR].
4. Press [to OCR].

   The icon moves to the middle of the touchscreen and is highlighted in blue.
5. Press [to OCR].
6. If the machine is connected over the network, swipe up or down or press ▲ or ▼ to display the computer where you want to send data, and then press the computer name.

   If the LCD prompts you to enter a PIN for the computer, enter the four-digit PIN on the LCD, and then press [OK].
7. Do one of the following:
   - To change the scan settings, press [Options], and then go to the next step.
   - To use the default scan settings, press [Start].

     The machine starts scanning. If you are using the machine's scanner glass, follow the touchscreen instructions to complete the scanning job.

   To change scan settings, a computer with Brother's Control Center software installed must be connected to the machine.
8. To scan both sides of the document (MFC-L5755DW/MFC-L5900DW/MFC-L6700DW/MFC-L6900DW):
   - Press [2-sided Scan], and then select the document type.

Option	Description
2-sided Scan: Long Edge	
2-sided Scan: Short Edge	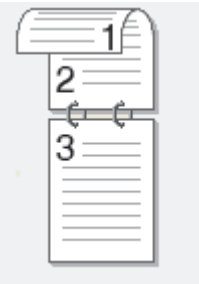

9. Select the scan settings you want to change:
   - [Scan Settings]
   - [Scan Type]
   - [Resolution]
   - [File Type]
   - [Document Size]
   - [Brightness]
   - [Contrast]
   - [ADF Auto Deskew]
   - [Skip Blank Page]
   - [Remove Background Colour]

     (available only for the [Colour] and [Grey] options)

To save the settings as a shortcut, press [Save as Shortcut].

10. Press [OK].
11. Press [Start].

    The machine starts scanning. If you are using the machine's scanner glass, follow the touchscreen instructions to complete the scanning job.

Related Information

- Scan Using the Scan Button on Your Brother Machine
- Change Scan Button Settings from ControlCenter4 (Windows)
- Change Scan Button Settings from ControlCenter2 (Mac)

Scan to Email Attachment

Send a scanned document as an email attachment.

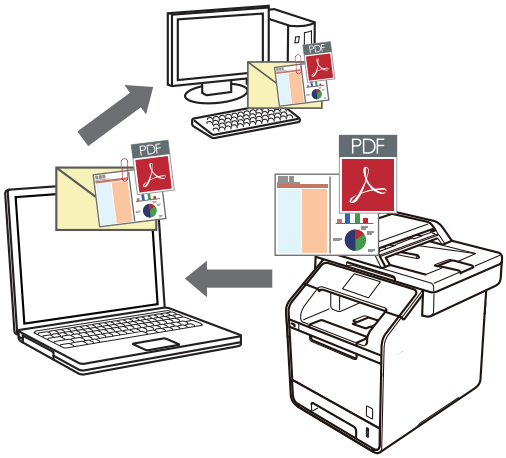

- Use the Scan button on the machine to make temporary changes to the scan settings. To make permanent changes, use Brother's ControlCenter software.
- The Scan to Email feature does not support Webmail services. Use the Scan to Image or Scan to File feature to scan a document or a picture, and then attach the scanned file to an email message.

The machine scans to your default email client.

1. Load your document.
2. Press [Scan].
3. Swipe left or right to display [to E-mail].
4. Press [to E-mail].

   The icon moves to the middle of the touchscreen and is highlighted in blue.
5. Press [to E-mail].
6. If the machine is connected over the network, swipe up or down or press ▲ or ▼ to display the computer where you want to send data, and then press the computer name.

   If the LCD prompts you to enter a PIN for the computer, enter the four-digit PIN on the LCD, and then press [OK].
7. Do one of the following:
   - To change the scan settings, press [Options], and then go to the next step.
   - To use the default scan settings, press [Start].

     The machine starts scanning. If you are using the machine's scanner glass, follow the touchscreen instructions to complete the scanning job.

   To change scan settings, a computer with Brother's Control Center software installed must be connected to the machine.
8. To scan both sides of the document (MFC-L5755DW/MFC-L5900DW/MFC-L6700DW/MFC-L6900DW):
   - Press [2-sided Scan], and then select the document type.

Option	Description
2-sided Scan: Long Edge	
2-sided Scan: Short Edge	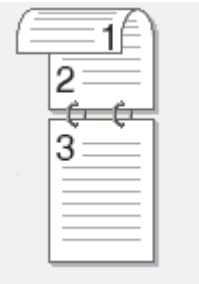

9. Select the scan settings you want to change:
   - [Scan Settings]
   - [Scan Type]
   - [Resolution]
   - [File Type]
   - [Document Size]
   - [Brightness]
   - [Contrast]
   - [ADF Auto Deskew]
   - [Skip Blank Page]
   - [Remove Background Colour]

     (available only for the [Colour] and [Grey] options)

To save the settings as a shortcut, press [Save as Shortcut].

10. Press [OK].
11. Press [Start].

    The machine starts scanning. If you are using the machine's scanner glass, follow the touchscreen instructions to complete the scanning job.

Related Information

- Scan Using the Scan Button on Your Brother Machine
- Change Scan Button Settings from ControlCenter4 (Windows)
- Change Scan Button Settings from ControlCenter2 (Mac)

Send Scanned Data to an Email Server

Send scanned data from your Brother machine directly to your email server, for delivery to an email recipient without using a computer.

- (DCP-L5600DN/MFC-L5700DN/MFC-L5755DW)

  To use this function, go to your model's **Downloads** page on the Brother Solutions Center at support.brother.com to update your machine's firmware or the program in your machine.
- To send scanned data to an email server, you must configure your machine to communicate with your network and mail server. You can configure these items from the machine's control panel, Web Based Management, Remote Setup, or BRAdmin Professional.

1. Load your document.
2. Press [Scan].
3. Swipe left or right to display [to E-mail Server].
4. Press [to E-mail Server].

   The icon moves to the middle of the touchscreen and is highlighted in blue.
5. Press [to E-mail Server].
6. Do one of the following to enter the destination email address:
   - To enter the email address manually, press [Manual], and then enter the email address using the keyboard on the LCD. When finished, press [OK].
   - If the email address is stored in the machine's address book, press [Address Book], and then select the email address.

     Press [OK].
7. Confirm the email address, and then press [Next].
8. Do one of the following:
   - To change the settings, press [Options], and then select the button you want to change. Follow the machine's instructions.

     - To set your own default settings: after making changes to settings, press the [Set New Default] option, and then press [Yes].
     - To restore the factory settings: press [Factory Reset], and then press [Yes].
   - Press [Start] to start scanning without changing additional settings.
9. To scan both sides of the document (MFC-L5755DW/MFC-L5900DW/MFC-L6700DW/MFC-L6900DW):
   - Press [2-sided Scan], and then select the document type.

Option	Description
2-sided Scan: Long Edge	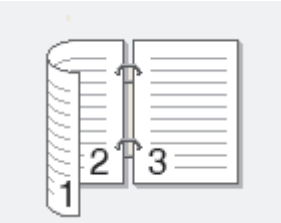

Option	Description
2-sided Scan: Short Edge	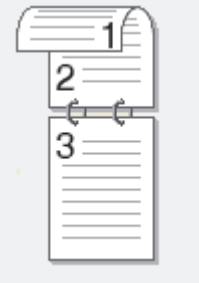

10. Select the scan settings you want to change:
    - [Scan Type]
    - [Resolution]
    - [File Type]
    - [Document Size]
    - [File Name]
    - [File Name Style]
    - [File Size]
    - [Brightness]
    - [Contrast]
    - [ADF Auto Deskew]
    - [Skip Blank Page]
    - [Remove Background Colour]

      (available only for the [Colour] and [Grey] options)

To save the settings as a shortcut, press [Save as Shortcut].

(This function may not be available depending on your machine conditions.)

11. Press [OK].
12. Press [Start].

    The machine starts scanning. If you are using the machine's scanner glass, follow the touchscreen instructions to complete the scanning job.

Related Information

- Scan Using the Scan Button on Your Brother Machine
- How to Enter Text on Your Brother Machine

Scan to FTP

Scan documents directly to an FTP server when you need to share the scanned information. For added convenience, configure different profiles to save your favourite Scan to FTP destinations.

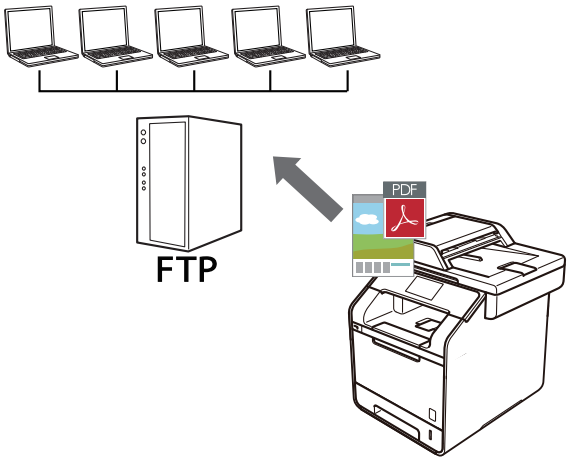

- Set up a Scan to FTP Profile
- Upload Scanned Data to an FTP Server

Set up a Scan to FTP Profile

Set up a Scan to FTP Profile to scan and upload the scanned data directly to an FTP location.

We recommend Microsoft Internet Explorer 8.0/10.0/11.0 for Windows and Safari 8.0 for Mac. Make sure that JavaScript and Cookies are always enabled in whichever browser you use. If a different web browser is used, make sure it is compatible with HTTP 1.0 and HTTP 1.1.

1. Start your web browser.

   Type "http://machine's IP address" in your browser's address bar (where "machine's IP address" is the IP address of the machine or the print server name). For example: http://192.168.1.2

   No password is required by default. If you have previously set a password, type it, and then press .
2. Click the **Scan** tab.
3. Click the **Scan to FTP/SFTP/Network/SharePoint** menu in the left navigation bar.
4. Select the **FTP** option, and then click **Submit**.

5. Click the **Scan to FTP/SFTP/Network/SharePoint Profile** menu in the left navigation bar.
6. Select the profile you want to set up or change.
7. In the **Profile Name** field, type a name for this server profile (up to 15 alphanumeric characters). The machine will display this name on the LCD.
8. In the **Host Address** field, type the Host Address (for example: ftp.example.com; up to 64 characters) or the IP address (for example: 192.23.56.189).
9. In the **Username** field, type a user name (up to 32 characters) that has permission to write data to the FTP server.
10. In the **Password** field, type the password (up to 32 characters) associated with the user name you entered in the **Username** field. Type the password again in the **Retype password** field.
11. In the **Store Directory** field, type the path to the folder on the FTP server where you want to send your scanned data. Do not type a slash mark at the beginning of the path (see example).

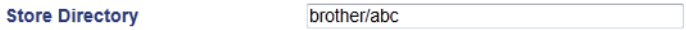

12. Click the **File Name** drop-down list, and then select a file name prefix from the preset names provided, or from user-defined names. The file name used for the scanned document will be the file name prefix you

select, followed by the last six digits of the flatbed/ADF scanner counter and the file extension (for example: "Estimate_098765.pdf").

13. Click the **Quality** drop-down list, and then select a quality setting. If you choose the **User Select** option, the machine will prompt users to select a setting each time they use the scan profile.
14. Click the **File Type** drop-down list, and then select the file type you want to use for the scanned document. If you choose the **User Select** option, the machine will prompt users to select a setting each time they use the scan profile.
15. Click the **Document Size** drop-down list, and then select your document size from the list. This is necessary to make sure the scanned file is the correct size.
16. Click the **File Size** drop-down list, and then select your file size from the list.
17. Click the **Remove Background Color** drop-down list, and then select the level from the list. You can use this feature to remove the background colour of documents to make the scanned data more legible.
18. Set the **Passive Mode** option to off or on depending on your FTP server and network firewall configuration. The default setting is on. In most cases this setting does not need to be changed.
19. Change the **Port Number** setting used to access the FTP server. The default for this setting is port 21. In most cases this setting does not need to be changed.
20. Click **Submit**.

Using the following characters: ?, /, \, ", :, <, >, | or * may cause a sending error.

Related Information

- Scan to FTP

Upload Scanned Data to an FTP Server

Share scanned information by saving it to your FTP server.

1. Load your document.
2. Press [Scan].
3. Swipe left or right to display [to FTP/SFTP].
4. Press [to FTP/SFTP].

   The icon moves to the middle of the touchscreen and is highlighted in blue.
5. Press [to FTP/SFTP].
6. The FTP and SFTP server profiles you have set up using Web Based Management are listed. Swipe up or down or press ▲ or ▼ to select one of the FTP server profiles listed, and then press the profile you want. If the profile is not complete (for example, if the logon account name and password are missing, or if the quality or file type is not specified), you will be prompted to enter any missing information.
7. Press [Start].

   The machine starts scanning. If you are using the machine's scanner glass, follow the touchscreen instructions to complete the scanning job.

Related Information

- Scan to FTP
- How to Enter Text on Your Brother Machine

Scan to SSH FTP (SFTP)

Scan documents directly to an SFTP server, a secure version of an FTP server. For added convenience, configure different profiles to save your favourite Scan to SFTP destinations.

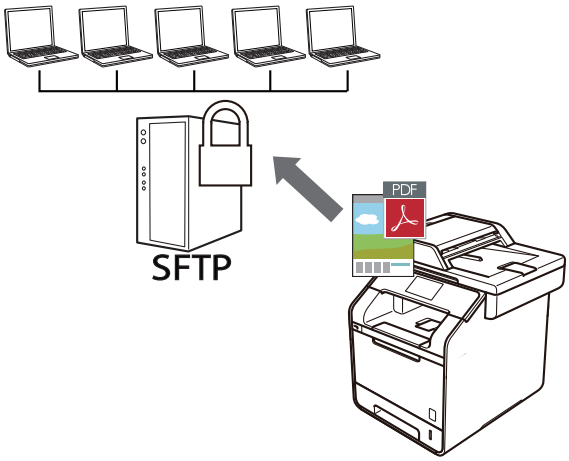

- Set up a Scan to SFTP Profile
- Create a Client Key Pair Using Web Based Management
- Export a Client Key Pair Using Web Based Management
- Import a Server Public Key Using Web Based Management
- Upload Scanned Data to an SFTP Server

Set up a Scan to SFTP Profile

Set up a Scan to SFTP Profile to scan and upload scanned data directly to an SFTP location.

We recommend Microsoft Internet Explorer 8.0/10.0/11.0 for Windows and Safari 8.0 for Mac. Make sure that JavaScript and Cookies are always enabled in whichever browser you use. If a different web browser is used, make sure it is compatible with HTTP 1.0 and HTTP 1.1.

1. Start your web browser.

   Type "http://machine's IP address" in your browser's address bar (where "machine's IP address" is the IP address of the machine or the print server name). For example: http://192.168.1.2

   No password is required by default. If you have previously set a password, type it, and then press .
2. Click the **Scan** tab.
3. Click the **Scan to FTP/SFTP/Network/SharePoint** menu in the left navigation bar.
4. Select the **SFTP** option, and then click **Submit**.

5. Click the **Scan to FTP/SFTP/Network/SharePoint Profile** menu in the left navigation bar.
6. Select the profile you want to set up or change.
7. In the **Profile Name** field, type a name for this server profile (up to 15 alphanumeric characters). The machine will display this name on the LCD.
8. In the **Host Address** field, type the Host Address (for example: sftp.example.com; up to 64 characters) or the IP address (for example: 192.23.56.189).
9. In the **Username** field, type the user name (up to 32 characters) that has permission to write data to the SFTP server.
10. In the **Auth. Method** field, select **Password** or **Public Key**.
11. Do one of the following:
    - When you select **Password**, type the password (up to 32 characters) associated with the user name you typed in the **Username** field. Type the password again in the **Retype password** field.
    - When you select **Public Key**, select the authentication type from the **Client Key Pair** drop-down list.
12. Select the authentication type from the **Server Public Key** drop-down list.

13. In the **Store Directory** field, type the path to the folder on the SFTP server where you want to send your scanned data. Do not type a slash mark at the beginning of the path (see example).

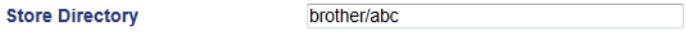

14. Click the **File Name** drop-down list, and then select a file name prefix from the preset names provided, or from user-defined names. The file name used for the scanned document will be the file name prefix you select, followed by the last six digits of the flatbed/ADF scanner counter and the file extension (for example: "Estimate_098765.pdf").
15. Click the **Quality** drop-down list, and then select a quality setting. If you choose the **User Select** option, the machine will prompt users to select a setting each time they use the scan profile.
16. Click the **File Type** drop-down list, and then select the file type you want to use for the scanned document. If you choose the **User Select** option, the machine will prompt users to select a setting each time they use the scan profile.
17. Click the **Document Size** drop-down list, and then select your document size from the list. This is necessary to make sure the scanned file is the correct size.
18. Click the **File Size** drop-down list, and then select your file size from the list.
19. Click the **Remove Background Color** drop-down list, and then select the level from the list. You can use this feature to remove the background colour of documents to make the scanned data more legible.
20. You can change the **Port Number** setting used to access the SFTP server. The default for this setting is port 22. In most cases this setting does not need to be changed.
21. Click **Submit**.

Using the following characters: ?, /, \, ", :, <, >, | or * may cause a sending error.

Related Information

- Scan to SSH FTP (SFTP)

Create a Client Key Pair Using Web Based Management

1. Start your web browser.
2. Type "http://machine's IP address" in your browser's address bar (where "machine's IP address" is the machine's IP address).

   For example:

   http://192.168.1.2

   - If you are using a Domain Name System or enable a NetBIOS name, you can type another name, such as "SharedPrinter" instead of the IP address.
     - For example:

       http://SharedPrinter

     If you enable a NetBIOS name, you can also use the node name.
     - For example:

       http://brnxxxxxxxxxxxx

     The NetBIOS name can be found in the Network Configuration Report.
   - For Mac, access Web Based Management by clicking the machine's icon on the **Status Monitor** screen.
3. No password is required by default. Type a password if you have set one, and then click .
4. Click the **Network** tab.
5. Click the **Security** tab.
6. Click **Client Key Pair** in the left navigation bar.
7. Click **Create New Client Key Pair**.
8. In the **Client Key Pair Name** field, type the name (up to 20 characters) you want.
9. Click the **Public Key Algorithm** drop-down list, and then select the algorithm you want.
10. Click **Submit**.

    The client key pair is created and saved in your machine's memory. The client key pair name and public key algorithm will be displayed in the **Client Key Pair List**.

Related Information

- Scan to SSH FTP (SFTP)

Export a Client Key Pair Using Web Based Management

1. Start your web browser.
2. Type "http://machine's IP address" in your browser's address bar (where "machine's IP address" is the machine's IP address).

   For example:

   http://192.168.1.2

- If you are using a Domain Name System or enable a NetBIOS name, you can type another name, such as "SharedPrinter" instead of the IP address.
  - For example:

    http://SharedPrinter

  If you enable a NetBIOS name, you can also use the node name.
  - For example:

    http://brnxxxxxxxxxxxx

  The NetBIOS name can be found in the Network Configuration Report.
- For Mac, access Web Based Management by clicking the machine's icon on the **Status Monitor** screen.

3. No password is required by default. Type a password if you have set one, and then click .
4. Click the **Network** tab.
5. Click the **Security** tab.
6. Click **Client Key Pair** in the left navigation bar.
7. Click **Export Public Key** shown with **Client Key Pair List**.
8. Click **Submit**.
9. Specify the location where you want to save the file.

The client key pair is exported to your computer.

Related Information

- Scan to SSH FTP (SFTP)

Import a Server Public Key Using Web Based Management

1. Start your web browser.
2. Type "http://machine's IP address" in your browser's address bar (where "machine's IP address" is the machine's IP address).

   For example:

   http://192.168.1.2

- If you are using a Domain Name System or enable a NetBIOS name, you can type another name, such as "SharedPrinter" instead of the IP address.
  - For example:

    http://SharedPrinter

  If you enable a NetBIOS name, you can also use the node name.
  - For example:

    http://brnxxxxxxxxxxxx

  The NetBIOS name can be found in the Network Configuration Report.
- For Mac, access Web Based Management by clicking the machine's icon on the **Status Monitor** screen.

3. No password is required by default. Type a password if you have set one, and then click .
4. Click the **Network** tab.
5. Click the **Security** tab.
6. Click **Server Public Key** in the left navigation bar.
7. Click **Import Server Public Key**.
8. Specify the file that you want to import.
9. Click **Submit**.

The server public key is imported to your machine.

Related Information

- Scan to SSH FTP (SFTP)

Upload Scanned Data to an SFTP Server

1. Load your document.
2. Press [Scan].
3. Swipe left or right to display [to FTP/SFTP].
4. Press [to FTP/SFTP].

   The icon moves to the middle of the touchscreen and is highlighted in blue.
5. Press [to FTP/SFTP].
6. The FTP and SFTP server profiles you have set up using Web Based Management are listed. Swipe up or down or press ▲ or ▼ to select one of the SFTP server profiles listed, and then press the profile you want. If the profile is not complete (for example, if the logon account name and password are missing, or if the quality or file type is not specified), you will be prompted to enter any missing information.
7. Press [Start].

   The machine starts scanning. If you are using the machine's scanner glass, follow the touchscreen instructions to complete the scanning job.

Related Information

- Scan to SSH FTP (SFTP)

Scan to Network (Windows)

Scan documents directly to a CIFS server on your local network. For added convenience, you can configure different profiles to save your favourite Scan to Network destinations.

- Set up a Scan to Network Profile
- Upload Scanned Data to a CIFS Server

Set up a Scan to Network Profile

Set up a Scan to Network Profile to scan and upload scanned data directly to a folder on a CIFS server.

We recommend Microsoft Internet Explorer 8.0/10.0/11.0 for Windows. Make sure that JavaScript and Cookies are always enabled in whichever browser you use. If a different web browser is used, make sure it is compatible with HTTP 1.0 and HTTP 1.1.

1. Start your web browser.

   Type "http://machine's IP address" in your browser's address bar (where "machine's IP address" is the IP address of the machine or the print server name). For example: http://192.168.1.2

   No password is required by default. If you have previously set a password, type it, and then press .

2. Click the **Scan** tab.
3. Click the **Scan to FTP/SFTP/Network/SharePoint** menu in the left navigation bar.
4. Select the **Network** option, and then click **Submit**.

5. Click the **Scan to FTP/SFTP/Network/SharePoint Profile** menu in the left navigation bar.
6. Select the profile you want to set up or change.
7. In the **Profile Name** field, type a name for this server profile (up to 15 alphanumeric characters). The machine will display this name on the LCD.
8. In the **Network Folder Path** field, type the path to the folder on the CIFS server where you want to send your scanned data.
9. Click the **File Name** drop-down list, and then select a file name prefix from the preset names provided, or from user-defined names. The file name used for the scanned document will be the file name prefix you select, followed by the last six digits of the flatbed/ADF scanner counter and the file extension (for example: "Estimate_098765.pdf").
10. Click the **Quality** drop-down list, and then select a quality setting. If you choose the **User Select** option, the machine will prompt users to select a setting each time they use the scan profile.
11. Click the **File Type** drop-down list, and then select the file type you want to use for the scanned document. If you choose the **User Select** option, the machine will prompt users to select a setting each time they use the scan profile.
12. Click the **Document Size** drop-down list, and then select your document size from the list. This is necessary to make sure the scanned file is the correct size.
13. Click the **File Size** drop-down list, and then select your file size from the list.
14. Click the **Remove Background Color** drop-down list, and then select the level from the list. You can use this feature to remove the background colour of documents to make the scanned data more legible.
15. To PIN-protect this profile, in the **Use PIN for Authentication** field, select **On**.
16. If you selected **On** for the **Use PIN for Authentication** field, type a four-digit PIN in the **PIN Code** field.
17. To set your authentication method, select **Auto**, **Kerberos**, or **NTLMv2** from the **Auth. Method** menu.
18. In the **Username** field, type a user name (up to 96 characters) that has permission to write data to the folder specified in the **Network Folder Path** field. If the user name is part of a domain, enter the user name in one of the following styles:

    user@domain

    domain\user

19. In the **Password** field, type the password (up to 32 characters) associated with the user name you entered in the **Username** field. Type the password again in the **Retype password** field.
20. To set the Kerberos Server Address manually, in the **Kerberos Server Address** field, type the Kerberos Server Address (for example: kerberos.example.com; up to 64 characters).
21. Click **Submit**.

Using the following characters: ?, /, \, ", :, <, >, | or * may cause a sending error.

22. You must configure the SNTP protocol (network time server) or you must set the date, time and time zone correctly on the control panel for all authentication methods. The time must match the time used by the Kerberos Server and CIFS Server.

Related Information

- Scan to Network (Windows)
- Set the Date and Time Using Web Based Management

Set the Date and Time Using Web Based Management

Make sure the date and time and the time zone settings are set correctly using Web Based Management or the control panel, so the machine's time matches the time being used by the server providing authentication.

Ignore step 1, if you already have a Web Based Management window open.

1. Start your web browser.

   Type "http://machine's IP address" in your browser's address bar (where "machine's IP address" is the IP address of the machine or the print server name). For example: http://192.168.1.2

   No password is required by default. If you have previously set a password, type it, and then press .

2. Click the **Administrator** tab.
3. Click the **Date&Time** menu in the left navigation bar.

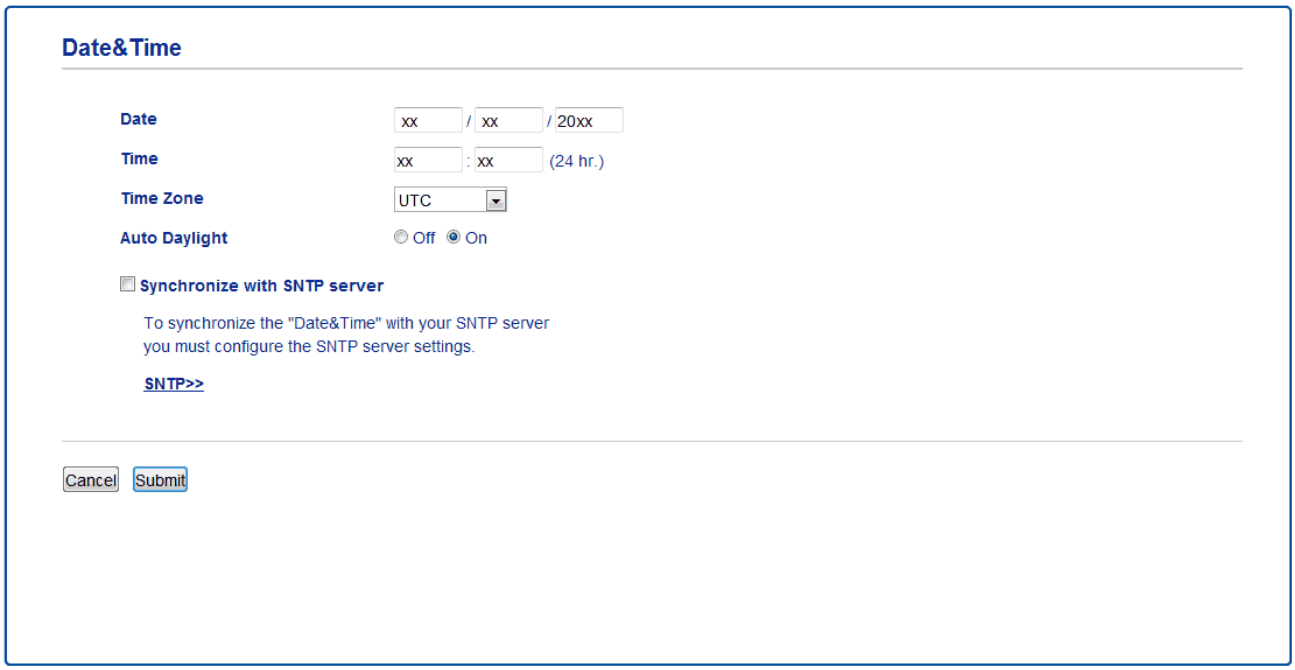

4. In the **Date** fields, enter the date.
5. Select the clock type from the **Clock Type** field (available only for some countries).
6. In the **Time** fields, enter the time.
7. Select the time difference between your location and UTC from the **Time Zone** drop-down list, for example, the time zone for Eastern time in the USA and Canada is UTC-05:00.
8. In the **Auto Daylight** field, click **On** to set the machine to change automatically for Daylight Saving Time. It will reset itself forward one hour in the spring, and back one hour in the autumn (available only for some countries).
9. Click **Submit**.

Related Information

- Set up a Scan to Network Profile

Upload Scanned Data to a CIFS Server

1. Load your document.
2. Press [Scan].
3. Swipe left or right to display [to Network].
4. Press [to Network].

   The icon moves to the middle of the touchscreen and is highlighted in blue.
5. Press [to Network].
6. Swipe up or down or press ▲ or ▼ to select one of the network server profiles listed, and then press the profile you want. If the profile is not complete (for example, if the logon account name and password are missing, or if the quality or file type is not specified), you will be prompted to enter any missing information.
7. Press [Start].

   The machine starts scanning. If you are using the machine's scanner glass, follow the touchscreen instructions to complete the scanning job.

Related Information

- Scan to Network (Windows)

Scan to SharePoint

Scan documents directly to a SharePoint server when you need to share the scanned information. For added convenience, configure different profiles to save your favourite Scan to SharePoint destinations.

- Set up a Scan to SharePoint Profile
- Upload Scanned Data to a SharePoint Server

Set up a Scan to SharePoint Profile

Set up a Scan to SharePoint Profile to scan and upload the scanned data directly to a SharePoint location.

We recommend Microsoft Internet Explorer 8.0/10.0/11.0 for Windows and Safari 8.0 for Mac. Make sure that JavaScript and Cookies are always enabled in whichever browser you use. If a different web browser is used, make sure it is compatible with HTTP 1.0 and HTTP 1.1.

1. Start your web browser.

   Type "http://machine's IP address" in your browser's address bar (where "machine's IP address" is the IP address of the machine or the print server name). For example: http://192.168.1.2

   No password is required by default. If you have previously set a password, type it, and then press .
2. Click the **Scan** tab.
3. Click the **Scan to FTP/SFTP/Network/SharePoint** menu in the left navigation bar.
4. Select the **SharePoint** option, and then click **Submit**.

5. Click the **Scan to FTP/SFTP/Network/SharePoint Profile** menu in the left navigation bar.
6. Select the profile you want to set up or change.
7. In the **Profile Name** field, type a name for this server profile (up to 15 alphanumeric characters). The machine will display this name on the LCD.
8. In the **SharePoint Site Address** field, Copy and Paste the full destination address shown in the address bar of your browser (for example: http://SharePointSiteAddress/Shared%20Documents/Forms/AllItems.aspx) or the IP address (for example: http://192.168.0.1/Shared%20Documents/Forms/AllItems.aspx).
9. Click the **File Name** drop-down list, and then select a file name prefix from the preset names provided, or from user-defined names. The file name used for the scanned document will be the file name prefix you select, followed by the last six digits of the flatbed/ADF scanner counter and the file extension (for example: "Estimate_098765.pdf").
10. Click the **Quality** drop-down list, and then select a quality setting. If you choose the **User Select** option, the machine will prompt users to select a setting each time they use the scan profile.
11. Click the **File Type** drop-down list, and then select the file type you want to use for the scanned document. If you choose the **User Select** option, the machine will prompt users to select a setting each time they use the scan profile.

12. Click the **Document Size** drop-down list, and then select your document size from the list. This is necessary to make sure the scanned file is the correct size.
13. Click the **File Size** drop-down list, and then select your file size from the list.
14. Click the **Remove Background Color** drop-down list, and then select the level from the list. You can use this feature to remove the background colour of documents to make the scanned data more legible.
15. To PIN-protect this profile, in the **Use PIN for Authentication** field, select **On**.
16. If you selected **On** for the **Use PIN for Authentication** field, type a four-digit PIN in the **PIN Code** field.
17. To set your authentication method, select **Auto**, **NTLMv2**, **Kerberos**, or **Basic** from the **Auth. Method** menu. If you choose **Auto**, the authentication method will be detected automatically.
18. In the **Username** field, type the user name (up to 96 characters) that has permission to write data to the folder specified in the **SharePoint Site Address** field. If the user name is part of a domain, enter the user name in one of the following styles:

    user@domain

    domain\user

19. In the **Password** field, type the password (up to 32 characters) associated with the user name you entered in the **Username** field. Type the password again in the **Retype password** field.
20. To set the Kerberos Server Address manually, in the **Kerberos Server Address** field, type the Kerberos Server Address (for example: kerberos.example.com; up to 64 characters).
21. Click **Submit**.

Using the following characters: ?, /, \, ", :, <, >, | or * may cause a sending error.

Related Information

- Scan to SharePoint

Upload Scanned Data to a SharePoint Server

1. Load your document.
2. Press [Scan].
3. Swipe left or right to display [to SharePoint].
4. Press [to SharePoint].

   The icon moves to the middle of the touchscreen and is highlighted in blue.
5. Press [to SharePoint].
6. The SharePoint server profiles you have set up using Web Based Management are listed. Swipe up or down or press ▲ or ▼ to select one of the SharePoint server profiles listed, and then press the profile you want. If the profile is not complete (for example, if the logon account name and password are missing, or if the quality or file type is not specified), you will be prompted to enter any missing information.
7. Press [Start].

   The machine starts scanning. If you are using the machine's scanner glass, follow the touchscreen instructions to complete the scanning job.

Related Information

- Scan to SharePoint

Web Services for Scanning on Your Network (Windows Vista SP2 or greater, Windows 7 and Windows 8)

The Web Services protocol enables Windows Vista (SP2 or greater), Windows 7 and Windows 8 users to scan using a Brother machine on the network. You must install the driver via Web Services.

- Use Web Services to Install Drivers Used for Scanning (Windows Vista, Windows 7 and Windows 8)
- Scan Using Web Services from the Brother Machine (Windows Vista SP2 or greater, Windows 7 and Windows 8)
- Configure Scan Settings for Web Services

Use Web Services to Install Drivers Used for Scanning (Windows Vista, Windows 7 and Windows 8)

Use Web Services to monitor printers on the network.

- Make sure you have installed the Brother software and drivers.
- Verify that the host computer and the Brother machine are on the same subnet, or that the router is correctly configured to pass data between the two devices.
- You must configure the IP address on your Brother machine before you configure this setting.
- For Windows Server 2008, Windows Server 2012 and Windows Server 2012 R2, you must install Print Services.

1. Do one of the following:
   - (Windows Vista)

     Click **(Start)** > **Network**.

     The machine's Web Services Name appears with the printer icon.

     Right-click the machine you want to install.
   - (Windows 7)

     Click **(Start)** > **Control Panel** > **Network and Internet** > **View network computers and devices**.

     The machine's Web Services Name appears with the printer icon.

     Right-click the machine you want to install.
   - (Windows 8)

     Move your mouse to the lower right corner of your desktop. When the menu bar appears, click **Settings** > **Change PC settings** > **Devices** > **Add a device**.

     The machine's Web Services Name appears.
   - (Windows 8.1)

     Move your mouse to the lower right corner of your desktop. When the menu bar appears, click **Settings** > **Change PC settings** > **PC and devices** > **Devices** > **Add a device**.

     The machine's Web Services Name appears.

- The Web Services Name for the Brother machine is your model name and the MAC Address (Ethernet Address) of your machine (for example, Brother MFC-XXXX (model name) [XXXXXXXXXXXX] (MAC Address / Ethernet Address)).
- (Windows 8)

  Move your mouse over the machine name to display the machine's information.

2. Do one of the following:
   - (Windows Vista/Windows 7)

     Click **Install** in the machine's drop-down menu.
   - (Windows 8)

     Select the machine you want to install.

To uninstall drivers, click **Uninstall** or (**Remove device**).

Related Information

- Web Services for Scanning on Your Network (Windows Vista SP2 or greater, Windows 7 and Windows 8)

Scan Using Web Services from the Brother Machine (Windows Vista SP2 or greater, Windows 7 and Windows 8)

If you have installed the driver for scanning via Web Services, you can access the Web Services scanning menu on your Brother machine's LCD.

Certain characters in the messages displayed on the LCD may be replaced with spaces if the language settings of your OS and your Brother machine are different.

1. Load your document.
2. Press [Scan].
3. Swipe left or right to display [WS Scan].
4. Press [WS Scan].

   The icon moves to the middle of the touchscreen and is highlighted in blue.
5. Press [WS Scan].
6. Swipe up or down or press ▲ or ▼ to display the scan options, and then press the type of scan.
7. Swipe up or down or press ▲ or ▼ to display the computer name where you want to send data, and then press the computer name.
8. Press [Start].

   The machine starts scanning.

If you are requested to select a scanning application, select Windows Fax and Scan or Windows Photo Gallery from the list.

Related Information

- Web Services for Scanning on Your Network (Windows Vista SP2 or greater, Windows 7 and Windows 8)

Configure Scan Settings for Web Services

1. Do one of the following:
   - (Windows Vista)

     Click **(Start)** > **Control Panel** > **Hardware and Sound** > **Scanners and Cameras**.
   - (Windows 7)

     Click **(Start)** > **Devices and Printers**.
   - (Windows 8)

     Move your mouse to the lower right corner of your desktop. When the menu bar appears, click **Settings**, and then click **Control Panel**. In the **Hardware and Sound** group, click **View devices and printers**.
2. Do one of the following:
   - (Windows Vista)

     Click your machine, and then click the **Scan Profiles** button. The **Scan Profiles** dialog box appears.
   - (Windows 7 and Windows 8)

     Right-click the machine icon, and then select **Scan profiles...**. The **Scan Profiles** dialog box appears.
3. Select the scan profile you want to use.
4. Make sure the scanner selected in the **Scanner** list is a Brother machine that supports Web Services for scanning, and then click the **Set as Default** button.
5. Click **Edit...**.

   The **Edit Default Profile** dialog box appears.
6. Select the **Source**, **Paper size**, **Color format**, **File type**, **Resolution (DPI)**, **Brightness** and **Contrast** settings.
7. Click the **Save Profile** button.

   These settings will be applied when you scan using the Web Services protocol.

If you are requested to select a scanning application, select Windows Fax and Scan or Windows Photo Gallery from the list.

Related Information

- Web Services for Scanning on Your Network (Windows Vista SP2 or greater, Windows 7 and Windows 8)

Change Scan Button Settings from ControlCenter4 (Windows)

1. Click the (**ControlCenter4**) icon in the task tray, and then click **Open**.
2. Click the **Device Settings** tab.
3. Click the **Device Scan Settings** button.

   The **Device Scan Settings** dialog box appears.

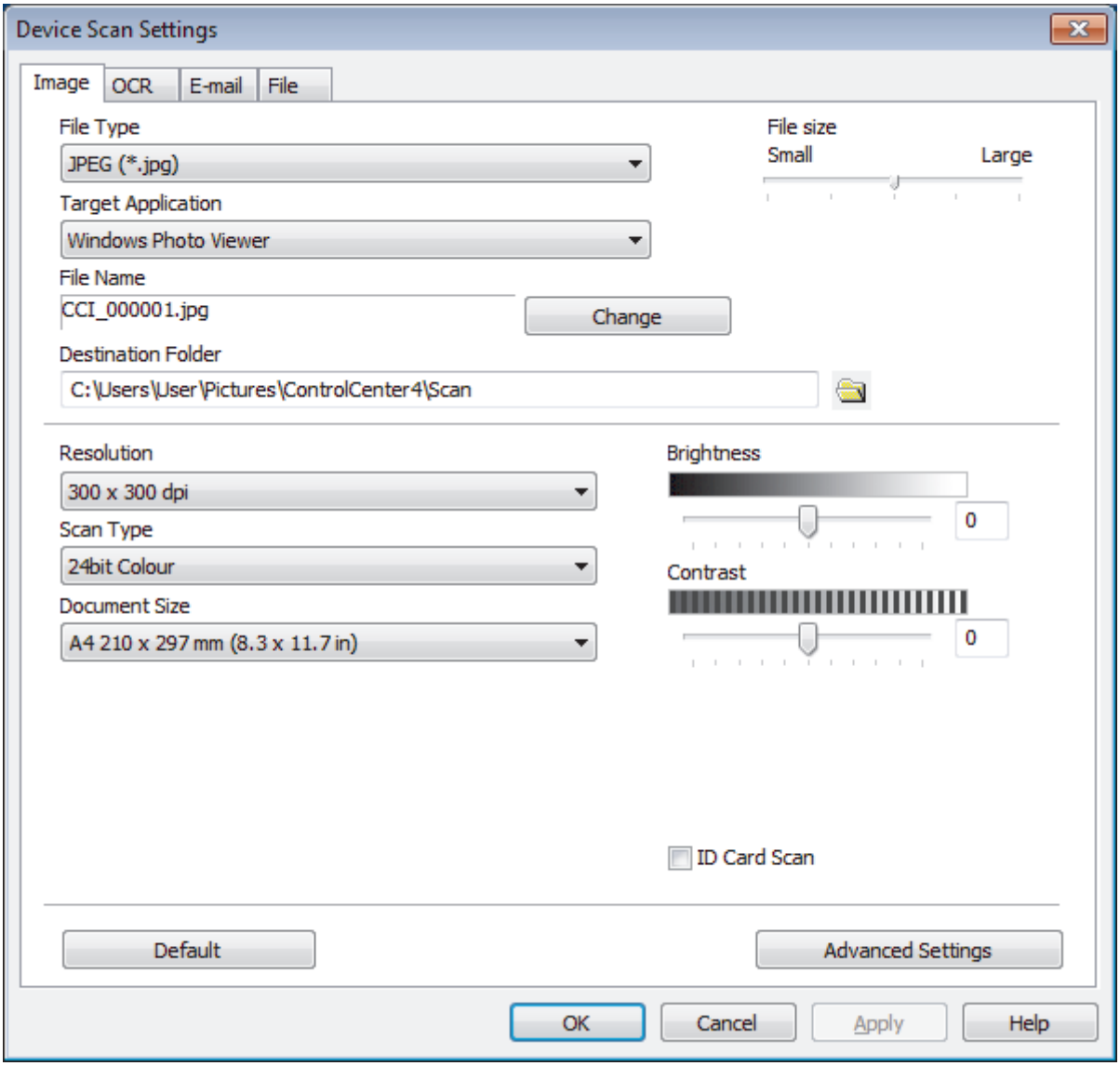

4. Click the tab for the Scan to action you want to change (**Image**, **OCR**, **E-mail**, or **File**).
5. Change the settings as needed.
6. Click **OK**.

Each tab represents one of the scanning destinations, as outlined in the table below.

Change your Scan to settings by clicking on the corresponding tab and customising the setting you want.

Tab Name	Corresponding Feature
Image	Scan to Image
OCR	Scan to OCR
E-mail	Scan to Email
File	Scan to File

Settings	Applicable Features			
	Image	**OCR**	**E-mail**	**File**
File Type	Yes	Yes	Yes	Yes
Target Application	Yes	Yes	-	-
OCR Language	-	Yes	-	-
File Name	Yes	Yes	Yes	Yes
Destination Folder	Yes	Yes	Yes	Yes
Show Folder	-	-	-	Yes
File size	Yes	-	Yes	Yes
Resolution	Yes	Yes	Yes	Yes
Scan Type	Yes	Yes	Yes	Yes
Document Size	Yes	Yes	Yes	Yes
Brightness	Yes	Yes	Yes	Yes
Contrast	Yes	Yes	Yes	Yes
ID Card Scan	Yes	Yes	Yes	Yes
Default	Yes	Yes	Yes	Yes

File Type

Select the file type you want to use for the scanned data.

Target Application

Select the destination application from the drop-down list.

OCR Language

Set the OCR language to match the language of the scanned document's text.

File Name

Click **Change** to change the file name's prefix.

Destination Folder

Click the folder icon to browse and select the folder where you want to save your scanned documents.

Show Folder

Select this option to automatically display the destination folder after scanning.

File size

Adjust the data compression ratio of the scanned image. Change the file size by moving the **File size** slider to the right or left.

Resolution

Select a scanning resolution from the **Resolution** drop-down list. Higher resolutions take more memory and transfer time, but produce a finer scanned image.

Scan Type

Select from a range of scan colour depths.

- **Auto**

  Use for any type of document. This mode automatically picks an appropriate colour depth for the document.

- **Black & White**

  Use for text or line art images.

- **Grey (Error Diffusion)**

  Use for photographic images or graphics. (Error Diffusion is a method for creating simulated grey images without using true grey dots. Black dots are put in a specific pattern to give a grey appearance.)

- **True Grey**

  Use for photographic images or graphics. This mode is more accurate because it uses up to 256 shades of grey.

- **24bit Colour**

  Use to create an image with the most accurate colour reproduction. This mode uses up to 16.8 million colours to scan the image, but it requires the most memory and has the longest transfer time.

Document Size

Select the exact size of your document from the **Document Size** drop-down list.

- If you select **1 to 2 (A4)**, the scanned image will be divided into two A5-size documents.

Brightness

Set the **Brightness** level by dragging the slider to the right or left to lighten or darken the image. If the scanned image is too light, set a lower brightness level and scan the document again. If the image is too dark, set a higher brightness level and scan the document again. You can also type a value into the field to set the **Brightness** level.

Contrast

Increase or decrease the **Contrast** level by moving the slider to the right or left. An increase emphasises dark and light areas of the image, while a decrease reveals more details in grey areas. You can also type a value into the field to set the **Contrast** level.

ID Card Scan

Select this check box to scan both sides of an identification card onto one page.

Default

Select this option to restore all settings to their factory setting values.

Related Information

- Scan Using the Scan Button on Your Brother Machine
- Scan Photos and Graphics
- Save Scanned Data to a Folder as a PDF File
- Scan to an Editable Text File (OCR)
- Scan to Email Attachment

Change Scan Button Settings from ControlCenter2 (Mac)

1. In the **Finder** menu bar, click **Go** > **Applications** > **Brother**, and then double-click the (**ControlCenter**) icon.

   The **ControlCenter2** screen appears.
2. Hold the control key on your keyboard and click the scan destination (**Image**, **OCR**, **E-mail**, or **File**) whose settings you want to change.
3. Click the **Device Button** tab.

   The settings for the scan destination that you selected appear.

   The following example shows the **Scan to Image** settings.

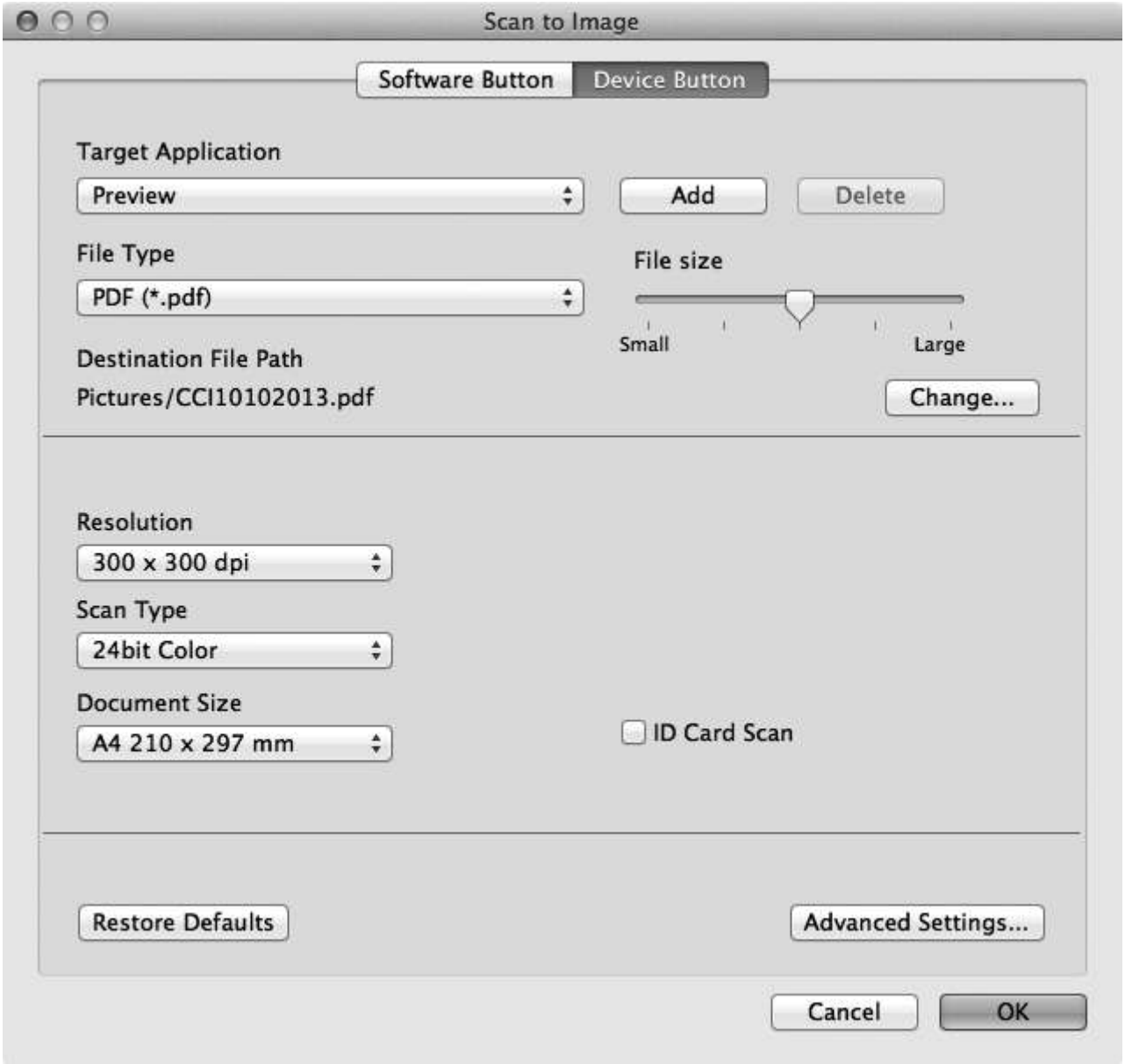

Each tab corresponds to a scan feature, as described below.

These settings can be changed.

Button Name	Corresponding Feature
Image	Scan to Image
OCR	Scan to OCR
E-mail	Scan to Email
File	Scan to File

Settings	Applicable Features			
	Image	**OCR**	**E-mail**	**File**
Target Application/E-mail Application	Yes	Yes	Yes	-
File Type	Yes	Yes	Yes	Yes
File size	Yes	-	Yes	Yes
OCR Language	-	Yes	-	-
Destination File Path	Yes	Yes	Yes	-
File Name	Yes	Yes	Yes	Yes
Insert Date in File Name	Yes	Yes	Yes	Yes
Destination Folder	Yes	Yes	Yes	Yes
Show Folder	-	-	-	Yes
Resolution	Yes	Yes	Yes	Yes
Scan Type	Yes	Yes	Yes	Yes
Document Size	Yes	Yes	Yes	Yes
ID Card Scan	Yes	Yes	Yes	Yes
Advanced Settings	Yes	Yes	Yes	Yes
Restore Defaults	Yes	Yes	Yes	Yes

Target Application/E-mail Application

Select which application is used to open scanned data. Only applications installed on your computer can be selected.

- **Add**

  Add an application to the pop-up menu.

  Type the application name in the **Application Name** field (up to 30 characters) and select your preferred application by clicking the **Browse** button. Select the **File Type** option from the pop-up menu.

- **Delete**

  Delete an application you have added to the pop-up menu.

  Select the application from the **Application Name** pop-up menu, and then click **Delete**.

File Type

Select the file type you want to use for the scanned data.

File size

Change the file size by moving the **File size** slider to the right or left.

OCR Language

Set the OCR language to match the language of the scanned document's text.

Destination File Path

Click the **Change** button to change the prefix of the file name and the path of the destination folder.

File Name

Type a prefix for your file name, if needed.

Insert Date in File Name

Automatically insert the date in the file name of the scanned image.

Destination Folder

Click **Browse** to select the folder where you would like to save your scanned document.

Show Folder

Select the **Show Folder** option to automatically display the destination folder after scanning.

Resolution

Select a scanning resolution from the **Resolution** pop-up menu. Higher resolutions take more memory and transfer time, but produce a finer scanned image.

Scan Type

Select from a range of scan colour depths.

- **Black & White**

  Use for text or line art images.
- **Gray (Error Diffusion)**

  Use for photographic images or graphics. (Error Diffusion is a method for creating simulated grey images without using true grey dots. Black dots are put in a specific pattern to give a grey appearance.)
- **True Gray**

  Use for photographic images or graphics. This mode is more accurate because it uses up to 256 shades of grey.
- **24bit Color**

  Use to create an image with the most accurate colour reproduction. This mode uses up to 16.8 million colours to scan the image, but it requires the most memory and has the longest transfer time.
- **Auto**

  Use for any type of document. This mode automatically picks an appropriate colour depth for the document.

Document Size

Select the exact size of your document from the **Document Size** pop-up menu.

- If you select **1 to 2 (A4)**, the scanned image will be divided into two A5-size documents.

ID Card Scan

Select this check box to scan both sides of an identification card onto one page.

Advanced Settings

Configure advanced settings by clicking the **Advanced Settings** button in the Scan Settings dialog box.

- **Brightness**

  Set the **Brightness** level by dragging the slider to the right or left to lighten or darken the image. If the scanned image is too light, set a lower brightness level and scan the document again. If the image is too dark, set a higher brightness level and scan the document again.
- **Contrast**

  Increase or decrease the **Contrast** level by moving the slider to the right or left. An increase emphasise dark and light areas of the image, while a decrease reveals more details in grey areas.
- **ADF Auto Deskew**

  When scanning the document from the ADF, the machine corrects skewing of the document automatically.
- **Remove Background Color**

  Remove the base colour of documents to make the scanned data more recognisable. When you use this function, select from three settings: high, medium, and low.

(Available only for the **Auto**, **True Gray** and **24bit Color** options)

- **Skip Blank Page**

  Remove blank pages of the document from the scanning results.

  (MFC-L5755DW/MFC-L5900DW/MFC-L6700DW/MFC-L6900DW)

- **Display Scanning Results**

  Show the numbers of total pages saved and blank pages skipped on your computer screen.

  (MFC-L5755DW/MFC-L5900DW/MFC-L6700DW/MFC-L6900DW)

Restore Defaults

Select this option to restore all settings to their factory setting values.

Related Information

- Scan Using the Scan Button on Your Brother Machine
- Scan Photos and Graphics
- Save Scanned Data to a Folder as a PDF File
- Scan to an Editable Text File (OCR)
- Scan to Email Attachment

Configure Certificate for Signed PDF

If you select Signed PDF for Scan to USB, Scan to Email server, Scan to FTP, Scan to SFTP, Scan to Network or Scan to SharePoint features, you must configure a certificate on your machine using Web Based Management.

To use Signed PDF, you must install a certificate on your machine and your computer.

1. Start your web browser.

   Type "http://machine's IP address" in your browser's address bar (where "machine's IP address" is the IP address of the machine or the print server name). For example: http://192.168.1.2

   No password is required by default. If you have previously set a password, type it, and then press .

2. Click the **Administrator** tab.
3. Click the **Signed PDF** menu in the left navigation bar.

   The Signed PDF configuration dialog box appears.

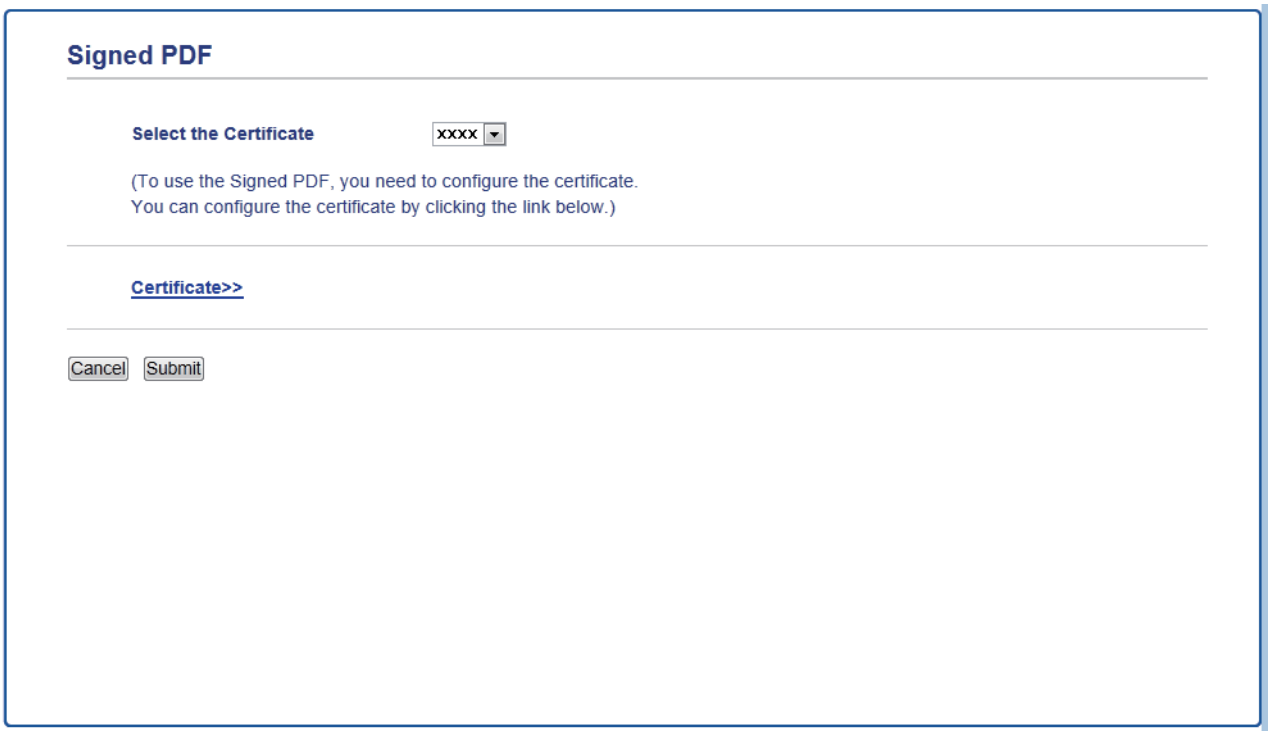

4. Click the **Select the Certificate** drop-down list, and then select the certificate.
5. Click **Submit**.

Related Information

- Scan Using the Scan Button on Your Brother Machine

Disable Scanning from Your Computer

You can disable the ability to scan from your computer. Set the pull scan setting using Web Based Management.

1. Start your web browser.

   Type "http://machine's IP address" in your browser's address bar (where "machine's IP address" is the IP address of the machine or the print server name). For example: http://192.168.1.2

   No password is required by default. If you have previously set a password, type it, and then press .
2. Click the **Scan** tab.
3. Click the **Scan from PC** menu in the left navigation bar.
4. In the **Pull Scan** field, click **Disabled**.
5. Click **Submit**.

Related Information

- Scan Using the Scan Button on Your Brother Machine

Scan from Your Computer (Windows)

There are several ways you can use your computer to scan photos and documents on your Brother machine. Use the software applications provided by Brother, or use your favourite scanning application.

- Scan Using ControlCenter4 Home Mode (Windows)
- Scan Using ControlCenter4 Advanced Mode (Windows)
- Scan Using Nuance™ PaperPort™ 14SE or Other Windows Applications
- Scan Using Windows Photo Gallery or Windows Fax and Scan

Scan Using ControlCenter4 Home Mode (Windows)

Use ControlCenter4 Home Mode to access your machine's main features.

- Scan Using ControlCenter4 Home Mode (Windows)
- Save Scanned Data to a Folder as a PDF File Using ControlCenter4 Home Mode (Windows)
- Scan Both Sides of a Document Automatically Using ControlCenter4 Home Mode (Windows)
- Scan Settings for ControlCenter4 Home Mode (Windows)

Scan Using ControlCenter4 Home Mode (Windows)

Select **Home Mode** as the mode setting for ControlCenter4.

1. Load your document.
2. Click the (**ControlCenter4**) icon in the task tray, and then click **Open**.
3. Click the **Scan** tab.

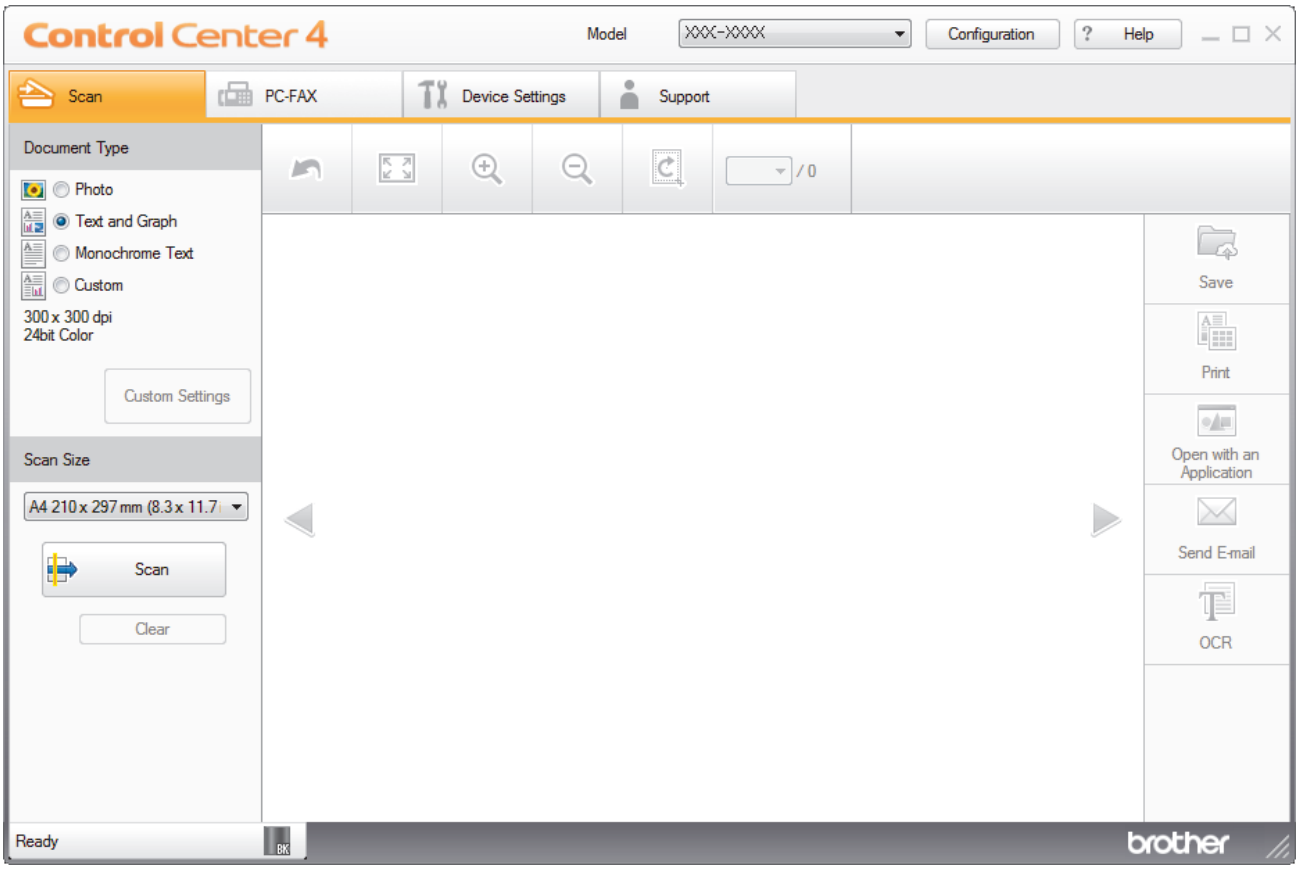

4. Select the **Document Type**.
5. Change the document's **Scan Size**, if needed.
6. Click (**Scan**).

   The machine starts scanning, and the scanned image appears in the image viewer.
7. Click the left or right arrow buttons to preview each scanned page.
8. Crop the scanned image, if needed.
9. Do one of the following:
   - Click (**Save**) to save scanned data.
   - Click (**Print**) to print scanned data.
   - Click (**Open with an Application**) to open scanned data in another application.
   - Click (**Send E-mail**) to attach scanned data to an email.
   - Click (**OCR**) to convert your scanned document to an editable text file. (available only for certain models)

Related Information

- Scan Using ControlCenter4 Home Mode (Windows)
- Select Document Type Using ControlCenter4 Home Mode (Windows)
- Change Scan Size Using ControlCenter4 Home Mode (Windows)
- Crop a Scanned Image Using ControlCenter4 Home Mode (Windows)
- Print Scanned Data Using ControlCenter4 Home Mode (Windows)
- Scan to an Application Using ControlCenter4 Home Mode (Windows)

Select Document Type Using ControlCenter4 Home Mode (Windows)

- Select the **Document Type** option that matches the type of original you want to scan.

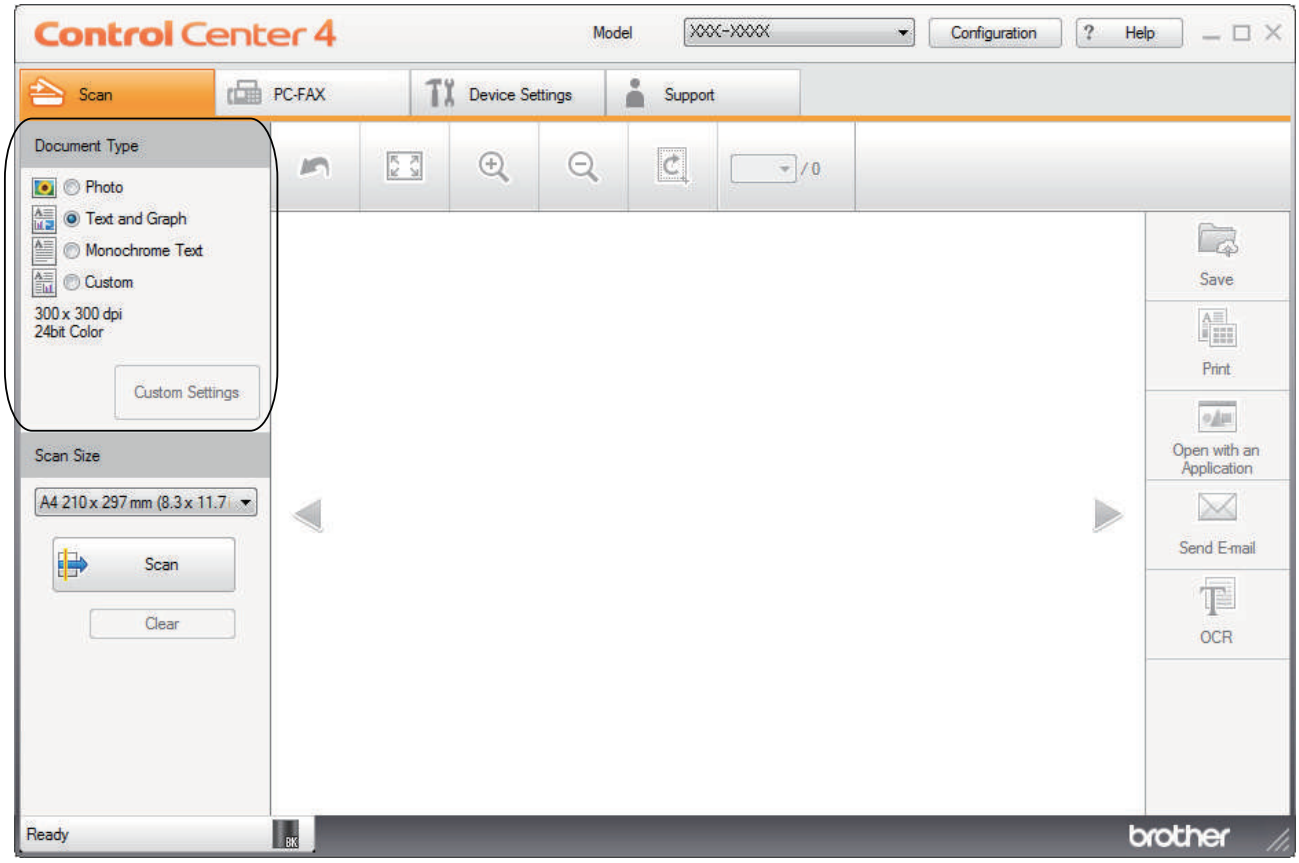

Option	Description
Photo	**600 x 600 dpi 24bit Colour**
Text and Graph	**300 x 300 dpi 24bit Colour**
Monochrome Text	**200 x 200 dpi Black & White**
Custom	**300 x 300 dpi** (**24bit Colour** as default) Select the scan settings you want from the **Custom Settings** button.

Related Information

- Scan Using ControlCenter4 Home Mode (Windows)
- Custom Scan Settings (Windows)

Custom Scan Settings (Windows)

Select **Custom** in the **Document Type** list to change advanced scan settings.

- Select **Custom**, and then click the **Custom Settings** button.

  The **Custom Scan Settings** dialog box appears.

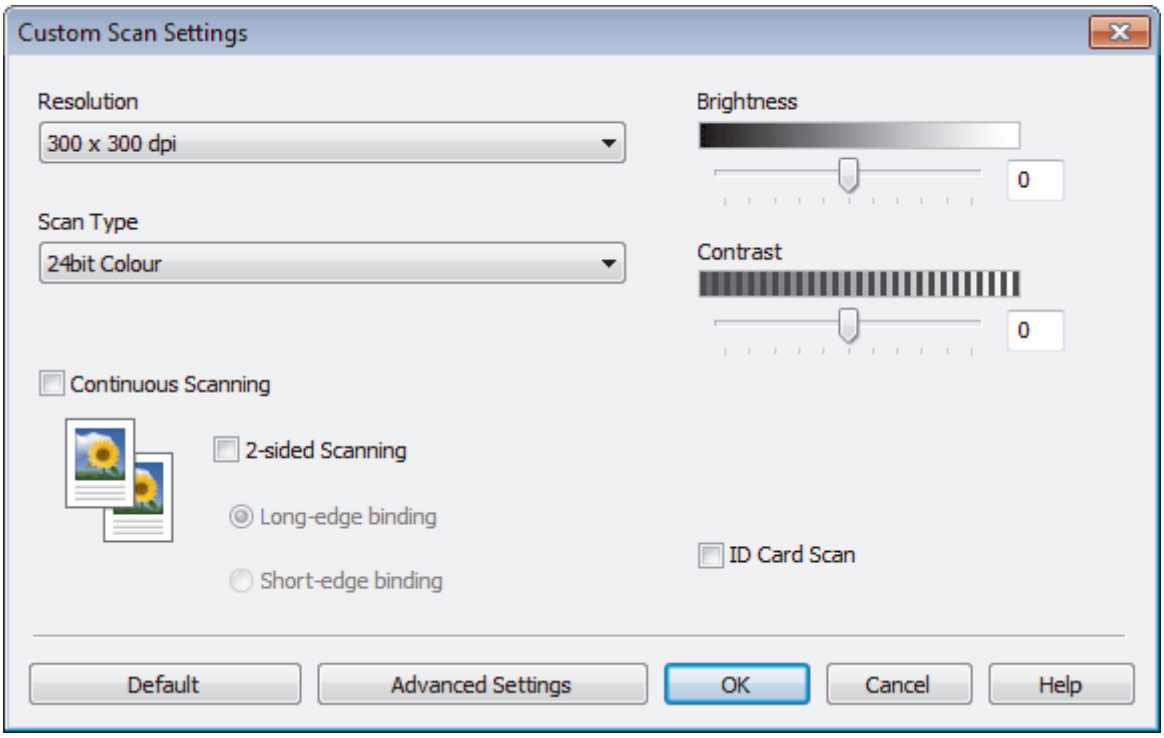

You can change the following settings:

Resolution

Select a scanning resolution from the **Resolution** drop-down list. Higher resolutions take more memory and transfer time, but produce a finer scanned image.

Scan Type

Select from a range of scan colour depths.

- **Auto**

  Use for any type of document. This mode automatically picks an appropriate colour depth for the document.

- **Black & White**

  Use for text or line art images.

- **Grey (Error Diffusion)**

  Use for photographic images or graphics. (Error Diffusion is a method for creating simulated grey images without using true grey dots. Black dots are put in a specific pattern to give a grey appearance.)

- **True Grey**

  Use for photographic images or graphics. This mode is more accurate because it uses up to 256 shades of grey.

- **24bit Colour**

  Use to create an image with the most accurate colour reproduction. This mode uses up to 16.8 million colours to scan the image, but it requires the most memory and has the longest transfer time.

Brightness

Set the **Brightness** level by dragging the slider to the right or left to lighten or darken the image. If the scanned image is too light, set a lower brightness level and scan the document again. If the image is too dark, set a higher brightness level and scan the document again. You can also type a value into the field to set the **Brightness** level.

Contrast

Increase or decrease the **Contrast** level by moving the slider to the right or left. An increase emphasises dark and light areas of the image, while a decrease reveals more details in grey areas. You can also type a value into the field to set the **Contrast** level.

Continuous Scanning

Select this option to scan multiple pages from the scanner glass or ADF (Available only for certain models). After a page is scanned, select either continue scanning or finish. Use this method to scan more pages than the maximum ADF capacity.

2-sided Scanning

Select this check box to scan both sides of the document. When using the Automatic 2-sided Scan feature, you must select the **Long-edge binding** or **Short-edge binding** option, depending on the layout of your original, to make sure the data file you create appears correctly.

(MFC-L5755DW/MFC-L5900DW/MFC-L6700DW/MFC-L6900DW)

ID Card Scan

Select this check box to scan both sides of an identification card onto one page.

Advanced Settings

Configure advanced settings by clicking the **Advanced Settings** button in the Scan Settings dialog box.

- **Remove Background Colour**

  Remove the base colour of documents to make the scanned data more legible. Choose from three settings: high, medium, and low.

  (available only for the **Auto**, **True Grey** and **24bit Colour** options)

- **Skip Blank Page**

  Remove the document's blank pages from the scanning results.

  (MFC-L5755DW/MFC-L5900DW/MFC-L6700DW/MFC-L6900DW)

- **Display Scanning Results**

  Show the numbers of total pages saved and blank pages skipped on your computer screen.

  (MFC-L5755DW/MFC-L5900DW/MFC-L6700DW/MFC-L6900DW)

- **ADF Auto Deskew**

  When scanning the document from the ADF, the machine corrects skewing of the document automatically.

Related Information

- Select Document Type Using ControlCenter4 Home Mode (Windows)

Change Scan Size Using ControlCenter4 Home Mode (Windows)

For faster scan speeds, select the exact size of your document from the **Scan Size** drop-down menu.

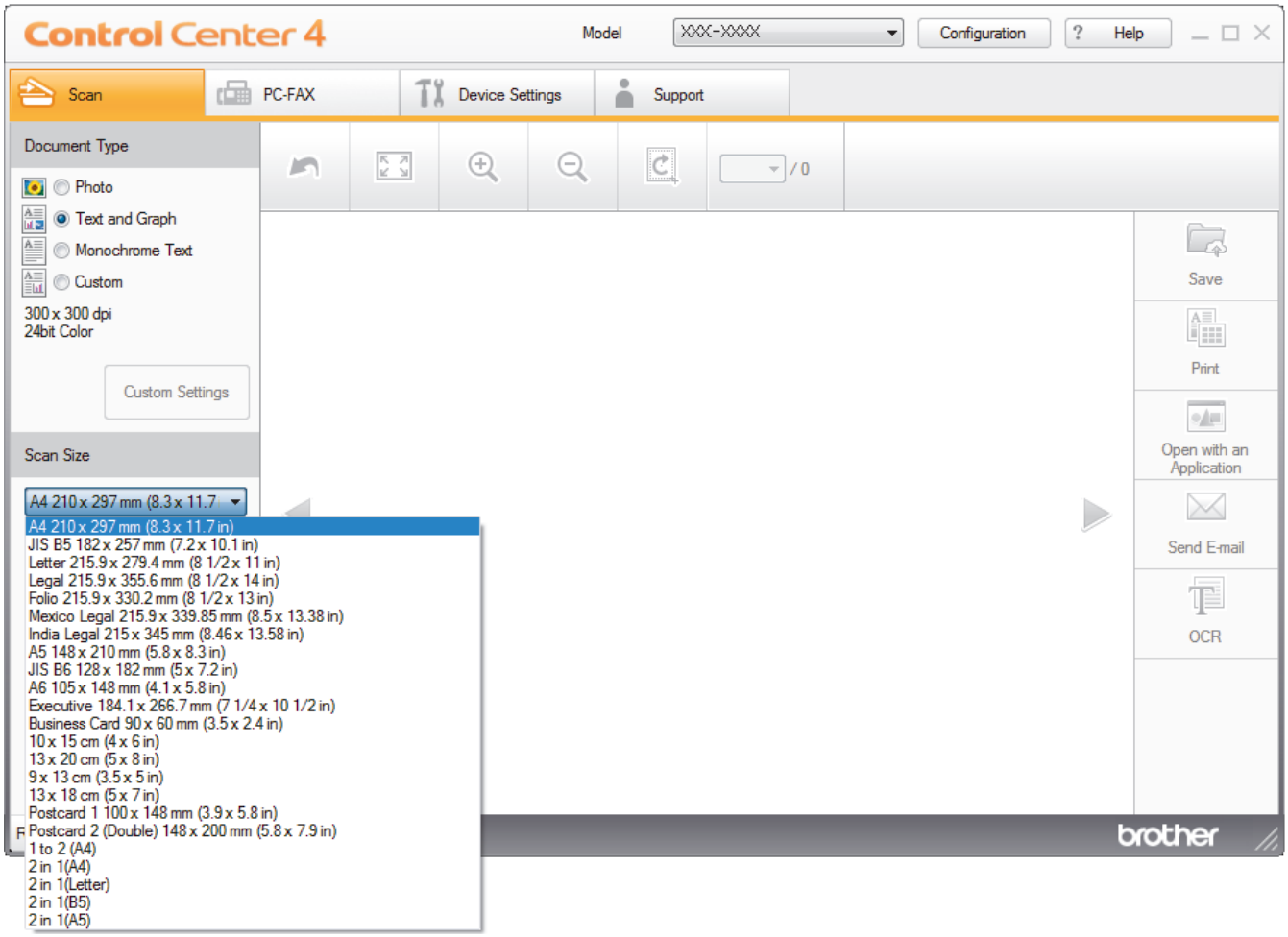

Related Information

- Scan Using ControlCenter4 Home Mode (Windows)

Crop a Scanned Image Using ControlCenter4 Home Mode (Windows)

The crop tool on the Image Editing Toolbar lets you trim unwanted areas from your scanned image. Use the **Zoom In** and **Zoom Out** tools to help view the image to be cropped.

Image Editing Toolbar

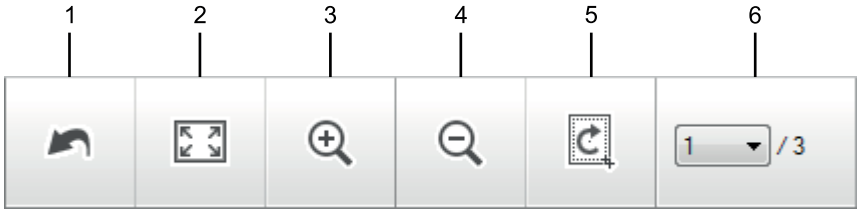

1. **Restart**

   Cancels all the edits applied to the selected image. The edited image returns to its original state.
2. **Fit to Window**

   Displays the scanned image so that the entire image fits in the window.
3. **Zoom In**

   Zooms in on the scanned image.
4. **Zoom Out**

   Zooms out of the scanned image.
5. **Crop and Edit**

   Removes the outer parts of the image. Click the **Crop and Edit** button, and then change the frame to contain the area you want to keep after cropping.
6. **Page Counter**

   Indicates the page number of the scanned page currently shown in the image viewer. To display a different page, select the desired page number from the drop-down page number list.

If you have scanned multiple pages, you can see the next or previous scanned page by clicking the left or right arrow buttons in the preview window.

1. Scan a document.
2. Click (**Crop and Edit**) to edit the scanned image.

   The **Crop and Edit - ControlCenter4** window appears.

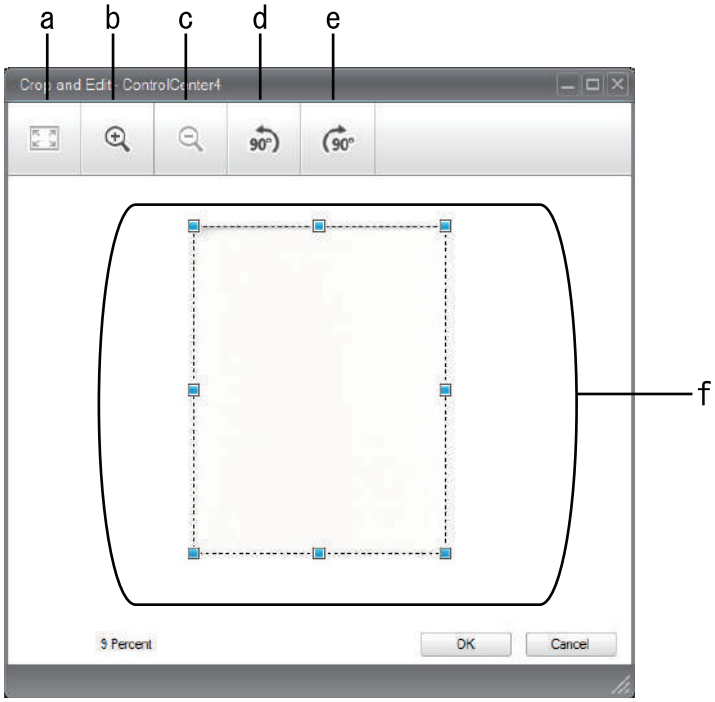

a. Expands the scanned image so that the entire image fits in the window.
b. Zooms in on the image.
c. Zooms out of the image.
d. Rotates the image counter-clockwise 90 degrees.
e. Rotates the image clockwise 90 degrees.
f. Click and drag the frame to adjust the area to be cropped.

3. Click **OK**.
   The edited image appears in the image viewer.

Related Information

- Scan Using ControlCenter4 Home Mode (Windows)

Print Scanned Data Using ControlCenter4 Home Mode (Windows)

Scan a document on your Brother machine, and then print copies using the printer driver features that are available in ControlCenter4.

1. Scan a document.
2. Click **Print**.

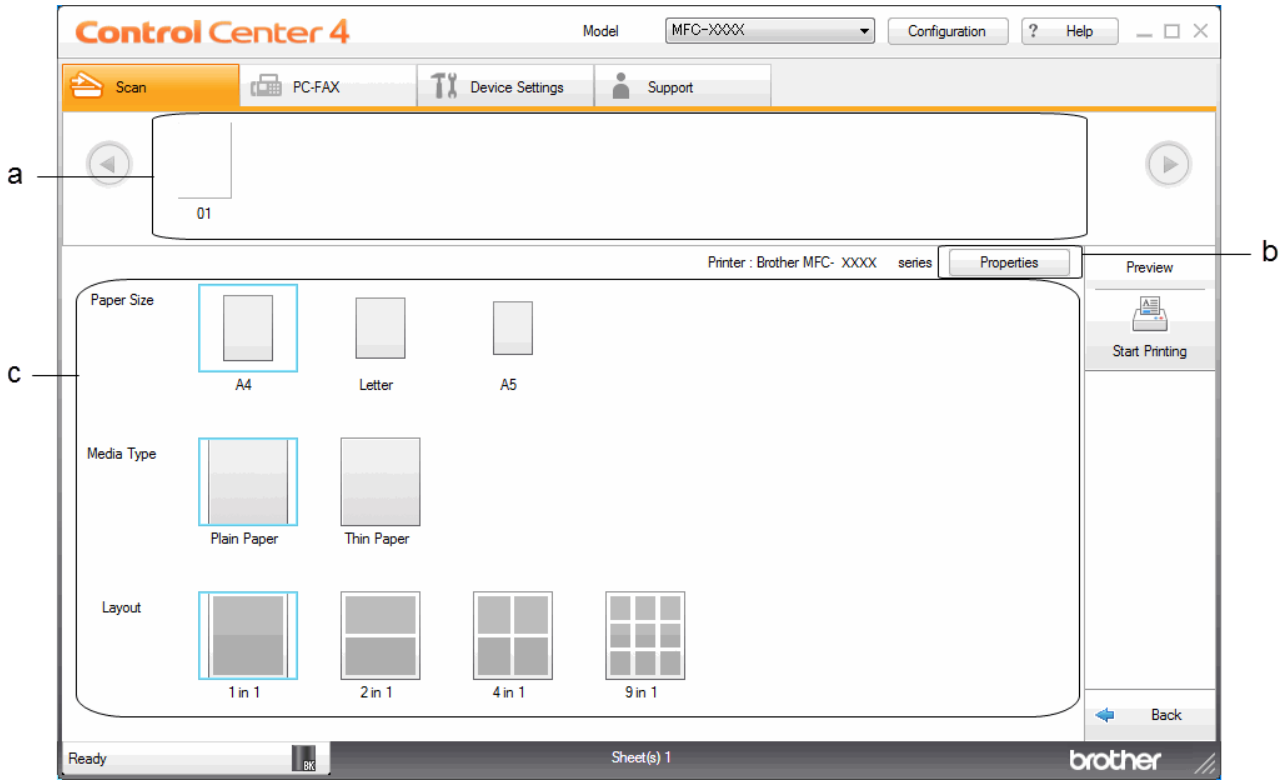

a. Shows which images are currently selected, and how many copies of each image will print.

b. Click the **Properties** button to change specific printer settings.

c. Select the **Paper Size**, **Media Type** and **Layout** options. The current settings are enclosed in a blue square.

3. Configure the print settings, and then click the **Start Printing** button.

Related Information

- Scan Using ControlCenter4 Home Mode (Windows)

Scan to an Application Using ControlCenter4 Home Mode (Windows)

The **Open with an Application** button lets you scan an image directly into your graphics application for editing.

Select **Home Mode** as the mode setting for ControlCenter4.

1. Load your document.
2. Click the (**ControlCenter4**) icon in the task tray, and then click **Open**.
3. Click the **Scan** tab.

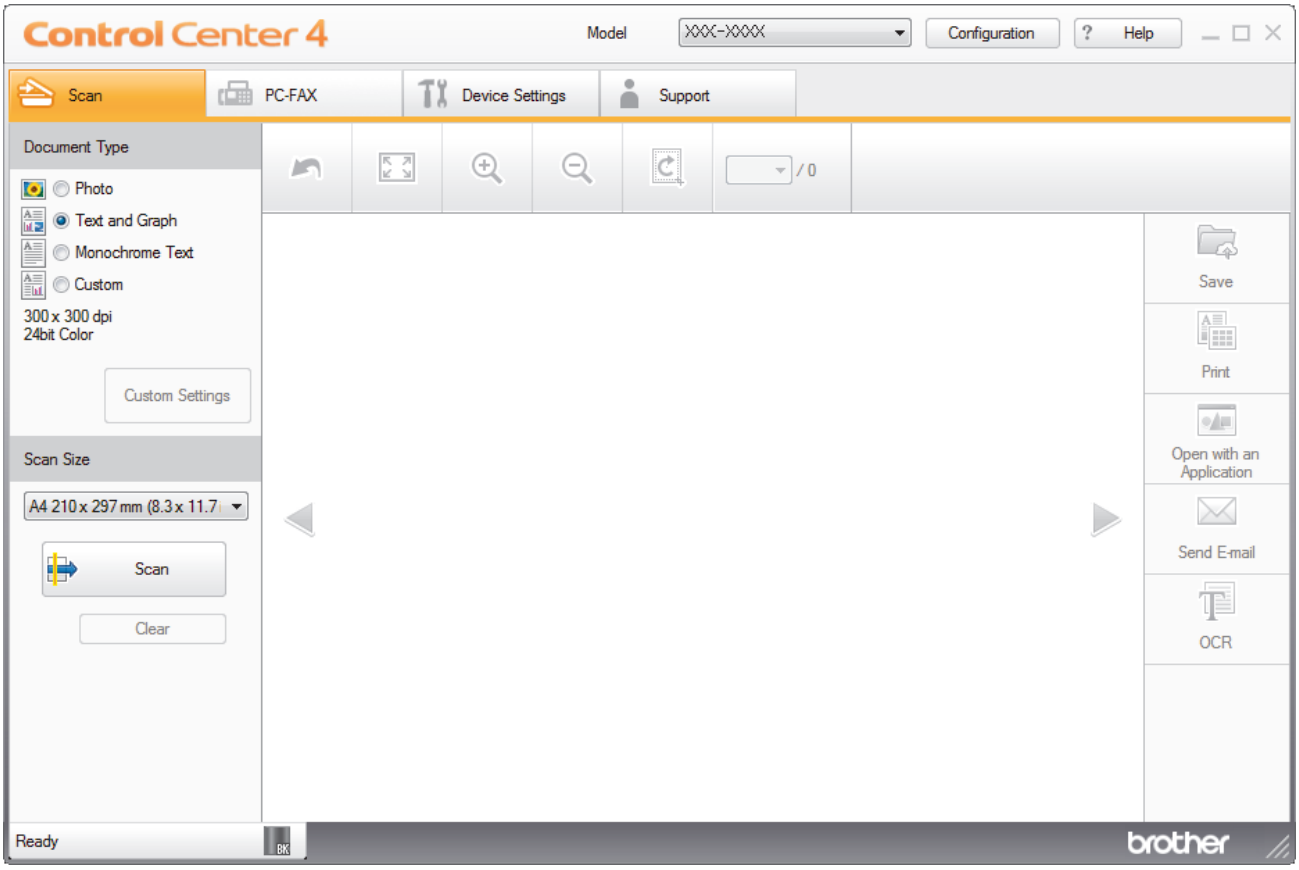

4. Select the **Document Type**.
5. Change the size of your document, if needed.
6. Click (**Scan**).

   The machine starts scanning, and the scanned image appears in the image viewer.
7. Click the left or right arrow buttons to preview each scanned page.
8. Crop the scanned image, if needed.
9. Click the **Open with an Application** button.
10. Select the application from the drop-down list, and then click **OK**.

    The image opens in the application you have selected.

Related Information

- Scan Using ControlCenter4 Home Mode (Windows)

Save Scanned Data to a Folder as a PDF File Using ControlCenter4 Home Mode (Windows)

Select **Home Mode** as the mode setting for ControlCenter4.

1. Load your document.
2. Click the (**ControlCenter4**) icon in the task tray, and then click **Open**.
3. Click the **Scan** tab.

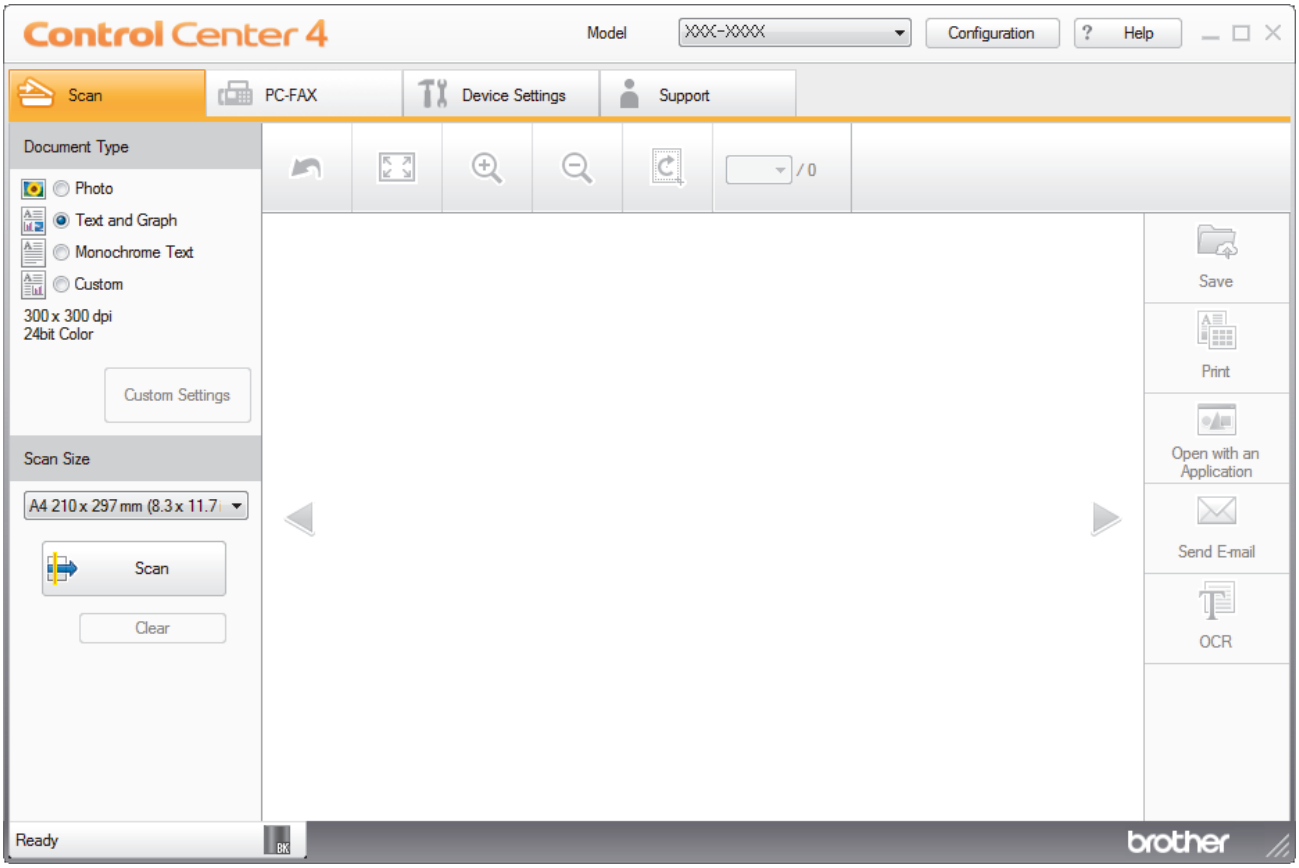

4. Select the **Document Type**.
5. Change the size of your document, if needed.
6. Click (**Scan**).

   The machine starts scanning, and the scanned image appears in the image viewer.
7. Click the left or right arrow buttons to preview each scanned page.
8. Click **Save**.

   The **Save** dialog box appears.
9. Click the **File Type** drop-down list, and then select a PDF file.

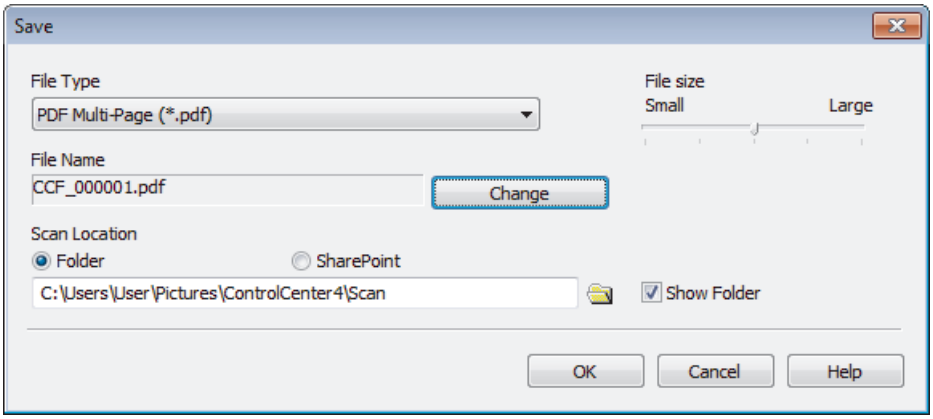

To save the document as a password-protected PDF, select **Secure PDF Single-Page (*.pdf)** or **Secure PDF Multi-Page (*.pdf)** from the **File Type** drop-down list, click , and then type the password.

10. To change the file name, click the **Change** button, if needed.
11. Click the folder icon to browse and select the folder where you want to save your scanned documents.
12. Click **OK**.

    The scanned document is saved to the destination folder as a PDF.

Related Information

- Scan Using ControlCenter4 Home Mode (Windows)

Scan Both Sides of a Document Automatically Using ControlCenter4 Home Mode (Windows)

Related Models: MFC-L5755DW/MFC-L5900DW/MFC-L6700DW/MFC-L6900DW

Select **Home Mode** as the mode setting for ControlCenter4.

1. Load documents in the ADF.

To scan both sides of a document automatically, you must use the ADF, not the flatbed scanner glass.

2. Click the (**ControlCenter4**) icon in the task tray, and then click **Open**.
3. Click the **Scan** tab.

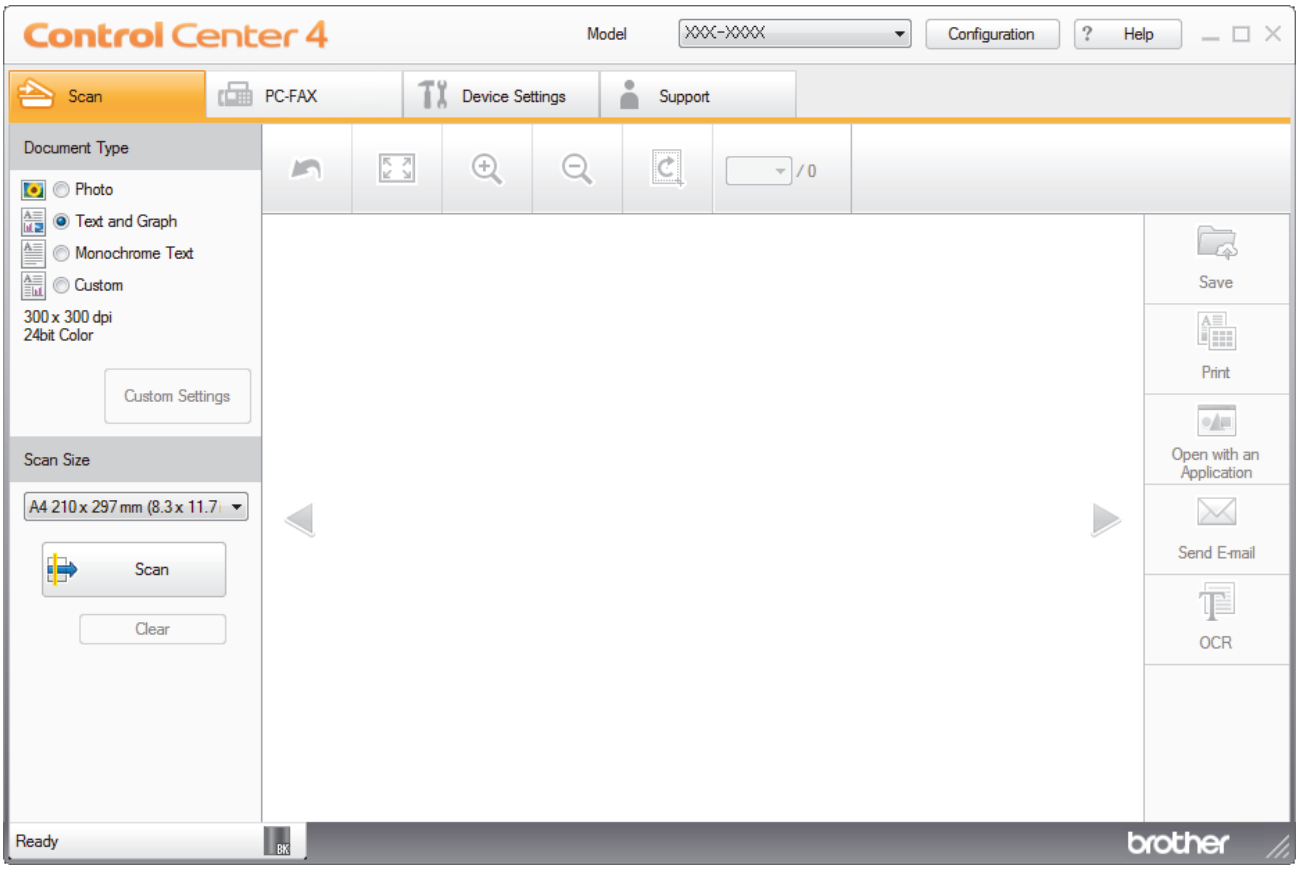

4. Under **Document Type**, select **Custom**, and then click the **Custom Settings** button.

   The **Custom Scan Settings** dialog box appears.
5. Select the **2-sided Scanning** check box.
6. Select the **Long-edge binding** or **Short-edge binding** option, depending on the Original layout (see table for layout examples).

2-sided Scan setting	Original layout	Scan Result
Long-edge binding	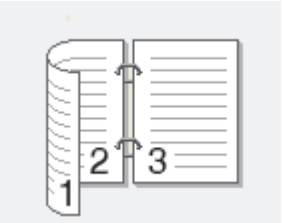	

2-sided Scan setting	Original layout	Scan Result
Short-edge binding	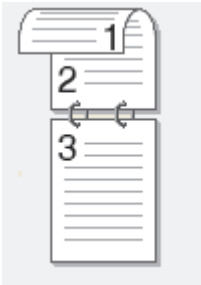	

7. Configure other **Custom Scan Settings**, if needed.
8. Click **OK**.
9. Click (**Scan**).

   The machine starts scanning, and the scanned image appears in the image viewer.
10. Click the left or right arrow buttons to preview each scanned page.
11. Do one of the following:
    - Click (**Save**) to save scanned data.
    - Click (**Print**) to print scanned data.
    - Click (**Open with an Application**) to open scanned data in another application.
    - Click (**Send E-mail**) to attach scanned data to an email.
    - Click (**OCR**) to convert your scanned document to an editable text file. (available only for certain models)

Related Information

- Scan Using ControlCenter4 Home Mode (Windows)

Scan Settings for ControlCenter4 Home Mode (Windows)

Settings	Applicable Features			
	Open with an Application	**OCR**	**Send E-mail**	**Save**
File Type	-	Yes	Yes	Yes
Target Application	Yes	Yes	-	-
OCR Language	-	Yes	-	-
File Name	-	-	-	Yes
Scan Location	-	-	-	Yes
Show Folder	-	-	-	Yes
File size	-	-	Yes	Yes

File Type

Select the file type you want to use for the scanned data.

For Send E-mail and Save

- **Windows Bitmap (*.bmp)**
- **JPEG (*.jpg)** (recommended for most users when scanning pictures)
- **TIFF Single-Page (*.tif)**
- **TIFF Multi-Page (*.tif)**
- **Portable Network Graphics (*.png)**
- **PDF Single-Page (*.pdf)** (recommended for scanning and sharing documents)
- **PDF Multi-Page (*.pdf)** (recommended for scanning and sharing documents)
- **PDF/A Single-Page (*.pdf)** (recommended for scanning and sharing documents)
- **PDF/A Multi-Page (*.pdf)** (recommended for scanning and sharing documents)
- **High Compression PDF Single-Page (*.pdf)**
- **High Compression PDF Multi-Page (*.pdf)**
- **Secure PDF Single-Page (*.pdf)**
- **Secure PDF Multi-Page (*.pdf)**
- **Searchable PDF Single-Page (*.pdf)**
- **Searchable PDF Multi-Page (*.pdf)**
- **XML Paper Specification (*.xps)** (the XML Paper Specification is available for Windows Vista, Windows 7 and Windows 8, and when using applications that support XML Paper Specification files)
- **Microsoft Office Word (*.docx)** (Available only for certain models)
- **Microsoft Office PowerPoint (*.pptx)** (Available only for certain models)

For OCR

- **HTML 3.2 (*.htm)**
- **HTML 4.0 (*.htm)**
- **Microsoft Excel 2003, XP (*.xls)**
- **RTF Word 2000 (*.rtf)**
- **WordPad (*.rtf)**
- **WordPerfect 9, 10 (*.wpd)**
- **Text (*.txt)**
- **Searchable PDF Single-Page (*.pdf)**
- **Searchable PDF Multi-Page (*.pdf)**

Target Application

Select the destination application from the drop-down list.

OCR Language

Set the optical character recognition (OCR) language to match the language of the scanned document's text.

File Name

Click **Change** to change the file name's prefix.

Scan Location

Select the **Folder** or **SharePoint** button to specify the destination where you would like to save your scanned documents.

Show Folder

Select this option to automatically display the destination folder after scanning.

File size

Adjust the data compression ratio of the scanned image. Change the file size by moving the **File size** slider to the right or left.

Custom Settings

Select the **Custom** option, click the **Custom Settings** button, and then change settings.

Scan Size

Select the exact size of your document from the **Scan Size** drop-down menu.

Related Information

- Scan Using ControlCenter4 Home Mode (Windows)

Scan Using ControlCenter4 Advanced Mode (Windows)

ControlCenter4 Advanced Mode gives you more control over the details of your machine's features and allows you to customise one-button scan actions.

- Scan Photos and Graphics Using ControlCenter4 Advanced Mode (Windows)
- Save Scanned Data to a Folder as a PDF File Using ControlCenter4 Advanced Mode (Windows)
- Scan Both Sides of a Document Automatically Using ControlCenter4 Advanced Mode (Windows)
- Scan Both Sides of an ID Card Using ControlCenter4 Advanced Mode (Windows)
- Scan to Email Attachment Using ControlCenter4 Advanced Mode (Windows)
- Scan to an Editable Text File (OCR) Using ControlCenter4 Advanced Mode (Windows)
- Scan Settings for ControlCenter4 Advanced Mode (Windows)

Scan Photos and Graphics Using ControlCenter4 Advanced Mode (Windows)

Send scanned photos or graphics directly to your computer.

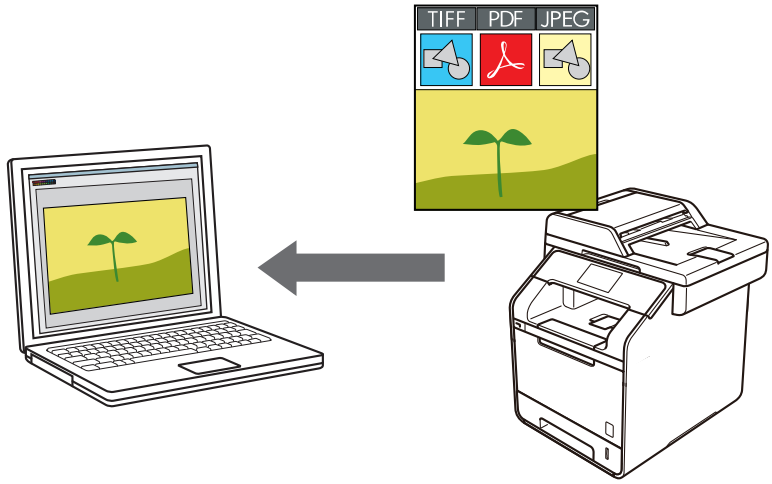

Select **Advanced Mode** as the mode setting for ControlCenter4.

1. Load your document.
2. Click the (**ControlCenter4**) icon in the task tray, and then click **Open**.
3. Click the **Scan** tab.

4. Click the **Image** button.

   The scan settings dialog box appears.

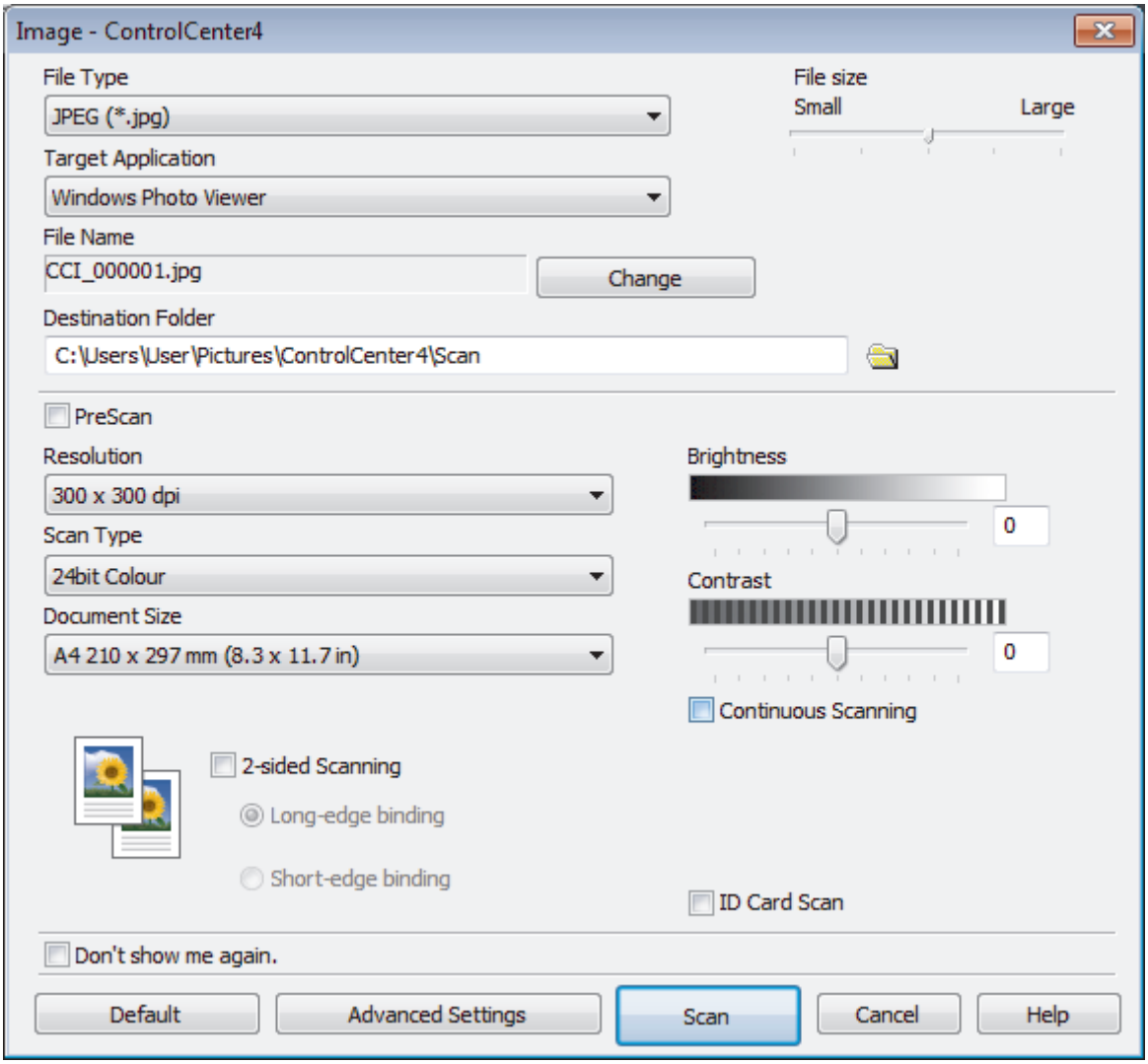

5. Change the scan settings, such as file format, file name, destination file path, resolution and colour, if needed.

- To change the file name, click **Change**.
- To change **Destination Folder**, click the folder icon.
- To preview and configure the scanned image, select the **PreScan** check box.

6. Click **Scan**.

   The machine starts scanning. The image opens in the application you have selected.

Related Information

- Scan Using ControlCenter4 Advanced Mode (Windows)

Save Scanned Data to a Folder as a PDF File Using ControlCenter4 Advanced Mode (Windows)

Scan documents and save them to a folder on your computer as PDF files.

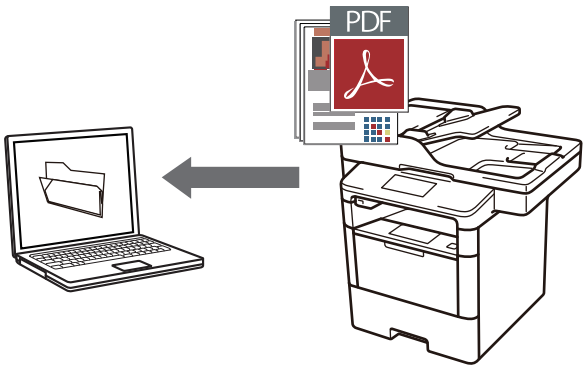

Select **Advanced Mode** as the mode setting for ControlCenter4.

1. Load your document.
2. Click the (**ControlCenter4**) icon in the task tray, and then click **Open**.
3. Click the **Scan** tab.

4. Click the **File** button.

   The scan settings dialog box appears.

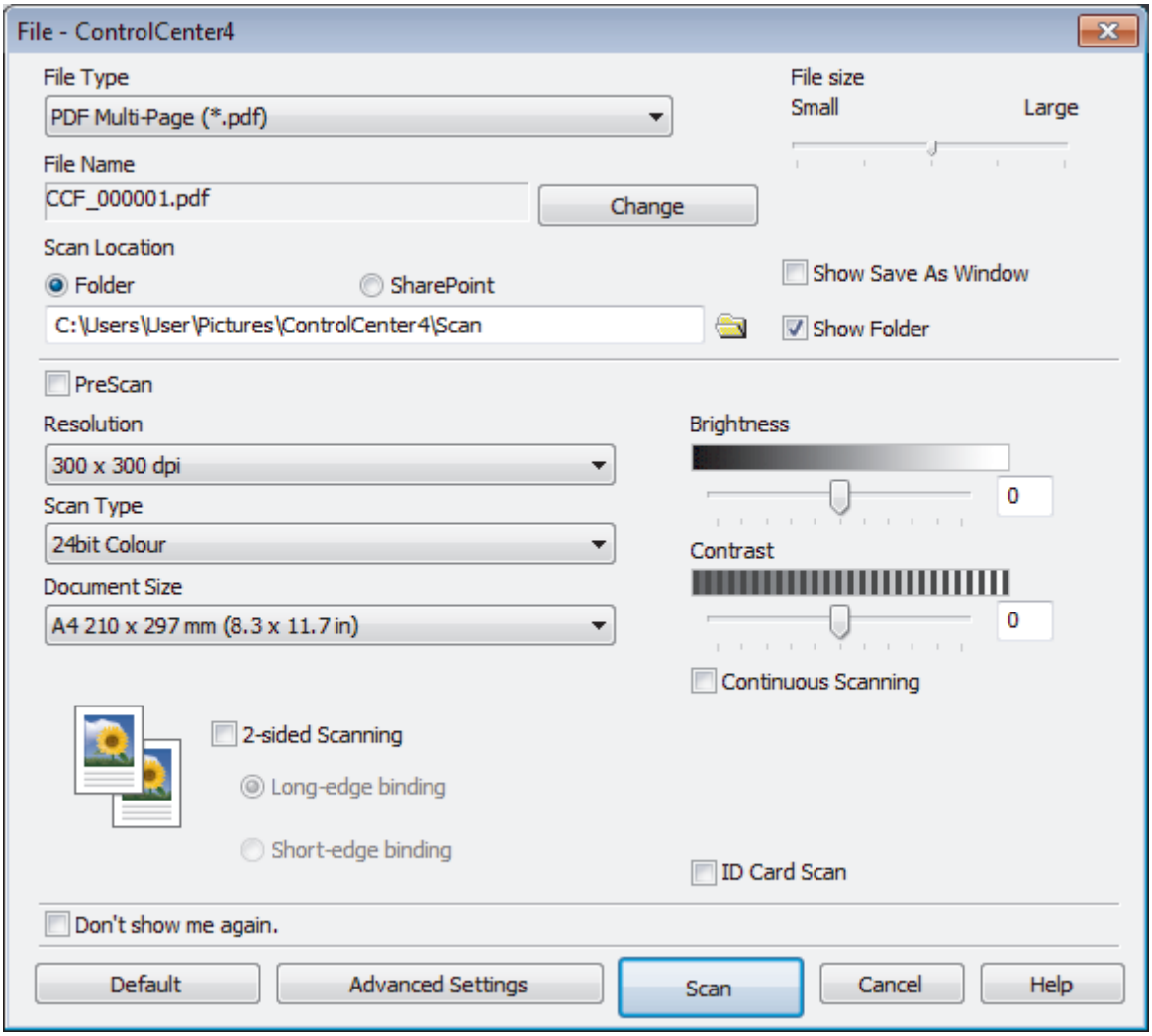

5. Click the **File Type** drop-down list, and then select a PDF file.

To save the document as a password-protected PDF, select **Secure PDF Single-Page (*.pdf)** or **Secure PDF Multi-Page (*.pdf)** from the **File Type** drop-down list, click , and then type the password..

6. Click the folder icon to browse and select the folder where you want to save your scanned documents.
7. Change the scan settings, such as file format, file name, resolution and colour, if needed.

To preview and configure the scanned image, select the **PreScan** check box.

8. Click **Scan**.

   The machine starts scanning. The file is saved in the folder you selected.

Related Information

- Scan Using ControlCenter4 Advanced Mode (Windows)

Scan Both Sides of a Document Automatically Using ControlCenter4 Advanced Mode (Windows)

Related Models: MFC-L5755DW/MFC-L5900DW/MFC-L6700DW/MFC-L6900DW

Select **Advanced Mode** as the mode setting for ControlCenter4.

1. Load documents in the ADF.

To scan both sides of a document automatically, you must use the ADF, not the flatbed scanner glass.

2. Click the (**ControlCenter4**) icon in the task tray, and then click **Open**.
3. Click the **Scan** tab.

4. Click the button for the setting you want to change (**Image**, **OCR**, **E-mail**, or **File**).

   The scan settings dialog box appears.
5. Select the **2-sided Scanning** check box.
6. Select the **Long-edge binding** or **Short-edge binding** option, depending on the Original layout (see table for layout examples).

2-sided Scan setting	Original layout	Scan Result
Long-edge binding	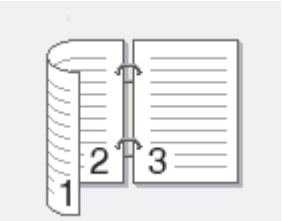	

2-sided Scan setting	Original layout	Scan Result
Short-edge binding	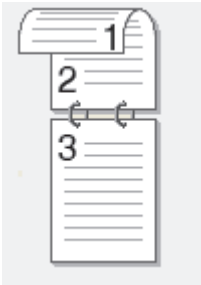	

7. Change the scan settings, such as file format, file name, destination file path, resolution and colour, if needed.

- To change the file name, click **Change**.
- To change **Destination Folder**, click the folder icon.

8. Click **Scan**.

   The machine starts scanning.

You have now changed the default settings for your selected Scan to action. These settings will be used the next time one of the scan options (**Image**, **OCR**, **E-mail**, or **File**) is selected for this action.

Related Information

- Scan Using ControlCenter4 Advanced Mode (Windows)

Scan Both Sides of an ID Card Using ControlCenter4 Advanced Mode (Windows)

Select **Advanced Mode** as the mode setting for ControlCenter4.

1. Place an ID card on the scanner glass.
2. Click the (**ControlCenter4**) icon in the task tray, and then click **Open**.
3. Click the **Scan** tab.

4. Click the **File** button.

   The scan settings dialog box appears.

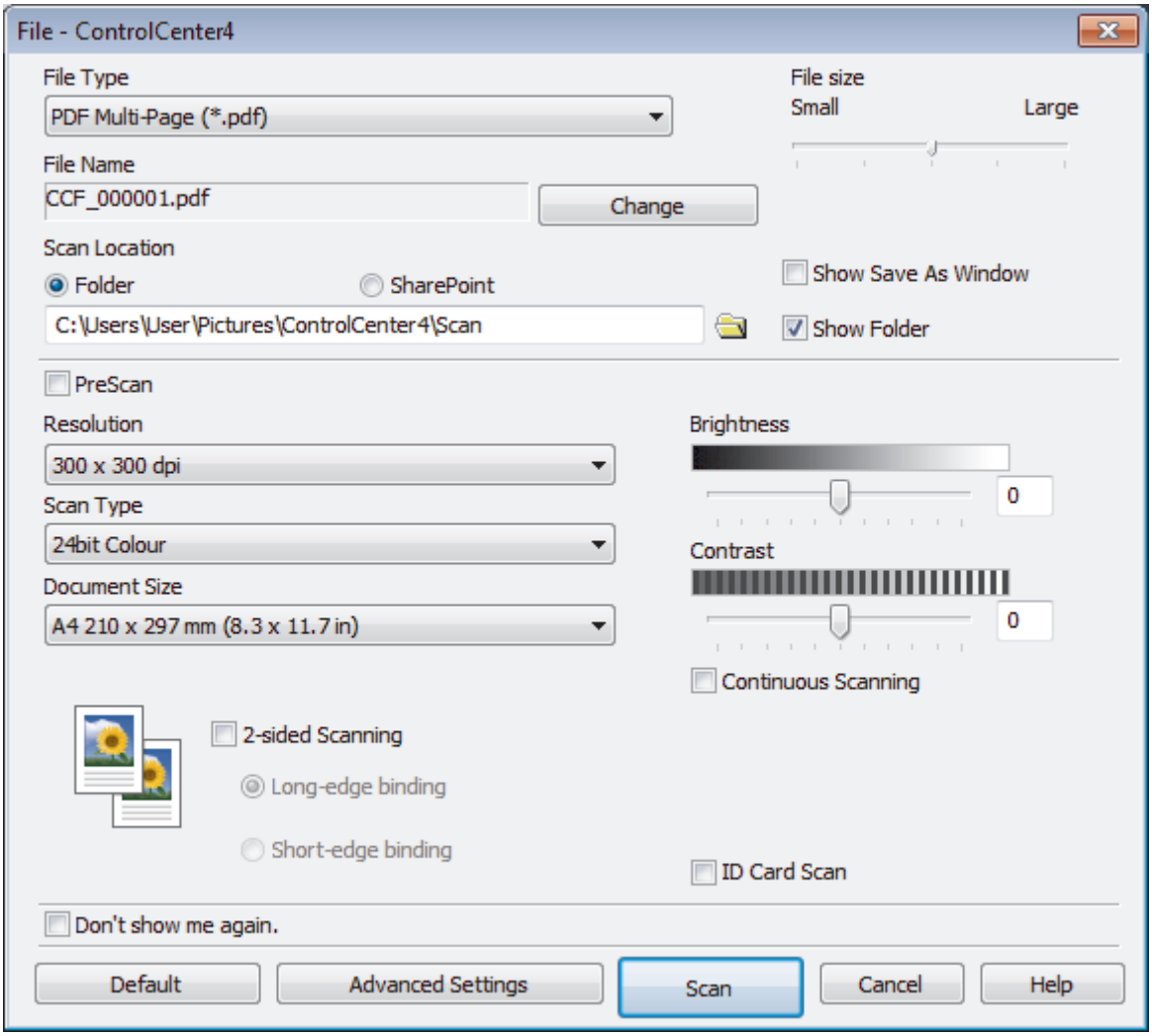

5. Select the **ID Card Scan** check box.

   The instruction dialog box appears.

6. Read the instructions on the screen, and then press **OK**.
7. Change the scan settings, such as file format, file name, scan location, resolution and colour, if needed.
8. Click **Scan**.

   The machine starts scanning one side of the identification card.

9. After the machine has scanned one side, turn over the identification card, and then click **Continue** to scan the other side.
10. Click **Finish**.

Related Information

- Scan Using ControlCenter4 Advanced Mode (Windows)

Scan to Email Attachment Using ControlCenter4 Advanced Mode (Windows)

Send a scanned document as an email attachment.

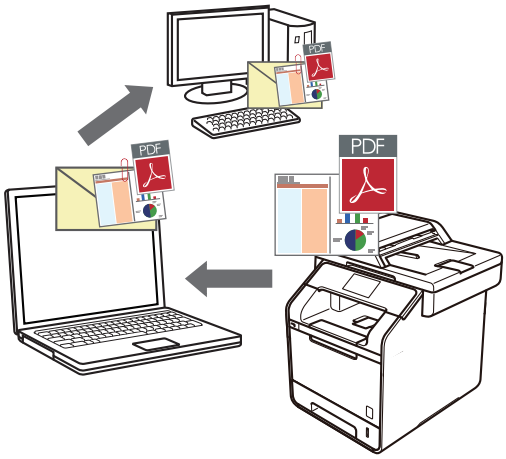

- Select **Advanced Mode** as the mode setting for ControlCenter4.
- The Scan to Email feature does not support Webmail services. Use the Scan to Image or Scan to File feature to scan a document or a picture, and then attach the scanned file to an email message.

The machine scans to your default email client.

1. Load your document.
2. Click the (**ControlCenter4**) icon in the task tray, and then click **Open**.
3. Click the **Scan** tab.

4. Click the **E-mail** button.

   The scan settings dialog box appears.

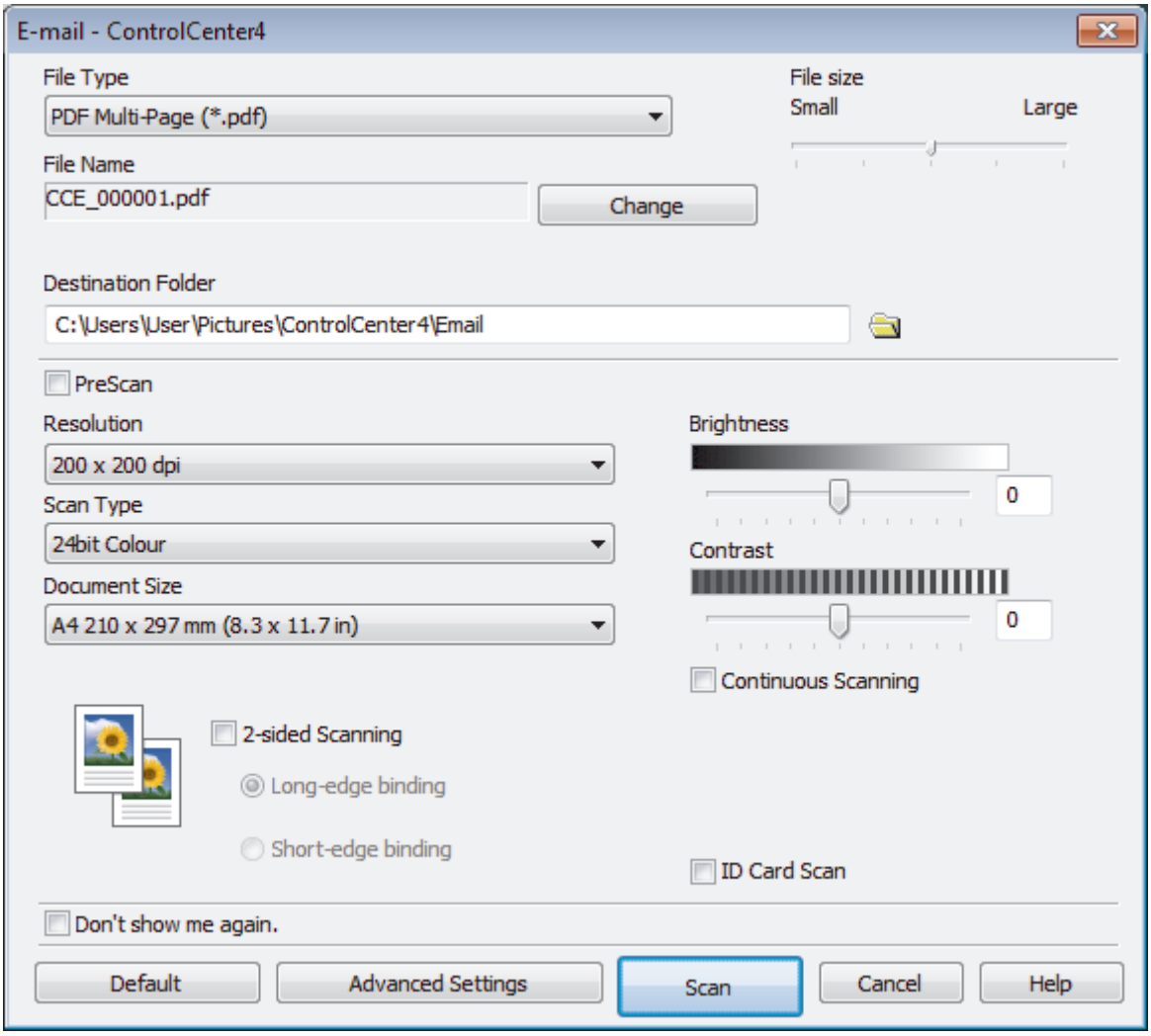

5. Change the scan settings, such as file format, file name, destination file path, resolution and colour, if needed.

- To change the file name, click **Change**.
- To change **Destination Folder**, click the folder icon.
- To preview and configure the scanned image, select the **PreScan** check box.

6. Click **Scan**.

   The machine starts scanning. Your default email application opens and the scanned image is attached to a new, blank email message.

Related Information

- Scan Using ControlCenter4 Advanced Mode (Windows)

Scan to an Editable Text File (OCR) Using ControlCenter4 Advanced Mode (Windows)

Your machine can convert characters in a scanned document to text using optical character recognition (OCR) technology. You can edit this text using your preferred text-editing application.

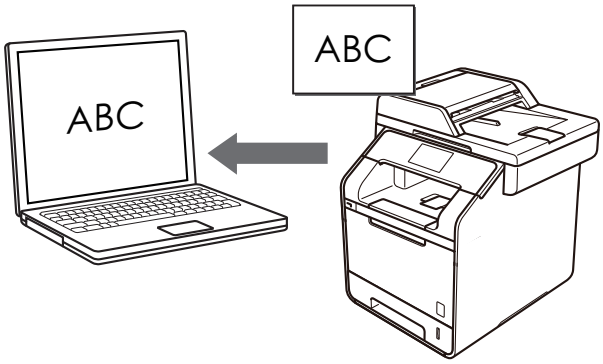

- Select **Advanced Mode** as the mode setting for ControlCenter4.

1. Load your document.
2. Click the (**ControlCenter4**) icon in the task tray, and then click **Open**.
3. Click the **Scan** tab.

4. Click the **OCR** button.

   The scan settings dialog box appears.

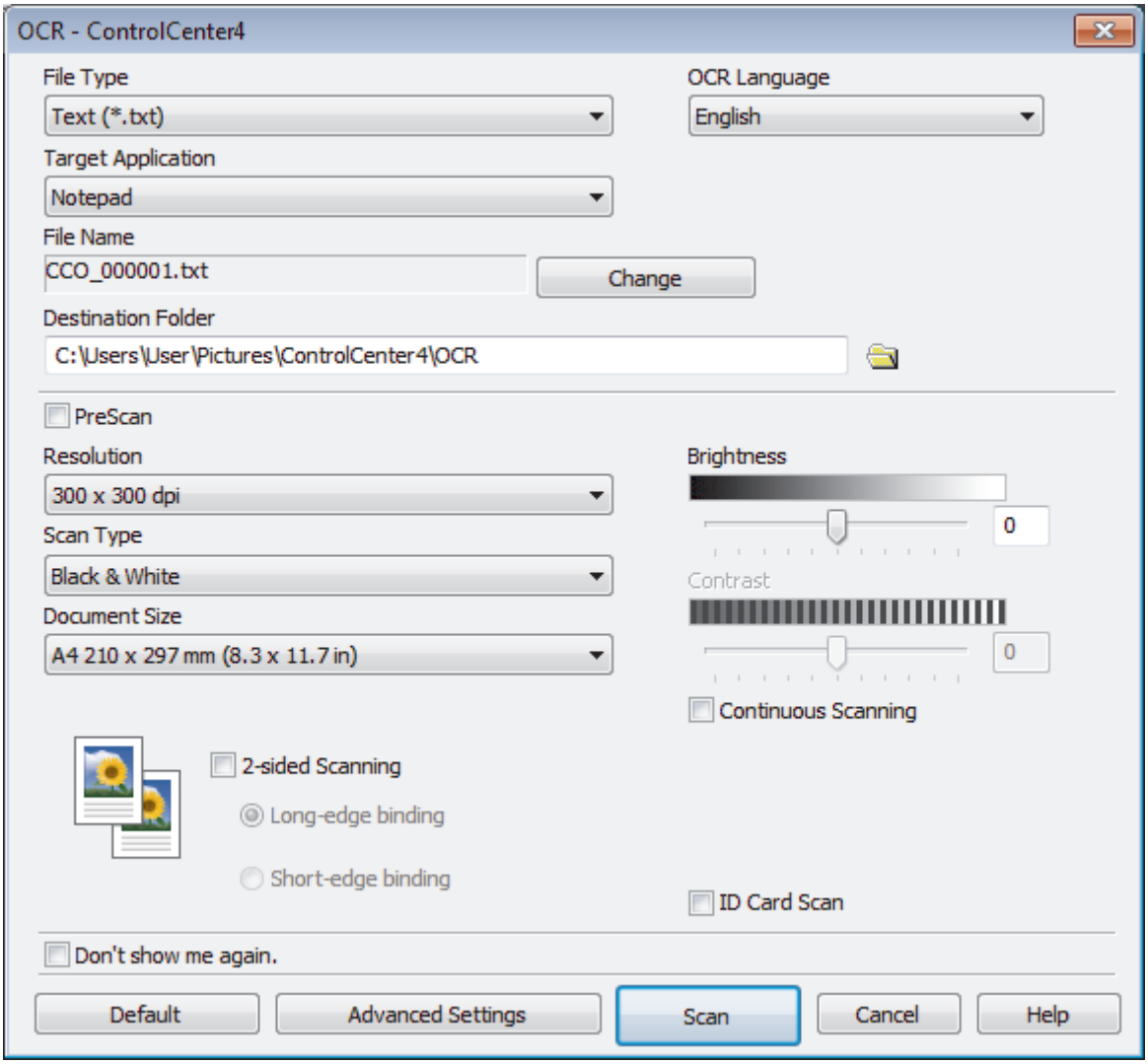

5. Change the scan settings, such as file format, file name, destination file path, resolution and colour, if needed.

- To change the file name, click **Change**.
- To change **Destination Folder**, click the folder icon.
- To preview and configure the scanned image, select the **PreScan** check box.

6. Click **Scan**.

   The machine scans the document, converts it to editable text, and then sends it to your default word processing application.

Related Information

- Scan Using ControlCenter4 Advanced Mode (Windows)

Scan Settings for ControlCenter4 Advanced Mode (Windows)

Settings	Applicable Features			
	Image	**OCR**	**E-mail**	**File**
File Type	Yes	Yes	Yes	Yes
Target Application	Yes	Yes	-	-
OCR Language	-	Yes	-	-
File Name	Yes	Yes	Yes	Yes
Scan Location or **Destination Folder**	Yes	Yes	Yes	Yes
Show Folder	-	-	-	Yes
Show Save As Window	-	-	-	Yes
File size	Yes	-	Yes	Yes
PreScan	Yes	Yes	Yes	Yes
Resolution	Yes	Yes	Yes	Yes
Scan Type	Yes	Yes	Yes	Yes
Document Size	Yes	Yes	Yes	Yes
Brightness	Yes	Yes	Yes	Yes
Contrast	Yes	Yes	Yes	Yes
Continuous Scanning	Yes	Yes	Yes	Yes
2-sided Scanning	Yes	Yes	Yes	Yes
ID Card Scan	Yes	Yes	Yes	Yes
Advanced Settings	Yes	Yes	Yes	Yes
Default	Yes	Yes	Yes	Yes

File Type

Select the file type you want to use for the scanned data.

For Image, Email and File

- **Windows Bitmap (*.bmp)**
- **JPEG (*.jpg)** (recommended for most users when scanning pictures)
- **TIFF Single-Page (*.tif)**
- **TIFF Multi-Page (*.tif)**
- **Portable Network Graphics (*.png)**
- **PDF Single-Page (*.pdf)** (recommended for scanning and sharing documents)
- **PDF Multi-Page (*.pdf)** (recommended for scanning and sharing documents)
- **PDF/A Single-Page (*.pdf)** (recommended for scanning and sharing documents)
- **PDF/A Multi-Page (*.pdf)** (recommended for scanning and sharing documents)
- **High Compression PDF Single-Page (*.pdf)**
- **High Compression PDF Multi-Page (*.pdf)**
- **Secure PDF Single-Page (*.pdf)**
- **Secure PDF Multi-Page (*.pdf)**
- **Searchable PDF Single-Page (*.pdf)**
- **Searchable PDF Multi-Page (*.pdf)**

- **XML Paper Specification (*.xps)** (the XML Paper Specification is available for Windows Vista, Windows 7 and Windows 8, and when using applications that support XML Paper Specification files)
- **Microsoft Office Word (*.docx)** (Available only for certain models)
- **Microsoft Office PowerPoint (*.pptx)** (Available only for certain models)

For OCR

- **HTML 3.2 (*.htm)**
- **HTML 4.0 (*.htm)**
- **Microsoft Excel 2003, XP (*.xls)**
- **RTF Word 2000 (*.rtf)**
- **WordPad (*.rtf)**
- **WordPerfect 9, 10 (*.wpd)**
- **Text (*.txt)**
- **Searchable PDF Single-Page (*.pdf)**
- **Searchable PDF Multi-Page (*.pdf)**

Target Application

Select the destination application from the drop-down list.

OCR Language

Set the OCR language to match the language of the scanned document's text.

File Name

Click **Change** to change the file name's prefix.

Scan Location

Select the **Folder** or **SharePoint** button to specify the destination where you would like to save your scanned documents.

Destination Folder

Click the folder icon to browse and select the folder where you want to save your scanned documents.

Show Folder

Select this option to automatically display the destination folder after scanning.

Show Save As Window

Select this option if you want to specify the scanned image's destination every time you scan.

File size

Adjust the data compression ratio of the scanned image. Change the file size by moving the **File size** slider to the right or left.

PreScan

Select **PreScan** to preview your image and crop unwanted portions before scanning.

Resolution

Select a scanning resolution from the **Resolution** drop-down list. Higher resolutions take more memory and transfer time, but produce a finer scanned image.

Scan Type

Select from a range of scan colour depths.

- **Auto**

  Use for any type of document. This mode automatically picks an appropriate colour depth for the document.
- **Black & White**

  Use for text or line art images.

- **Grey (Error Diffusion)**

  Use for photographic images or graphics. (Error Diffusion is a method for creating simulated grey images without using true grey dots. Black dots are put in a specific pattern to give a grey appearance.)

- **True Grey**

  Use for photographic images or graphics. This mode is more accurate because it uses up to 256 shades of grey.

- **24bit Colour**

  Use to create an image with the most accurate colour reproduction. This mode uses up to 16.8 million colours to scan the image, but it requires the most memory and has the longest transfer time.

Document Size

Select the exact size of your document from the **Document Size** drop-down list.

- If you select **1 to 2 (A4)**, the scanned image will be divided into two A5-size documents.

Brightness

Set the **Brightness** level by dragging the slider to the right or left to lighten or darken the image. If the scanned image is too light, set a lower brightness level and scan the document again. If the image is too dark, set a higher brightness level and scan the document again. You can also type a value into the field to set the **Brightness** level.

Contrast

Increase or decrease the **Contrast** level by moving the slider to the right or left. An increase emphasises dark and light areas of the image, while a decrease reveals more details in grey areas. You can also type a value into the field to set the **Contrast** level.

Continuous Scanning

Select this option to scan multiple pages from the scanner glass or ADF (Available only for certain models). After a page is scanned, select either continue scanning or finish. Use this method to scan more pages than the maximum ADF capacity.

2-sided Scanning

Select this check box to scan both sides of the document. When using the Automatic 2-sided Scan feature, you must select the **Long-edge binding** or **Short-edge binding** option, depending on the layout of your original, to make sure the data file you create appears correctly.

(MFC-L5755DW/MFC-L5900DW/MFC-L6700DW/MFC-L6900DW)

ID Card Scan

Select this check box to scan both sides of an identification card onto one page.

Advanced Settings

Configure advanced settings by clicking the **Advanced Settings** button in the Scan Settings dialog box.

- **Remove Background Colour**

  Remove the base colour of documents to make the scanned data more legible. Choose from three settings: high, medium, and low.

  (available only for the **Auto**, **True Grey** and **24bit Colour** options)

- **Skip Blank Page**

  Remove the document's blank pages from the scanning results.

  (MFC-L5755DW/MFC-L5900DW/MFC-L6700DW/MFC-L6900DW)

- **Display Scanning Results**

  Show the numbers of total pages saved and blank pages skipped on your computer screen.

  (MFC-L5755DW/MFC-L5900DW/MFC-L6700DW/MFC-L6900DW)

- **ADF Auto Deskew**

  When scanning the document from the ADF, the machine corrects skewing of the document automatically.

Default

Select this option to restore all settings to their factory setting values.

Related Information

- Scan Using ControlCenter4 Advanced Mode (Windows)

Scan Using Nuance™ PaperPort™ 14SE or Other Windows Applications

You can use the Nuance™ PaperPort™ 14SE application for scanning.

- To download the Nuance™ PaperPort™ 14SE application, click (**Brother Utilities**), select **Do More** in the left navigation bar, and then click **PaperPort**.
- Nuance™ PaperPort™ 14SE supports Windows XP Home (SP3 or greater), Windows XP Professional 32-bit (SP3 or greater), Windows Vista (SP2 or greater), Windows 7, Windows 8 and Windows 8.1.
- For detailed instructions on using each application, click the application's **Help** menu, and then click **Getting Started Guide** in the **Help** ribbon.

The instructions for scanning in these steps are for PaperPort™ 14SE. For other Windows applications, the steps will be similar. PaperPort™ 14SE supports both TWAIN and WIA drivers; the TWAIN driver (recommended) is used in these steps.

1. Load your document.
2. Start PaperPort™ 14SE.

   Do one of the following:

   - (Windows XP, Windows Vista and Windows 7)

     Using your computer, click **(Start)** > **All Programs** > **Nuance PaperPort 14** > **PaperPort**.
   - (Windows 8)

     Click (**PaperPort**).
3. Click the **Desktop** menu, and then click **Scan Settings** in the **Desktop** ribbon.

   The **Scan or Get Photo** panel appears on the left side of the screen.
4. Click **Select**.
5. From the available Scanners list, select **TWAIN: TW-Brother XXX-XXXX** or **TWAIN: TW-Brother XXX-XXXX LAN** (where MFC-XXXX is the model name of your machine). If you want to use the WIA driver, select the Brother driver that has "WIA" as the prefix.
6. Select the **Display scanner dialog box** check box in the **Scan or Get Photo** panel.
7. Click **Scan**.

   The Scanner Setup dialog box appears.

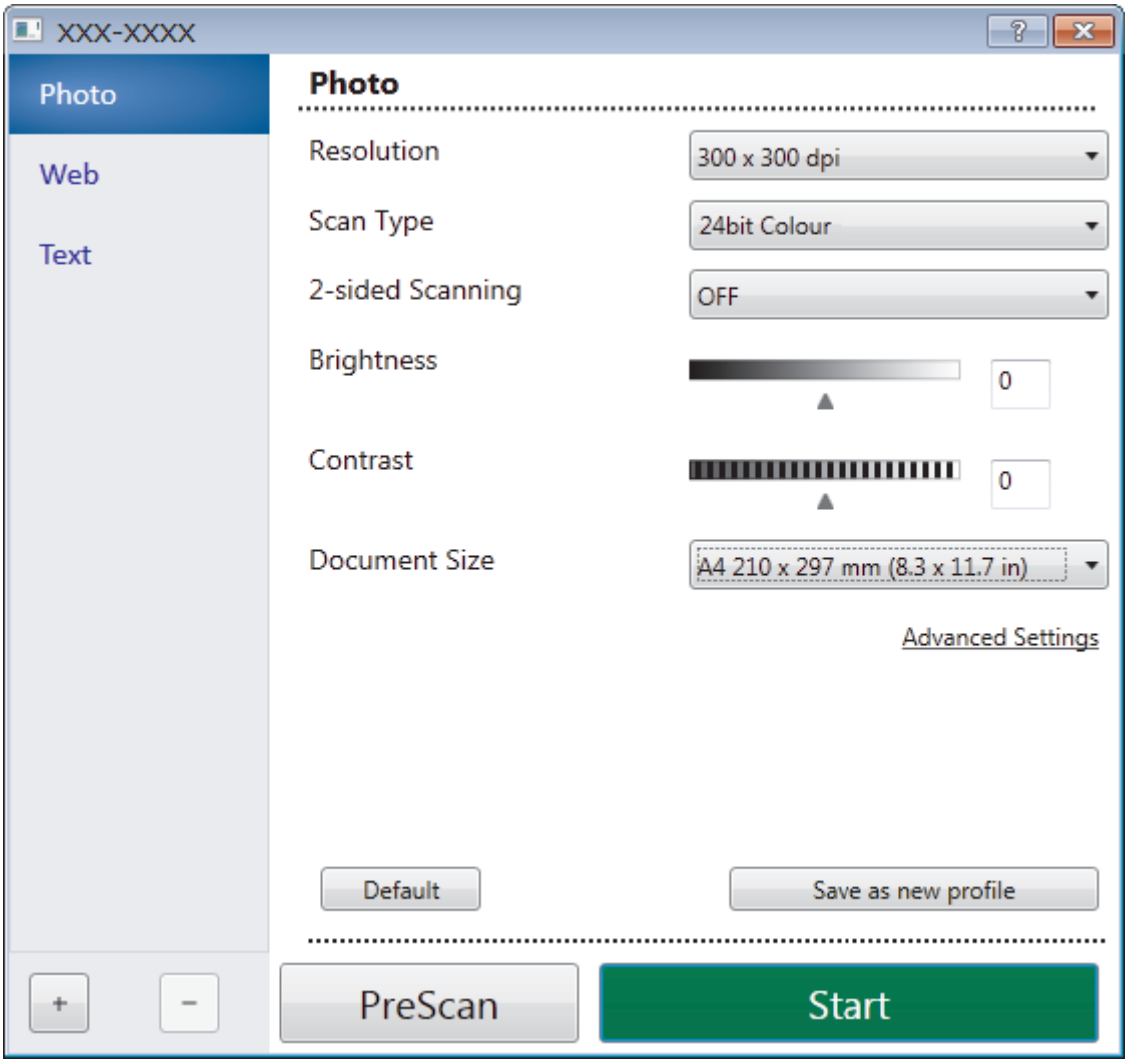

8. Adjust the settings in the Scanner Setup dialog box, if needed.
9. Click the **Document Size** drop-down list, and then select your document size.

To scan both sides of the document (MFC-L5755DW/MFC-L5900DW/MFC-L6700DW/MFC-L6900DW):
Automatic 2-sided scan is available only when using the ADF.
You cannot use PreScan to preview an image.

10. Click **PreScan** if you want to preview your image and crop unwanted portions before scanning.
11. Click **Start**.
    The machine starts scanning.

Related Information

- Scan from Your Computer (Windows)
- TWAIN Driver Settings (Windows)

TWAIN Driver Settings (Windows)

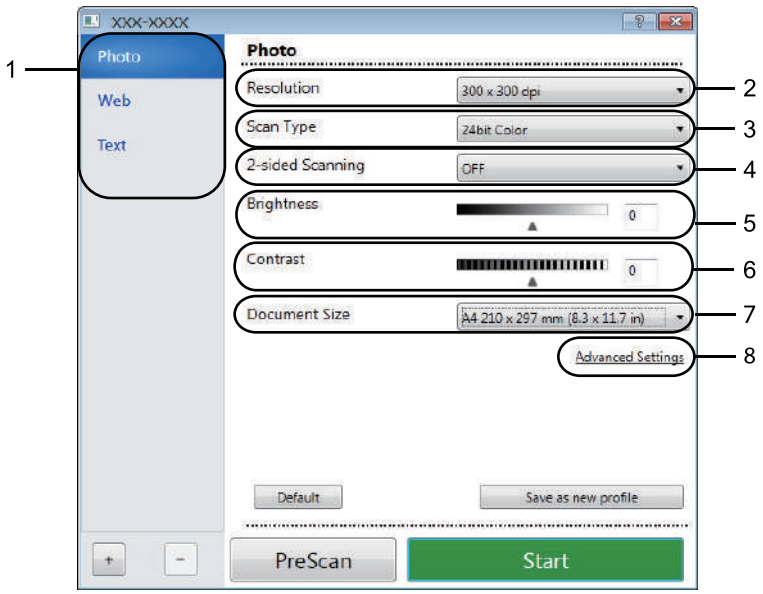

- Note that the item names and assignable values will vary depending on the machine.
- The **Brightness** option is available only when selecting the **Black & White**, **Grey (Error Diffusion)**, **True Grey**, or **24bit Colour** options from the **Scan Type** settings.
- The **Contrast** option is available only when selecting the **Grey (Error Diffusion)**, **True Grey**, or **24bit Colour** options from the **Scan Type** settings.

1. **Scan**

   Select the **Photo**, **Web**, or **Text** option depending on the type of document you want to scan.

Scan (Image Type)		Resolution	Scan Type
Photo	Use for scanning photo images.	300 x 300 dpi	**24bit Colour**
Web	Use for attaching the scanned image to web pages.	100 x 100 dpi	**24bit Colour**
Text	Use for scanning text documents.	200 x 200 dpi	**Black & White**

2. **Resolution**

   Select a scanning resolution from the **Resolution** drop-down list. Higher resolutions take more memory and transfer time, but produce a finer scanned image.

3. **Scan Type**

   Select from a range of scan colour depths.

   - **Black & White**

     Use for text or line art images.

   - **Grey (Error Diffusion)**

     Use for photographic images or graphics. (Error Diffusion is a method for creating simulated grey images without using true grey dots. Black dots are put in a specific pattern to give a grey appearance.)

   - **True Grey**

     Use for photographic images or graphics. This mode is more accurate because it uses up to 256 shades of grey.

- **24bit Colour**

  Use to create an image with the most accurate colour reproduction. This mode uses up to 16.8 million colours to scan the image, but it requires the most memory and has the longest transfer time.

4. **2-sided Scanning**

   Scan both sides of the document. When using the Automatic 2-sided Scan feature, you must select the **Long-edge binding** or **Short-edge binding** option from the **2-sided Scanning** drop-down list, so when you turn the pages, they are facing the way you want.

   (MFC-L5755DW/MFC-L5900DW/MFC-L6700DW/MFC-L6900DW)

5. **Brightness**

   Set the **Brightness** level by dragging the slider to the right or left to lighten or darken the image. If the scanned image is too light, set a lower brightness level and scan the document again. If the image is too dark, set a higher brightness level and scan the document again. You can also type a value in the field to set the brightness level.

6. **Contrast**

   Increase or decrease the **Contrast** level by moving the slider to the right or left. An increase emphasises dark and light areas of the image, while a decrease reveals more details in grey areas. You can also type a value in the field to set the contrast level.

7. **Document Size**

   Select the exact size of your document from a selection of preset scan sizes.

   If you select **Custom**, the **Custom Document Size** dialog box appears and you can specify the document size.

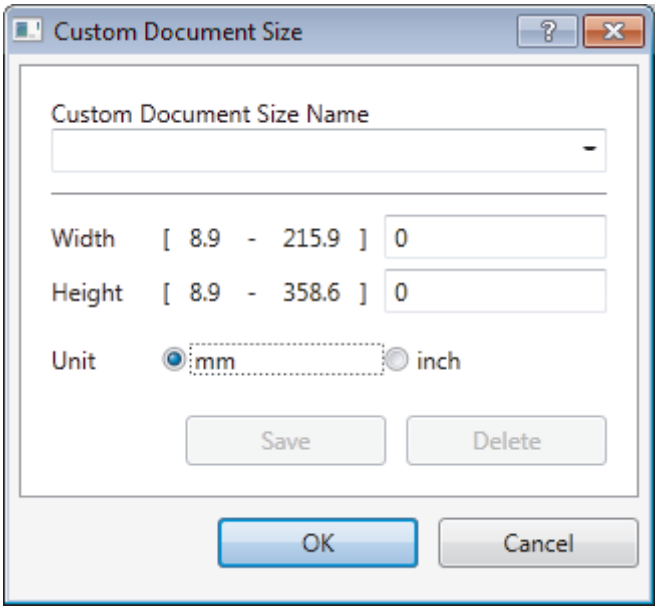

8. **Advanced Settings**

   Configure advanced settings by clicking the **Advanced Settings** button in the Scan Settings dialog box.

   - **Paper Detection**
     - **ADF Auto Deskew**

       Set the machine to correct document skewing automatically as the pages are scanned from the ADF.
     - **Skip Blank Page**

       Remove the document's blank pages from the scanning results.

       (MFC-L5755DW/MFC-L5900DW/MFC-L6700DW/MFC-L6900DW)
   - **Image Quality**
     - **Reduce Noise**

       Improve and enhance the quality of your scanned images with this selection. The **Reduce Noise** option is available when selecting the **24bit Colour** option and the **300 x 300 dpi**, **400 x 400 dpi**, or **600 x 600 dpi** scan resolution.
     - **Remove Background Color**

Remove the base colour of documents to make the scanned data more legible. Choose from three levels.

Related Information

- Scan Using Nuance™ PaperPort™ 14SE or Other Windows Applications

Scan Using Windows Photo Gallery or Windows Fax and Scan

Windows Photo Gallery or Windows Fax and Scan applications are other options that you can use for scanning.

- These applications use the WIA scanner driver.
- If you want to crop a portion of a page after pre-scanning the document, you must scan using the scanner glass (also called the flatbed).

1. Load your document.
2. Launch your scanning application. Do one of the following:
   - (Windows Photo Gallery)

     Click **File** > **Import from Camera or Scanner**.
   - (Windows Fax and Scan)

     Click **File** > **New** > **Scan**.
3. Select the scanner you want to use.
4. Click **Import** or **OK**.

   The **New Scan** dialog box appears.

   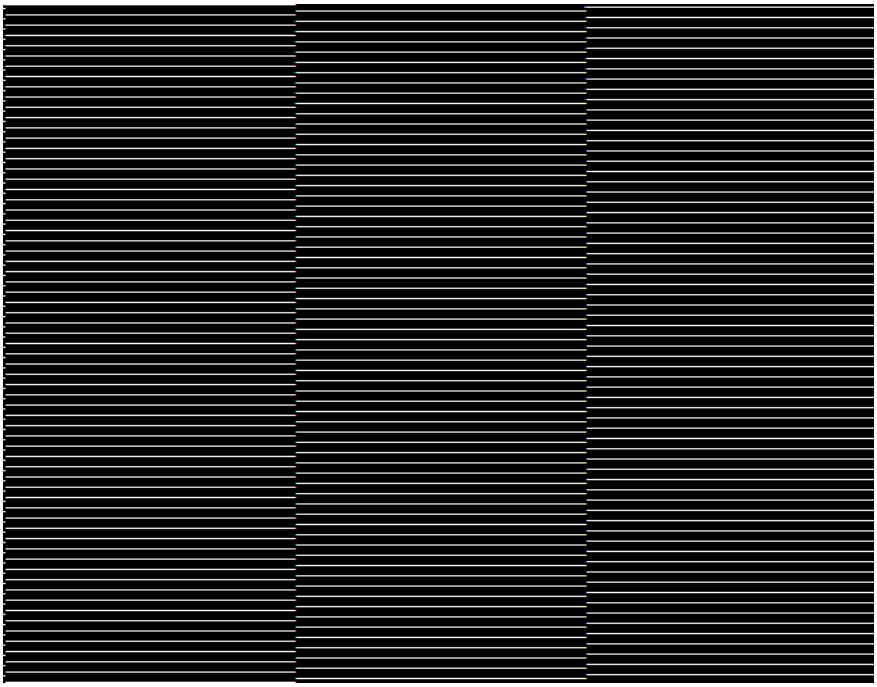
5. Adjust the settings in the Scanner Setup dialog box, if needed.

   The scanner resolution can be set to a maximum of 1200 dpi. If you want to scan at higher resolutions, use the **Scanner Utility** software of **Brother Utilities**.

   If your machine supports 2-sided Scan and you want to scan both sides of your document, select **Feeder (Scan both sides)** as **Source**.
6. Click **Scan**.

   The machine starts scanning the document.

Related Information

- Scan from Your Computer (Windows)
- WIA Driver Settings (Windows)

WIA Driver Settings (Windows)

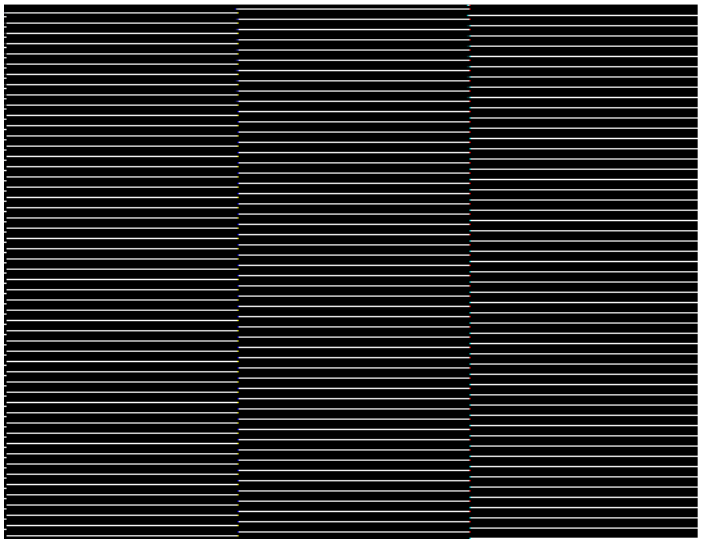

Paper source

Select the **Document Feeder** or **Flatbed** option from the drop-down list.

Picture Type (Image Type)

Select **Color picture**, **Grayscale picture**, **Black and white picture or text**, or **Custom Settings** for the type of document you want to scan.

To change advanced settings, click the **Adjust the quality of the scanned picture** link.

Page size

The **Page size** option is available if you select the **Document Feeder** as the **Paper source** option.

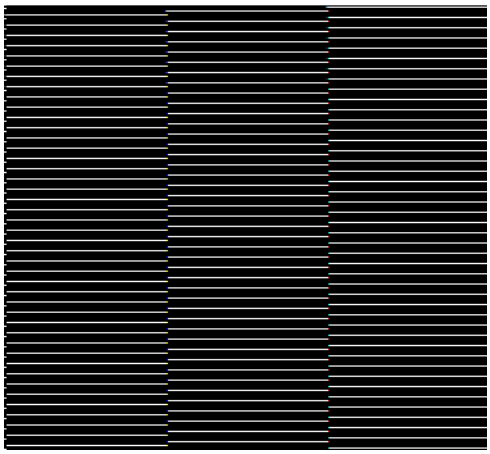

Brightness

Set the **Brightness** level by dragging the slider to the right or left to lighten or darken the image. If the scanned image is too light, set a lower brightness level and scan the document again. If the image is too dark, set a higher brightness level and scan the document again.

Contrast

Increase or decrease the **Contrast** level by moving the slider to the right or left. An increase emphasises dark and light areas of the image, while a decrease reveals more details in grey areas. You can also type a value in the field to set the contrast level.

Resolution (DPI)

Select a scanning resolution from the **Resolution (DPI)** list. Higher resolutions take more memory and transfer time, but produce a finer scanned image.

Related Information

- Scan Using Windows Photo Gallery or Windows Fax and Scan

Scan from Your Computer (Mac)

There are several ways you can use your Mac to scan photos and documents on your Brother machine. Use the software applications provided by Brother or your favourite scanning application.

- Scan Using ControlCenter2 (Mac)
- Scan Using TWAIN-Compliant Applications (Mac)

Scan Using ControlCenter2 (Mac)

Use Brother's ControlCenter software to scan photos and save them as JPEGs, PDFs, or other file formats.

- Scan Using ControlCenter2 (Mac)
- Save Scanned Data to a Folder as a PDF File Using ControlCenter2 (Mac)
- Scan Both Sides of a Document Automatically Using ControlCenter2 (Mac)
- Scan Both Sides of an ID Card Using ControlCenter2 (Mac)
- Scan to Email Attachment Using ControlCenter2 (Mac)
- Scan to an Editable Text File (OCR) Using ControlCenter2 (Mac)

Scan Using ControlCenter2 (Mac)

Send scanned photos or graphics directly to your computer.

1. Load your document.
2. In the **Finder** menu bar, click **Go** > **Applications** > **Brother**, and then double-click the (**ControlCenter**) icon.

   The **ControlCenter2** screen appears.
3. Click the **SCAN** tab.

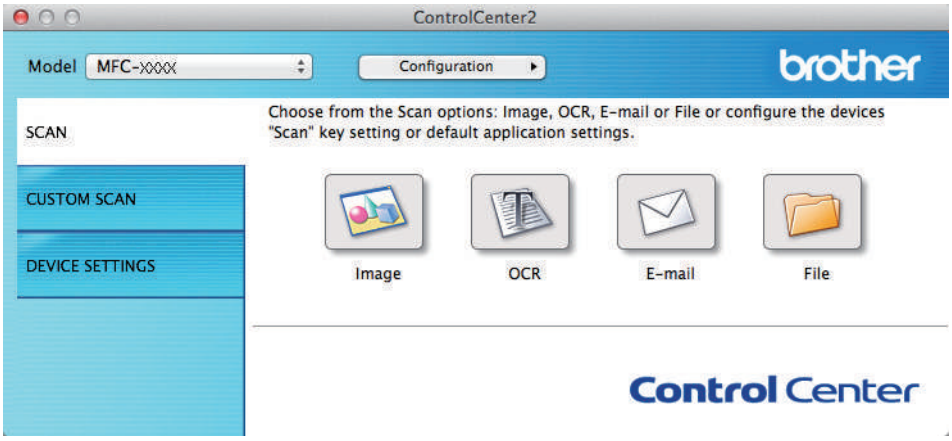

4. Click the **Image** button.

   The scan settings dialog box appears.

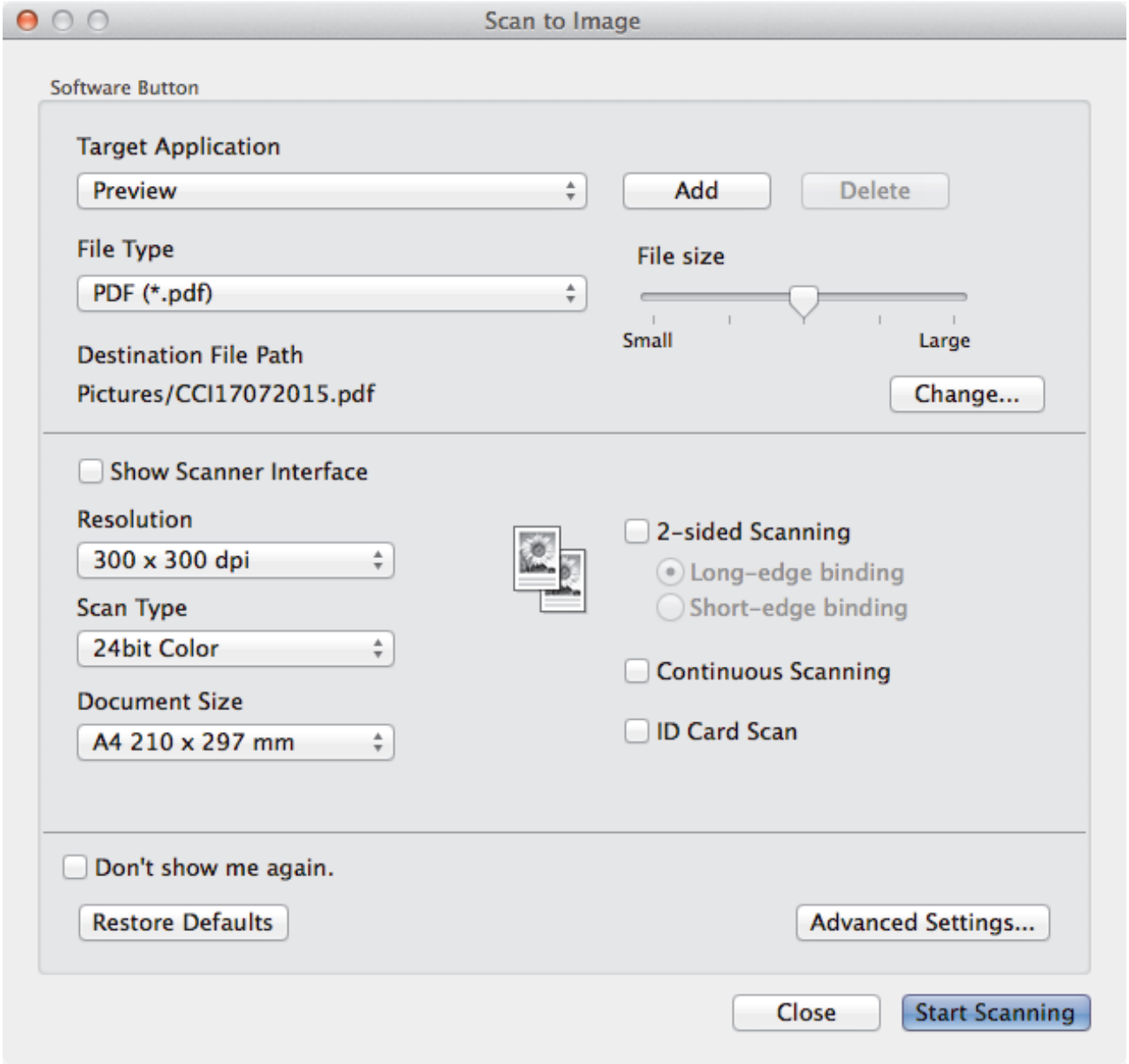

5. Change the scan settings, such as file format, file name, destination file path, resolution and colour, if needed.

To change the file name or destination file path, click **Change**.

6. Click the **Start Scanning** button.

   The machine starts scanning. The scanned image opens in the application you have selected.

Related Information

- Scan Using ControlCenter2 (Mac)

Save Scanned Data to a Folder as a PDF File Using ControlCenter2 (Mac)

1. Load your document.
2. In the **Finder** menu bar, click **Go** > **Applications** > **Brother**, and then double-click the (**ControlCenter**) icon.
   The **ControlCenter2** screen appears.
3. Click the **SCAN** tab.

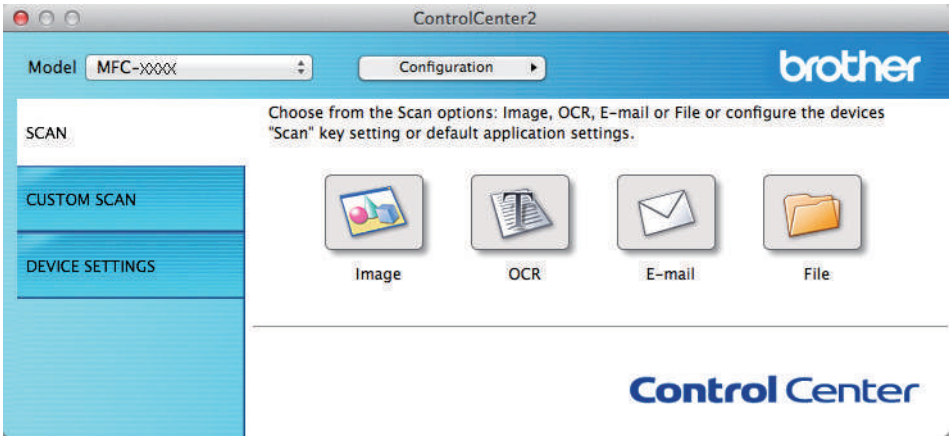

4. Click the **File** button.
   The scan settings dialog box appears.

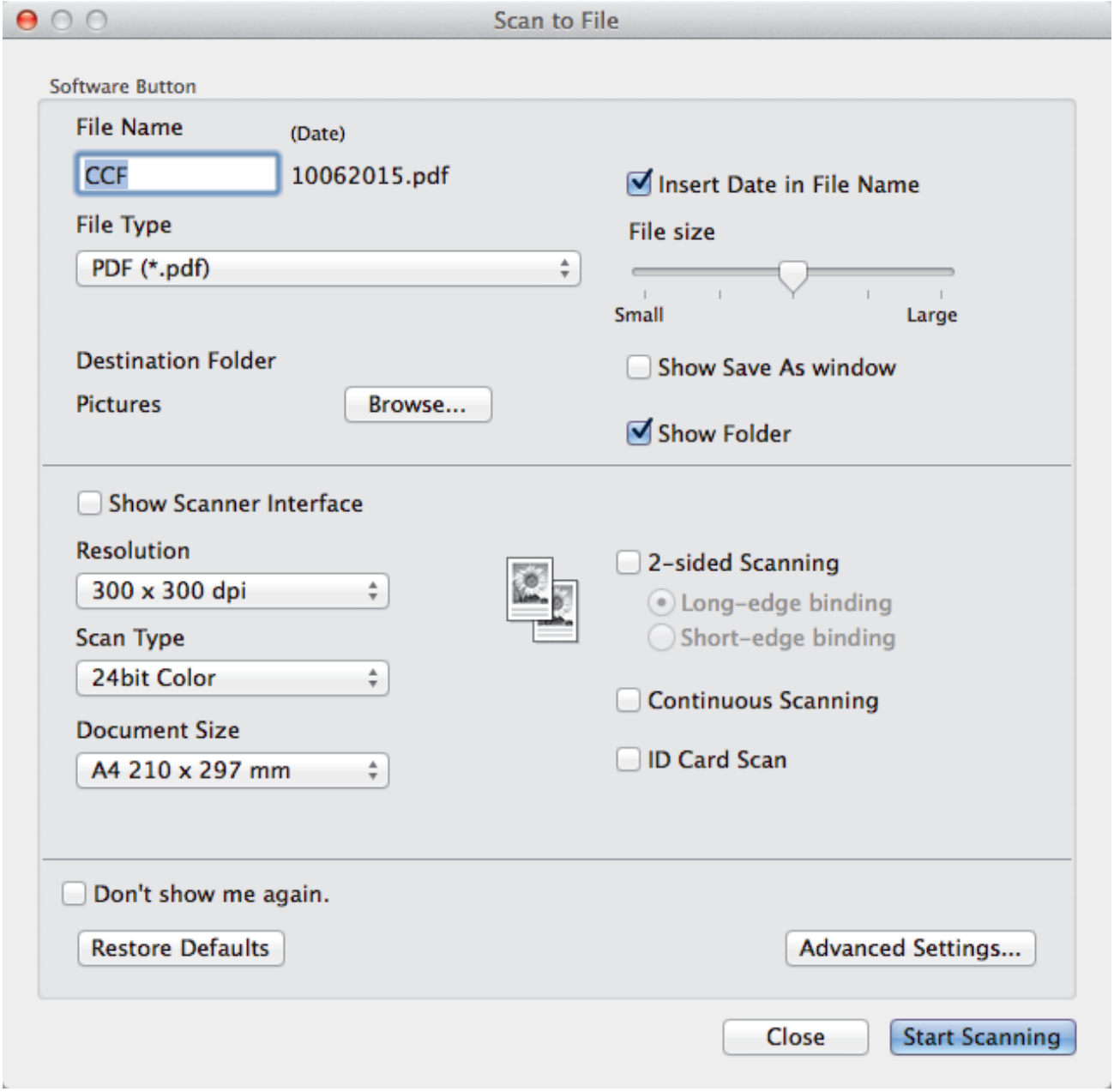

5. Click the **File Type** pop-up menu, and then select **PDF (*.pdf)**.

To save the document as a password-protected PDF, select **Secure PDF (*.pdf)** from the **File Type** pop-up menu, type your password in the **Password** and **Re-type Password** fields, and then click **OK**.

6. Change the scan settings, such as file name, destination folder, resolution and colour, if needed.
7. Click the **Start Scanning** button.

   The machine starts scanning. The file will be saved in the folder you selected.

Related Information

- Scan Using ControlCenter2 (Mac)

Scan Both Sides of a Document Automatically Using ControlCenter2 (Mac)

Related Models: MFC-L5755DW/MFC-L5900DW/MFC-L6700DW/MFC-L6900DW

1. Load documents in the ADF.

   To scan both sides of a document automatically, you must use the ADF, not the flatbed scanner glass.

2. In the **Finder** menu bar, click **Go** > **Applications** > **Brother**, and then double-click the (**ControlCenter**) icon.

   The **ControlCenter2** screen appears.

3. Click the **SCAN** tab.

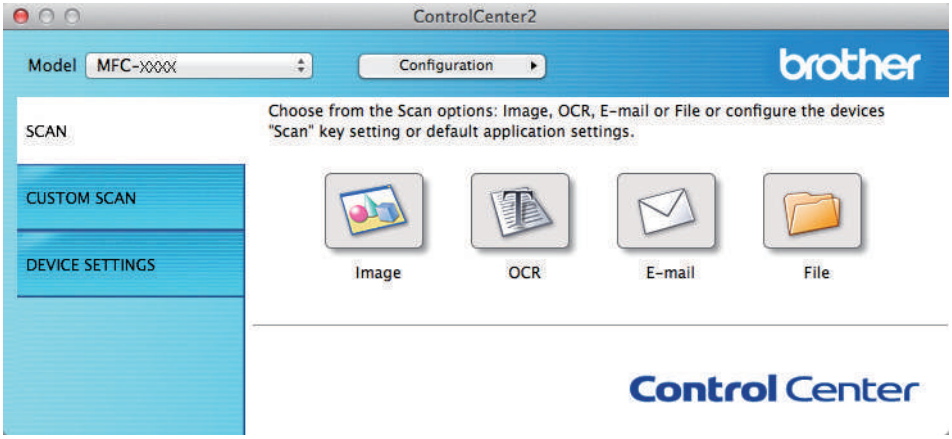

4. Click the scan type button (**Image**, **OCR**, **E-mail**, or **File**) you want to use.

   The scan settings dialog box appears.

5. Select the **2-sided Scanning** check box.
6. Select the **Long-edge binding** or **Short-edge binding** option, depending on the Original layout (see table for layout examples).

2-sided Scan setting	Original layout	Scan Result
Long-edge binding	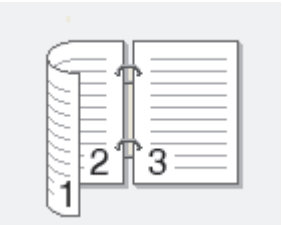	
Short-edge binding	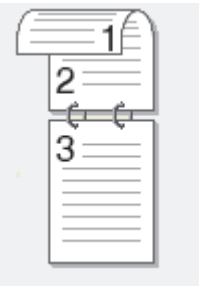	

7. Configure other settings, if needed.
8. Click the **Start Scanning** button.

   The machine starts scanning.

You have now changed the default settings for your selected Scan to action. These settings will be used the next time this scan type (**Image**, **OCR**, **E-mail**, or **File**) is clicked for this action.

Related Information

- Scan Using ControlCenter2 (Mac)

Scan Both Sides of an ID Card Using ControlCenter2 (Mac)

1. Place an ID card on the scanner glass.
2. In the **Finder** menu bar, click **Go** > **Applications** > **Brother**, and then double-click the (**ControlCenter**) icon.
   The **ControlCenter2** screen appears.
3. Click the **SCAN** tab.

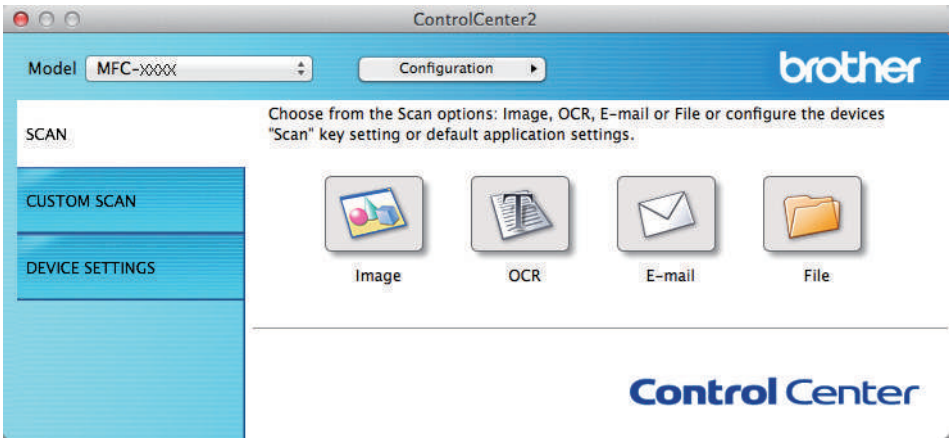

4. Click the **File** button.
   The scan settings dialog box appears.

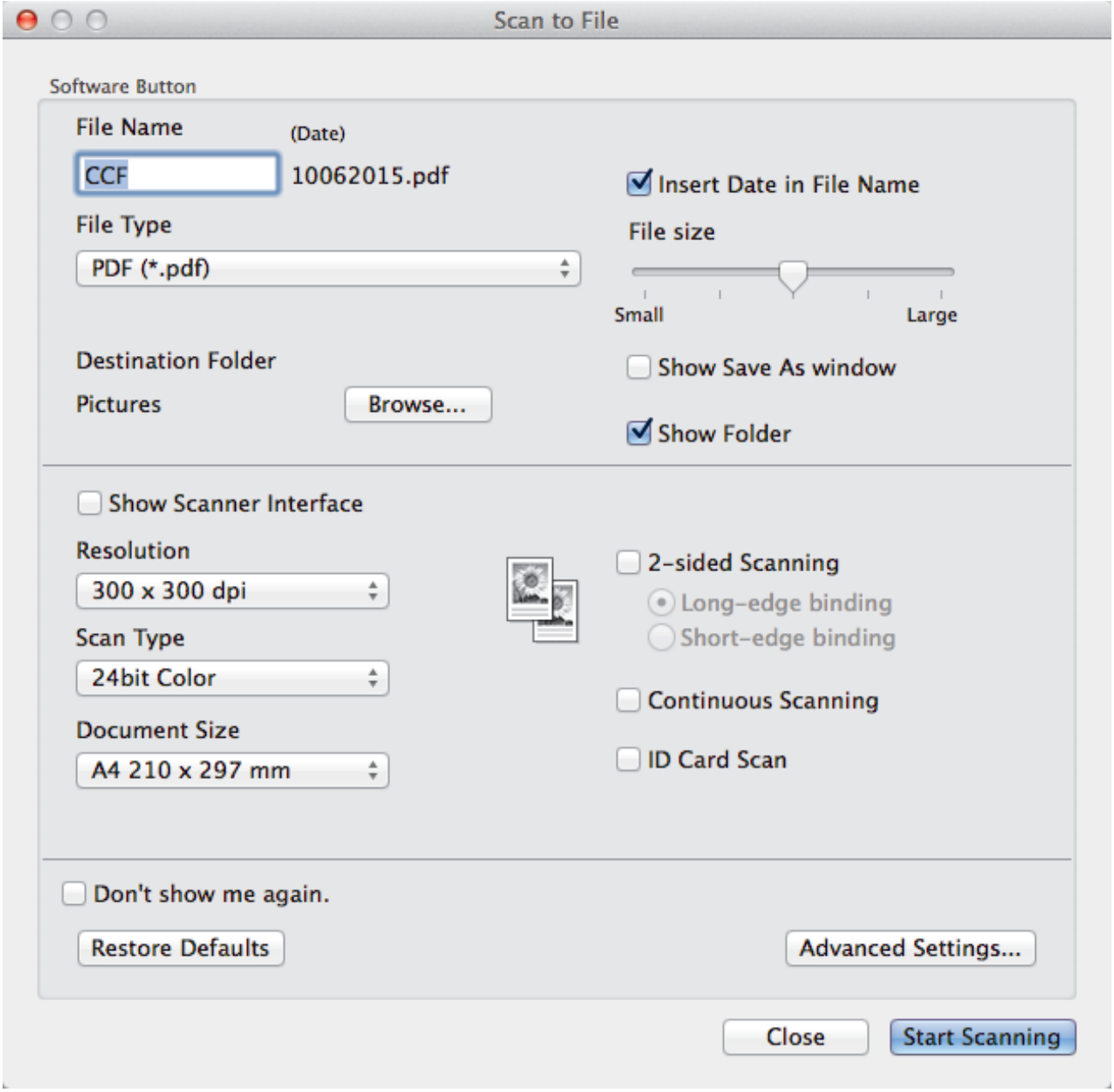

5. Select the **ID Card Scan** check box.
   The instruction dialog box appears.
6. Read the instructions on the screen, and then press **OK**.
7. Configure other settings, if needed.
8. Click the **Start Scanning** button.
   The machine starts scanning one side of the identification card.
9. After the machine has scanned one side, turn over the identification card, and then click **Continue** to scan the other side.
10. Click **Finish**.

Related Information

- Scan Using ControlCenter2 (Mac)

Scan to Email Attachment Using ControlCenter2 (Mac)

Send a scanned document as an email attachment.

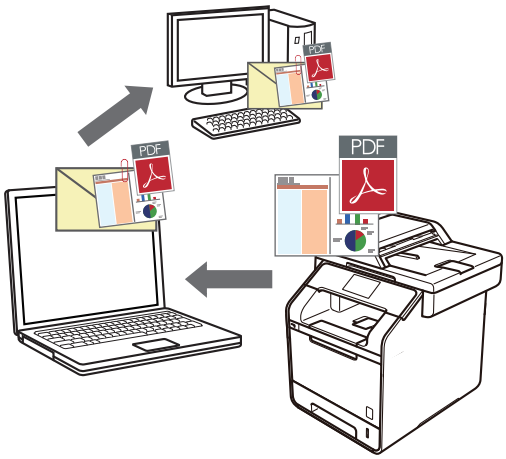

The Scan to Email feature does not support Webmail services. Use the Scan to Image or Scan to File feature to scan a document or a picture, and then attach the scanned file to an email message.

1. Load your document.
2. In the **Finder** menu bar, click **Go** > **Applications** > **Brother**, and then double-click the (**ControlCenter**) icon.

   The **ControlCenter2** screen appears.
3. Click the **SCAN** tab.

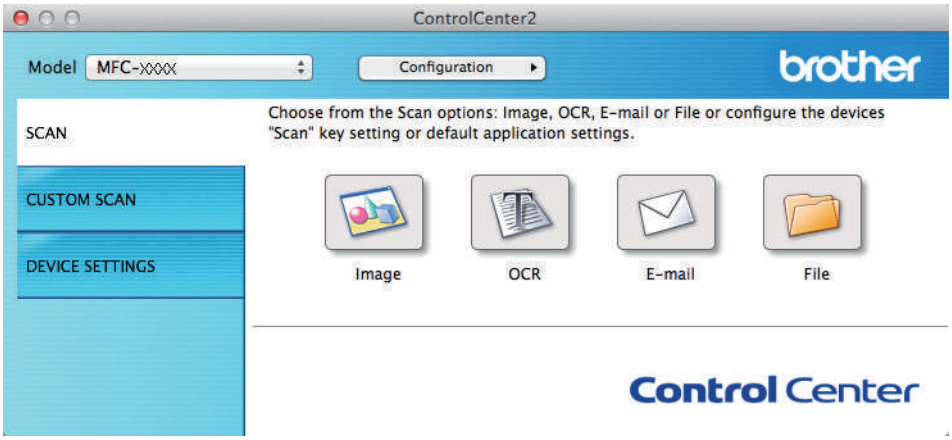

4. Click the **E-mail** button.

   The scan settings dialog box appears.

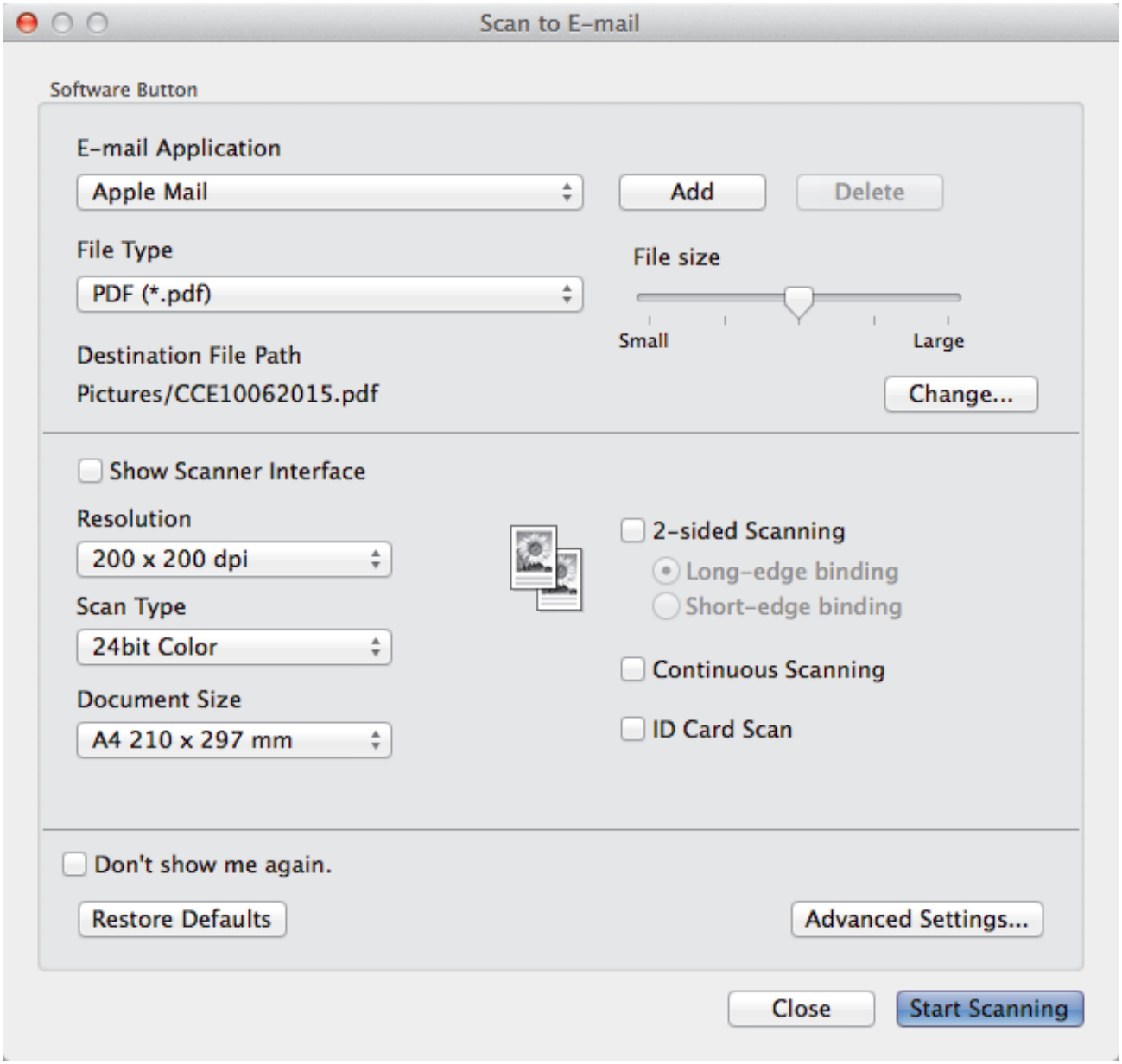

5. Change the scan settings, such as file format, file name, destination file path, resolution and colour, if needed.

To change the file name or destination file path, click **Change**.

6. Click the **Start Scanning** button.

   The machine starts scanning. Your default email application opens and the scanned image is attached to a new, blank email.

Related Information

- Scan Using ControlCenter2 (Mac)

Scan to an Editable Text File (OCR) Using ControlCenter2 (Mac)

Your machine can convert characters in a scanned document to text using optical character recognition (OCR) technology. You can edit this text using your preferred text-editing application.

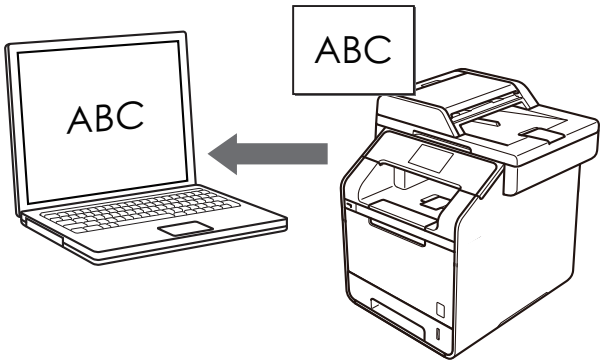

The Scan to OCR feature is available for certain languages.

1. Load your document.
2. In the **Finder** menu bar, click **Go** > **Applications** > **Brother**, and then double-click the (**ControlCenter**) icon.
   The **ControlCenter2** screen appears.
3. Click the **SCAN** tab.

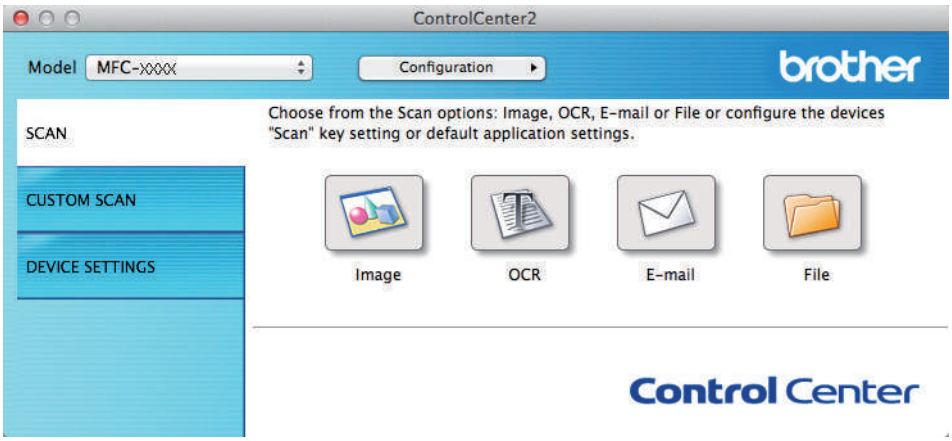

4. Click the **OCR** button.
   The scan settings dialog box appears.

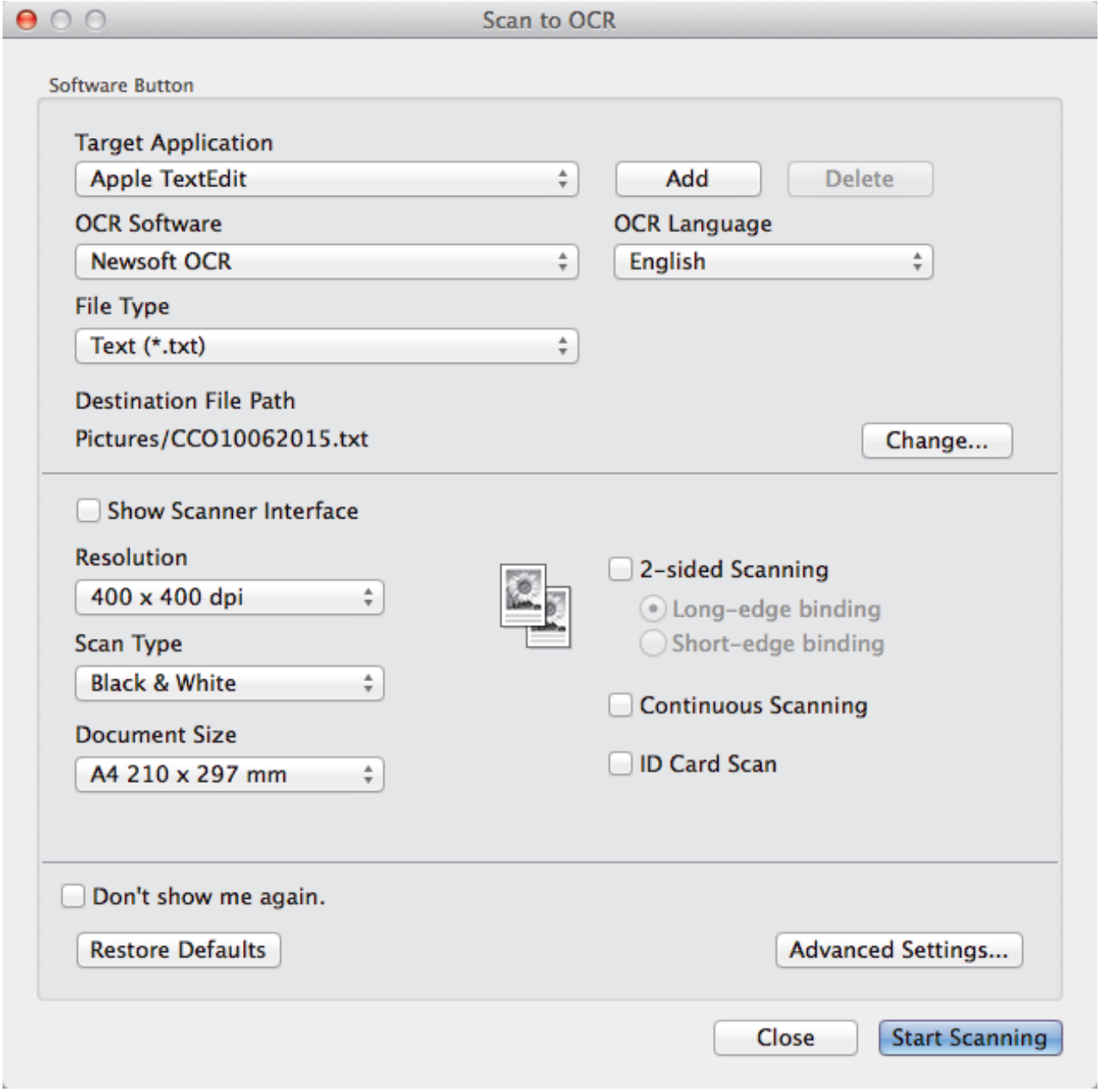

5. Change the scan settings, such as file format, file name, destination file path, resolution and colour, if needed.

To change the file name or destination file path, click **Change**.

6. Click the **Start Scanning** button.

   The machine scans the document, converts it to editable text, and then sends it to your default word processing application.

Related Information

- Scan Using ControlCenter2 (Mac)

Scan Using TWAIN-Compliant Applications (Mac)

You can also scan using TWAIN-compliant applications. For more information about the scanning procedure, see the manual for your application.

To use Brother TWAIN Driver, go to your model's **Downloads** page on the Brother Solutions Center at support.brother.com and download **Scanner Driver**.

1. Start your graphics application, and then select the scan operation.

   The scanner setup dialog box appears.

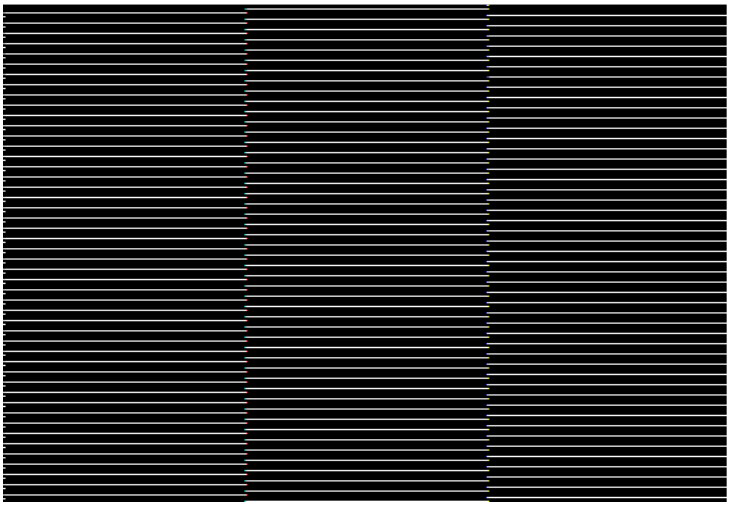

2. Change the scan settings, such as **Resolution**, **Scan Type**, or **Adjust Image**, if needed.
3. Click the **Document Size** pop-up menu, and then select your document size.
4. Click the **PreScan** option to preview your image and crop unwanted portions before scanning.

- After you select a document size, adjust the scanning area by holding down the mouse button and dragging your mouse pointer over the portion you want to scan.
- To scan both sides of the document (MFC-L5755DW/MFC-L5900DW/MFC-L6700DW/MFC-L6900DW):

  Automatic 2-sided scan is available only when using the ADF.

  You cannot adjust the scanning area.

  You cannot use PreScan to preview an image.

5. Click **Start**.

   The machine starts scanning.

Related Information

- Scan from Your Computer (Mac)
- TWAIN Driver Settings (Mac)

TWAIN Driver Settings (Mac)

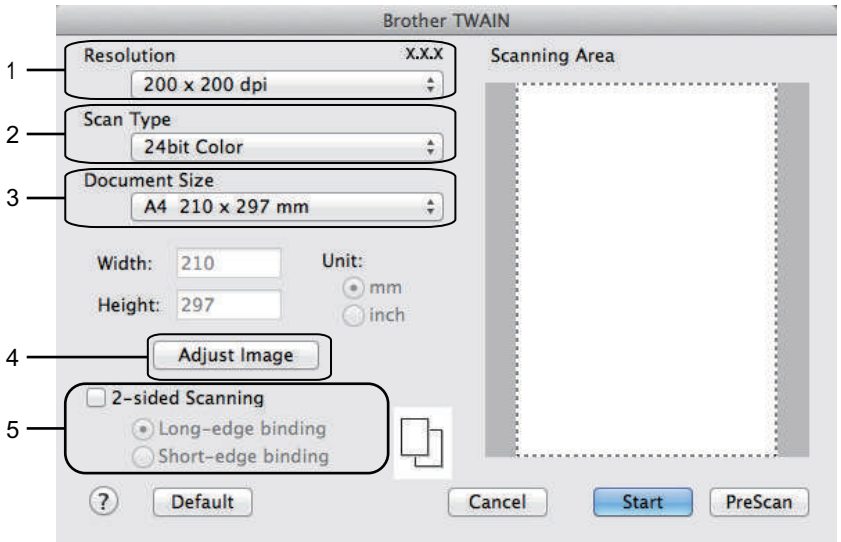

- Item names and assignable values will vary depending on the machine.
- The **Contrast** setting is available only when selecting **Gray (Error Diffusion)**, **True Gray**, or **24bit Color** from the **Scan Type** options.

1. **Resolution**

   Select a scanning resolution from the **Resolution** pop-up menu. Higher resolutions take more memory and transfer time, but produce a finer scanned image.

2. **Scan Type**

   Select from a range of scan colour depths.

   - **Black & White**

     Use for text or line art images.

   - **Gray (Error Diffusion)**

     Use for photographic images or graphics. (Error Diffusion is a method for creating simulated grey images without using true grey dots. Black dots are put in a specific pattern to give a grey appearance.)

   - **True Gray**

     Use for photographic images or graphics. This mode is more accurate because it uses up to 256 shades of grey.

   - **24bit Color**

     Use to create an image with the most accurate colour reproduction. This mode uses up to 16.8 million colours to scan the image, but it requires the most memory and has the longest transfer time.

3. **Document Size**

   Select the exact size of your document from a selection of preset scan sizes.

   - If you select **Custom**, you can specify the document size.

4. **Adjust Image**

   Click the **Adjust Image** button to adjust other image qualities.

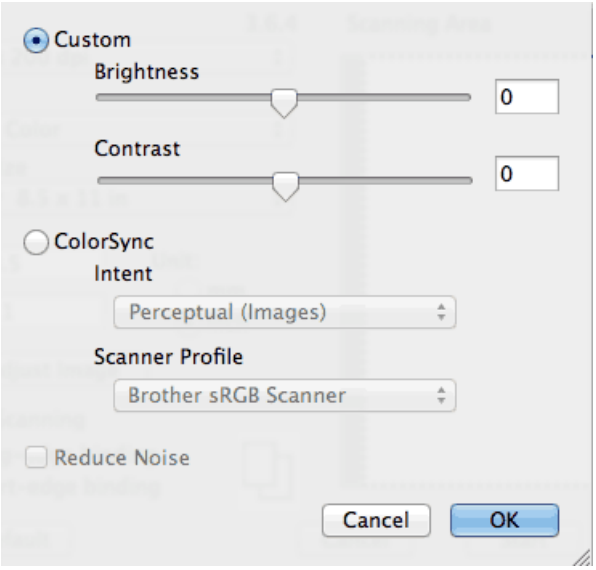

Brightness

Set the **Brightness** level by dragging the slider to the right or left to lighten or darken the image. If the scanned image is too light, set a lower brightness level and scan the document again. If the image is too dark, set a higher brightness level and scan the document again. You can also type a value in the box to set the brightness.

Contrast

Increase or decrease the **Contrast** level by moving the slider to the right or left. An increase emphasises dark and light areas of the image, while a decrease reveals more details in grey areas. You can also type a value in the box to set the contrast.

Reduce Noise

Improve and enhance the quality of your scanned images with this selection. The **Reduce Noise** option is available when selecting the **24bit Color** option and the **300 x 300 dpi**, **400 x 400 dpi**, or **600 x 600 dpi** scan resolutions.

5. **2-sided Scanning**

If you select this check box, the machine scans both sides of the document. When using the Automatic 2-sided Scan feature, you must select the **Long-edge binding** or **Short-edge binding** option, depending on the layout of your original, to make sure the created data file appears correctly.

(Available only for certain models)

Related Information

- Scan Using TWAIN-Compliant Applications (Mac)

Configure Scan Settings Using Web Based Management

- Set the Scan File Name Using Web Based Management
- Set the Scan Job Email Report Using Web Based Management

Set the Scan File Name Using Web Based Management

Set up a file name for scanned data using Web Based Management.

1. Start your web browser.

   Type "http://machine's IP address" in your browser's address bar (where "machine's IP address" is the IP address of the machine or the print server name). For example: http://192.168.1.2

   No password is required by default. If you have previously set a password, type it, and then press .
2. Click the **Scan** tab.
3. Click the **Scan File Name** menu in the left navigation bar.
4. Select the **File Name Style** from the drop-down list.
5. If you selected the option to include the date in **File Name Style** field, select the **Date** format from the drop-down list.
6. In the **Time** fields, select **On** to include the time information in the file name.
7. In the **Counter** field, select **Continuous** or **Reset after each job**.

When you select **Reset after each job**, duplication of file names may occur.

8. If you want to create a user-defined file name prefix, type a file name in the user-defined fields of each scan function.

Using the following characters: ?, /, \, or * may cause a sending error.

9. Click **Submit**.

Related Information

- Configure Scan Settings Using Web Based Management

Set the Scan Job Email Report Using Web Based Management

When you scan a document, the machine will send a scan job email report automatically to the registered email address.

1. Start your web browser.

   Type "http://machine's IP address" in your browser's address bar (where "machine's IP address" is the IP address of the machine or the print server name). For example: http://192.168.1.2

   No password is required by default. If you have previously set a password, type it, and then press .
2. Click the **Scan** tab.
3. Click the **Scan Job e-mail report** menu in the left navigation bar.
4. In the **Administrator Address** field, type the email address.
5. For the scan functions you want, select **On** to send a scan job email report.
6. Click **Submit**.

Related Information

- Configure Scan Settings Using Web Based Management

Copy

- Copy a Document
- Enlarge or Reduce Copied Images
- Make N in 1 Copies Using the Page Layout Feature
- Sort Copies
- Copy an ID Card
- Copy on Both Sides of the Paper (2-sided Copy)
- Copy Options

Copy a Document

1. Make sure you have loaded the correct size paper in the paper tray.
2. Do one of the following:
   - Place the document *face up* in the ADF.
     (If you are copying multiple pages, we recommend using the ADF.)

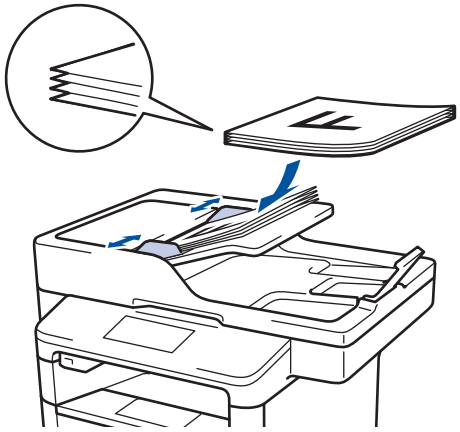

   - Place the document *face down* on the scanner glass.

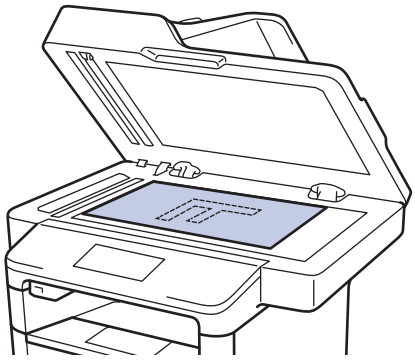

3. Press [Copy].
   The LCD displays:

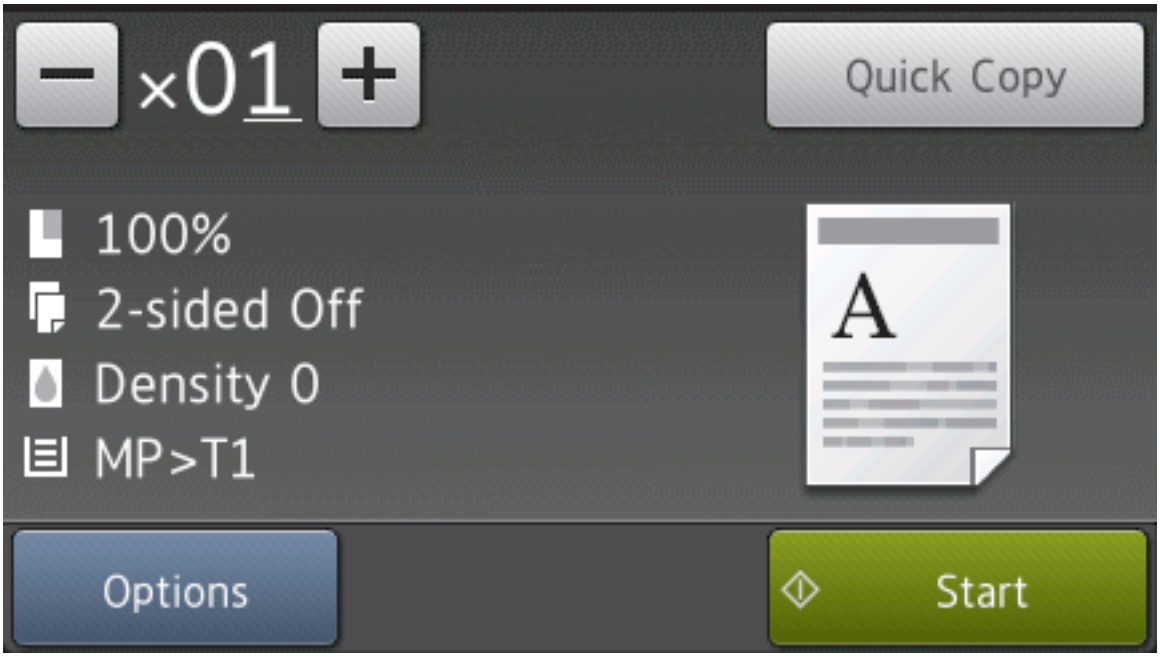

4. Change the copy settings, if needed.
   - ×01 (Number of copies)

Enter the number of copies in one of the following ways:

- Press + or − on the LCD.
- Press the numbers on the control panel.

- [Options]

  Press Options to change the copy settings for the next copy only.

  - When finished, press [OK].
  - After you have finished choosing new options, you can save them by pressing the [Save as Shortcut] button.

- [Quick Copy]

  Press Quick Copy to access the preset copy settings.

- Current setting indications

  Press the following icons to change these settings for the next copy only.

  - [Enlarge/Reduce]
  - [2-sided Copy]
  - [Density]
  - [Tray Use]

5. Press [Start].

To stop copying, press ✕.

Related Information

- Copy

Enlarge or Reduce Copied Images

Select an enlargement or reduction ratio to resize your copied data.

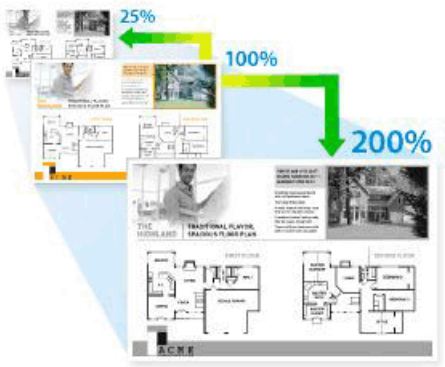

1. Load your document.
2. Press [Copy].
3. Enter the number of copies.
4. Press [Options] > [Enlarge/Reduce].
5. Swipe up or down or press ▲ or ▼ to display the available options, and then press the option you want.
6. Do one of the following:
   - If you select [Enlarge] or [Reduce], press the enlargement or reduction ratio you want to use.
   - If you select [Custom(25-400%)], press (backspace) to erase the displayed percentage, or press ◀ to move the cursor, and then enter an enlargement or reduction ratio from [25] to [400].
     Press [OK].
   - If you selected [100%] or [Auto], go to the next step.

   - [Auto] sets the machine to calculate the reduction ratio that best fits the size of paper.
   - [Auto] is only available when using the ADF.

7. When finished, press [OK].
8. Press [Start].

Related Information

- Copy

Make N in 1 Copies Using the Page Layout Feature

The N in 1 copy feature saves paper by copying two or four pages of your document onto one page of the copy.

If you are copying from the ADF, insert the documents face up in the direction as shown below:

- 2 in 1 (Portrait)

- 2 in 1 (Landscape)

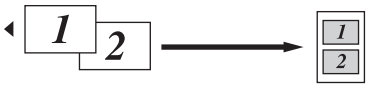

- 4 in 1 (Portrait)

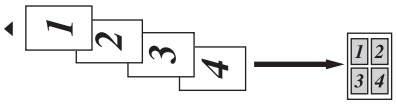

- 4 in 1 (Landscape)

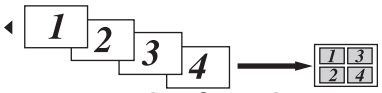

If you are copying from the scanner glass, place the document face down in the direction as shown below:

- 2 in 1 (Portrait)

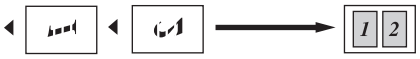

- 2 in 1 (Landscape)

- 4 in 1 (Portrait)

- 4 in 1 (Landscape)

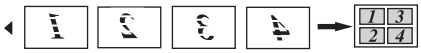

1. Load your document.
2. Press [Copy].

3. Enter the number of copies.
4. Press [Options] > [Page Layout].
5. Swipe up or down or press ▲ or ▼ to display the [2in1(Portrait)], [2in1(Landscape)], [4in1(Portrait)] or [4in1(Landscape)] option, and then press the option you want.
6. When finished, press [OK].
7. Press [Start].

   If you placed the document in the ADF, the machine scans the pages and starts printing.
8. **If you are using the scanner glass, repeat the following steps for each page of the document:**
   - Place the next page on the scanner glass, and then press [Continue] to scan the page.
   - After scanning all the pages, press [Finish].

Related Information

- Copy

Sort Copies

Sort multiple copies. Pages will be stacked in the order they are fed, that is: 1, 2, 3, and so on.

1. Load your document.
2. Press [Copy].
3. Enter the number of copies.
4. Press [Options] > [Stack/Sort] > [Sort].
5. When finished, press [OK].
6. Press [Start].

   If you placed the document in the ADF, the machine scans the pages and starts printing.
7. **If you are using the scanner glass, repeat the following steps for each page of the document:**
   - Place the next page on the scanner glass, and then press [Continue] to scan the page.
   - After scanning all the pages, press [Finish].

Related Information

- Copy

Copy an ID Card

Use the [2 in 1 ID Copy] feature to copy both sides of an identification card onto one page, keeping the original card size.

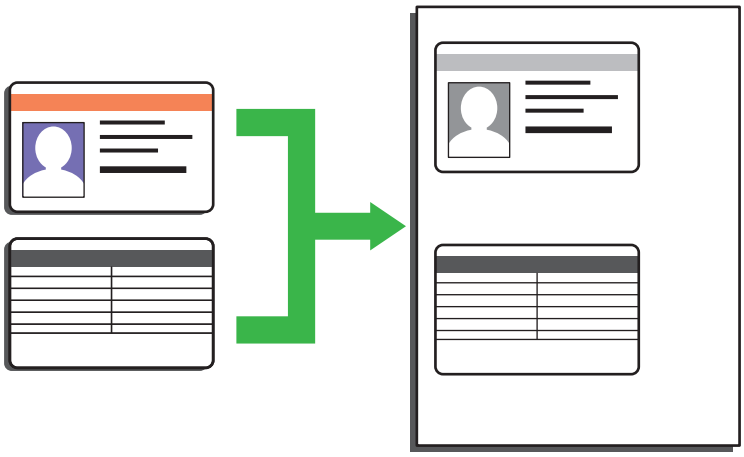

- You may copy an identification card only to the extent permitted under applicable laws. For more detailed information, see the *Product Safety Guide*.

1. Place your identification card *face down* near the upper left corner of the scanner glass.

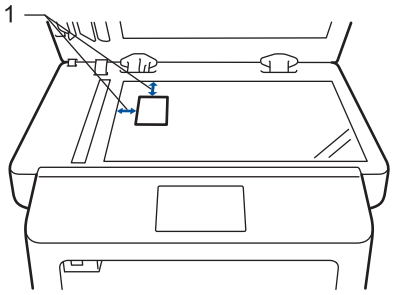

1: Distance 4.0 mm or greater (top, left)

2. Swipe left or right or press ◀ or ▶ to display the [2 in 1 ID Copy] option, and then press [2 in 1 ID Copy].
3. Enter the number of copies.
4. Press [Start].

   The machine scans one side of the identification card.
5. After the machine has scanned the first side, turn over the identification card.

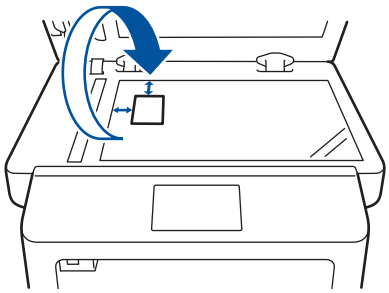

6. Press [Continue] to scan the other side.

Related Information

- Copy

Copy on Both Sides of the Paper (2-sided Copy)

Reduce the amount of paper you use by copying onto both sides of the paper.

- You must choose a 2-sided copy layout from the following options before you can start 2-sided copying.
- The layout of your original document determines which 2-sided copy layout you should choose.
- To use the automatic 2-sided copy feature, you must load your document in the ADF.
- When you manually make 2 sided copies from a 2-sided document, use the scanner glass.
- (For models without the lever on the 2-sided tray) Select A4 sized paper when using the 2-sided copy option.
- (For models with the lever on the 2-sided tray) Select A4, Letter, Legal, Mexico Legal, India Legal or Folio sized paper when using the 2-sided copy option.
- Make sure the 2-sided tray is set to the correct paper size. If it is not, the paper may not be fed correctly, resulting in a skewed printout or a paper jam.

Portrait

2–sided to 2–sided

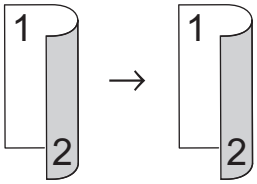

1–sided to 2–sided (Long Edge Flip)

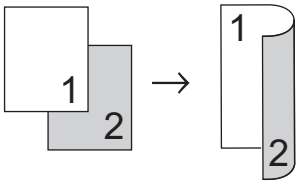

1–sided to 2–sided (Short Edge Flip)

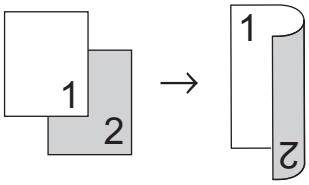

Landscape

2–sided to 2–sided

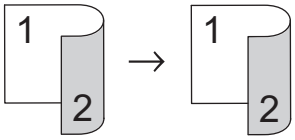

1–sided to 2–sided (Long Edge Flip)

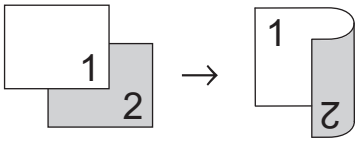

1–sided to 2–sided (Short Edge Flip)

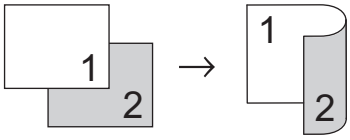

1. Load your document.
2. Press [Copy].
3. Enter the number of copies.
4. Press [Options] > [2-sided Copy].
5. Do one of the following:
   - (MFC-L5755DW/MFC-L5900DW/MFC-L6700DW/MFC-L6900DW)
     To make 2-sided copies of a 2-sided document automatically, press [2-sided⇒2-sided].

     Load your document in the ADF to use the automatic 2-sided copy feature.
   - (MFC-L5700DN)
     To make 2-sided copies of a 2-sided document manually, press [2-sided⇒2-sided].

     Use the scanner glass to make 2-sided copies of a 2-sided document manually.
   - To make 2-sided copies from a 1-sided document, follow these steps:
     a. To change the layout options, press [Layout], and then press [Long Edge Flip] or [Short Edge Flip].
     b. Press [1-sided⇒2-sided].
6. When finished, press [OK].
7. Press [Start].
   If you placed the document in the ADF, the machine scans the pages and starts printing.
8. **If you are using the scanner glass, repeat the following steps for each page of the document:**

   - For a 2-sided document, turn the sheet over along the long edge to scan the other side.

   - Place the next page on the scanner glass, and then press [Continue] to scan the page.
   - After scanning all the pages, press [Finish].

Related Information

- Copy

Copy Options

To change Copy settings, press [Options].

Menu selections	Options	
Quality	Select the copy quality for your type of document.	
Enlarge/Reduce	100%	-
	Enlarge	Select an enlargement ratio for the next copy.
	Reduce	Select a reduction ratio for the next copy.
	Auto	Adjusts the copy size to fit on the paper size you have set.
	Custom(25-400%)	Enter an enlargement or reduction ratio.
Density	Increase the density to make the text darker. Decrease the density to make the text lighter.	
Contrast	Increase the contrast to make an image clearer. Decrease the contrast to make an image more subdued.	
Stack/Sort	Select to stack or sort multiple copies. **Stack** 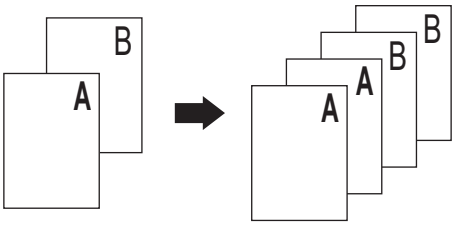 **Sort** 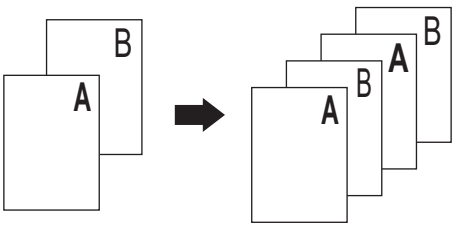	
Page Layout	Make N in 1 or 2 in 1 ID copies. **4 in1** 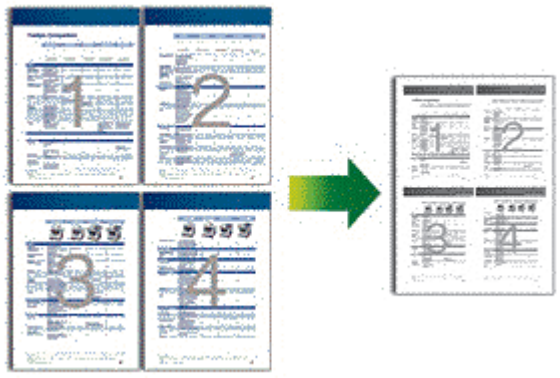	

Menu selections	Options
2-sided Copy	Select to copy on both sides of the paper. **1-sided → 2-sided** 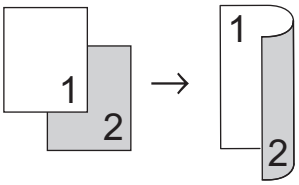 **2-sided → 2-sided** 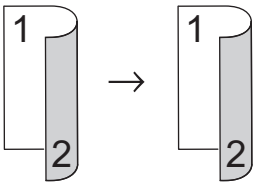 The available options will vary depending on your model.
2-sided Copy Page Layout (available only for certain settings)	Select long edge binding or short edge binding.
Tray Use	Select a paper tray for the next copy.
Save as Shortcut	Add the current settings as a shortcut.

Related Information

- Copy

Fax

- Send a Fax
- Receive a Fax
- Voice Operations and Fax Numbers
- Telephone Services and External Devices
- Fax Reports
- PC-FAX

Send a Fax

- Send a Fax
- Send a 2-sided Fax from the ADF
- Send a Fax Manually
- Send a Fax at the End of a Conversation
- Send the Same Fax to More than One Recipient (Broadcasting)
- Send a Fax in Real Time
- Send a Fax at a Specified Time (Delayed Fax)
- Add a Cover Page to Your Fax
- Cancel a Fax in Progress
- Check and Cancel a Pending Fax
- Fax Options

Send a Fax

Related Models: MFC-L5700DN/MFC-L5755DW/MFC-L5900DW/MFC-L6700DW/MFC-L6900DW

1. Do one of the following:
   - Place the document *face up* in the ADF.
     (If you are faxing multiple pages, we recommend using the ADF.)

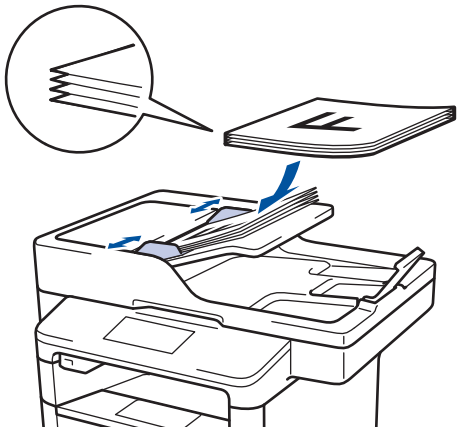

   - Place the document *face down* on the scanner glass.

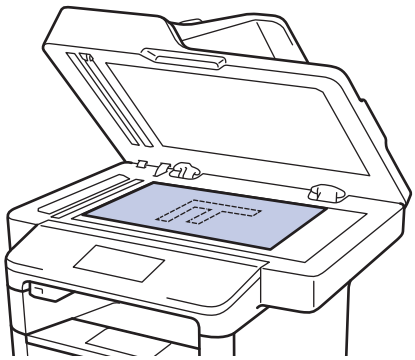

2. Press [Fax].
3. Enter the fax number.
   - **Using the dial pad**
     Press the digits to enter the fax number.

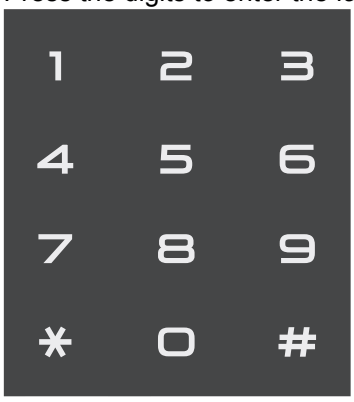

   - **Using the Address Book**
     Press [Address Book], and then do one of the following:
     - Swipe up or down or press ▲ or ▼ to display the number you want, and then press it.
     - Press [Search:], and then enter the name and press [OK]. Press the name you want to dial.

When finished, press [Apply].

- **Using the call history**

  Press [Call History], and then press the [Outgoing Call] option.

  Swipe up or down or press ▲ or ▼ to display the fax number you want, and then press it.

  To send a fax, press [Apply].

4. Press [Fax Start].

   The machine scans and sends the document.

   If you placed the document on the scanner glass, follow the instructions in the table.

Option	Description
Yes	To scan the next page, press the Yes option, and then place the next page on the scanner glass. Press OK to scan the page.
No	After you have scanned the last page, press the No option. The machine sends the document.

To stop faxing, press , and then press .

Related Information

- Send a Fax

Send a 2-sided Fax from the ADF

Related Models: MFC-L5755DW/MFC-L5900DW/MFC-L6700DW/MFC-L6900DW

You must select a 2-sided scanning format before sending a 2-sided fax. Select either Long Edge or Short Edge, depending on the layout of your document.

1. Load your document.
2. Press [Fax] > [Options] > [2-sided Fax].
3. Do one of the following:
   - If your document is flipped on the Long edge, press the [2-sided Scan: Long Edge] option.
   - If your document is flipped on the Short edge, press the [2-sided Scan: Short Edge] option.
4. Press [OK].
5. Enter the fax number.
6. Press [Fax Start].

Related Information

- Send a Fax

Send a Fax Manually

Related Models: MFC-L5700DN/MFC-L5755DW/MFC-L5900DW/MFC-L6700DW/MFC-L6900DW

Manual fax transmission lets you hear the dialling, ringing and fax-receiving tones while sending a fax.

1. Load your document.
2. Press [Fax].
3. Press [Hook] and listen for a dial tone.
4. Dial the fax number you want to call.
5. When you hear the fax tone, press [Fax Start].
   - If you are using the scanner glass, press [Send].

Related Information

- Send a Fax

Send a Fax at the End of a Conversation

Related Models: MFC-L5700DN/MFC-L5755DW/MFC-L5900DW/MFC-L6700DW/MFC-L6900DW

At the end of a conversation, you can send a fax to the other party before you both hang up.

1. Ask the other party to wait for fax tones (beeps) and then to press the Start or Send key before hanging up.
2. Load your document.
3. Press `[Fax Start]`.
   - If you are using the scanner glass, press `[Send]`.
4. Replace the handset of an external telephone.

Related Information

- Send a Fax

Send the Same Fax to More than One Recipient (Broadcasting)

Related Models: MFC-L5700DN/MFC-L5755DW/MFC-L5900DW/MFC-L6700DW/MFC-L6900DW

Use the Broadcasting feature to send the same fax to multiple fax numbers at the same time.

- The same broadcast can include Groups, Address Book numbers (One Touch Dial numbers and Speed Dial numbers in some models) and up to 50 manually dialled numbers.
- Touchscreen LCD models

  If you did not use any of the Address Book numbers for Groups, you can broadcast faxes to as many as 350 different numbers.
- Address Book numbers (One Touch Dial numbers and Speed Dial numbers in some models) must be stored in the machine's memory before they can be used in a broadcast.
- Group numbers must also be stored in the machine's memory before they can be used in a broadcast. Group numbers include many stored Address Book numbers (One Touch Dial numbers and Speed Dial numbers in some models) for easier dialling.

1. Load your document.
2. Press [Fax] > [Options] > [Broadcasting].
3. Press [Add Number].

   You can add numbers to the broadcast in the following ways:
   - Press [Add Number] and enter a number using the LCD.

     Press [OK].

     If you want to broadcast using an email address, press , enter the email address, and press [OK].

     (On certain models, you must download Internet Fax to use the Internet Fax feature and the Scan to Email server feature.)
   - Press [Add from Address book]. Swipe up or down or press ▲ or ▼ to display the number you want to add to the broadcast. Select the check boxes of the broadcast. After you select all the numbers you want, press [OK].
   - Press [Search in Address book]. Press the name and press [OK]. Press the name, and then press the number you want to add.
4. When finished, press [OK].
5. Press [Fax Start]. After the broadcast is finished, the machine will print a broadcast report to let you know the results.

- The machine's available memory will vary depending on the types of jobs in the memory and the numbers used for broadcasting. If you broadcast to the maximum number available, you will not be able to use dual access and delayed fax.
- If the [Out of Memory] message appears, press to stop the job. If more than one page has been scanned, press [Send Now] to send the portion that is in the machine's memory.

Related Information

- Send a Fax
- Cancel a Broadcast in Progress

Cancel a Broadcast in Progress

Related Models: MFC-L5700DN/MFC-L5755DW/MFC-L5900DW/MFC-L6700DW/MFC-L6900DW

While broadcasting you can cancel the fax currently being sent or the whole broadcast job.

1. Press .
2. Press .
3. Do one of the following:
   - To cancel the entire broadcast, press `[Entire Broadcast]`.
   - To cancel the current job, press the name or number being dialled on the LCD.
   - To exit without cancelling, press .

Related Information

- Send the Same Fax to More than One Recipient (Broadcasting)

Send a Fax in Real Time

Related Models: MFC-L5700DN/MFC-L5755DW/MFC-L5900DW/MFC-L6700DW/MFC-L6900DW

When sending a fax, the machine scans the document into the memory before sending it. As soon as the telephone line is free, the machine starts dialling and sending. If you want to send an important document immediately without waiting for the machine to retrieve the scan from its memory, turn on [Real Time TX].

- If the memory is full and you are sending a fax from the ADF, the machine sends the document in real time (even if [Real Time TX] is set to [Off]). If the memory is full, faxes from the scanner glass cannot be sent until you clear some of the memory.
- In Real Time Transmission, the automatic redial feature does not work when using the scanner glass.
- If [Real Time TX] is set to on, the option to scan 2-sided documents is not available.

1. Load your document.
2. Press [Fax] > [Options] > [Real Time TX].
3. Press [On] or [Off].
4. Press [OK].
5. Enter the fax number.
6. Press [Fax Start].

Related Information

- Send a Fax

Send a Fax at a Specified Time (Delayed Fax)

Related Models: MFC-L5700DN/MFC-L5755DW/MFC-L5900DW/MFC-L6700DW/MFC-L6900DW

You can store up to 50 faxes in the machine's memory to be sent within the next twenty-four hour period.

1. Load your document.
2. Press [Fax] > [Options] > [Delayed Fax] > [Delayed Fax].
3. Press [On].
4. Press [Set Time].
5. Enter the time you want the fax to be sent (in 24-hour format), and then press [OK].
   (For example, enter 19:45 for 7:45 PM.)
6. Press [OK].
7. Enter the fax number.
8. Press [Fax Start].
9. Press .

Related Information

- Send a Fax

Add a Cover Page to Your Fax

Related Models: MFC-L5700DN/MFC-L5755DW/MFC-L5900DW/MFC-L6700DW/MFC-L6900DW

You can add a cover page to the next fax or every outgoing fax.

- This feature will not work unless you have programmed your Station ID.
- Your cover page includes your Station ID, a comment, and the name stored in the Address Book, One Touch Dial, or Speed Dial (in some models).

1. Load your document.
2. Press [Fax] > [Options] > [Coverpage Setup] > [Coverpage Setup].
3. Press [On].
4. Press [Coverpage Note].
5. Swipe up or down or press ▲ or ▼ to choose the comment you want to use, and then press the comment.

   Press .
6. Press [OK].
7. Enter the fax number.
8. Press [Fax Start].

The cover page will be added to the next fax. If you want to add the cover page to every outgoing fax, set the settings as the new default.

Related Information

- Send a Fax
- Compose Your Own Comments
- Use a Printed Cover Page

Compose Your Own Comments

Related Models: MFC-L5700DN/MFC-L5755DW/MFC-L5900DW/MFC-L6700DW/MFC-L6900DW

You can set up two comments of your own.

1. Press [Settings] > [All Settings] > [Fax] > [Setup Send] > [Coverpage Setting] > [Coverpage Note].
2. Press [5.] or [6.] to store your own comment.
3. Enter your own comment using the LCD. Press [OK].

   Press A 1 @ to choose numbers, letters or special characters.
4. Press .

Related Information

- Add a Cover Page to Your Fax

Use a Printed Cover Page

Related Models: MFC-L5700DN/MFC-L5755DW/MFC-L5900DW/MFC-L6700DW/MFC-L6900DW

If you want a printed cover page you can write on, print the sample page and attach it to your fax.

1. Press [Settings] > [All Settings] > [Fax] > [Setup Send] > [Coverpage Setting] > [Print Sample].
2. Press [Yes].
   The machine prints the sample cover page.
3. Press .

Related Information

- Add a Cover Page to Your Fax

Cancel a Fax in Progress

Related Models: MFC-L5700DN/MFC-L5755DW/MFC-L5900DW/MFC-L6700DW/MFC-L6900DW

1. Press .
2. Press while the machine is dialling or sending a fax.

   The LCD will display `[Cancel Job?]`.
3. Press an option in the table to cancel or continue the fax job in progress.

Option	Description
`Yes`	The machine cancels sending the fax job.
`No`	The machine exits from the process without cancelling the fax job.

Related Information

- Send a Fax

Check and Cancel a Pending Fax

Related Models: MFC-L5700DN/MFC-L5755DW/MFC-L5900DW/MFC-L6700DW/MFC-L6900DW

You can cancel a fax job before it is sent, by cancelling the fax job while it is stored and waiting in the memory.

1. Press [Settings] > [All Settings] > [Fax] > [Remaining Jobs].
2. Swipe up or down or press ▲ or ▼ to scroll through the waiting jobs, and then press the job you want to cancel.
3. Press [Cancel].
4. Press [Yes] to confirm or press [No] to exit without cancelling.
5. When finished cancelling jobs, press .

Related Information

- Send a Fax

Fax Options

To change fax-sending settings, press the [Options] button.

Option	Description
Fax Resolution	Set the resolution for outgoing faxes. The fax quality often can be improved by changing the Fax Resolution.
2-sided Fax (For automatic 2-sided scanning models)	Set the 2-sided scanning format.
Contrast	Adjust the contrast. If your document is very light or very dark, changing the contrast may improve the fax quality.
Broadcasting	Send the same fax message to more than one fax number at the same time.
Delayed Fax	Set the time of day the delayed faxes will be sent.
Real Time TX	Send a fax immediately without waiting for the machine to retrieve the scan from its memory.
Coverpage Setup	Set the machine to automatically send a cover page that you have pre-programmed.
Overseas Mode	Set to On if you have difficulty sending faxes overseas.
Glass Scan Size	Adjust the scan area of the scanner glass to the size of the document.
Set New Default	Save your settings as the default.
Factory Reset	Restore all settings back to the factory settings.

You can save the current settings by pressing [Save as Shortcut].

Related Information

- Send a Fax

Receive a Fax

- Receive Mode Settings
- Memory Receive (Remote Fax) Options
- Remote Fax Retrieval

Receive Mode Settings

- Receive Modes Overview
- Choose the Correct Receive Mode
- Set the Number of Rings Before the Machine Answers (Ring Delay)
- Set the F/T Ring Time (Fast Double-ring)
- Set Fax Detect
- Shrink Page Size of an Oversized Incoming Fax
- Set the 2-sided Printing for Received Faxes
- Set the Fax Receive Stamp
- Receive a Fax at the End of a Telephone Conversation

Receive Modes Overview

Related Models: MFC-L5700DN/MFC-L5755DW/MFC-L5900DW/MFC-L6700DW/MFC-L6900DW

Some receive modes answer automatically (Fax Only Mode and Fax/Tel Mode). You may want to change the Ring Delay before using these modes.

Fax Only Mode

([Fax] or [Fax Only] in the machine's menu)

Fax Only Mode automatically answers every call as a fax.

Fax/Tel Mode

([Fax/Tel] in the machine's menu)

Fax/Tel Mode helps you manage incoming calls, by recognising whether they are fax or voice calls and handling them in the following ways:

- Faxes will be received automatically.
- Voice calls will start the F/T ring to tell you to pick up the call. The F/T ring is a fast pseudo/double-ring made by your machine.

Manual Mode

([Manual] in the machine's menu)

Manual Mode turns off all automatic answering operations unless you are using the Distinctive Ring Receive feature.

FaxAbility is equivalent to the Distinctive Ring Receive feature in New Zealand.

To receive a fax in Manual Mode, lift the handset of the external telephone connected to the machine or press the button in the table.

Applicable Models	Alternate way to lift the handset
MFC-L5700DN/MFC-L5755DW/MFC-L5900DW/MFC-L6700DW/ MFC-L6900DW	Fax and then Hook

When you hear fax tones (short repeating beeps), press the buttons in the table to receive a fax. Use the Fax Detect feature to receive faxes when you have lifted a handset on the same line as the machine.

Applicable Models	To receive the fax
All MFC models	Fax Start and then Receive

External TAD Mode

([External TAD] in the machine's menu)

External TAD Mode lets an external answering device manage your incoming calls.

Incoming calls will be handled in the following ways:

- Faxes will be received automatically.
- Voice callers can record a message on the external TAD.

Related Information

- Receive Mode Settings

Choose the Correct Receive Mode

Related Models: MFC-L5700DN/MFC-L5755DW/MFC-L5900DW/MFC-L6700DW/MFC-L6900DW

You must choose a Receive Mode depending on the external devices and telephone services you have on your line.

By default, your machine will automatically receive any faxes that are sent to it. The diagram below will help you select the correct mode.

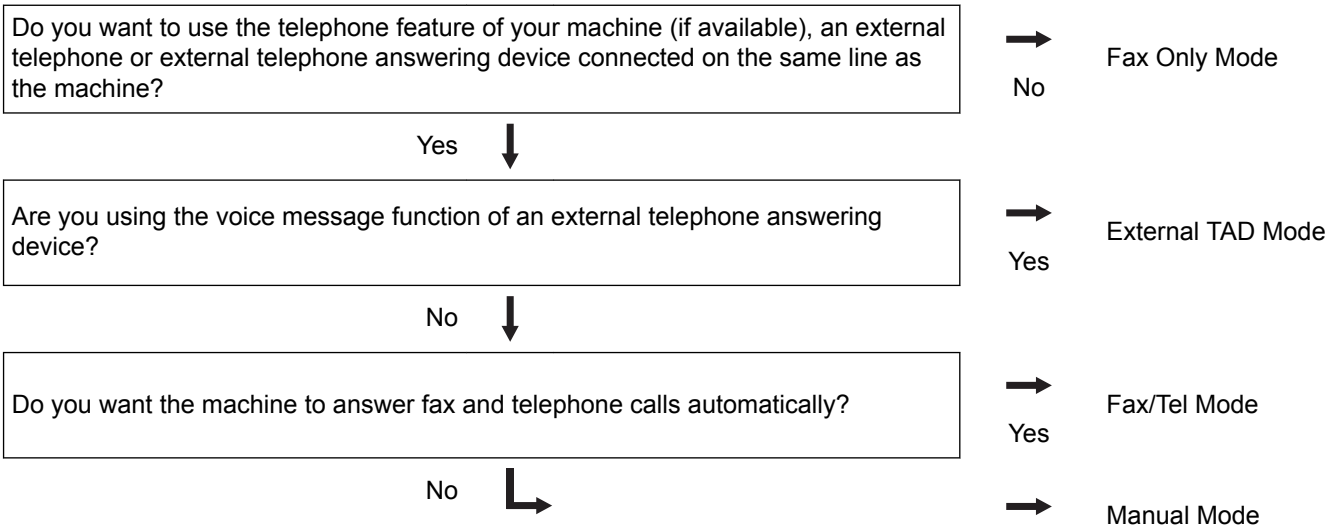

1. Press [Settings] > [All Settings] > [Fax] > [Setup Receive] > [Receive Mode].

   If you cannot change the [Receive Mode], make sure the Distinctive Ring [1] feature is set to Off.

2. Press [Fax], [Fax/Tel], [External TAD], or [Manual].
3. Press .

Related Information

- Receive Mode Settings
- Telephone and Fax Problems
- Turn Off Distinctive Ring

1 Fax Ability in New Zealand.

Set the Number of Rings Before the Machine Answers (Ring Delay)

Related Models: MFC-L5700DN/MFC-L5755DW/MFC-L5900DW/MFC-L6700DW/MFC-L6900DW

When somebody calls your machine, you will hear the normal telephone ring sound. The number of rings is set in the Ring Delay option.

- The Ring Delay setting sets the number of times the machine rings before it answers in the Fax Only and Fax/Tel Modes.
- If you have external or extension telephones on the same line as the machine, choose the maximum number of rings.

1. Press [Settings] > [All Settings] > [Fax] > [Setup Receive] > [Ring Delay].
2. Swipe up or down or press ▲ or ▼ to select the number of rings you want, and then press the number.

If you select [0], the machine will answer immediately and the line will not ring at all (available only for some countries).

3. Press .

Related Information

- Receive Mode Settings
- Telephone and Fax Problems

Set the F/T Ring Time (Fast Double-ring)

Related Models: MFC-L5700DN/MFC-L5755DW/MFC-L5900DW/MFC-L6700DW/MFC-L6900DW

When you set the Receive Mode to Fax/Tel Mode, if the call is a fax, your machine will automatically receive it. However, if it is a voice call, the machine will sound the F/T ring (fast double-ring) for the time you set in the F/T Ring Time option. When you hear the F/T ring, it means that a voice caller is on the line.

- The F/T Ring Time feature works when you set Fax/Tel Mode as the Receive Mode.

Because the F/T ring is made by the machine, extension and external telephones will not ring; however, you can still answer the call on any telephone.

1. Press [Settings] > [All Settings] > [Fax] > [Setup Receive] > [F/T Ring Time].
2. Press how long you want the machine to ring to alert you that you have a voice call.
3. Press .

Even if the caller hangs up during the pseudo/double-ringing, the machine will continue to ring for the set time.

Related Information

- Receive Mode Settings

Set Fax Detect

Related Models: MFC-L5700DN/MFC-L5755DW/MFC-L5900DW/MFC-L6700DW/MFC-L6900DW

If Fax Detect is On: The machine receives a fax call automatically, even if you answer the call. When you see `[Receiving]` on the LCD or when you hear “chirps” through the handset you are using, just replace the handset. Your machine will do the rest.

If Fax Detect is Off: If you are at the machine and answer a fax call by lifting the handset, press the buttons in the following table to receive the fax. If you answered at an extension or external telephone, press ***51** (***91** for New Zealand).

Applicable Models	To receive the fax
MFC-L5700DN/MFC-L5755DW/MFC-L5900DW/ MFC-L6700DW/MFC-L6900DW	`Fax Start` and then `Receive`

- If this feature is set to `[On]`, but your machine does not connect a fax call when you lift an extension or external telephone handset, press the remote activation code ***51** (***91** for New Zealand).
- If you send faxes from a computer on the same telephone line and the machine intercepts them, set Fax Detect to `[Off]`.

1. Press `[Settings]` > `[All Settings]` > `[Fax]` > `[Setup Receive]` > `[Fax Detect]`.
2. Press `[On]` or `[Off]`.
3. Press .

Related Information

- Receive Mode Settings
- Operation from External and Extension Telephones

Shrink Page Size of an Oversized Incoming Fax

Related Models: MFC-L5700DN/MFC-L5755DW/MFC-L5900DW/MFC-L6700DW/MFC-L6900DW

If you enable the auto reduction function, the machine reduces each page of an incoming fax to fit on your paper. The machine calculates the reduction ratio by using the page size of the fax and your Paper Size setting.

1. Press [Settings] > [All Settings] > [Fax] > [Setup Receive] > [Auto Reduction].
2. Press [On] or [Off].
3. Press .

Related Information

- Receive Mode Settings

Set the 2-sided Printing for Received Faxes

Related Models: MFC-L5700DN/MFC-L5755DW/MFC-L5900DW/MFC-L6700DW/MFC-L6900DW

Your machine prints received faxes on both sides of the paper when [2-sided] is set to [On].

- (For Australia and New Zealand) Use A4 size paper (60 to 105 g/m^2) for this function.
- (For Other countries) Use A4, Letter, Legal, Folio, Mexico Legal or India Legal size paper for this function (60 to 105 g/m^2). Make sure the 2-sided tray is set to the correct paper size. If it is not, the paper may not be fed correctly, resulting in a skewed printout or a paper jam.
- When 2-sided printing is enabled, incoming faxes are automatically reduced to fit the paper in the paper tray.

1. Press [Settings] > [All Settings] > [Fax] > [Setup Receive] > [2-sided].
2. Press [On] or [Off].
3. Press .

Related Information

- Receive Mode Settings

Set the Fax Receive Stamp

Related Models: MFC-L5700DN/MFC-L5755DW/MFC-L5900DW/MFC-L6700DW/MFC-L6900DW

You can set the machine to print the received date and time at the top centre of each received fax page.

- Make sure you have set the current date and time on the machine.
- The received time and date will not appear when using Internet Fax.

1. Press [Settings] > [All Settings] > [Fax] > [Setup Receive] > [Fax Rx Stamp].
2. Press [On] or [Off].
3. Press .

Related Information

- Receive Mode Settings

Receive a Fax at the End of a Telephone Conversation

Related Models: MFC-L5700DN/MFC-L5755DW/MFC-L5900DW/MFC-L6700DW/MFC-L6900DW

If you are speaking on the telephone connected to your Brother machine and the other party is also speaking on a telephone connected to his fax machine, at the end of the conversation, the other party can send you a fax before you both hang up.

Your machine's ADF must be empty.

1. Ask the other party to place the document in their machine and to press the Start or Send key.
2. When you hear the CNG tones (slowly repeating beeps), press `[Fax Start]`.

If the machine is in Automatic Redial, wait until it is finished and try again.

3. Press `[Receive]` to receive a fax.
4. Replace the external handset.

Related Information

- Receive Mode Settings

Memory Receive (Remote Fax) Options

Use Memory Receive (Remote Fax) options to direct incoming faxes while you are away from the machine. You can use only one Memory Receive option at a time.

Memory Receive (Remote Fax) can be set to:

- Fax Forwarding
- Fax Storage
- PC-Fax Receive
- Forward to Cloud

  The machine forwards your received faxes to online services. For more detailed information, see the *Web Connect Guide*.
- Off

- Forward Incoming Faxes to Another Machine
- Store Incoming Faxes in the Machine's Memory
- Change Memory Receive Options
- Turn Off Memory Receive
- Print a Fax Stored in the Machine's Memory
- Use PC-Fax Receive to Transfer Received Faxes to Your Computer (Windows only)

Forward Incoming Faxes to Another Machine

Related Models: MFC-L5700DN/MFC-L5755DW/MFC-L5900DW/MFC-L6700DW/MFC-L6900DW

Use the Fax Forwarding feature to automatically forward your incoming faxes to another machine.

1. Press [Settings] > [All Settings] > [Fax] > [Setup Receive] > [Memory Receive].
2. Press [Fax Forward].
3. Do one of the following:
   - Press [Manual] to enter the forwarding fax number (up to 20 characters) using the LCD.

     Press [OK].

     To forward a fax using an email address, press , enter the email address, and press [OK].

     (On certain models, you must download Internet Fax to use the Internet Fax feature and the Scan to Email server feature.)
   - Swipe up or down or press ▲ or ▼ to display to scroll until you find the fax number or email address where you want your faxes to be forwarded.

     Press the fax number or email address you want.

NOTE

- Press [Backup Print: On] or [Backup Print: Off]. If you select [Backup Print: On], the machine also prints a copy of received faxes at your machine.

4. Press .

Related Information

- Memory Receive (Remote Fax) Options

Store Incoming Faxes in the Machine's Memory

Related Models: MFC-L5700DN/MFC-L5755DW/MFC-L5900DW/MFC-L6700DW/MFC-L6900DW

Use the Fax Storage feature to store incoming faxes in the machine's memory. Retrieve your stored fax messages from your fax machine when you are at another location using the Remote Retrieval commands. Your machine will print a backup copy of each stored fax.

1. Press [Settings] > [All Settings] > [Fax] > [Setup Receive] > [Memory Receive].
2. Swipe up or down or press ▲ or ▼ to display the [Fax Storage] option, and then press [Fax Storage].
3. Press .

Related Information

- Memory Receive (Remote Fax) Options
- How Your Brother Machine Receives an Internet Fax (I-Fax)

Change Memory Receive Options

Related Models: MFC-L5700DN/MFC-L5755DW/MFC-L5900DW/MFC-L6700DW/MFC-L6900DW

If received faxes are in your machine's memory when you change the Remote Fax operations, the LCD will ask you one of the following questions:

If received faxes have been printed automatically, the LCD displays [Erase all documents?]

- Do one of the following:
  - If you press [Yes], faxes in the memory will be erased before the setting changes.
  - If you press [No], faxes in the memory will not be erased and the setting will be unchanged.

If unprinted faxes are in the machine's memory, the LCD displays [Print all faxes?]

- Do one of the following:
  - If you press [Yes], faxes in the memory will be printed before the setting changes.
  - If you press [No], faxes in the memory will not be printed and the setting will be unchanged.

If received faxes are left in the machine's memory when you change to [PC Fax Receive] from another option ([Fax Forward] or [Fax Storage]).

- Press [<USB>] or the name of the computer if you are on a network, and then press [OK].

  The LCD displays:

  [Send Fax to PC?]

  - If you press [Yes], faxes in the memory will be sent to your computer before the setting changes. You will be asked if you want to turn on Backup Print.
  - If you press [No], faxes in the memory will not be erased and the setting will be unchanged.

Related Information

- Memory Receive (Remote Fax) Options

Turn Off Memory Receive

Related Models: MFC-L5700DN/MFC-L5755DW/MFC-L5900DW/MFC-L6700DW/MFC-L6900DW

Turn off Memory Receive if you do not want the machine to save or transfer incoming faxes.

1. Press [Settings] > [All Settings] > [Fax] > [Setup Receive] > [Memory Receive].
2. Press [Off].

The LCD displays options if there are received faxes still in your machine's memory.

3. Press .

Related Information

- Memory Receive (Remote Fax) Options

Print a Fax Stored in the Machine's Memory

Related Models: MFC-L5700DN/MFC-L5755DW/MFC-L5900DW/MFC-L6700DW/MFC-L6900DW

If you select [Fax Storage], you can still print a fax from the memory when you are at your machine.

1. Press [Settings] > [All Settings] > [Fax] > [Print Document].
2. Press [Yes].

Related Information

- Memory Receive (Remote Fax) Options

Use PC-Fax Receive to Transfer Received Faxes to Your Computer (Windows only)

Related Models: MFC-L5700DN/MFC-L5755DW/MFC-L5900DW/MFC-L6700DW/MFC-L6900DW

Turn on the PC-Fax Receive feature, automatically store incoming faxes to your machine's memory, and then send them to your computer. Use your computer to view and store these faxes.

To transfer the received faxes to your computer you must have the PC-FAX Receiving software running on your computer.

Even if you have turned off your computer (at night or on the weekend, for example), your machine will receive and store your faxes in its memory.

When you start your computer and the PC-FAX Receiving software runs, your machine transfers your faxes to your computer automatically.

If you selected [Backup Print: On], the machine will also print the fax.

1. Press [Settings] > [All Settings] > [Fax] > [Setup Receive] > [PC Fax Receive].
2. Press [On], and then following the LCD instruction.

- Before you can set up PC-Fax Receive, you must install the MFL-Pro Suite software on your computer. Make sure your computer is connected and turned on.
- PC-Fax Receive is not available for the Mac operating systems.
- If you get an error message and the machine cannot print the faxes in the memory, you can use this setting to transfer your faxes to your computer.

3. Press [<USB>] or the name of the computer you want to receive faxes if you are on a network, and then press [OK].
4. Press [Backup Print: On] or [Backup Print: Off].
5. Press .

Related Information

- Memory Receive (Remote Fax) Options
- Transfer Faxes to Your Computer
- Receive Faxes Using PC-FAX Receive (Windows)

Remote Fax Retrieval

Use Remote Retrieval to call your machine from any touch-tone telephone or fax machine, and use a remote access code and remote commands to retrieve fax messages.

- Set a Remote Access Code
- Use Your Remote Access Code
- Remote Retrieval Commands
- Forward Faxes Remotely
- Change the Fax Forwarding Number

Set a Remote Access Code

Related Models: MFC-L5700DN/MFC-L5755DW/MFC-L5900DW/MFC-L6700DW/MFC-L6900DW

Set a Remote Access Code to access and control your Brother machine even when you are away from it.

Before you can use the remote access and retrieval features, you must set up your own code. The factory default code is the inactive code (---*).

1. Press [Settings] > [All Settings] > [Fax] > [Remote Access].
2. Enter a three-digit code using the numbers [0] to [9], [*] or [#] using the LCD (the preset '*' cannot be changed), and then press [OK].

- DO NOT use the same code used for your Remote Activation Code (*51) (*91 for New Zealand) or Remote Deactivation Code (#51) (#91 for New Zealand).
- To make your code inactive, press and hold to restore the inactive setting (---*), and then press [OK].

3. Press .

Related Information

- Remote Fax Retrieval

Use Your Remote Access Code

Related Models: MFC-L5700DN/MFC-L5755DW/MFC-L5900DW/MFC-L6700DW/MFC-L6900DW

1. Dial your fax number from a telephone or another fax machine using touch tone.
2. When your machine answers, immediately enter your Remote Access Code (three digits followed by *).
3. The machine signals if it has received messages:
   - One long beep -- Fax messages
   - No beeps -- No messages
4. When the machine gives two short beeps, enter a command.
   - The machine will hang up if you wait longer than 30 seconds to enter a command.
   - The machine will beep three times if you enter an invalid command.
5. Press 9 0 to reset the machine when you are finished.
6. Hang up.
   - If your machine is set to Manual mode and you want to use the remote retrieval features, wait for about 100 seconds after it starts ringing, and then enter the remote access code within 30 seconds.
   - This function may not be available in some countries or supported by your local telephone company.

Related Information

- Remote Fax Retrieval

Remote Retrieval Commands

Related Models: MFC-L5700DN/MFC-L5755DW/MFC-L5900DW/MFC-L6700DW/MFC-L6900DW

Use the Remote Commands in this table to access fax commands and options when you are away from your Brother machine. When you call the machine and enter your remote access code (three digits followed by *), the system will sound two short beeps and you must enter a Remote Command (column 1), followed by one of the options (column 2) for that command.

Remote commands	Options	Operation details
95	**Change the Fax Forwarding, or Fax Storage settings**	
	1 OFF	You can select *Off* after you retrieve or erase all your messages.
	2 Fax Forwarding	One long beep means the change is accepted. If you hear three short beeps, you cannot make a change because something has not been set up (for example, a Fax Forwarding number has not been registered). You can register your Fax Forwarding number by entering 4. After you register the number, Fax Forwarding will work.
	4 Fax Forwarding number	
	6 Fax Storage	
96	**Retrieve a fax**	
	2 Retrieve all faxes	Enter the fax number of a remote fax machine to receive stored fax messages.
	3 Erase faxes from memory	If you hear one long beep, fax messages have been erased from memory.
97	**Check the receiving status**	
	1 Fax	Check whether your machine has received any faxes. If yes, you will hear one long beep. If not, you will hear three short beeps.
98	**Change the Receive Mode**	
	1 External TAD	One long beep means the change has been accepted.
	2 Fax/Tel	
	3 Fax Only	
90	**Exit**	Press **9 0** to stop remote retrieval. Wait for the long beep, then hang up.

Related Information

- Remote Fax Retrieval

Forward Faxes Remotely

Related Models: MFC-L5700DN/MFC-L5755DW/MFC-L5900DW/MFC-L6700DW/MFC-L6900DW

Call your Brother machine from any touch-tone telephone or fax machine to forward incoming faxes to another machine.

You must turn on Fax Storage to use this feature.

1. Dial your fax number.
2. When your machine answers, enter your Remote Access Code (three digits followed by *). If you hear one long beep, you have messages.
3. When you hear two short beeps, press 9 6 2.
4. Wait for the long beep, and then use the dial pad to enter the number of the remote fax machine where you want your fax messages sent, followed by # # (up to 20 digits).

   You cannot use * and # as dial numbers. However, press # if you want to create a pause.

5. Hang up after you hear your machine beep. Your machine will call the other fax machine, which will then print your fax messages.

Related Information

- Remote Fax Retrieval

Change the Fax Forwarding Number

Related Models: MFC-L5700DN/MFC-L5755DW/MFC-L5900DW/MFC-L6700DW/MFC-L6900DW

You can change your fax forwarding number from another touch-tone telephone or fax machine.

1. Dial your fax number.
2. When your machine answers, enter your Remote Access Code (three digits followed by *). If you hear one long beep, you have messages.
3. When you hear two short beeps, press 9 5 4.
4. Wait for the long beep, enter the new number (up to 20 digits) of the remote fax machine you want your fax messages forwarded to using the dial pad, then enter # #.

   You will hear one long beep.

   You cannot use * and # as dial numbers. However, press # if you want to create a pause.

5. When you hear two short beeps, press 9 0 to stop Remote Access when you have finished.
6. Hang up after you hear your machine beep.

Related Information

- Remote Fax Retrieval

Voice Operations and Fax Numbers

- Voice Operations
- Store Fax Numbers
- Set up Groups for Broadcasting
- Combine Address Book Numbers

Voice Operations

- Send Tone Signals
- Pick up a Voice Call in Fax/Tel Receive Mode

Send Tone Signals

Related Models: MFC-L5700DN/MFC-L5755DW/MFC-L5900DW/MFC-L6700DW/MFC-L6900DW

If you have a Pulse dialling service, but must send Tone signals (for example, for telephone banking), follow these steps. If you have a Touch Tone service, you will not need this feature to send tone signals. (This feature is not available in New Zealand.)

1. Press [Fax].
2. Press [Hook].
3. Press # on the machine's LCD.
   Any digits dialled after this will send tone signals.

When you are finished with the call, the machine will return to the Pulse dialling service.

Related Information

- Voice Operations

Pick up a Voice Call in Fax/Tel Receive Mode

Related Models: MFC-L5700DN/MFC-L5755DW/MFC-L5900DW/MFC-L6700DW/MFC-L6900DW

When the machine is in Fax/Tel mode, it will use the F/T Ring (fast double-ring) to alert you to pick up a voice call.

If you are at the machine, lift the external telephone's handset, and then press the button in the following table to answer:

Applicable Models	To pick up voice call
MFC-L5700DN/MFC-L5755DW/MFC-L5900DW/ MFC-L6700DW/MFC-L6900DW	`Pickup`

If you are at an extension telephone, lift the handset during the F/T Ring, and then press #51 (#91 for New Zealand) between the fast double-rings. If no one is on the line, or if someone wants to send you a fax, send the call back to the machine by pressing *51 (*91 for New Zealand).

Related Information

- Voice Operations

Store Fax Numbers

- Store Address Book Numbers
- Change or Delete Address Book Names or Numbers
- How to Enter Text on Your Brother Machine

Store Address Book Numbers

Related Models: MFC-L5700DN/MFC-L5755DW/MFC-L5900DW/MFC-L6700DW/MFC-L6900DW

1. Press [Fax] > [Address Book].
2. Do the following steps:
   a. Press [Edit].
   b. Press [Add New Address].
   c. Press [Name].
   d. Enter the name using the LCD (up to 16 characters), and then press [OK].
   e. Press [Address].
   f. Enter the fax or telephone number using the LCD (up to 20 digits), and then press [OK].

   - To store an email address to use with Internet Fax or Scan to Email server, press and enter the email address and press [OK].

     (On certain models, you must download Internet Fax to use the Internet Fax feature and the Scan to Email server feature.)

   g. Press [OK].

   To store another Address Book number, repeat these steps.
3. Press .

Related Information

- Store Fax Numbers
- Store Address Book Numbers from Outgoing Calls

Store Address Book Numbers from Outgoing Calls

Related Models: MFC-L5700DN/MFC-L5755DW/MFC-L5900DW/MFC-L6700DW/MFC-L6900DW

You can store Address Book numbers from the Outgoing Call history.

1. Press [Fax] > [Call History] > [Outgoing Call].
2. Swipe up or down or press ▲ or ▼ to display the number you want, and then press it.
3. Press [Edit] > [Add to Address Book] > [Name].

To delete the number, press [Edit] > [Delete]. Press [Yes] to confirm.

4. Enter the name using the LCD (up to 16 characters).
5. Press [OK].
6. Press [OK] to confirm the fax or telephone number you want to store.
7. Press .

Related Information

- Store Address Book Numbers

Change or Delete Address Book Names or Numbers

Related Models: MFC-L5700DN/MFC-L5755DW/MFC-L5900DW/MFC-L6700DW/MFC-L6900DW

1. Press [Fax] > [Address Book] > [Edit].
2. Do one of the following:
   - Press [Change] to edit the names or fax or telephone numbers.

     Swipe up or down or press ▲ or ▼ to display the number you want to change, and then press it.
     - To change the name, press [Name]. Enter the new name (up to 16 characters) using the LCD, and then press [OK].
     - To change the fax or telephone number, press [Address]. Enter the new fax or telephone number (up to 20 digits) using the LCD, and then press [OK].

     Press [OK] to finish.

     How to enter text:

     To change a character, press ◀ or ▶ to position the cursor to highlight the incorrect character, and then press .

     Enter the new character.
   - To delete numbers, press [Delete].
     - Select the fax or telephone numbers you want to delete by pressing them to display a red check mark, and then press [OK].
3. Press .

Related Information

- Store Fax Numbers

Set up Groups for Broadcasting

Related Models: MFC-L5700DN/MFC-L5755DW/MFC-L5900DW/MFC-L6700DW/MFC-L6900DW

A Group, which can be stored in the Address Book (One Touch Dial or Speed Dial in some models) allows you to send the same fax message to many fax numbers.

First, you must store each fax number in the Address Book. Then you can include them as numbers in the Group. Each Group uses up an Address Book (a One Touch Dial, or a Speed Dial in some models) number.

Applicable Models	Maximum number of Group	Maximum numbers in a large Group
MFC-L5700DN/MFC-L5755DW/ MFC-L5900DW/MFC-L6700DW/ MFC-L6900DW	20 groups	299 numbers

1. Press [Fax] > [Address Book].
2. Do the following steps:
   a. Press [Edit] > [Setup Groups] > [Name].
   b. Enter the Group name (up to 16 characters) using the LCD, and then press [OK].
   c. Press [Add/Delete].
   d. Add Address Book numbers to the Group by pressing them to display a red checkmark, and then press [OK].
   e. Read and confirm the displayed list of names and numbers you have chosen, and then press [OK] to save your Group.

   To store another Group for broadcasting, repeat these steps.
3. Press .

Related Information

- Voice Operations and Fax Numbers
- Change a Group Name
- Delete a Group
- Add or Delete Group Members

Change a Group Name

Related Models: MFC-L5700DN/MFC-L5755DW/MFC-L5900DW/MFC-L6700DW/MFC-L6900DW

1. Press [Fax] > [Address Book] > [Edit] > [Change].
2. Swipe up or down or press ▲ or ▼ to display the Group you want, and then press the Group name.
3. Press [Name].
4. Enter the new Group name (up to 16 characters) using the LCD, and then press [OK].

How to change the stored name:

To change a character, press ◀ or ▶ to position the cursor to highlight the incorrect character, and then press .

Enter the new character.

5. Press [OK].
6. Press .

Related Information

- Set up Groups for Broadcasting

Delete a Group

Related Models: MFC-L5700DN/MFC-L5755DW/MFC-L5900DW/MFC-L6700DW/MFC-L6900DW

1. Press [Fax] > [Address Book] > [Edit] > [Delete].
2. Swipe up or down or press ▲ or ▼ to display the Group you want, and then press the Group name.
3. Press [OK].
4. Press .

Related Information

- Set up Groups for Broadcasting

Add or Delete Group Members

Related Models: MFC-L5700DN/MFC-L5755DW/MFC-L5900DW/MFC-L6700DW/MFC-L6900DW

1. Press [Fax] > [Address Book] > [Edit] > [Change].
2. Swipe up or down or press ▲ or ▼ to display the Group you want, and then press the Group name.
3. Swipe up or down or press ▲ or ▼ to display the [Add/Delete] option, and then press [Add/Delete].
4. Swipe up or down or press ▲ or ▼ to display the number you want to add or delete.
5. Do the following for each number you want to change:
   - To add a number to the Group, press the check box of the number to add a check mark.
   - To delete a number from the Group, press the check box of the number to remove the check mark.
6. Press [OK].
7. Press [OK].
8. Press .

Related Information

- Set up Groups for Broadcasting

Combine Address Book Numbers

Related Models: MFC-L5700DN/MFC-L5755DW/MFC-L5900DW/MFC-L6700DW/MFC-L6900DW

Sometimes you may want to choose from several long-distance carriers when you send a fax. Rates may vary depending on the time and destination. To take advantage of low rates, you can store the access codes of long-distance carriers and credit card numbers as Address Book numbers.

You can store these long dialling sequences by dividing them and setting them up as separate Address Book numbers in any combination. You can even include manual dialling using the dial pad.

For example: You might have stored '01632' and '960555' in your machine as shown in the following table.

Applicable Models	'01632' stored in	'960555' stored in
MFC-L5700DN/MFC-L5755DW/ MFC-L5900DW/MFC-L6700DW/ MFC-L6900DW	Address Book: Brother 1	Address Book: Brother 2

You can use them both to dial '01632-960555' by using the following procedure.

1. Press [Fax] > [Address Book].
2. Swipe up or down or press ▲ or ▼ to display the number of Brother 1.
3. Press the number.
4. Press [Apply].
5. Press [Address Book].
6. Press [OK].
7. Swipe up or down or press ▲ or ▼ to display the number of Brother 2.
8. Press the number.
9. Press [Apply].
10. Press [Fax Start].

    The machine will dial '01632-960555'.

To temporarily change a number, you can substitute part of the number by pressing it using the LCD. For example, to change the number to '01632-960556', you could enter the number (Brother 1: 01632) using Address Book, press [Apply], and then press 960556 using the LCD.

If you must wait for another dial tone or signal at any point in the dialling sequence, create a pause in the number by pressing [Pause].

Related Information

- Voice Operations and Fax Numbers

Telephone Services and External Devices

- Distinctive Ring
- FaxAbility
- External TAD (Telephone Answering Device)
- External and Extension Telephones
- Multi-line Connections (PABX)

Distinctive Ring

Related Models: MFC-L5700DN/MFC-L5755DW/MFC-L5900DW/MFC-L6700DW/MFC-L6900DW

This feature is available only for some countries.

For Australia

Distinctive Ring is a function of your Brother machine that allows a person with one line to receive fax and voice calls through two different phone numbers on that one line. Brother uses the term “Distinctive Ring”, but telephone companies market the service under a variety of names. This service establishes a second telephone number on the same line as your existing telephone number, and each number has its own ring pattern. Typically, the original number rings with the standard ring pattern and is used for receiving voice calls, and the second number rings with a different ring pattern and is used for receiving faxes. Only one call can be answered (or made) at any one time and while this call is in progress, incoming calls to either number will be presented with a busy tone.

- Contact your Telephone Service Provider to determine Distinctive Ring availability and any other related details.
- After you have set the Distinctive Ring feature to On, the receive mode is set to `[Manual]` automatically. Your Distinctive Ring Number does not allow Voice calls - only Faxes. You can not change the receive mode from `[Manual]` mode while the Distinctive Ring is set to on.

How does your telephone company’s ‘Distinctive Ring’ service work?

Using “Distinctive Ring” service of your telephone company is the most efficient way to receive both fax and telephone calls on the same line. When the voice call comes in, all phones (extension and external) and the fax machine will ring to alert you to pick it up. If a fax call comes in, the fax machine will answer automatically without ringing, whereas the extension and external phones will ring twice with a Distinctive Ring pattern. It is also a more efficient way of operating a Fax machine with an extension phone as you do not have to use the remote activation codes. It gives you two independent numbers without the higher cost of a second line.

Flowchart Sequence of Incoming call

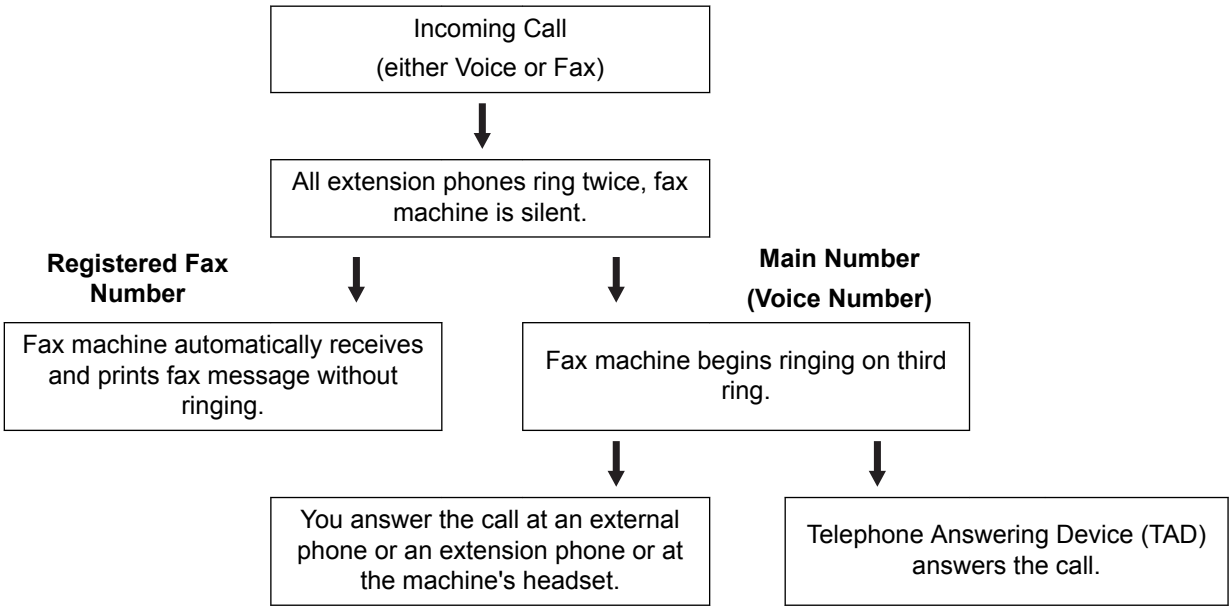

What does Brother’s ‘Distinctive Ring’ do?

The Brother machine has a Distinctive Ring feature that allows you to use your machine to take full advantage of the telephone company’s Distinctive Ring service. The new telephone number on your line can just receive faxes.

For Singapore and Hong Kong

This machine feature lets you use the Distinctive Ring subscriber service offered by some telephone companies, which allows you to have several telephone numbers on one phone line. Each phone number has its own Distinctive Ring pattern, so you will know which phone number is ringing. This is one way you can have a separate phone number for your machine.

Your machine has a Distinctive Ring function, allowing you to dedicate one phone number just for receiving faxes. You will need to set Distinctive Ring to On.

- You can switch it off temporarily, then turn it back on. When you get a new fax number, make sure you reset this function.
- The machine will answer only calls to the Distinctive Ring number.

Related Information

- Telephone Services and External Devices
- Turn On Distinctive Ring
- Turn Off Distinctive Ring

Turn On Distinctive Ring

Related Models: MFC-L5700DN/MFC-L5755DW/MFC-L5900DW/MFC-L6700DW/MFC-L6900DW

For Australia

After you set the Distinctive Ring feature to [On], the receive mode is automatically set to [Manual]. Your Distinctive Ring Number does not allow Voice calls - only Faxes. You cannot change the receive mode to another mode while the Distinctive Ring is set to on.

For Singapore and Hong Kong

After you set the Distinctive Ring feature to [On], the receive mode is automatically set to [Manual]. Unless you have a TAD or Voice Mail set up on the Distinctive Ring number, Manual mode means you must answer all the calls yourself. You cannot change the receive mode to another mode while the Distinctive Ring is set to on.

When Distinctive Ring is on, the LCD will display [D/R] as the Receive Mode.

1. Press [Settings] > [All Settings] > [Fax] > [Miscellaneous] > [Distinctive].
2. Press [On].
3. Press .

Related Information

- Distinctive Ring

Turn Off Distinctive Ring

Related Models: MFC-L5700DN/MFC-L5755DW/MFC-L5900DW/MFC-L6700DW/MFC-L6900DW

1. Press [Settings] > [All Settings] > [Fax] > [Miscellaneous] > [Distinctive].
2. Press [Off].
3. Press .

If you turn off Distinctive Ring, the machine will stay in Manual Mode. You must set the Receive Mode again.

Related Information

- Distinctive Ring
- Choose the Correct Receive Mode

FaxAbility

Related Models: MFC-L5700DN/MFC-L5755DW/MFC-L5900DW/MFC-L6700DW/MFC-L6900DW

This feature is available only in New Zealand.

FaxAbility is a service offered by Telecom that allows you to have an additional number on one phone line, with its own distinctive ring pattern. This way, when you get an incoming call, you can identify the number being called by its ring.

How Will the Fax Machine Treat All Other Numbers?

FaxAbility mode ensures that the machine will answer calls to the FaxAbility (secondary) number. When a call comes in to your main number, all the phones will ring. You can set an external answering device (TAD) to answer calls on the other number(s). (See the chart bellow.)

What is the Advantage of Using the FaxAbility Function?

Using FaxAbility is the most efficient way to receive both fax and telephone calls on the same line. It is much easier for your callers who dial manually. The fax machine will answer with receiving tones so they will not have to press an activation code. And the people who call to talk on your main number will not have to talk to your fax machine. Basically, it gives you two independent numbers without the higher cost of a second line.

How Does FaxAbility Work?

For example, Your telephone number will have the standard ring pattern of long, long tone, while the new number will have a ring pattern of long, silence, long. When FaxAbility is On, you will not hear the first ring of all incoming calls on the fax machine. Extension phones will ring as usual. If the fax machine recognises the ring pattern, all ringing will stop and the fax machine will answer and automatically receive the fax message. Otherwise, you will hear the extension phones and the fax machine continue to ring. The fax machine always listens to the ring pattern before it answers, so do not pick up the phone during that time. You will quickly learn to recognise the ring pattern for faxes, so you will not be tempted to answer that number. Either you or a telephone answering device can answer the main number(s).

Flowchart Sequence of Incoming call

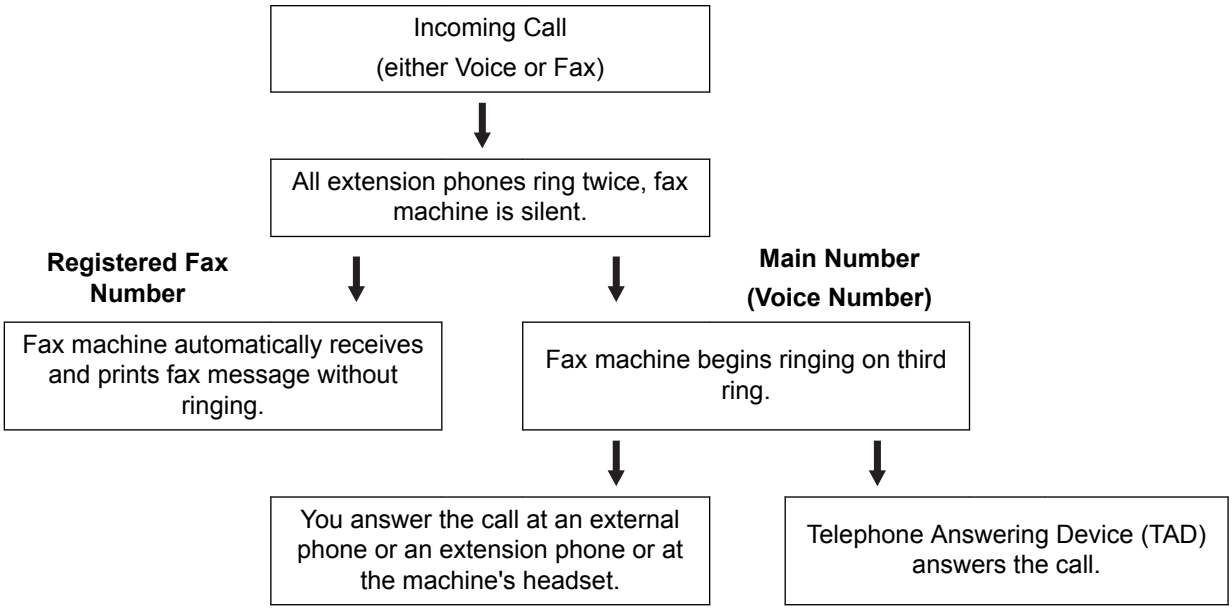

After you have set the FaxAbility feature to on, the receive mode is set to `[Manual]` automatically. Unless you have a TAD or Voice Mail set up on the FaxAbility number, Manual mode means you must answer all the call yourself. You can not change the receive mode to the other mode while the FaxAbility is set to on. When FaxAbility is on, the LCD will show `[D/R]` as the Receive Mode.

Related Information

- Telephone Services and External Devices
- Turn FaxAbility On or Off

Turn FaxAbility On or Off

Related Models: MFC-L5700DN/MFC-L5755DW/MFC-L5900DW/MFC-L6700DW/MFC-L6900DW

This feature is available only in New Zealand.

The FaxAbility function is designed to accommodate the FaxAbility service provided by Telecom.

Call Waiting beeps caused by incoming calls on your main number can affect fax transmissions. If you have FaxAbility Service but don't have Call Waiting, you need do nothing at this stage. If you do have Call Waiting as well as FaxAbility, set the Call Waiting menu option to On.

1. Press [Settings] > [All Settings] > [Fax] > [Miscellaneous] > [FaxAbility].
2. Press [On] or [Off].

- If you have FaxAbility service, select [On].
- To turn off FaxAbility, select [Off].

3. Press [Call Waiting].
4. Press [On] or [Off].

- If you have Call Waiting service, select [On] to avoid the trouble caused by Call Waiting.
- To turn off Call Waiting, select [Off].

5. Press .

Related Information

- FaxAbility

External TAD (Telephone Answering Device)

Related Models: MFC-L5700DN/MFC-L5755DW/MFC-L5900DW/MFC-L6700DW/MFC-L6900DW

You can connect an external Telephone Answering Device (TAD) to the same line as your machine. When the TAD answers a call, your machine will “listen” for the CNG (fax calling) tones sent by a sending fax machine. If it hears them it will take over the call and receive the fax. If it does not hear them, it will let your TAD take a voice message and the LCD will show `[Telephone]`.

The external TAD must answer within four rings (we recommend setting it to two rings). This is because your machine cannot hear the CNG tones until the external TAD has picked up the call. The sending machine will send CNG tones for only eight to ten seconds longer. We do not recommend using the toll saver feature on your external TAD if it needs more than four rings to activate it.

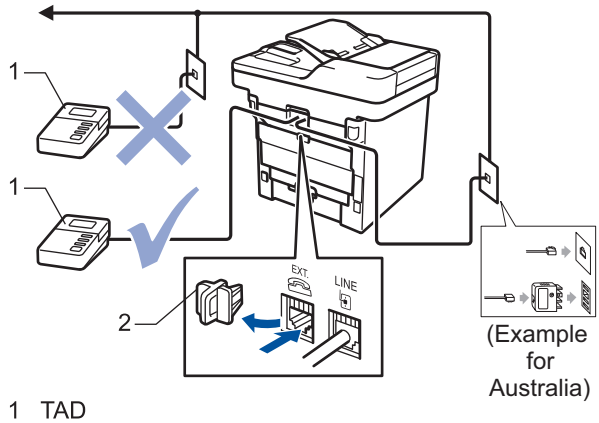

1 TAD
2 Protective Cap

IMPORTANT

DO NOT connect a TAD elsewhere on the same telephone line.

If you have problems receiving faxes, reduce the Ring Delay setting on your external TAD.

Related Information

- Telephone Services and External Devices
- Connect an External TAD
- Record an Outgoing Message (OGM) on the External TAD

Connect an External TAD

Related Models: MFC-L5700DN/MFC-L5755DW/MFC-L5900DW/MFC-L6700DW/MFC-L6900DW

1. Set your external TAD to one or two rings. (The machine's Ring Delay setting does not apply.)
2. Record an outgoing message on your external TAD.
3. Set the TAD to answer calls.
4. Set the Receive Mode on your machine to `[External TAD]`.

Related Information

- External TAD (Telephone Answering Device)

Record an Outgoing Message (OGM) on the External TAD

Related Models: MFC-L5700DN/MFC-L5755DW/MFC-L5900DW/MFC-L6700DW/MFC-L6900DW

1. Record 5 seconds of silence at the beginning of your message. This allows your machine time to listen for fax tones.
2. Limit your speaking to 20 seconds.
3. End your 20-second message by giving your Remote Activation Code for people sending manual faxes. For example: “After the beep, leave a message or press *51 and Start to send a fax.”

NOTE

We recommend beginning your OGM with an initial 5 second silence because the machine cannot hear fax tones over a loud voice. You may try leaving out this pause, but if your machine has trouble receiving faxes, then you should re-record the OGM to include it.

Related Information

- External TAD (Telephone Answering Device)

External and Extension Telephones

- Connect an External or Extension Telephone
- Operation from External and Extension Telephones
- If You Use a Non-Brother Cordless External Handset
- Use the Remote Codes

Connect an External or Extension Telephone

Related Models: MFC-L5700DN/MFC-L5755DW/MFC-L5900DW/MFC-L6700DW/MFC-L6900DW

You can connect a separate telephone to your machine as shown in the diagram below.

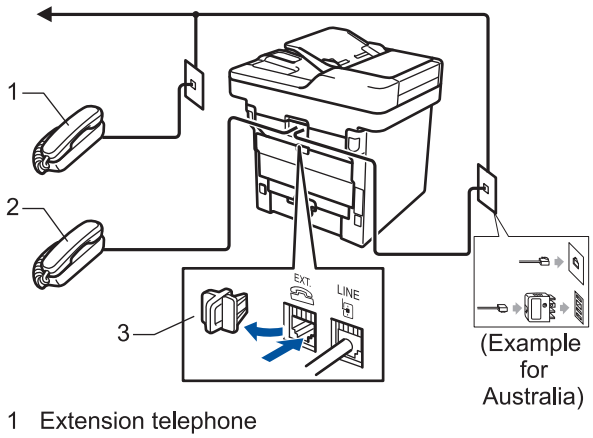

1 Extension telephone
2 External telephone
3 Protective Cap

Related Information

- External and Extension Telephones

Operation from External and Extension Telephones

Related Models: MFC-L5700DN/MFC-L5755DW/MFC-L5900DW/MFC-L6700DW/MFC-L6900DW

If you answer a fax call at an extension or an external telephone, you can make your machine take the call by using the Remote Activation Code. When you press the Remote Activation Code ***51** (***91** for New Zealand), the machine starts to receive the fax.

If the machine answers a voice call and pseudo/double-rings for you to take over, you can take the call at an extension telephone by pressing the Remote Deactivation Code **#51** (**#91** for New Zealand).

If you answer a call and no one is on the line:

You should assume that you're receiving a manual fax.

Press ***51** (***91** for New Zealand) and wait for the chirp or until the LCD displays `[Receiving]`, and then hang up.

You can also use the Fax Detect feature to make your machine automatically take the call.

Related Information

- External and Extension Telephones
- Set Fax Detect

If You Use a Non-Brother Cordless External Handset

Related Models: MFC-L5700DN/MFC-L5755DW/MFC-L5900DW/MFC-L6700DW/MFC-L6900DW

If your non-Brother cordless telephone is connected to the telephone line cord and you typically carry the cordless handset elsewhere, it is easier to answer calls during the Ring Delay.

If you let the machine answer first, you must go to the machine so you can press `[Pickup]` or **Hook** to transfer the call to the cordless handset.

Related Information

- External and Extension Telephones

Use the Remote Codes

Related Models: MFC-L5700DN/MFC-L5755DW/MFC-L5900DW/MFC-L6700DW/MFC-L6900DW

Remote Activation Code

If you answer a fax call on an extension or external telephone, you can tell your machine to receive it by pressing the Remote Activation Code ***51** (***91** for New Zealand). Wait for the chirping sounds, and then replace the handset.

If you answer a fax call at the external telephone, you can make the machine receive the fax by pressing the buttons in the following table:

Applicable Models	To make the machine receive the fax
MFC-L5700DN/MFC-L5755DW/MFC-L5900DW/MFC-L6700DW/MFC-L6900DW	`Fax Start` and then `Receive`

Remote Deactivation Code

If you receive a voice call and the machine is in F/T mode, it will start to sound the F/T ring (fast double-ring) after the initial ring delay. If you pick up the call on an extension telephone you can turn the F/T ring off by pressing **#51** (**#91** for New Zealand) (make sure you press this between the rings).

If the machine answers a voice call and fast double-rings for you to take over, you can take the call at the external telephone by pressing the button in the following table:

Applicable Models	To pick up voice call
MFC-L5700DN/MFC-L5755DW/MFC-L5900DW/MFC-L6700DW/MFC-L6900DW	`Pickup`

Related Information

- External and Extension Telephones
- Change the Remote Codes

Change the Remote Codes

Related Models: MFC-L5700DN/MFC-L5755DW/MFC-L5900DW/MFC-L6700DW/MFC-L6900DW

The preset Remote Activation Code is ***51** (***91** for New Zealand). The preset Remote Deactivation Code is **#51** (**#91** for New Zealand). If you are always disconnected when accessing your External TAD remotely, try changing the three-digit remote codes using the numbers 0-9, *, #.

1. Press [Settings] > [All Settings] > [Fax] > [Setup Receive] > [Remote Codes].
2. Do one of the following:
   - To change the Remote Activation Code, press [Act.Code]. Enter the new code, and then press [OK].
   - To change the Remote Deactivation Code, press [Deact.Code]. Enter the new code, and then press [OK].
   - If you do not want to change the Codes, go to the next step.
   - To turn off (or turn on) the Remote Codes, press [Remote Codes], and then press [Off] (or [On]).
3. Press .

Related Information

- Use the Remote Codes

Multi-line Connections (PABX)

Related Models: MFC-L5700DN/MFC-L5755DW/MFC-L5900DW/MFC-L6700DW/MFC-L6900DW

Most offices use a central telephone system.

Brother recommends that all our machines be connected to a discreet (dedicated) line. Although a particular PABX may appear to work with a particular model of fax machine, we cannot guarantee that the unit will operate correctly.

While it is often relatively simple to connect a fax machine to a PABX, (Private Automatic Branch Exchange), we suggest that you contact the company that installed your telephone system and ask them to connect the fax machine for you.

Brother does not recommend the use of a PABX line. PABX limitations in general can cause some functions of the fax machine not to work correctly.

Related Information

- Telephone Services and External Devices

Fax Reports

The Transmission Verification Report and the Fax Journal are available to confirm the results of fax transmission.

- Print a Transmission Verification Report
- Print a Fax Journal

Print a Transmission Verification Report

Related Models: MFC-L5700DN/MFC-L5755DW/MFC-L5900DW/MFC-L6700DW/MFC-L6900DW

You can use the Transmission Verification Report as proof that you sent a fax. This report lists the receiving party's name or fax number, the time and date of transmission, duration of transmission, number of pages sent, and whether or not the transmission was successful.

There are several settings available for the Transmission Verification Report:

On	Prints a report after every fax you send.
On+Image	Prints a report after every fax you send. A portion of the fax's first page appears on the report.
Off	Prints a report if your fax is unsuccessful due to a transmission error. Off is the factory setting.
Off+Image	Prints a report if your fax is unsuccessful due to a transmission error. A portion of the fax's first page appears on the report.
No Report	Your Brother machine does not print any reports after sending faxes.

1. Press [Settings] > [All Settings] > [Fax] > [Report Setting] > [XMIT Report].
2. Swipe up or down or press ▲ or ▼ to select the option you want, and then press it.

   If you select [On+Image] or [Off+Image], the image will not appear on the Transmission Verification Report if Real Time Transmission is set to [On].
3. Press .

   If the transmission is successful, OK appears next to RESULT on the Transmission Verification Report. If the transmission is not successful, NG appears next to RESULT.

Related Information

- Fax Reports

Print a Fax Journal

Related Models: MFC-L5700DN/MFC-L5755DW/MFC-L5900DW/MFC-L6700DW/MFC-L6900DW

You can set the machine to print a Fax Journal at specific intervals (every 50 faxes, 6, 12 or 24 hours, 2 or 7 days).

1. Press [Settings] > [All Settings] > [Fax] > [Report Setting] > [Journal Period] > [Journal Period].
2. Swipe up or down or press ▲ or ▼ to select an interval, and then press it.
   - Every 6, 12, 24 hours, 2 or 7 days

     The machine will print the report at the selected time and then erase all reception and transmission log data from its memory. If the machine's memory becomes full with 200 log data before the time you selected has passed, the machine will print the Journal early and then erase all jobs from the memory. If you want an extra report before it is due to print, you can print it without erasing the log data from the memory.
   - Every 50 Faxes

     The machine will print the Journal when the machine has stored 50 reception and transmission log data.
3. If you selected every 6, 12, 24 hours, 2 or 7 days, press [Time] and enter the time to start printing (in 24-hour format) using the LCD, and then press [OK]. (For example: enter 19:45 for 7:45 PM.)
4. If you selected [Every 7 Days], press [Day].
5. Swipe up or down or press ▲ or ▼ to display the [Every Monday], [Every Tuesday], [Every Wednesday], [Every Thursday], [Every Friday], [Every Saturday] or [Every Sunday] option, and then press the first day of the 7-day countdown.
6. Press .

Related Information

- Fax Reports

PC-FAX

- PC-FAX for Windows
- PC-FAX for Mac

PC-FAX for Windows

- PC-FAX Overview (Windows)
- Send a Fax Using PC-FAX (Windows)
- Receive Faxes on Your Computer (Windows)

PC-FAX Overview (Windows)

Reduce paper consumption and save time by using Brother's PC-FAX software to send faxes directly from your machine.

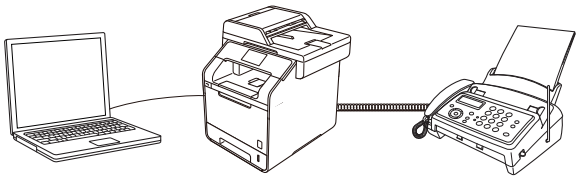

- Configure PC-FAX (Windows)
- Configure your PC-Fax Address Book (Windows)

Configure PC-FAX (Windows)

Related Models: MFC-L5700DN/MFC-L5755DW/MFC-L5900DW/MFC-L6700DW/MFC-L6900DW

Before sending faxes using PC-FAX, personalise the send options in each tab of the **PC-FAX Setup** dialog box.

1. Do one of the following:
   - (Windows XP, Windows Vista and Windows 7)

     Click **(Start)** > **All Programs** > **Brother** > **Brother Utilities**.

     Click the drop-down list and select your model name (if not already selected). Click **PC-FAX** in the left navigation bar, and then click **Setup Sending**.
   - (Windows 8)

     Click (**Brother Utilities**), and then click the drop-down list and select your model name (if not already selected). Click **PC-FAX** in the left navigation bar, and then click **Setup Sending**.

   The **PC-FAX Setup** dialog box appears.

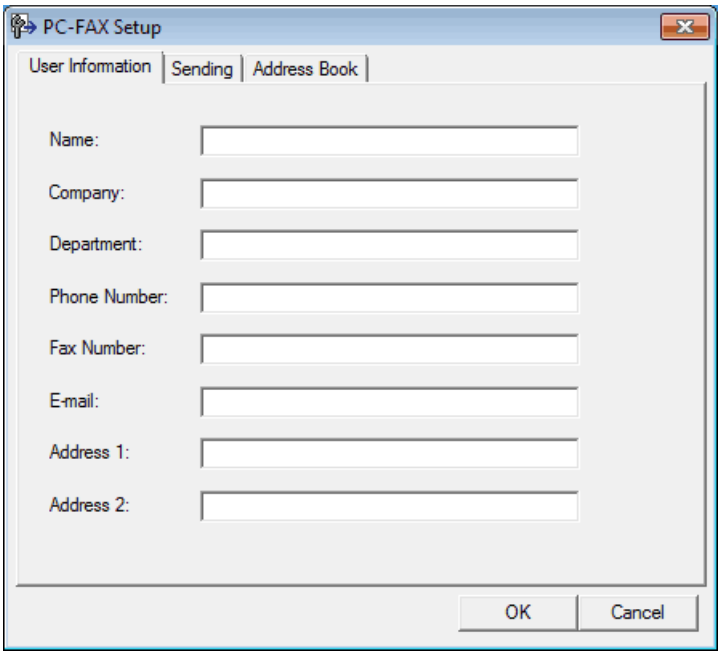

2. Do one of the following:
   - Click the **User Information** tab, and then type your user information in the fields.

   Each Microsoft account can have its own customised **User Information** screen for custom fax headers and cover pages.

   - Click the **Sending** tab, and then type the number needed to access an outside line (if needed) in the **Outside line access** field. Select the **Include header** check box to include the header information.
   - Click the **Address Book** tab, and then select the address book you want to use for PC-FAX from the **Select Address Book** drop-down list.
3. Click **OK**.

Related Information

- PC-FAX Overview (Windows)
- Transfer Faxes to Your Computer

Configure your PC-Fax Address Book (Windows)

Add, edit and delete members and groups to personalise your Brother **Address Book**.

- Add a Member to the Address Book (Windows)
- Create a Group in the Address Book (Windows)
- Edit Member or Group Information (Windows)
- Delete a Member or Group (Windows)
- Export the Address Book (Windows)
- Import Information to the Address Book (Windows)

Add a Member to the Address Book (Windows)

Related Models: MFC-L5700DN/MFC-L5755DW/MFC-L5900DW/MFC-L6700DW/MFC-L6900DW

Add new people and their fax information to the PC-Fax Address Book if you want to send a fax using Brother PC-Fax software.

1. Do one of the following:
   - (Windows XP, Windows Vista and Windows 7)

     Click **(Start)** > **All Programs** > **Brother** > **Brother Utilities**.

     Click the drop-down list and select your model name (if not already selected). Click **PC-FAX** in the left navigation bar, and then click **Address Book (Send)**.
   - (Windows 8)

     Click (**Brother Utilities**), and then click the drop-down list and select your model name (if not already selected). Click **PC-FAX** in the left navigation bar, and then click **Address Book (Send)**.

   The **Address Book** dialog box appears.

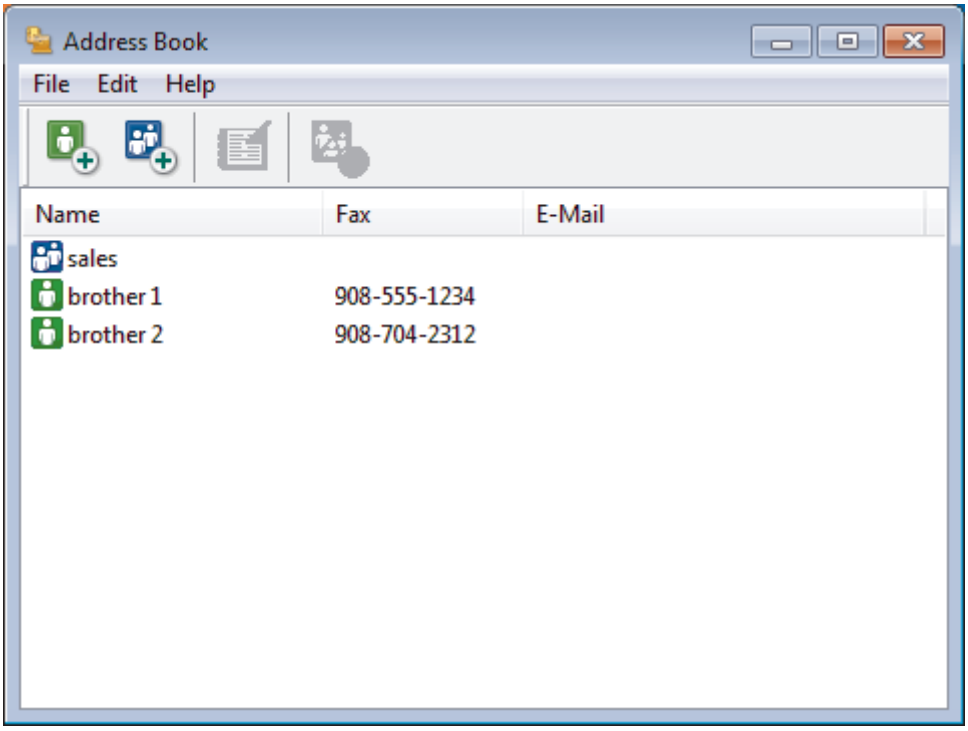

2. Click .

   The **Address Book Member Setup** dialog box appears.

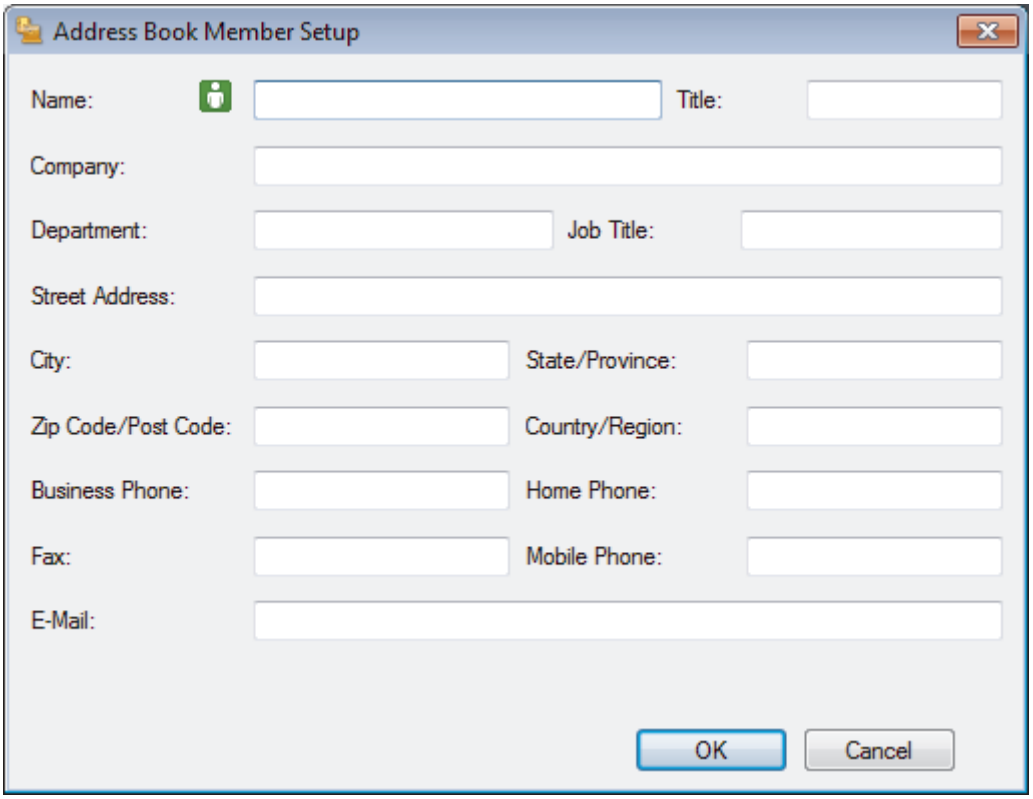

3. Type the member's information in the corresponding fields. Only the **Name** field is required.
4. Click **OK**.

Related Information

- Configure your PC-Fax Address Book (Windows)

Create a Group in the Address Book (Windows)

Related Models: MFC-L5700DN/MFC-L5755DW/MFC-L5900DW/MFC-L6700DW/MFC-L6900DW

Create a group to broadcast the same PC-FAX to several recipients at one time.

1. Do one of the following:
   - (Windows XP, Windows Vista and Windows 7)

     Click **(Start)** > **All Programs** > **Brother** > **Brother Utilities**.

     Click the drop-down list and select your model name (if not already selected). Click **PC-FAX** in the left navigation bar, and then click **Address Book (Send)**.
   - (Windows 8)

     Click (**Brother Utilities**), and then click the drop-down list and select your model name (if not already selected). Click **PC-FAX** in the left navigation bar, and then click **Address Book (Send)**.

   The **Address Book** dialog box appears.

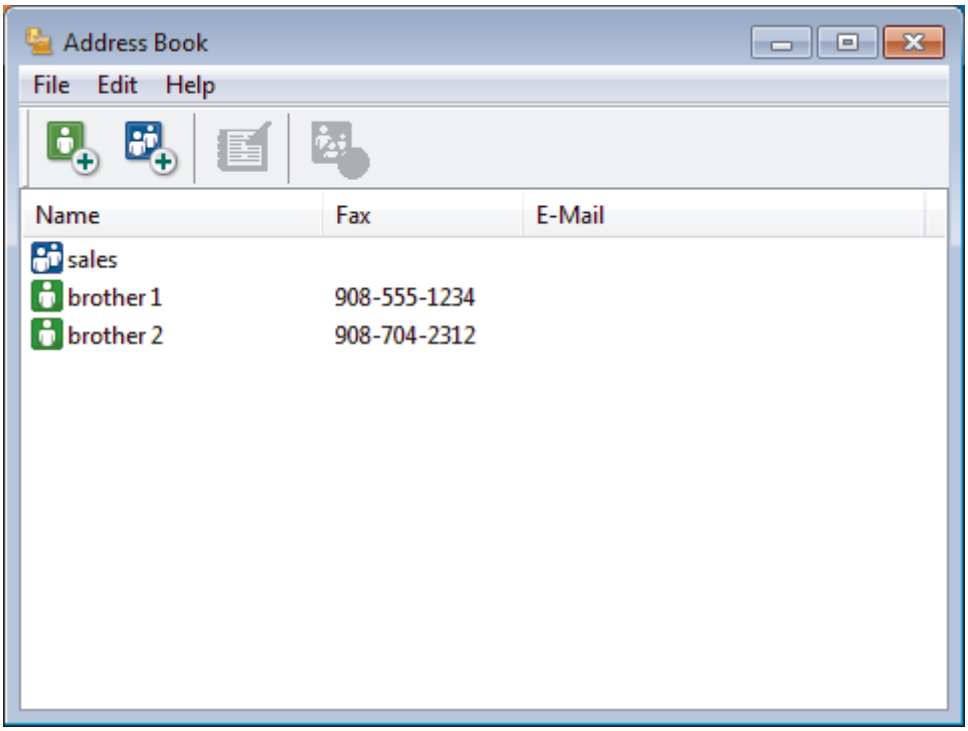

2. Click .

   The **Address Book Group Setup** dialog box appears.

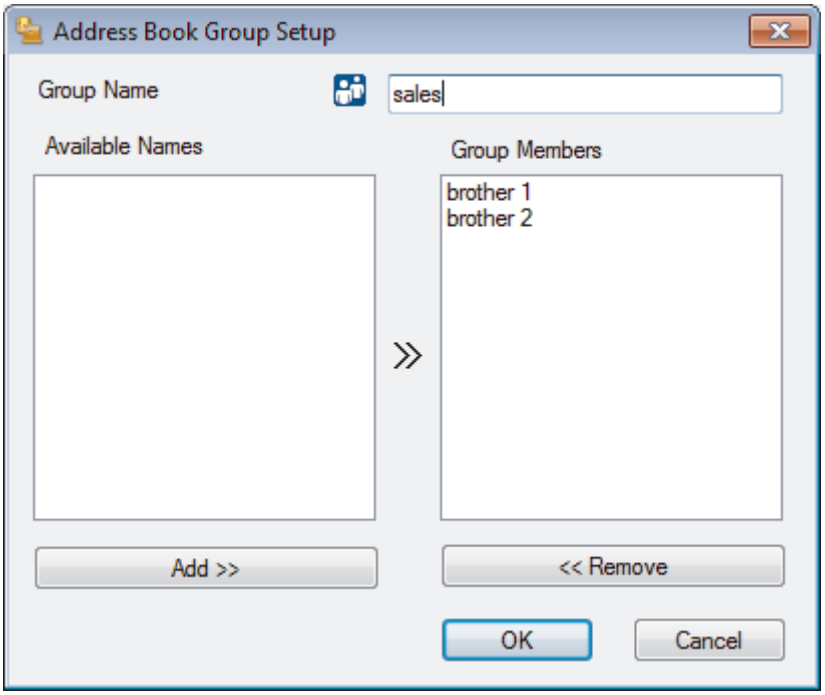

3. Type the name of the new group in the **Group Name** field.
4. In the **Available Names** field, select each name you want to include in the group, and then click **Add >>**. Members added to the group appear in the **Group Members** box.
5. When finished, click **OK**.

Each group can contain up to 50 members.

Related Information

- Configure your PC-Fax Address Book (Windows)

Edit Member or Group Information (Windows)

Related Models: MFC-L5700DN/MFC-L5755DW/MFC-L5900DW/MFC-L6700DW/MFC-L6900DW

1. Do one of the following:
   - (Windows XP, Windows Vista and Windows 7)

     Click **(Start)** > **All Programs** > **Brother** > **Brother Utilities**.

     Click the drop-down list and select your model name (if not already selected). Click **PC-FAX** in the left navigation bar, and then click **Address Book (Send)**.
   - (Windows 8)

     Click (**Brother Utilities**), and then click the drop-down list and select your model name (if not already selected). Click **PC-FAX** in the left navigation bar, and then click **Address Book (Send)**.

   The **Address Book** dialog box appears.

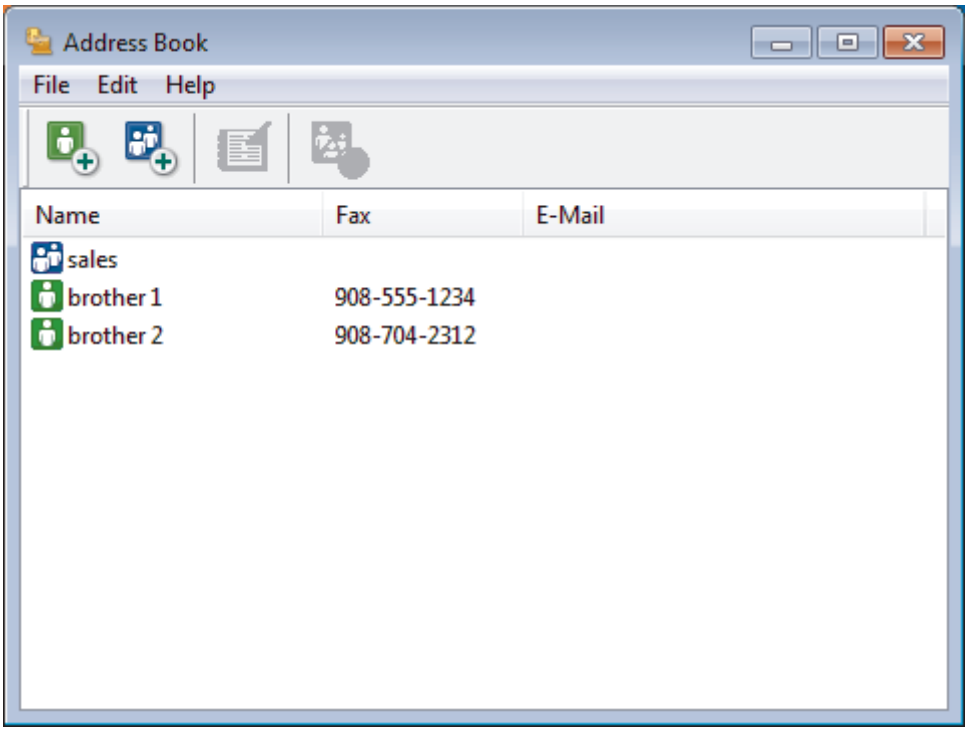

2. Select the member or group you want to edit.
3. Click (**Properties**).
4. Change the member or group information.
5. Click **OK**.

Related Information

- Configure your PC-Fax Address Book (Windows)

Delete a Member or Group (Windows)

Related Models: MFC-L5700DN/MFC-L5755DW/MFC-L5900DW/MFC-L6700DW/MFC-L6900DW

1. Do one of the following:
   - (Windows XP, Windows Vista and Windows 7)

     Click **(Start)** > **All Programs** > **Brother** > **Brother Utilities**.

     Click the drop-down list and select your model name (if not already selected). Click **PC-FAX** in the left navigation bar, and then click **Address Book (Send)**.
   - (Windows 8)

     Click (**Brother Utilities**), and then click the drop-down list and select your model name (if not already selected). Click **PC-FAX** in the left navigation bar, and then click **Address Book (Send)**.

   The **Address Book** dialog box appears.

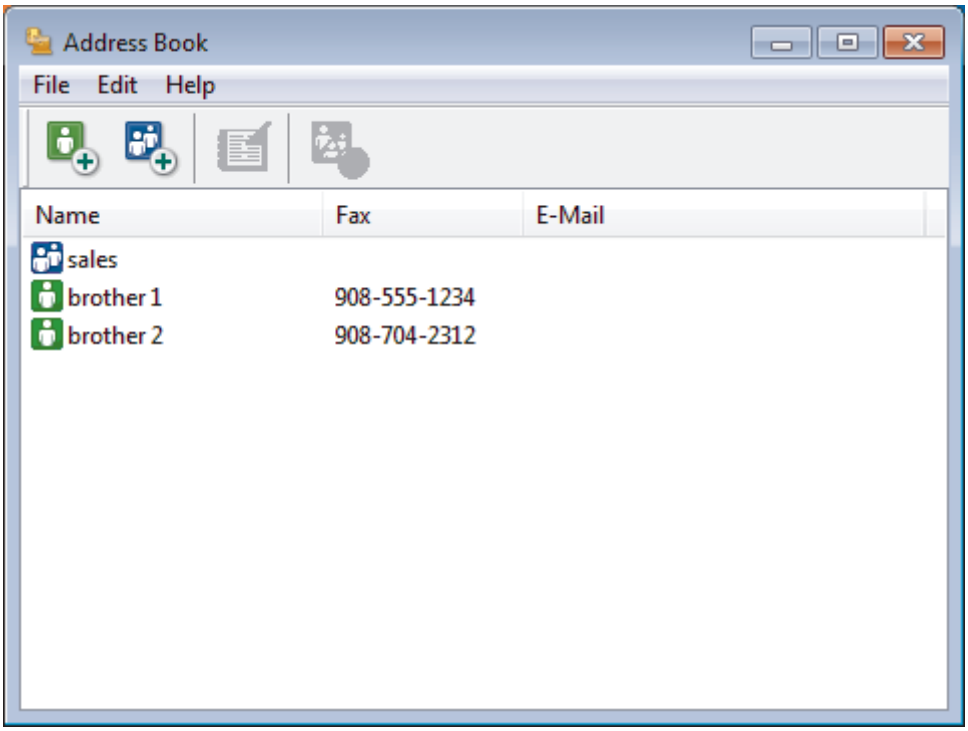

2. Select the member or group you want to delete.
3. Click (**Delete**).
4. When the confirmation dialog box appears, click **OK**.

Related Information

- Configure your PC-Fax Address Book (Windows)

Export the Address Book (Windows)

Related Models: MFC-L5700DN/MFC-L5755DW/MFC-L5900DW/MFC-L6700DW/MFC-L6900DW

You can export the Address Book as an ASCII text file (*.csv), a vCard (an electronic business card), or **Remote Setup Dial Data** and save it on your computer.

- You cannot export the group settings when you export the **Address Book** data.

1. Do one of the following:
   - (Windows XP, Windows Vista and Windows 7)

     Click **(Start)** > **All Programs** > **Brother** > **Brother Utilities**.

     Click the drop-down list and select your model name (if not already selected). Click **PC-FAX** in the left navigation bar, and then click **Address Book (Send)**.
   - (Windows 8)

     Click (**Brother Utilities**), and then click the drop-down list and select your model name (if not already selected). Click **PC-FAX** in the left navigation bar, and then click **Address Book (Send)**.

   The **Address Book** dialog box appears.

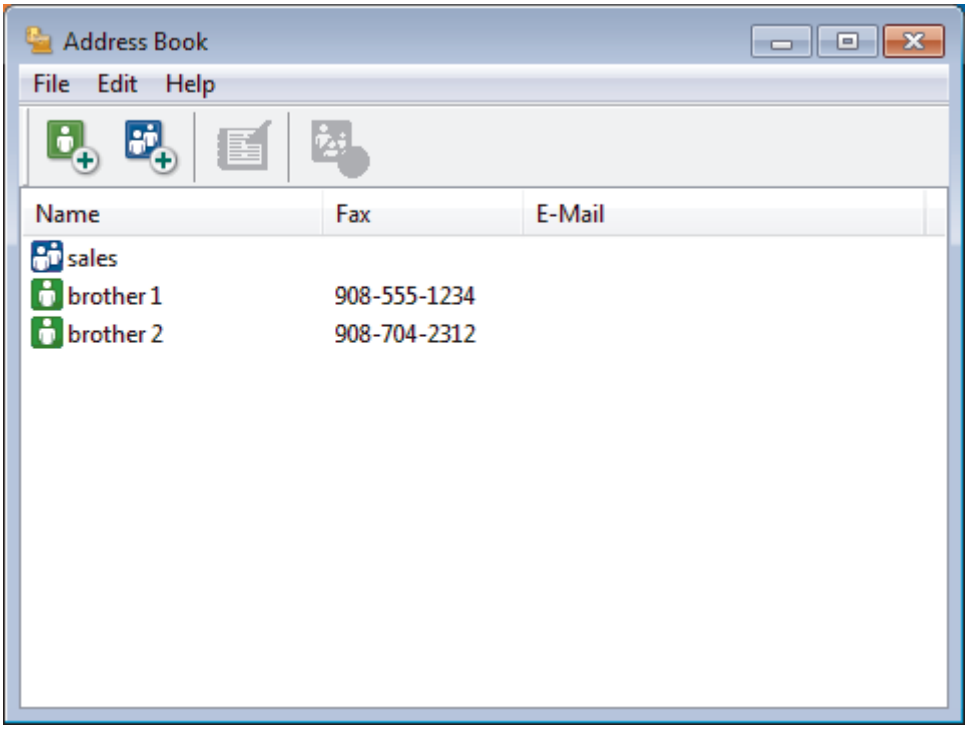

2. Click the **File** menu, and then select **Export**.
3. Select one of the following:
   - **Text**

     The **Select Items** dialog box appears. Go to step 4.
   - **vCard**

     You must select the member you want to export from your address book before selecting this option.

     Browse to the folder where you want to save the vCard, type the vCard name in the **File name** field, and then click **Save**.
   - **Remote Setup Dial Data**

     Browse to the folder where you want to save the data, type the file name in the **File name** field, and then click **Save**.

4. In the **Available Items** field, select the data you want to export, and then click **Add >>**.

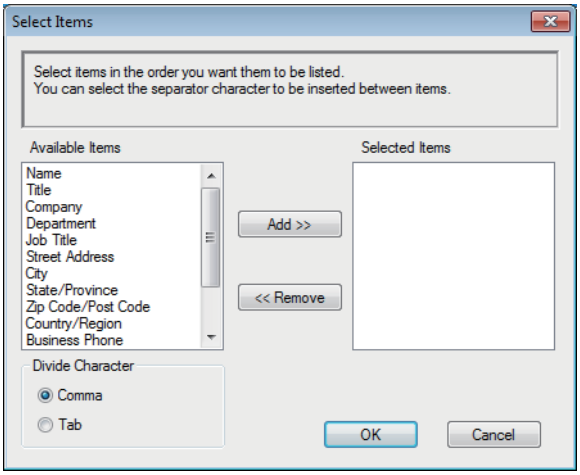

Select and add the items in the order you want them listed.

5. If you are exporting to an ASCII file, under the **Divide Character** section, select the **Tab** or **Comma** option to separate the data fields.
6. Click **OK**.
7. Browse to the folder on your computer where you want to save the data, type the file name, and then click **Save**.

Related Information

- Configure your PC-Fax Address Book (Windows)

Import Information to the Address Book (Windows)

Related Models: MFC-L5700DN/MFC-L5755DW/MFC-L5900DW/MFC-L6700DW/MFC-L6900DW

You can import ASCII text files (*.csv), vCards (electronic business cards), or **Remote Setup Dial Data** into your Address Book.

1. Do one of the following:
   - (Windows XP, Windows Vista and Windows 7)

     Click **(Start)** > **All Programs** > **Brother** > **Brother Utilities**.

     Click the drop-down list and select your model name (if not already selected). Click **PC-FAX** in the left navigation bar, and then click **Address Book (Send)**.
   - (Windows 8)

     Click (**Brother Utilities**), and then click the drop-down list and select your model name (if not already selected). Click **PC-FAX** in the left navigation bar, and then click **Address Book (Send)**.

   The **Address Book** dialog box appears.

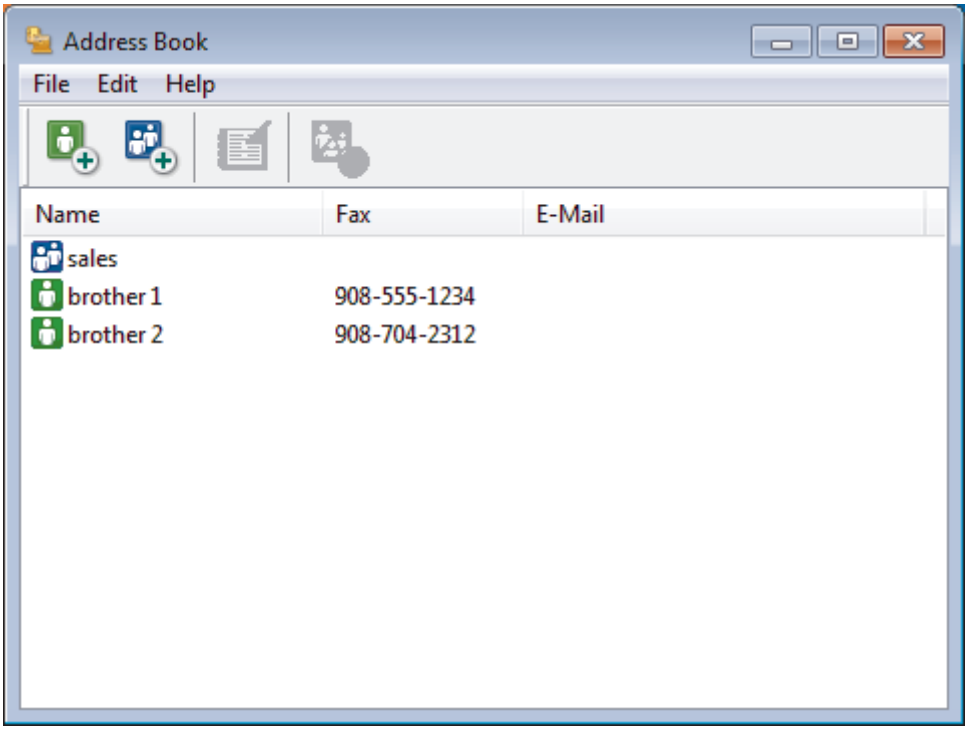

2. Click the **File** menu, and then select **Import**.
3. Select one of the following:
   - **Text**

     The **Select Items** dialog box appears. Go to step 4.
   - **vCard**

     Go to step 7.
   - **Remote Setup Dial Data**

     Go to step 7.
4. In the **Available Items** field, select the data you want to import, and then click **Add >>**.

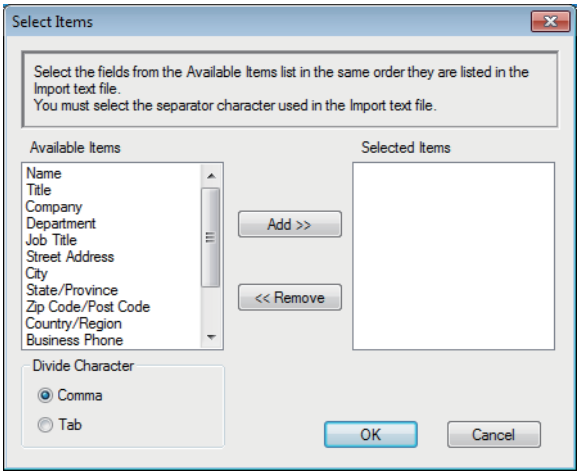

You must select and add fields from the **Available Items** list in the same order they are listed in the import text file.

5. If you are importing an ASCII file, under the **Divide Character** section, select the **Tab** or **Comma** option to separate the data fields.
6. Click **OK**.
7. Browse to the folder where you want to import the data, type the file name, and then click **Open**.

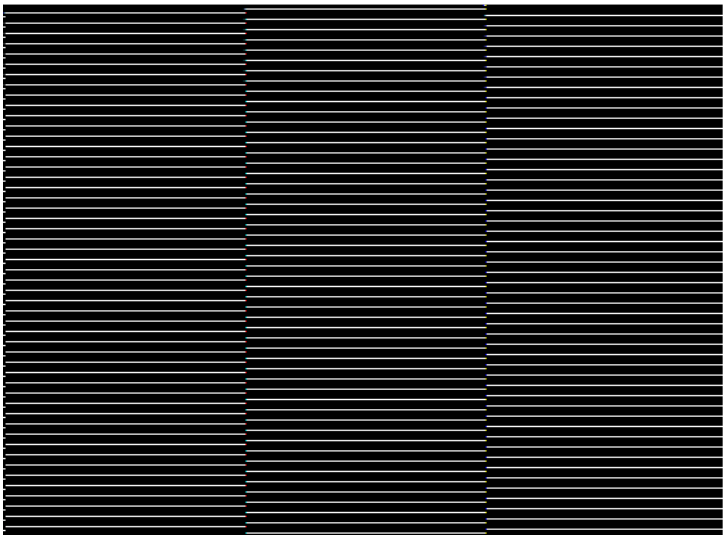

Related Information

- Configure your PC-Fax Address Book (Windows)

Send a Fax Using PC-FAX (Windows)

Related Models: MFC-L5700DN/MFC-L5755DW/MFC-L5900DW/MFC-L6700DW/MFC-L6900DW

PC-FAX supports only monochrome faxes. A monochrome fax will be sent even if the original data is colour and the receiving fax machine supports colour faxes.

1. Create a file in any application on your computer.
2. Select the print command in your application.
3. Select **Brother PC-FAX** as your printer, and then complete your print operation.

   The **BrotherPC-FAX** dialog box appears.

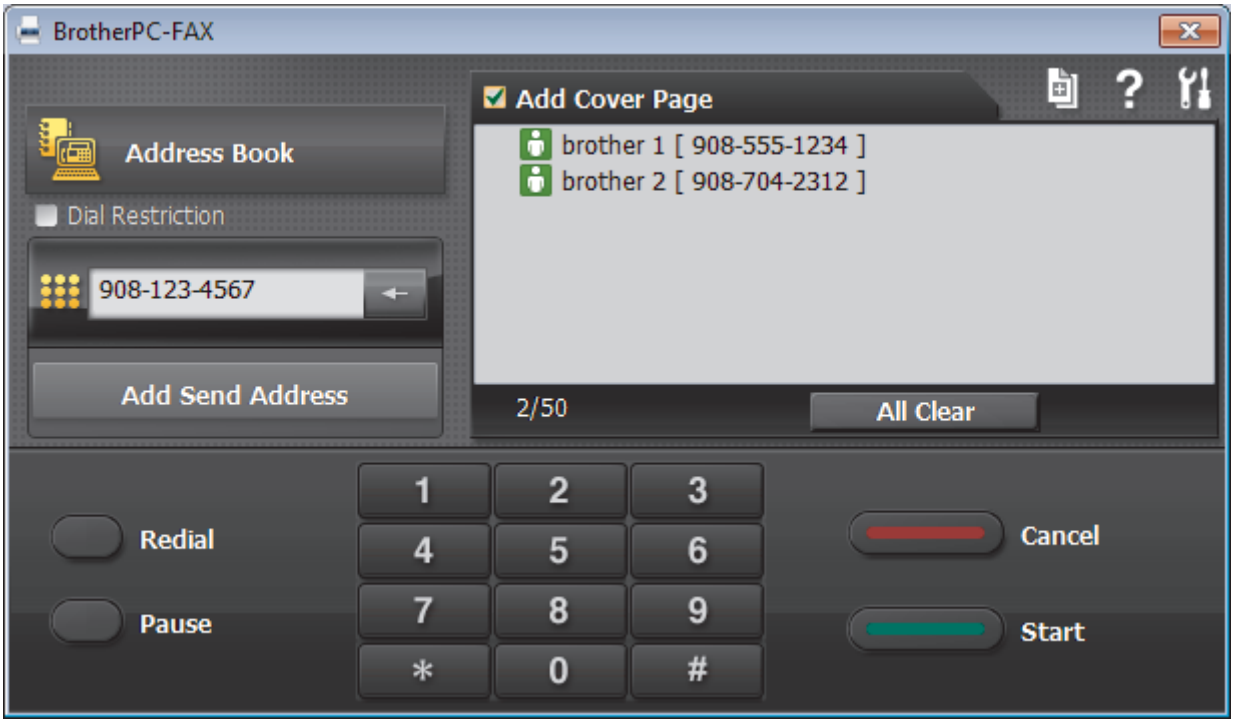

4. Type a fax number using one of the following methods:
   - Click the numbers on the dial pad to type the number, and then click **Add Send Address**.

   If you select the **Dial Restriction** check box, a confirmation dialog box will appear for you to re-type the fax number using the keyboard. This feature helps to prevent transmissions to the wrong destination.

   - Click the **Address Book** button, and then select a member or group from the Address Book.

   If you make a mistake, click **All Clear** to delete all entries.

5. To include a cover page, select the **Add Cover Page** check box. You can also click to create or edit a cover page.
6. Click **Start** to send the fax.

   - To cancel the fax, click **Cancel**.
   - To redial a number, click **Redial** to show the last five fax numbers, select a number, and then click **Start**.

Related Information

- PC-FAX for Windows

Receive Faxes on Your Computer (Windows)

Use Brother's PC-FAX software to receive faxes on your computer, screen them and print only those faxes you want.

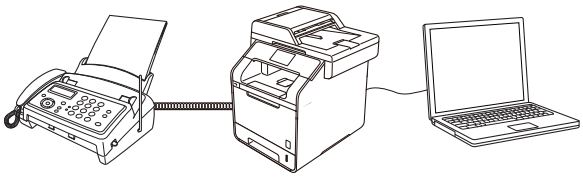

- Receive Faxes Using PC-FAX Receive (Windows)

Receive Faxes Using PC-FAX Receive (Windows)

Related Models: MFC-L5700DN/MFC-L5755DW/MFC-L5900DW/MFC-L6700DW/MFC-L6900DW

Brother's PC-FAX Receive software lets you view and store faxes on your computer. It is automatically installed when you install the Brother software and drivers and works on locally or network-connected machines.

- PC-FAX Receive supports only monochrome faxes.

When you turn off your computer, your machine will continue to receive and store faxes in your Brother machine's memory. The machine's LCD will display the number of stored faxes received. When you start this application, the software will transfer all received faxes to your computer at once. You can enable the Backup Print option if you want the machine to print a copy of the fax before the fax is sent to your computer, or before the computer is switched off. You can configure the Backup Print settings from your Brother machine.

Related Information

- Receive Faxes on Your Computer (Windows)
- Run Brother's PC-FAX Receive on Your Computer (Windows)
- View Received Messages (Windows)
- Use PC-Fax Receive to Transfer Received Faxes to Your Computer (Windows only)

Run Brother's PC-FAX Receive on Your Computer (Windows)

Related Models: MFC-L5700DN/MFC-L5755DW/MFC-L5900DW/MFC-L6700DW/MFC-L6900DW

We recommend selecting the **Start PC-FAX Receive on computer startup** check box so that the software runs automatically and can transfer any faxes upon computer startup.

1. Do one of the following:
   - (Windows XP, Windows Vista and Windows 7)

     Click **(Start)** > **All Programs** > **Brother** > **Brother Utilities**.

     Click the drop-down list and select your model name (if not already selected). Click **PC-FAX** in the left navigation bar, and then click **Receive**.
   - (Windows 8)

     Click (**Brother Utilities**), and then click the drop-down list and select your model name (if not already selected). Click **PC-FAX** in the left navigation bar, and then click **Receive**.
2. Confirm the message and click **Yes**.

   The **PC-FAX Receive** window appears. The (**PC-Fax Receive (Ready)**) icon also appears in your computer task tray.

Related Information

- Receive Faxes Using PC-FAX Receive (Windows)
- Set Up Your Computer for PC-FAX Receiving (Windows)
- Add Your Brother Machine to PC-FAX Receiving (Windows)

Set Up Your Computer for PC-FAX Receiving (Windows)

Related Models: MFC-L5700DN/MFC-L5755DW/MFC-L5900DW/MFC-L6700DW/MFC-L6900DW

1. Double-click the (**PC-Fax Receive (Ready)**) icon in your computer task tray.

   The **PC-FAX Receive** window appears.
2. Click **Settings**.
3. Configure these options as needed:

   Preferences

   Configure to start PC-FAX Receive automatically when you start Windows.

   Save

   Configure the path to save PC-FAX files and select the received document format.

   Upload to

   Configure the path to the SharePoint server and select the option to upload automatically or manually (available only for Administrators).

   Device

   Select the Brother machine that you want to receive PC-FAX.

   Lock (available only for Administrators)

   Restrict users who do not have administrator privileges from configuring the settings options shown above.

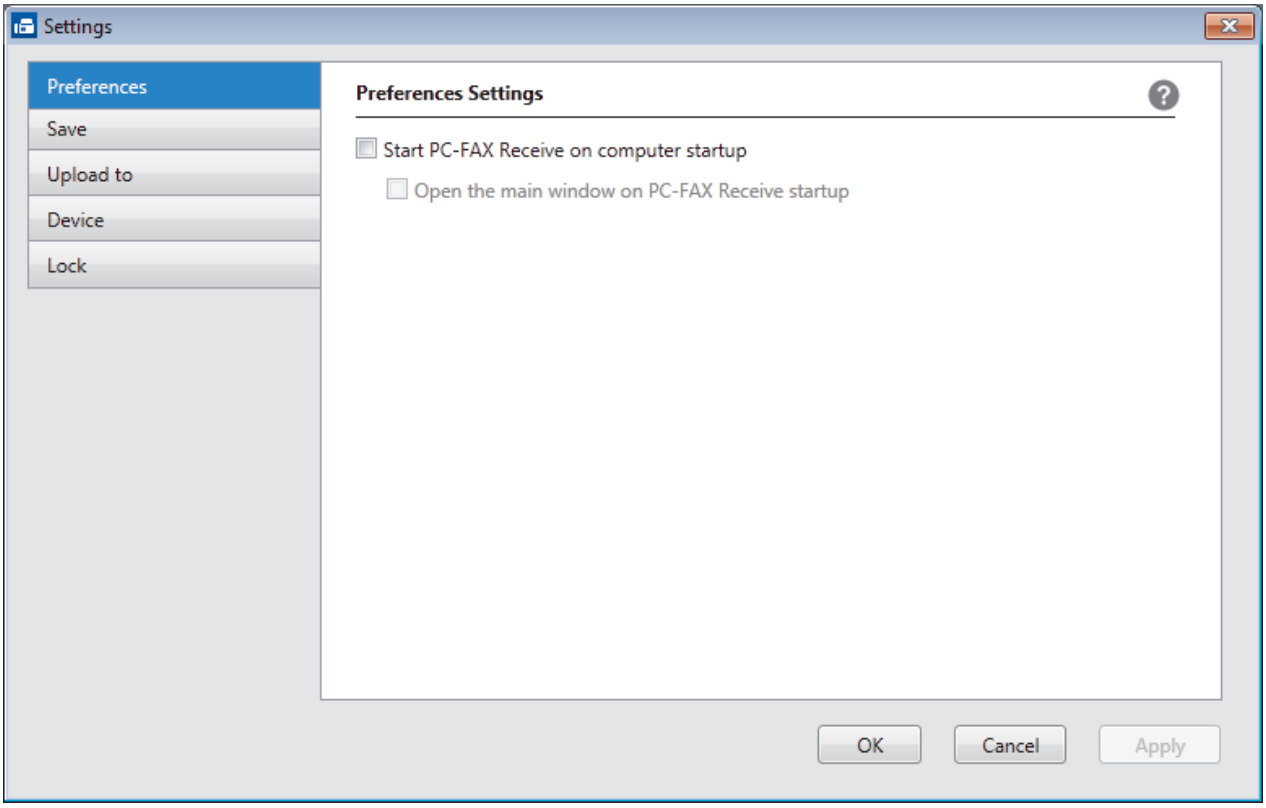

4. Click **OK**.

Related Information

- Run Brother's PC-FAX Receive on Your Computer (Windows)

Add Your Brother Machine to PC-FAX Receiving (Windows)

Related Models: MFC-L5700DN/MFC-L5755DW/MFC-L5900DW/MFC-L6700DW/MFC-L6900DW

- If you installed the machine following the instructions for a network user, then the machine should already be configured for your network.

1. Double-click the (**PC-Fax Receive (Ready)**) icon in your computer task tray.

   The **PC-FAX Receive** window appears.
2. Click **Settings**.
3. Click **Device** > **Add**.

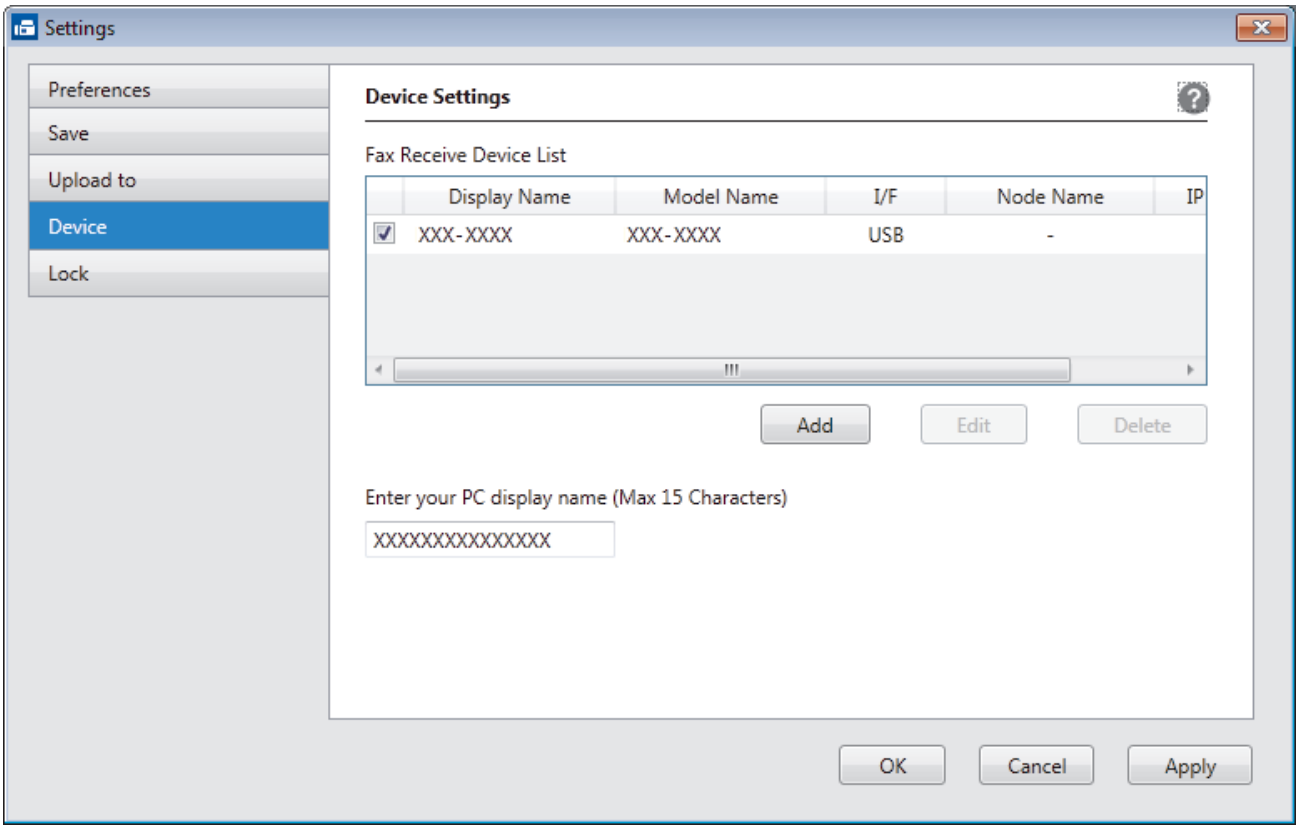

4. Select the appropriate connection method.

   Select your machine from the automatic search results below.

   Connected Brother machines will be displayed. Select a device from the list. Click **OK**.

   Specify your machine by IP address

   Type the machine's IP address in the **IP Address** field, and then click **OK**.

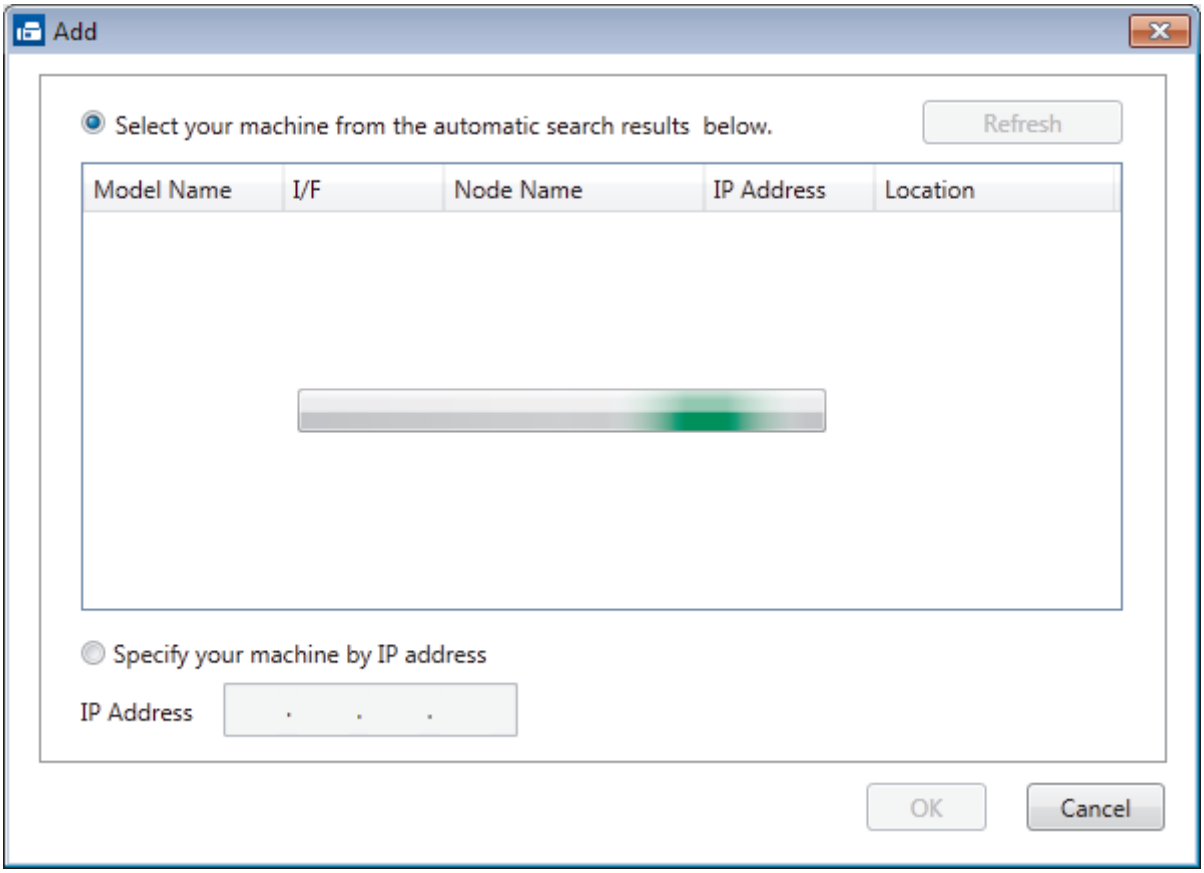

5. To change the computer name that will appear on the machine's LCD, type the new name in the **Enter your PC display name (Max 15 Characters)** field.
6. Click **OK**.

Related Information

- Run Brother's PC-FAX Receive on Your Computer (Windows)

View Received Messages (Windows)

Related Models: MFC-L5700DN/MFC-L5755DW/MFC-L5900DW/MFC-L6700DW/MFC-L6900DW

Receiving Status

Icon	Indicated Status
	Standby mode No unread messages
	Receiving messages
	Messages received Unread messages

1. Double-click the (**PC-Fax Receive (Ready)**) icon in your computer task tray.

   The **PC-FAX Receive** window appears.

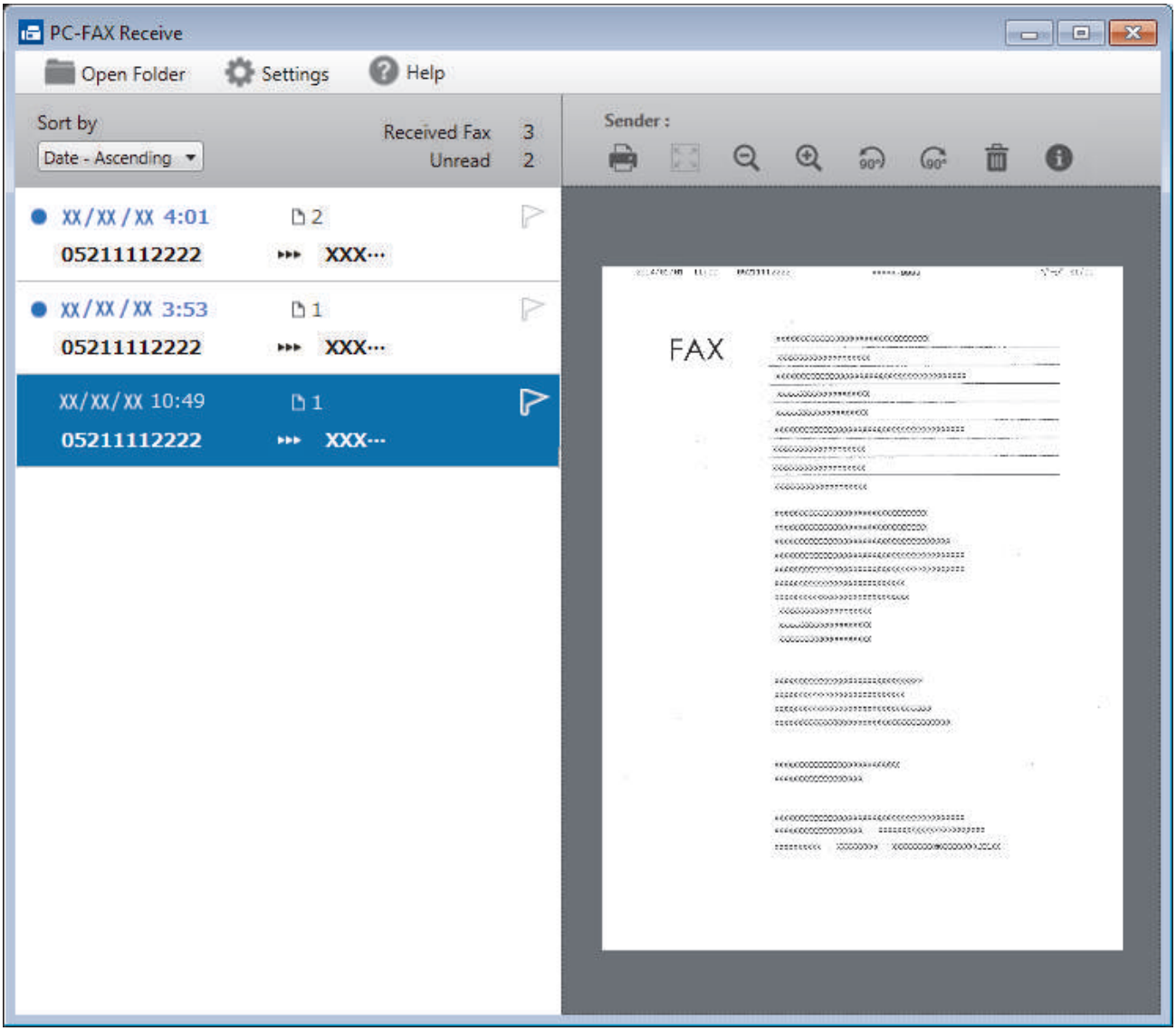

2. Click any faxes in the list to view them.
3. When finished, click in the right top corner of the window to close it.

Even after closing the window, PC-FAX Receive is active and the (**PC-Fax Receive (Ready)**) icon will remain in your computer task tray. To close PC-FAX Receive, click the icon in the computer task tray and click **Close**.

Related Information

- Receive Faxes Using PC-FAX Receive (Windows)

PC-FAX for Mac

Use Brother's PC-FAX software to send faxes directly from your Mac without printing them. This feature helps reduce your paper consumption and save time.

- Send Faxes from Your Application (Mac)

Send Faxes from Your Application (Mac)

Related Models: MFC-L5700DN/MFC-L5755DW/MFC-L5900DW/MFC-L6700DW/MFC-L6900DW

PC-FAX supports only monochrome faxes. A monochrome fax will be sent even if the original data is colour and the receiving fax machine supports colour faxes.

1. Create a document in a Mac application.
2. From an application, such as Apple TextEdit, click the **File** menu, and then select **Print**.
3. Click the application pop-up menu, and then select the **Send Fax** option.

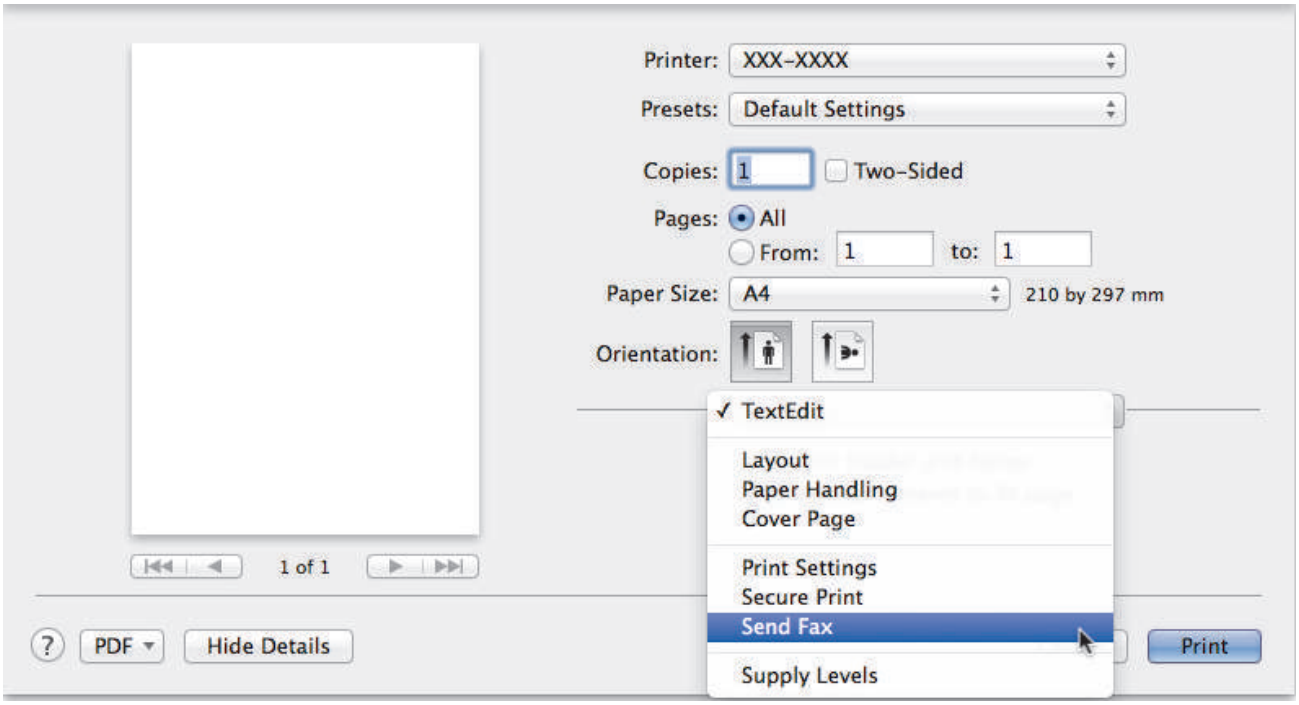

4. Click the **Output** pop-up menu, and then select the **Facsimile** option.

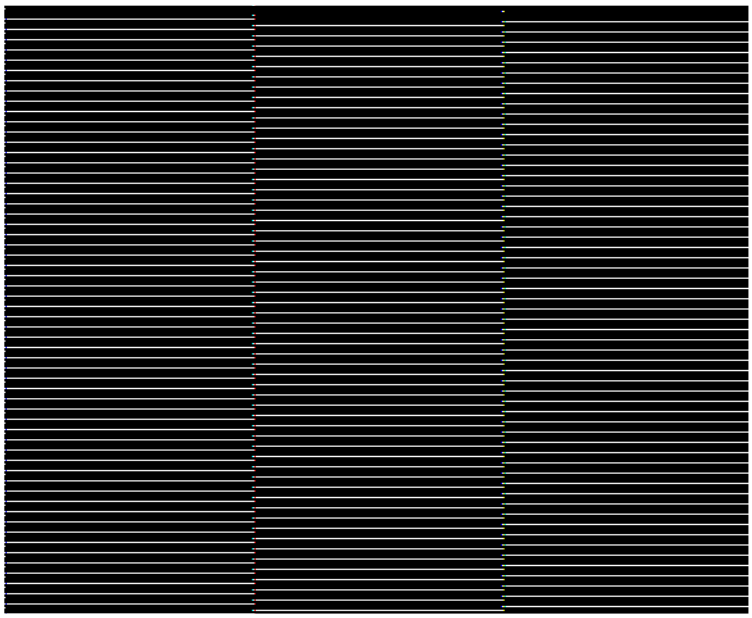

5. Type a fax number in the **Input Fax Number** field, and then click **Add**.

   The fax number is displayed in the **Destination Fax Numbers** field.

To send a fax to more than one number, click the **Add** button after entering the first fax number and type the next fax number. The destination fax numbers will be listed in the **Destination Fax Numbers** field.

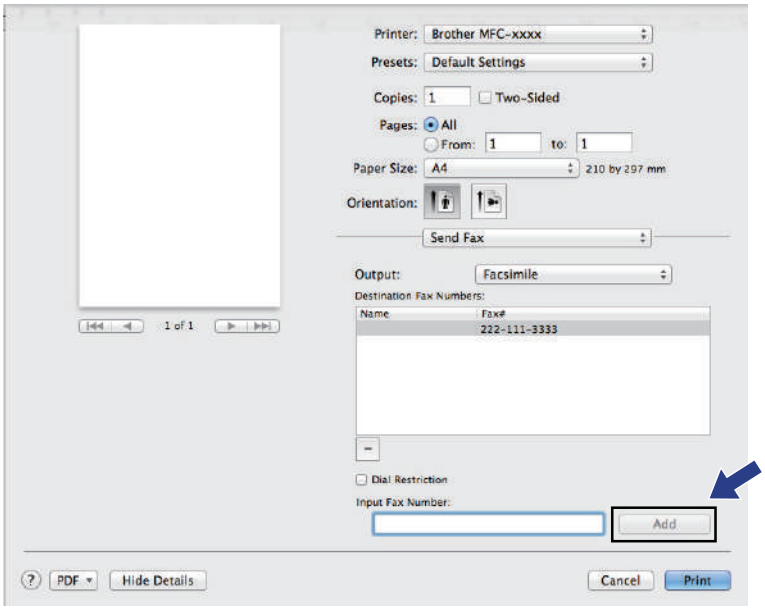

6. Click **Print** to send the fax.

Related Information

- PC-FAX for Mac

Print Data Directly from a USB Flash Drive

You can print photos directly from digital camera media or a USB flash drive, or scan documents and save them directly to a USB flash drive.

Supported file types are PDF, JPEG, TIFF, XPS, and PRN.

- Compatible USB Flash Drives
- Print Data Directly from a USB Flash Drive or Digital Camera Supporting Mass Storage
- Create a PRN File for Direct Printing (Windows)

Compatible USB Flash Drives

IMPORTANT

The USB direct interface supports only USB flash drives, PictBridge-compatible cameras and digital cameras that use the USB mass storage standard. Other USB devices are not supported.

Compatible USB Flash Drives	
USB Class	USB Mass Storage Class
USB Mass Storage Sub Class	SCSI or SFF-8070i
Transfer protocol	Bulk transfer Only
Format [1]	FAT12/FAT16/FAT32/exFAT
Sector size	Max. 4096 Byte
Encryption	Encrypted devices are not supported.

Related Information

- Print Data Directly from a USB Flash Drive

[1] NTFS format is not supported.

Print Data Directly from a USB Flash Drive or Digital Camera Supporting Mass Storage

- Make sure your digital camera is turned on.
- Your digital camera must be switched from PictBridge mode to mass storage mode.

IMPORTANT

To prevent damage to your machine, DO NOT connect any device other than a digital camera or USB flash drive to the USB direct interface.

1. Connect your USB flash drive or digital camera to the USB direct interface on the front of the machine. The touchscreen will automatically display the USB menu to confirm the USB flash drive or digital camera is correctly connected.

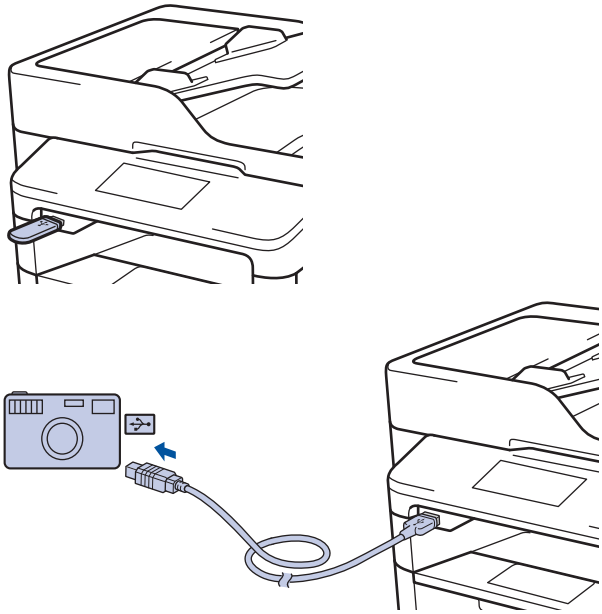

- If an error occurs, the USB menu will not appear on the touchscreen.
- When the machine is in Deep Sleep mode, the touchscreen does not display any information even if you connect a USB flash drive to the USB direct interface. Press the touchscreen to wake up the machine.

2. Press [Direct Print].

If your machine has been set to Secure Function Lock On, you may not be able to access Direct Print.

3. Swip up or down, or press ▲ or ▼ to display the file you want to print, and then select the file.

To print an index of the files, press [Index Print] on the touchscreen. Press [Yes] to print the data.

4. Do one of the following:
   - To change the settings, press [Print Settings]. Go to the next step.
   - If you want to use the default settings, enter the number of copies, and then press [Start].
5. Select the print settings you want to change:
   - [Paper Type]
   - [Paper Size]

- [Multiple Page]
- [Orientation]
- [2-sided]
- [Collate]
- [Tray Use]
- [Print Quality]
- [PDF Option]

NOTE

Depending on the file type, some of these settings may not appear.

6. Press [OK].
7. Enter the number of copies you want.
8. Press [Start] to print the data.
9. Press .

IMPORTANT

DO NOT remove the USB flash drive or digital camera from the USB direct interface until the machine has finished printing.

Related Information

- Print Data Directly from a USB Flash Drive

Create a PRN File for Direct Printing (Windows)

These instructions may vary depending on your print application and operating system.

1. Select the print command in your application.
2. Select your model, and then select the print to file option.
3. Complete your print operation.
4. Enter the required information to save the file.

If the computer prompts you to enter a file name only, you can also specify the folder where you want to save the file by typing the directory name (for example: C:\Temp\FileName.prn).

If a USB flash drive is connected to your computer, you can save the file directly to the USB flash drive.

Related Information

- Print Data Directly from a USB Flash Drive

Network

- Get Started
- Network Management Software and Utilities
- Additional Methods of Configuring Your Brother Machine for a Wireless Network
- Advanced Network Features
- Technical Information for Advanced Users

Get Started

We recommend setting up and connecting to your network using the Brother installation CD-ROM. This section provides more information about network connection types, introduces various methods to manage your network and explains some useful network features of your Brother machine.

- Supported Basic Network Features

Supported Basic Network Features

The print server supports various features depending on the operating system. Use this table to see which network features and connections are supported by each operating system.

Operating Systems	Windows XP Windows Vista Windows 7 Windows 8	Windows Server 2003/2008/2012/2012 R2	OS X v10.8.5 OS X v10.9.x OS X v10.10.x
Printing	Yes	Yes	Yes
Scanning	Yes		Yes
PC Fax Send (Available only for certain models)	Yes		Yes
PC Fax Receive (Available only for certain models)	Yes		
BRAdmin Light	Yes	Yes	
BRAdmin Professional	Yes	Yes	
Web Based Management	Yes	Yes	Yes
Remote Setup (Available only for certain models)	Yes		Yes
Status Monitor	Yes		Yes
Driver Deployment Wizard	Yes	Yes	
Vertical Pairing (Windows 7 and Windows 8 only) (Available only for certain models)	Yes		

- Go to your model's **Downloads** page on the Brother Solutions Center at support.brother.com to download the latest version of Brother's BRAdmin Light.
- Go to your model's **Downloads** page on the Brother Solutions Center at support.brother.com to download the latest version of Brother's BRAdmin Professional utility.

Related Information

- Get Started

Network Management Software and Utilities

Configure and change your Brother machine's network settings using a management utility.

- Learn about Network Management Software and Utilities
- Change Machine Settings from Your Computer
- Change Machine Settings Using Web Based Management

Learn about Network Management Software and Utilities

Web Based Management

Web Based Management is a utility that uses a standard web browser to manage your machine using the Hyper Text Transfer Protocol (HTTP) or Hyper Text Transfer Protocol over Secure Socket Layer (HTTPS). Type your machine's IP address into your web browser to access and change your print server settings.

BRAdmin Light (Windows)

BRAdmin Light is a utility for the initial setup of Brother network-connected devices. This utility can search for Brother products on your network, view the status and configure the basic network settings, such as IP address.

Go to your model's **Downloads** page on the Brother Solutions Center at support.brother.com to download BRAdmin Light.

- If you are using Windows Firewall, or the firewall function of an anti-spyware or antivirus application, temporarily disable them. When you are sure you can print, configure the software settings following the instructions.

BRAdmin Professional (Windows)

BRAdmin Professional is a utility for more advanced management of network-connected Brother devices. This utility can search for Brother products on your network and view the device status from an easy-to-read Windows Explorer-style screen that changes colour to identify the status of each device. You can configure network and device settings, and update device firmware from a Windows computer on your LAN. BRAdmin Professional can also log activity of Brother devices on your network and export the log data in an HTML, CSV, TXT, or SQL format. For users who want to monitor locally-connected machines, install the Print Auditor Client software on the client computer. This utility allows you to use BRAdmin Professional to monitor machines that are connected to a client computer via the USB interface.

- Go to your model's **Downloads** page on the Brother Solutions Center at support.brother.com to download the latest version of Brother's BRAdmin Professional utility.
- Node name: The node name appears in the current BRAdmin Professional window. The default node name is "BRNxxxxxxxxxxxx" for a wired network or "BRWxxxxxxxxxxxx" for a wireless network (where "xxxxxxxxxxxx" is your machine's MAC Address / Ethernet address).
- If you are using Windows Firewall, or the firewall function of an anti-spyware or antivirus application, temporarily disable them. When you are sure you can print, configure the software settings following the instructions.

Remote Setup (Windows and Mac) (Available only for certain models)

Remote Setup is a program for configuring many machine and network settings from either a Windows or a Mac application. When you start this application, the settings on your machine are automatically downloaded to your computer and displayed on your computer screen. If you change the settings, you can upload them directly to the machine.

This utility can be used for either a USB or a network connection.

Related Information

- Network Management Software and Utilities

Additional Methods of Configuring Your Brother Machine for a Wireless Network

To connect your machine to your wireless network, we recommend using the Installation CD-ROM.

- Before Configuring Your Brother Machine for a Wireless Network
- Configure Your Machine for a Wireless Network
- Configure Your Machine for a Wireless Network Using the One Push Method of Wi-Fi Protected Setup™ (WPS)
- Configure Your Machine for a Wireless Network Using the PIN Method of Wi-Fi Protected Setup™ (WPS)
- Configure Your Machine for a Wireless Network in Ad-Hoc Mode (For IEEE 802.11b/g/n)
- Configure Your Machine for a Wireless Network Using the Machine's Control Panel Setup Wizard
- Configure Your Machine for a Wireless Network When the SSID Is Not Broadcast
- Configure Your Machine for an Enterprise Wireless Network
- Use Wi-Fi Direct®

Before Configuring Your Brother Machine for a Wireless Network

Related Models: MFC-L5755DW/MFC-L5900DW/MFC-L6700DW/MFC-L6900DW

Before attempting to configure a wireless network, confirm the following:

- Before configuring wireless settings, you must know your Network name (SSID) and Network Key. If you are using an enterprise wireless network, you must know the User ID and Password.

  If you do not know the security information, please consult the router manufacture, your system administrator, or your Internet provider.

- To achieve optimum results with normal everyday document printing, place the Brother machine as close to the wireless LAN access point/router as possible with minimal obstructions. Large objects and walls between the two devices and interference from other electronic devices can affect the data transfer speed of your documents.

  Due to these factors, wireless may not be the best method of connection for all types of documents and applications. If you are printing large files, such as multi-page documents with mixed text and large graphics, you may want to consider selecting wired Ethernet for faster data transfer (supported models only), or USB for the fastest throughput speed.

- Although the Brother machine can be used in both a wired and wireless network (supported models only), only one connection method can be used at a time. However, a wireless network connection and Wi-Fi Direct connection, or a wired network connection (supported models only) and Wi-Fi Direct connection can be used at the same time.

Related Information

- Additional Methods of Configuring Your Brother Machine for a Wireless Network

Configure Your Machine for a Wireless Network

Related Models: MFC-L5755DW/MFC-L5900DW/MFC-L6700DW/MFC-L6900DW

1. Turn on your computer and put the Brother Installation CD-ROM into your CD-ROM drive.
   - For Windows, follow these instructions.
   - For Mac, click **Driver Download** to go to the Brother Solutions Center. Follow the on-screen instructions to install printer drivers.
2. The opening screen appears automatically.

   Choose your language, and then follow the on-screen instructions.

   - (Windows XP)

     If the Brother screen does not appear automatically, go to **My Computer**. Double-click the CD-ROM icon, and then double-click **start.exe**.
   - (Windows Vista and Windows7)

     If the Brother screen does not appear automatically, go to **Computer**. Double-click the CD-ROM icon, and then double-click **start.exe**.
   - (Windows 8)

     Click the (**File Explorer**) icon on the taskbar, and then go to **Computer** (**This PC**). Double-click the CD-ROM icon, and then double-click **start.exe**.
   - If the **User Account Control** screen appears, do one of the following:
     - (Windows Vista) Click **Allow**.
     - (Windows 7/Windows 8) Click **Yes**.
3. Choose **Wireless Network Connection (Wi-Fi)**, and then click **Next**.
4. Follow the on-screen instructions.

After you have completed the wireless setup, the installer program walks you through installing the drivers and software necessary for operating your device. Click **Next** in the installation dialog box and follow the on-screen instructions.

Related Information

- Additional Methods of Configuring Your Brother Machine for a Wireless Network

Configure Your Machine for a Wireless Network Using the One Push Method of Wi-Fi Protected Setup™ (WPS)

Related Models: MFC-L5755DW/MFC-L5900DW/MFC-L6700DW/MFC-L6900DW

If your wireless access point/router supports WPS (Push Button Configuration), you can use WPS from your machine's control panel menu to configure your wireless network settings.

Routers or access points that support WPS are marked with this symbol:

1. Press [Settings] > [All Settings] > [Network] > [WLAN] > [WPS].
2. When [Enable WLAN?] appears, press [Yes].

   This will start the wireless setup wizard. To cancel, press [No].
3. When the touchscreen displays [Start WPS on your wireless access point/router, then press [OK].], press the WPS button on your wireless access point/router. Then press [OK] on your machine. Your machine will automatically detect your wireless access point/router and try to connect to your wireless network.

If your wireless device is connected successfully, the machine's LCD displays [Connected].

You have completed the wireless network setup. To install drivers and software necessary for operating your device, insert the Brother Installation CD-ROM to your computer or go to your model's **Downloads** page on the Brother Solutions Center at support.brother.com.

Related Information

- Additional Methods of Configuring Your Brother Machine for a Wireless Network
- Wireless LAN Report Error Codes

Configure Your Machine for a Wireless Network Using the PIN Method of Wi-Fi Protected Setup™ (WPS)

Related Models: MFC-L5755DW/MFC-L5900DW/MFC-L6700DW/MFC-L6900DW

If your wireless LAN access point/router supports WPS, you can use the Personal Identification Number (PIN) Method to configure your wireless network settings.

The PIN Method is one of the connection methods developed by the Wi-Fi Alliance®. By submitting a PIN created by an Enrollee (your machine) to the Registrar (a device that manages the wireless LAN), you can set up the wireless network and security settings. For more information on how to access WPS mode, see the instructions provided with your wireless access point/router.

Type A

Connection when the wireless LAN access point/router (1) doubles as Registrar.

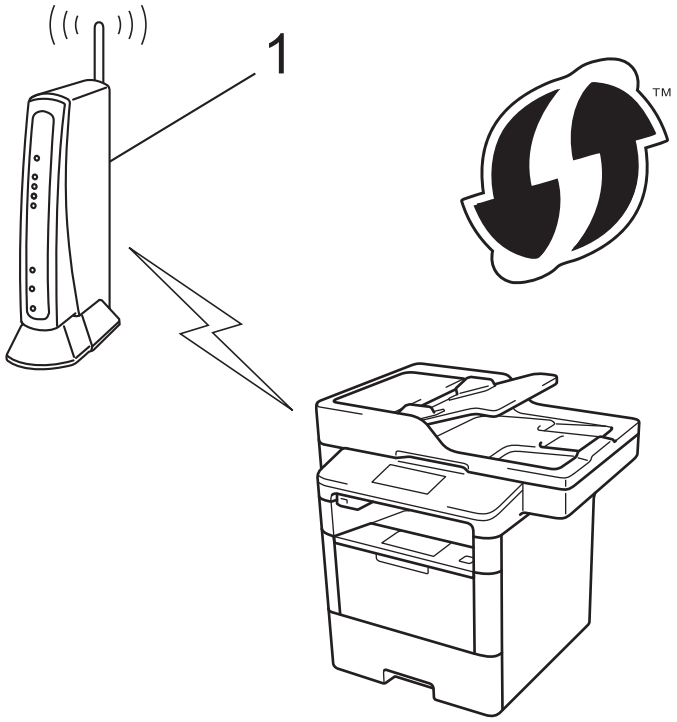

Type B

Connection when another device (2), such as a computer, is used as Registrar.

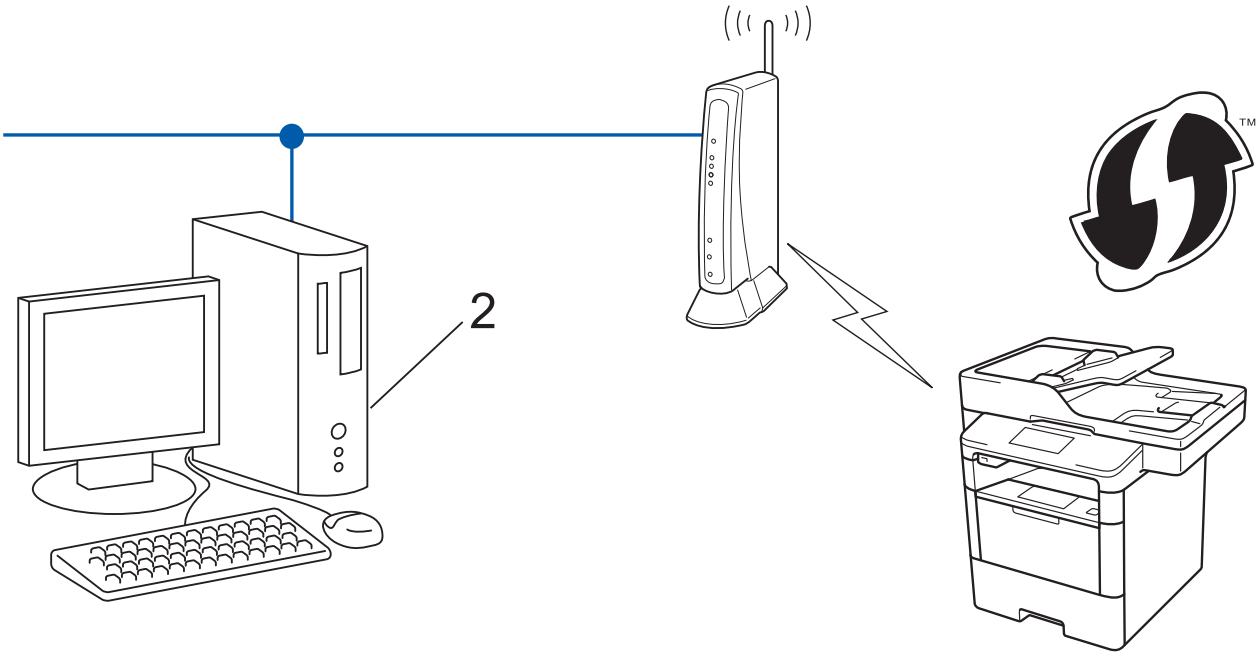

Routers or access points that support WPS are marked with this symbol:

1. Press [ ] [Settings] > [All Settings] > [Network] > [WLAN] > [WPS w/ PIN Code].
2. When [Enable WLAN?] appears, press [Yes].

   This will start the wireless setup wizard. To cancel, press [No].
3. The LCD displays an eight-digit PIN and the machine starts searching for a wireless LAN access point/router.
4. Using a computer that is on the network, type "http://access point's IP address" in your browser (where "access point's IP address" is the IP address of the device that is being used as the Registrar).
5. Go to the WPS settings page and type the PIN, and then follow the on-screen instructions.

- The Registrar is usually the wireless LAN access point/router.
- The settings page will differ depending on the brand of wireless LAN access point/router. For more information, see the instructions supplied with your wireless LAN access point/router.

If you are using a Windows Vista, Windows 7, or Windows 8 computer as a Registrar, complete the following steps:

6. Do one of the following:
   - (Windows Vista)

     Click **(Start)** > **Network** > **Add a wireless device**.
   - (Windows 7)

     Click **(Start)** > **Devices and Printers** > **Add a device**.
   - (Windows 8)

     Move your mouse to the lower right corner of your desktop. When the menu bar appears, click **Settings** > **Control Panel** > **Hardware and Sound** > **Devices and Printers** > **Add a device**.

- To use a Windows Vista, Windows 7, or Windows 8 computer as a Registrar, you must register it to your network in advance. For more information, see the instructions supplied with your wireless LAN access point/router.
- If you use Windows 7 or Windows 8 as a Registrar, you can install the printer driver after the wireless configuration by following the on-screen instructions. To install the full driver and software package, use the Brother installer on the Installer CD-ROM.

7. Select your machine and click **Next**.
8. Type the PIN displayed on the machine's LCD, and then click **Next**.
9. Select your network, and then click **Next**.
10. Click **Close**.

If your wireless device is connected successfully, the machine's LCD displays `[Connected]`.

You have completed the wireless network setup. To install drivers and software necessary for operating your device, insert the Brother Installation CD-ROM to your computer or go to your model's **Downloads** page on the Brother Solutions Center at support.brother.com.

Related Information

- Additional Methods of Configuring Your Brother Machine for a Wireless Network
- Wireless LAN Report Error Codes

Configure Your Machine for a Wireless Network in Ad-Hoc Mode (For IEEE 802.11b/g/n)

- Configure Your Machine for a Wireless Network in Ad-Hoc Mode Using a New SSID
- Configure Your Machine for a Wireless Network in Ad-Hoc Mode Using an Existing SSID

Configure Your Machine for a Wireless Network in Ad-Hoc Mode Using a New SSID

Related Models: MFC-L5755DW/MFC-L5900DW/MFC-L6700DW/MFC-L6900DW

You must connect to a new SSID from your computer when it is configured for Ad-Hoc mode.

1. Press [ ] [Settings] > [All Settings] > [Network] > [WLAN] > [Setup Wizard].
2. When [Enable WLAN?] appears, press [Yes].

   This will start the wireless setup wizard. To cancel, press [No].
3. The machine will search for your network and display a list of available SSIDs. Swipe up or down or press ▲ or ▼ to display [<New SSID>]. Press [<New SSID>], and then press [OK].
4. Enter the SSID name, and then press [OK].
5. Press [Ad-hoc] when instructed.
6. Select the Encryption type [None] or [WEP].
7. If you selected the [WEP] option for Encryption type, select and enter the WEP key, and then press [OK].

   - Your Brother machine supports the use of the first WEP key only.
8. The machine will attempt to connect to the wireless device you have selected.

If your wireless device is connected successfully, the machine's LCD displays [Connected].

You have completed the wireless network setup. To install drivers and software necessary for operating your device, insert the Brother Installation CD-ROM to your computer or go to your model's **Downloads** page on the Brother Solutions Center at support.brother.com.

Related Information

- Configure Your Machine for a Wireless Network in Ad-Hoc Mode (For IEEE 802.11b/g/n)
- How to Enter Text on Your Brother Machine
- Wireless LAN Report Error Codes

Configure Your Machine for a Wireless Network in Ad-Hoc Mode Using an Existing SSID

Related Models: MFC-L5755DW/MFC-L5900DW/MFC-L6700DW/MFC-L6900DW

If you are trying to pair your Brother machine to a computer that is already in Ad-Hoc mode and has a configured SSID, use these instructions.

Before configuring your machine, we recommend writing down your wireless network settings. You will need this information before you continue with the configuration.

1. Check and record the current wireless network settings of the computer to which you are connecting.

   The wireless network settings of the computer you are connecting with must be set to Ad-Hoc mode with an SSID already configured. For more information on how to configure your computer in Ad-Hoc mode, see the instructions included with your computer or contact your network administrator.

Network Name (SSID)

Communication Mode	Encryption Mode	Network Key
Ad-Hoc	NONE	-
	WEP	

For example:

Network Name (SSID)
HELLO

Communication Mode	Encryption Mode	Network Key
Ad-Hoc	WEP	12345

   Your Brother machine supports the use of the first WEP key only.

2. Press [ ] [Settings] > [All Settings] > [Network] > [WLAN] > [Setup Wizard].
3. When [Enable WLAN?] appears, press [Yes].

   This will start the wireless setup wizard. To cancel, press [No].
4. The machine will search for your network and display a list of available SSIDs. If a list of SSIDs is displayed, swipe up or down or press ▲ or ▼ to display the SSID to which you want to connect, and then press the SSID.
5. Press [OK].
6. Enter the WEP key, and then press [OK].

   - Your Brother machine supports the use of the first WEP key only.

7. The machine attempts to connect to the wireless device you have selected.

If your wireless device is connected successfully, the machine's LCD displays [Connected].

You have completed the wireless network setup. To install drivers and software necessary for operating your device, insert the Brother Installation CD-ROM to your computer or go to your model's **Downloads** page on the Brother Solutions Center at support.brother.com.

Related Information

- Configure Your Machine for a Wireless Network in Ad-Hoc Mode (For IEEE 802.11b/g/n)
- How to Enter Text on Your Brother Machine
- Wireless LAN Report Error Codes

Configure Your Machine for a Wireless Network Using the Machine's Control Panel Setup Wizard

Related Models: MFC-L5755DW/MFC-L5900DW/MFC-L6700DW/MFC-L6900DW

Before configuring your machine, we recommend writing down your wireless network settings. You will need this information before you continue with the configuration.

1. Check and record the current wireless network settings of the computer to which you are connecting.

Network Name (SSID)

Network Key

For example:

Network Name (SSID)
HELLO

Network Key
12345

- Your access point/router may support the use of multiple WEP keys, however your Brother machine supports the use of the first WEP key only.
- If you need assistance during setup and want to contact Brother customer service, make sure you have your SSID (Network Name) and Network Key ready. We cannot assist you in locating this information.
- If you do not know this information (SSID and Network Key), you cannot continue the wireless setup.

  How can I find this information?

  a. Check the documentation provided with your wireless access point/router.
  b. The initial SSID could be the manufacturer's name or the model name.
  c. If you do not know the security information, please consult the router manufacturer, your system administrator, or your Interner provider.

2. On your Brother machine's LCD, press [ ] [Settings] > [All Settings] > [Network] > [WLAN] > [Setup Wizard].
3. When [Enable WLAN?] appears, press [Yes].

   This will start the wireless setup wizard. To cancel, press [No].
4. The machine will search for your network and display a list of available SSIDs.

   If a list of SSIDs is displayed, swipe up or down or press ▲ or ▼ to display the SSID to which you want to connect, and then press the SSID.
5. Press [OK].
6. Do one of the following:
   - If you are using an authentication and encryption method that requires a Network Key, enter the Network Key you wrote down in the first step.

     When you have entered all the characters, press [OK].
   - If your authentication method is Open System and your encryption mode is None, go to the next step.

7. The machine attempts to connect to the wireless device you have selected.

If your wireless device is connected successfully, the machine's LCD displays `[Connected]`.

You have completed the wireless network setup. To install drivers and software necessary for operating your device, insert the Brother Installation CD-ROM to your computer or go to your model's **Downloads** page on the Brother Solutions Center at support.brother.com.

Related Information

- Additional Methods of Configuring Your Brother Machine for a Wireless Network
- How to Enter Text on Your Brother Machine
- Wireless LAN Report Error Codes

Configure Your Machine for a Wireless Network When the SSID Is Not Broadcast

Related Models: MFC-L5755DW/MFC-L5900DW/MFC-L6700DW/MFC-L6900DW

Before configuring your machine, we recommend writing down your wireless network settings. You will need this information before you continue with the configuration.

1. Check and record the current wireless network settings.

Network Name (SSID)

Communication Mode	Authentication Method	Encryption Mode	Network Key
Infrastructure	Open System	NONE	-
		WEP	
	Shared Key	WEP	
	WPA/WPA2-PSK	AES	
		TKIP (TKIP is supported for WPA-PSK only.)	

For example:

Network Name (SSID)
HELLO

Communication Mode	Authentication Method	Encryption Mode	Network Key
Infrastructure	WPA2-PSK	AES	12345678

If your router uses WEP encryption, enter the key used as the first WEP key. Your Brother machine supports the use of the first WEP key only.

2. Press [ ] [Settings] > [All Settings] > [Network] > [WLAN] > [Setup Wizard].
3. When [Enable WLAN?] appears, press [Yes].

   This will start the wireless setup wizard. To cancel, press [No].
4. The machine will search for your network and display a list of available SSIDs. Swipe up or down or press ▲ or ▼ to display [<New SSID>]. Press [<New SSID>], and then press [OK].
5. Enter the SSID name, and then press [OK].
6. Press [Infrastructure] when instructed.
7. Select the Authentication Method.
8. Do one of the following:
   - If you selected the [Open System] option, press the Encryption type [None] or [WEP].

     If you selected the [WEP] option for Encryption type, select and enter the WEP key, and then press [OK].
   - If you selected the [Shared Key] option, select and enter the WEP key, and then press [OK].
   - If you selected the [WPA/WPA2-PSK] option, press the Encryption type [TKIP+AES] or [AES].

     Enter the WPA key, and then press [OK].

- Your Brother machine supports the use of the first WEP key only.

9. The machine will attempt to connect to the wireless device you have selected.

If your wireless device is connected successfully, the machine's LCD displays `[Connected]`.

You have completed the wireless network setup. To install drivers and software necessary for operating your device, insert the Brother Installation CD-ROM to your computer or go to your model's **Downloads** page on the Brother Solutions Center at support.brother.com.

Related Information

- Additional Methods of Configuring Your Brother Machine for a Wireless Network
- I Cannot Complete the Wireless Network Setup Configuration
- How to Enter Text on Your Brother Machine
- Wireless LAN Report Error Codes

Configure Your Machine for an Enterprise Wireless Network

Related Models: MFC-L5755DW/MFC-L5900DW/MFC-L6700DW/MFC-L6900DW

Before configuring your machine, we recommend writing down your wireless network settings. You will need this information before you continue with the configuration.

1. Check and record the current wireless network settings.

Network Name (SSID)

Communication Mode	Authentication Method	Encryption Mode	User ID	Password
Infrastructure	LEAP	CKIP		
	EAP-FAST/NONE	AES		
		TKIP		
	EAP-FAST/MS-CHAPv2	AES		
		TKIP		
	EAP-FAST/GTC	AES		
		TKIP		
	PEAP/MS-CHAPv2	AES		
		TKIP		
	PEAP/GTC	AES		
		TKIP		
	EAP-TTLS/CHAP	AES		
		TKIP		
	EAP-TTLS/MS-CHAP	AES		
		TKIP		
	EAP-TTLS/MS-CHAPv2	AES		
		TKIP		
	EAP-TTLS/PAP	AES		
		TKIP		
	EAP-TLS	AES		-
		TKIP		-

For example:

Network Name (SSID)
HELLO

Communication Mode	Authentication Method	Encryption Mode	User ID	Password
Infrastructure	EAP-FAST/MS-CHAPv2	AES	Brother	12345678

- If you configure your machine using EAP-TLS authentication, you must install the client certificate issued by a CA before you start configuration. Contact your network administrator about the client certificate. If you have installed more than one certificate, we recommend writing down the certificate name you want to use.
- If you verify your machine using the common name of the server certificate, we recommend writing down the common name before you start configuration. Contact your network administrator about the common name of the server certificate.

2. Press [ ] [Settings] > [All Settings] > [Network] > [WLAN] > [Setup Wizard].
3. When [Enable WLAN?] appears, press [Yes].

   This will start the wireless setup wizard. To cancel, press [No].
4. The machine will search for your network and display a list of available SSIDs. Swipe up or down or press ▲ or ▼ to display [<New SSID>]. Press [<New SSID>], and then press [OK].
5. Enter the SSID name, and then press [OK].
6. Press [Infrastructure] when instructed.
7. Select the Authentication Method.
8. Do one of the following:
   - If you selected the [LEAP] option, enter the user ID, and then press [OK]. Enter the Password, and then press [OK].
   - If you selected the [EAP-FAST], [PEAP] or [EAP-TTLS] option, select the Inner Authentication method [NONE], [CHAP], [MS-CHAP], [MS-CHAPv2], [GTC] or [PAP].

     Depending on your Authentication method, the Inner Authentication method selections differ.

     Select the encryption type [TKIP+AES] or [AES].

     Select the verification method [No Verification], [CA] or [CA + Server ID].
     - If you selected the [CA + Server ID] option, enter the server ID, user ID and password (if required), and then press [OK] for each option.
     - For other selections, enter the user ID and Password, and then press [OK] for each option.

     If you have not imported a CA certificate into your machine, the machine displays [No Verification].
   - If you selected the [EAP-TLS] option, select the encryption type [TKIP+AES] or [AES].

     The machine will display a list of available Client Certificates, and then select the certificate.

     Select the verification method [No Verification], [CA] or [CA + Server ID].
     - If you selected the [CA + Server ID] option, enter the server ID and user ID, and then press [OK] for each option.
     - For other selections, enter the user ID, and then press [OK].

     If you have not imported a CA certificate into your machine, the machine displays [No Verification].
9. The machine attempts to connect to the wireless device you have selected.

If your wireless device is connected successfully, the machine's LCD displays [Connected].

You have completed the wireless network setup. To install drivers and software necessary for operating your device, insert the Brother Installation CD-ROM to your computer or go to your model's **Downloads** page on the Brother Solutions Center at support.brother.com.

Related Information

- Additional Methods of Configuring Your Brother Machine for a Wireless Network
- Wireless LAN Report Error Codes

Use Wi-Fi Direct®

- Print or Scan from Your Mobile Device Using Wi-Fi Direct
- Configure Your Wi-Fi Direct Network
- I Cannot Complete the Wireless Network Setup Configuration

Print or Scan from Your Mobile Device Using Wi-Fi Direct

Related Models: MFC-L5755DW/MFC-L5900DW/MFC-L6700DW/MFC-L6900DW

Wi-Fi Direct is one of the wireless configuration methods developed by the Wi-Fi Alliance®. It allows you to configure a secured wireless network between your Brother machine and a mobile device, such as an Android™ device, Windows Phone device, iPhone, iPod touch, or iPad, without using an access point. Wi-Fi Direct supports wireless network configuration using the one-push or PIN Method of Wi-Fi Protected Setup™ (WPS). You can also configure a wireless network by manually setting an SSID and password. Your Brother machine's Wi-Fi Direct feature supports WPA2™ security with AES encryption.

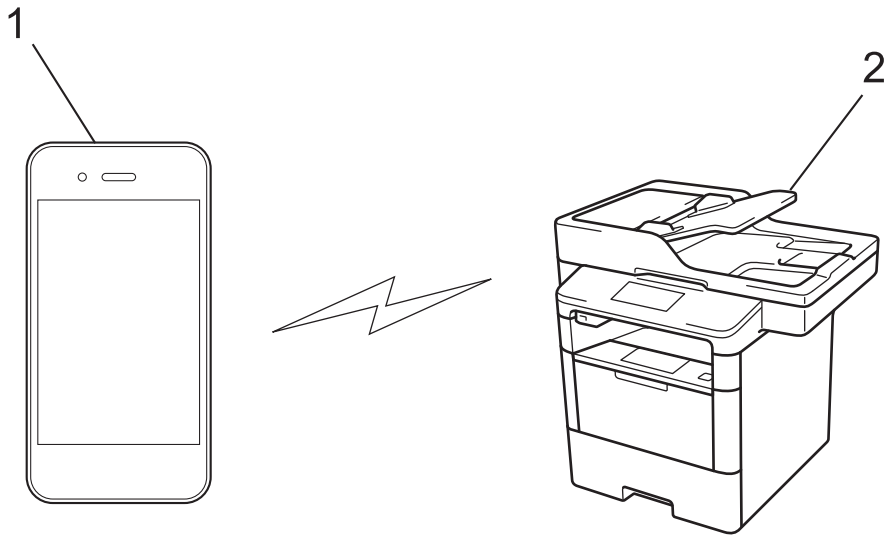

1. Mobile device
2. Your Brother machine

- Although the Brother machine can be used in both a wired and wireless network, only one connection method can be used at a time. However, a wireless network connection and Wi-Fi Direct connection, or a wired network connection (supported models only) and Wi-Fi Direct connection can be used at the same time.
- The Wi-Fi Direct-supported device can become a Group Owner (G/O). When configuring the Wi-Fi Direct network, the G/O serves as an access point.
- Ad-hoc mode and Wi-Fi Direct cannot be used at the same time. Disable one function to enable the other. If you want to use Wi-Fi Direct while you are using Ad-hoc mode, set Network I/F to Wired LAN or disable Ad-hoc mode and connect your Brother machine to the access point.

Related Information

- Use Wi-Fi Direct®

Configure Your Wi-Fi Direct Network

Configure your Wi-Fi Direct network settings from your machine's control panel.

- Wi-Fi Direct Network Configuration Overview
- Configure Your Wi-Fi Direct Network Using the One-Push Method
- Configure Your Wi-Fi Direct Network Using the One-Push Method of Wi-Fi Protected Setup™ (WPS)
- Configure Your Wi-Fi Direct Network Using the PIN Method
- Configure Your Wi-Fi Direct Network Using the PIN Method of Wi-Fi Protected Setup™ (WPS)
- Configure Your Wi-Fi Direct Network Manually

Wi-Fi Direct Network Configuration Overview

Related Models: MFC-L5755DW/MFC-L5900DW/MFC-L6700DW/MFC-L6900DW

The following instructions offer five methods for configuring your Brother machine in a wireless network environment. Select the method you prefer for your environment.

Check your mobile device for configuration.

1. Does your mobile device support Wi-Fi Direct?

Option	Description
Yes	Go to Step 2
No	Go to Step 3

2. Does your mobile device support one-push configuration for Wi-Fi Direct?

Option	Description
Yes	See *Related Information*: Configure Your Wi-Fi Direct Network Using the One-Push Method.
No	See *Related Information*: Configure Your Wi-Fi Direct Network Using the PIN Method.

3. Does your mobile device support Wi-Fi Protected Setup™ (WPS)?

Option	Description
Yes	Go to Step 4
No	See *Related Information*: Configure Your Wi-Fi Direct Network Manually.

4. Does your mobile device support one-push configuration for Wi-Fi Protected Setup™ (WPS)?

Option	Description
Yes	See *Related Information*: Configure Your Wi-Fi Direct Network Using the One-Push Method of Wi-Fi Protected Setup™ (WPS).
No	See *Related Information*: Configure Your Wi-Fi Direct Network Using the PIN Method of Wi-Fi Protected Setup™ (WPS).

To use Brother iPrint&Scan functionality in a Wi-Fi Direct network configured by one-push configuration using Wi-Fi Direct or by PIN Method configuration using Wi-Fi Direct, the device you use to configure Wi-Fi Direct must be running Android™ 4.0 or greater.

Related Information

- Configure Your Wi-Fi Direct Network
- Configure Your Wi-Fi Direct Network Using the One-Push Method
- Configure Your Wi-Fi Direct Network Using the One-Push Method of Wi-Fi Protected Setup™ (WPS)
- Configure Your Wi-Fi Direct Network Using the PIN Method
- Configure Your Wi-Fi Direct Network Using the PIN Method of Wi-Fi Protected Setup™ (WPS)

- Configure Your Wi-Fi Direct Network Manually

Configure Your Wi-Fi Direct Network Using the One-Push Method

Related Models: MFC-L5755DW/MFC-L5900DW/MFC-L6700DW/MFC-L6900DW

If your mobile device supports Wi-Fi Direct, follow these steps to configure a Wi-Fi Direct network.

When the machine receives the Wi-Fi Direct request from your mobile device, the message `[Wi-Fi Direct connection request received. Press [OK] to connect.]` will appear on the LCD. Press `[OK]` to connect.

1. Press [ ] `[Settings]` > `[All Settings]` > `[Network]` > `[Wi-Fi Direct]` > `[Push Button]`.
2. Activate Wi-Fi Direct on your mobile device (see your mobile device's user's guide for instructions) when `[Activate Wi-Fi Direct on other device. Then Press [OK].]` appears on the machine's LCD. Press `[OK]` on your machine.

   This will start the Wi-Fi Direct setup. To cancel, press .
3. Do one of the following:
   - When your Brother machine is the Group Owner (G/O), connect your mobile device to the machine directly.
   - When your Brother machine is not the G/O, it displays available device names with which to configure a Wi-Fi Direct network. Select the mobile device you want to connect to. Search for available devices again by pressing `[Rescan]`.
4. If your mobile device connects successfully, the machine's LCD displays `[Connected]`. You have completed the Wi-Fi Direct network setup. For more information on printing from or scanning to your mobile device, go to your model's **Manuals** page on the Brother Solutions Center at support.brother.com to see the Mobile Print/Scan Guide for Brother iPrint&Scan.

Related Information

- Configure Your Wi-Fi Direct Network
- Wi-Fi Direct Network Configuration Overview

Configure Your Wi-Fi Direct Network Using the One-Push Method of Wi-Fi Protected Setup™ (WPS)

Related Models: MFC-L5755DW/MFC-L5900DW/MFC-L6700DW/MFC-L6900DW

If your mobile device supports WPS (PBC; Push Button Configuration), follow these steps to configure a Wi-Fi Direct network.

When the machine receives the Wi-Fi Direct request from your mobile device, the message `[Wi-Fi Direct connection request received. Press [OK] to connect.]` will appear on the LCD. Press `[OK]` to connect.

1. Press [ ] `[Settings]` > `[All Settings]` > `[Network]` > `[Wi-Fi Direct]` > `[Group Owner]`.
2. Press `[On]`.
3. Swipe up or down or press ▲ or ▼ to select the `[Push Button]` option. Press `[Push Button]`.
4. Activate your mobile device's WPS one-push configuration method (see your mobile device's user's guide for instructions) when `[Activate Wi-Fi Direct on other device. Then Press [OK].]` appears on the machine's LCD. Press `[OK]` on your Brother machine.

   This will start the Wi-Fi Direct setup. To cancel, press .
5. If your mobile device connects successfully, the machine's LCD displays `[Connected]`. You have completed the Wi-Fi Direct network setup. For more information on printing from or scanning to your mobile device, go to your model's **Manuals** page on the Brother Solutions Center at support.brother.com to see the Mobile Print/Scan Guide for Brother iPrint&Scan.

Related Information

- Configure Your Wi-Fi Direct Network
- Wi-Fi Direct Network Configuration Overview

Configure Your Wi-Fi Direct Network Using the PIN Method

Related Models: MFC-L5755DW/MFC-L5900DW/MFC-L6700DW/MFC-L6900DW

If your mobile device supports the PIN Method of Wi-Fi Direct, follow these steps to configure a Wi-Fi Direct network:

When the machine receives the Wi-Fi Direct request from your mobile device, the message `[Wi-Fi Direct connection request received. Press [OK] to connect.]` will appear on the LCD. Press `[OK]` to connect.

1. Press [ ] `[Settings]` > `[All Settings]` > `[Network]` > `[Wi-Fi Direct]` > `[PIN Code]`.
2. Activate Wi-Fi Direct on your mobile device (see your mobile device's user's guide for instructions) when `[Activate Wi-Fi Direct on other device. Then Press [OK].]` appears on the machine's LCD. Press `[OK]` on your machine.

   This will start the Wi-Fi Direct setup. To cancel, press .
3. Do one of the following:
   - When your Brother machine is the Group Owner (G/O), it will wait for a connection request from your mobile device. When `[PIN Code]` appears, enter the PIN displayed on your mobile device in the machine. Press `[OK]` to complete the setup.

     If the PIN is displayed on your Brother machine, enter the PIN in your mobile device.
   - When your Brother machine is not the G/O, it displays available device names with which to configure a Wi-Fi Direct network. Select the mobile device you want to connect to. Search for available devices again by pressing `[Rescan]`.
4. Do one of the following:
   - Press `[Display PIN Code]` to display the PIN on your machine and enter the PIN in your mobile device. Go to the next step.
   - Press `[Input PIN Code]` to enter the PIN displayed on your mobile device in the machine, and then press `[OK]`. Go to the next step.

     If your mobile device does not display a PIN, press on your Brother machine. Go back to the first step and try again.
5. If your mobile device connects successfully, the machine's LCD displays `[Connected]`. You have completed the Wi-Fi Direct network setup. For more information on printing from or scanning to your mobile device, go to your model's **Manuals** page on the Brother Solutions Center at support.brother.com to see the Mobile Print/Scan Guide for Brother iPrint&Scan.

Related Information

- Configure Your Wi-Fi Direct Network
- Wi-Fi Direct Network Configuration Overview

Configure Your Wi-Fi Direct Network Using the PIN Method of Wi-Fi Protected Setup™ (WPS)

Related Models: MFC-L5755DW/MFC-L5900DW/MFC-L6700DW/MFC-L6900DW

If your mobile device supports the PIN Method of Wi-Fi Protected Setup™ (WPS), follow these steps to configure a Wi-Fi Direct network.

When the machine receives the Wi-Fi Direct request from your mobile device, the message `[Wi-Fi Direct connection request received. Press [OK] to connect.]` will appear on the LCD. Press `[OK]` to connect.

1. Press [ ] `[Settings]` > `[All Settings]` > `[Network]` > `[Wi-Fi Direct]` > `[Group Owner]`.
2. Press `[On]`.
3. Swipe up or down or press ▲ or ▼ to select the `[PIN Code]` option. Press `[PIN Code]`.
4. When `[Activate Wi-Fi Direct on other device. Then Press [OK].]` appears, activate your mobile device's WPS PIN configuration method (see your mobile device's user's guide for instructions) and then press `[OK]` on your Brother machine.

   This will start the Wi-Fi Direct setup. To cancel, press ✕.
5. The machine will wait for a connection request from your mobile device. When `[PIN Code]` appears, enter the PIN displayed on your mobile device in to the machine. Press `[OK]`.
6. If your mobile device connects successfully, the machine's LCD displays `[Connected]`. You have completed the Wi-Fi Direct network setup. For more information on printing from or scanning to your mobile device, go to your model's **Manuals** page on the Brother Solutions Center at support.brother.com to see the Mobile Print/Scan Guide for Brother iPrint&Scan.

Related Information

- Configure Your Wi-Fi Direct Network
- Wi-Fi Direct Network Configuration Overview

Configure Your Wi-Fi Direct Network Manually

Related Models: MFC-L5755DW/MFC-L5900DW/MFC-L6700DW/MFC-L6900DW

If your mobile device does not support Wi-Fi Direct or WPS, you must configure a Wi-Fi Direct network manually.

When the machine receives the Wi-Fi Direct request from your mobile device, the message `[Wi-Fi Direct connection request received. Press [OK] to connect.]` will appear on the LCD. Press `[OK]` to connect.

1. Press [ ] `[Settings]` > `[All Settings]` > `[Network]` > `[Wi-Fi Direct]` > `[Manual]`.
2. The machine will display the SSID name and Password for two minutes. Go to your mobile device's wireless network settings screen, select the SSID name, and then enter the password.
3. If your mobile device connects successfully, the machine's LCD displays `[Connected]`. You have completed the Wi-Fi Direct network setup. For more information on printing from or scanning to your mobile device, go to your model's **Manuals** page on the Brother Solutions Center at support.brother.com to see the Mobile Print/Scan Guide for Brother iPrint&Scan or the AirPrint Guide.

Related Information

- Configure Your Wi-Fi Direct Network
- Wi-Fi Direct Network Configuration Overview

Advanced Network Features

- Print the Network Configuration Report
- Configure Your Mail Server Settings Using Web Based Management
- Configure the Brother Machine for Email or Internet Fax (I-Fax)
- I-Fax Options
- Use the Send Fax to Server Feature
- Print the WLAN Report
- Configure and Operate LDAP Search
- Synchronize Time with the SNTP Server Using Web Based Management

Print the Network Configuration Report

The Network Configuration Report lists the network configuration, including the network print server settings.

- Node Name: The Node Name appears on the current Network Configuration Report. The default Node Name is "BRNxxxxxxxxxxxx" for a wired network or "BRWxxxxxxxxxxxx" for a wireless network (where "xxxxxxxxxxxx" is your machine's MAC Address / Ethernet Address.)
- If the [IP Address] on the Network Configuration Report shows 0.0.0.0, wait for one minute and try printing it again.
- You can find your machine's settings, such as the IP address, subnet mask, node name, and MAC Address on the report, for example:
  - IP address: 192.168.0.5
  - Subnet mask: 255.255.255.0
  - Node name: BRN000ca0000499
  - MAC Address: 00-0c-a0-00-04-99

1. Press [ ] [Settings] > [All Settings] > [Print Reports] > [Network Configuration].
2. Press [Yes].

Related Information

- Advanced Network Features
- Where Can I Find My Brother Machine's Network Settings?
- Use the Network Connection Repair Tool (Windows)
- I Want to Check that My Network Devices are Working Correctly
- Access Web Based Management
- Configure the Gigabit Ethernet Settings Using Web Based Management

Configure Your Mail Server Settings Using Web Based Management

Use Web Based Management to configure your Brother machine to connect with your mail server.

1. Start your web browser.
2. Type "http://machine's IP address" in your browser's address bar (where "machine's IP address" is the machine's IP address).

   For example:

   http://192.168.1.2
3. No password is required by default. Type a password if you have set one, and then click .
4. Click the **Network** tab.
5. Click **Protocol** in the left navigation bar.
6. In the **POP3/IMAP4/SMTP** field, click **Advanced Settings** and make sure the **Status** is **Enabled**.

POP3/IMAP4/SMTP

Cancel Submit

Status	Enabled

Send E-mail Settings(SMTP)

Server Address	0.0.0.0
Port	25
Server Authentication Method	◉ None ○ SMTP-AUTH
SMTP-AUTH Account Name	
SMTP-AUTH Account Password	
Enter password	
Retype password	
SSL/TLS	◉ None ○ SSL ○ TLS ☐ Verify Server Certificate
Device E-mail Address	brnxxxxxxxxxxxx@example.com

Receive E-mail Settings(POP3/IMAP4)

Protocol	◉ POP3 ○ IMAP4
Server Address	0.0.0.0
Port	110
Mailbox Name	
Mailbox Password	
Enter password	
Retype password	
	☐ Use APOP (POP3 Only)
Select Mail Folder Name(IMAP4 Only)	◉ Default(Inbox) ○ Specified :
SSL/TLS	◉ None ○ SSL ○ TLS ☐ Verify Server Certificate
Segmented Message Timeout	120 minute(s)

I-Fax>>

CA Certificate>>

E-mail report>>

Notification>>

Cancel Submit

7. Select the mail server you want to configure.
8. Enter the necessary settings for the mail server.

If you select the **IMAP4** option, you must enter the full path of the mail folder using single byte characters only, and then enter "Inbox" for the root mail folder.

9. When finished, click **Submit**.

   The **Test Send/Receive E-mail Configuration** dialog box appears.
10. Follow the instructions in the dialog box to test the current settings.

Related Information

- Advanced Network Features

Configure the Brother Machine for Email or Internet Fax (I-Fax)

Before using I-Fax, configure your Brother machine to communicate with your network and mail server. You can configure these items using the machine's control panel, Web Based Management, Remote setup, or BRAdmin Professional. Make sure the following items are configured on your machine:

- IP address (If you are already using your machine on your network, the machine's IP address has been configured correctly.)
- Email address
- SMTP, POP3, IMAP4 server address/port/Authentication method/Encryption method/Server Certificate Verification
- Mailbox name and password

If you are unsure of any of these items, contact your system administrator.

Related Information

- Advanced Network Features
- Fax Using the Internet (I-Fax)
- Initial Setup for Email or Internet Fax (I-Fax)
- Send an Internet Fax (I-Fax)
- How Your Brother Machine Receives an Internet Fax (I-Fax)
- Poll the Server Manually
- How Your Computer Receives an I-Fax
- Forward Received Email and Fax Messages
- Relay Broadcast
- I-Fax Options

Fax Using the Internet (I-Fax)

Related Models: MFC-L5700DN/MFC-L5755DW/MFC-L5900DW/MFC-L6700DW/MFC-L6900DW

With Internet Fax (I-Fax), you can send and receive fax documents using the Internet as the transport mechanism. Documents are transmitted in email messages as attached TIFF-F files. Your computer can send and receive documents as long as it has an application that can generate and view TIFF-F files. You can use any TIFF-F viewer application. Documents sent via the machine will be converted into a TIFF-F format automatically. If you want to send and receive messages to and from your machine, your computer's email application must support Multipurpose Internet Mail Extensions (MIME).

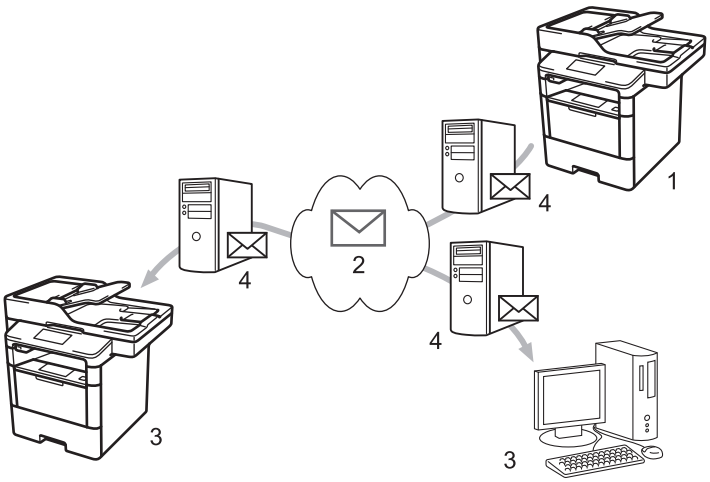

1. Sender
2. Internet
3. Receiver
4. Email server

- I-Fax supports sending and receiving documents in Letter or A4 format and in monochrome only.
- (MFC-L5700DN/MFC-L5755DW)

  To use this function, go to your model's **Downloads** page on the Brother Solutions Center at support.brother.com to update your machine's firmware or the program in your machine.

Related Information

- Configure the Brother Machine for Email or Internet Fax (I-Fax)
- Important Information about Internet Fax (I-Fax)
- Forward Received Email and Fax Messages

Important Information about Internet Fax (I-Fax)

Related Models: MFC-L5700DN/MFC-L5755DW/MFC-L5900DW/MFC-L6700DW/MFC-L6900DW

I-Fax communication on a LAN is very similar to communication via email; however, it is different from fax communication using standard phone lines. The following is important information for using I-Fax:

- Factors such as the receiver's location, structure of the LAN and how busy the circuit (such as the Internet) is may cause the system to take a longer time than usual to send an error mail.
- When sending confidential documents, we recommend using standard phone lines instead of the Internet (due to its low level of security).
- If the receiver's mail system is not MIME-compatible, you cannot use I-Fax to send documents. If possible, find out in advance, and note that some servers will not send an error reply.
- If a document is too large to send via I-Fax, it may not reach the receiver.
- You cannot change the font or size of the text in any Internet mail you receive.

Related Information

- Fax Using the Internet (I-Fax)

Initial Setup for Email or Internet Fax (I-Fax)

Before sending your I-Fax, use the control panel, Web Based Management, or Remote Setup to configure the following optional items:

- **E-mail Subject**
- **E-mail Message**
- **Size Limit**
- **Request Delivery Notification (Send)**

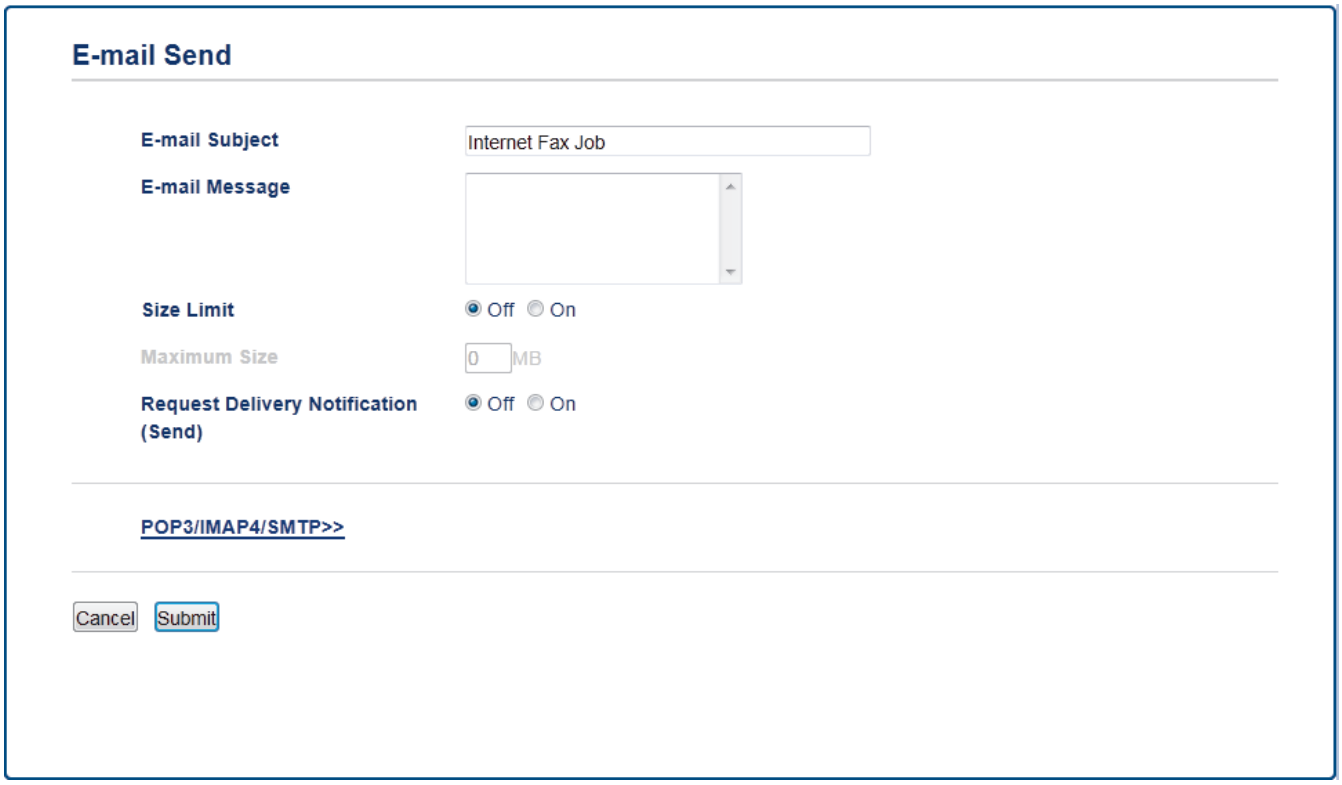

If you are unsure of any of these items, contact your system administrator.

Related Information

- Configure the Brother Machine for Email or Internet Fax (I-Fax)
- Forward Received Email and Fax Messages

Send an Internet Fax (I-Fax)

Related Models: MFC-L5700DN/MFC-L5755DW/MFC-L5900DW/MFC-L6700DW/MFC-L6900DW

Sending an I-Fax is like sending a normal fax. Make sure that your recipient's information is saved in your email address book, and load the document you want to I-Fax into your Brother machine.

- If the computer to which you want to send a document is not running Windows XP, Windows Server 2003/2008/2012/2012 R2, Windows Vista, Windows 7, or Windows 8, ask the computer's owner to install software that can view TIFF-F files.
- To send multiple pages, use the ADF.

1. Load your document.
2. Do one of the following:
   - If Fax Preview is set to [Off], press [Fax].
   - If Fax Preview is set to [On], press [Fax], and then press [Sending Faxes].
3. To change the fax-sending settings, press [Options].
4. Swipe up or down or press ▲ or ▼ to scroll through the fax settings. When the setting you want appears, press it and select your preference. When you have finished changing settings, press [OK].
5. Do one of the following:
   - Press , and then enter the email address using the touchscreen.
   - Press [Address Book], select the email address of your recipient, and then press [Apply].
6. Press [Fax Start].

   The machine starts scanning. After the document is scanned, it is transmitted to the recipient via your SMTP server. You can cancel the send operation by pressing during scanning.
7. Press .

Related Information

- Configure the Brother Machine for Email or Internet Fax (I-Fax)
- How to Enter Text on Your Brother Machine

How Your Brother Machine Receives an Internet Fax (I-Fax)

Related Models: MFC-L5700DN/MFC-L5755DW/MFC-L5900DW/MFC-L6700DW/MFC-L6900DW

When your Brother machine receives an incoming I-Fax, it will print the I-Fax automatically. To receive an I-Fax, we recommend using the control panel or Web Based Management to configure the following optional items:

- **Auto Polling**
- **Polling Frequency**
- **Print Mail Header**
- **Delete/Read Receive Error Mail**
- **Send Delivery Notification (Receive)**

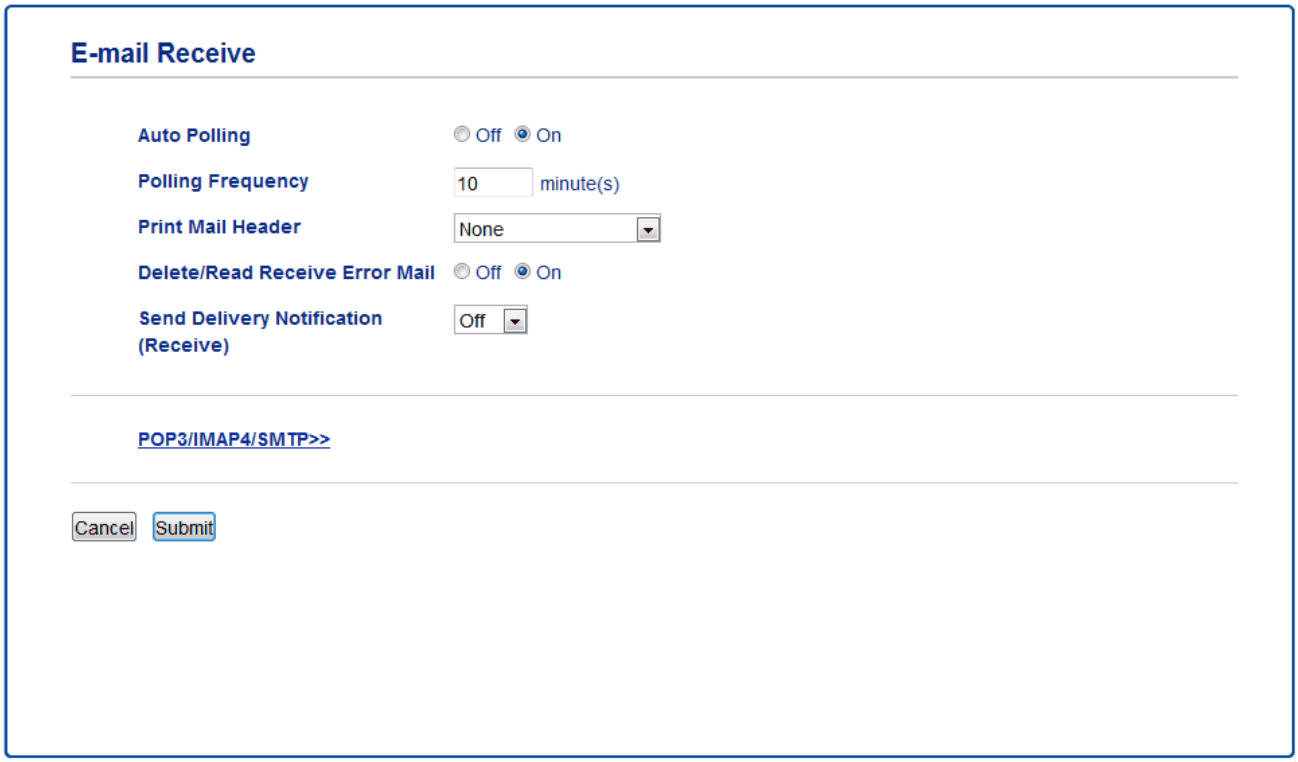

There are two ways you can receive email messages:

- POP3/IMAP4 receiving at regular intervals
- POP3/IMAP4 receiving, manually initiated

When using POP3/IMAP4 receiving, the machine polls your email server to receive data. Polling can occur at set intervals (for example, you can configure the machine to poll the email server every ten minutes) or you can manually poll the server.

- If your machine starts to receive email data, the LCD displays `[Receiving]`.The email will be printed automatically.
- If your machine is out of paper when receiving data, the received data will be held in the machine's memory. This data will be printed automatically after paper is reloaded in the paper tray.
- When the machine's Temporary Fax Backup Function is turned on, received data will be stored for a certain period of time.
- If the received mail is not in a plain text format, or an attached file is not in the TIFF-F format, the error message "**ATTACHED FILE FORMAT NOT SUPPORTED**" will be printed.
- If the received mail is too large, the error message "**E-MAIL FILE TOO LARGE**" will be printed.
- If **Delete/Read Receive Error Mail** is **On** (default), then the error mail will be deleted from the email server automatically.

Related Information

- Configure the Brother Machine for Email or Internet Fax (I-Fax)
- Store Incoming Faxes in the Machine's Memory
- How Your Computer Receives an I-Fax
- Forward Received Email and Fax Messages

Poll the Server Manually

Related Models: MFC-L5700DN/MFC-L5755DW/MFC-L5900DW/MFC-L6700DW/MFC-L6900DW

1. Press [Settings] > [All Settings] > [Network] > [E-mail/IFAX] > [Manual POP3 Receive].
2. Press [Yes] to confirm.
3. The LCD displays [Receiving] and your machine will print the data from the email server.

Related Information

- Configure the Brother Machine for Email or Internet Fax (I-Fax)

How Your Computer Receives an I-Fax

Related Models: MFC-L5700DN/MFC-L5755DW/MFC-L5900DW/MFC-L6700DW/MFC-L6900DW

When your computer receives an I-Fax, you will receive an email in your email application. The incoming I-Fax is attached to an email message that notifies you in its **Subject** line that your email server has received an I-Fax. You can either wait for your Brother machine to poll the email server, or you can manually poll the email server to receive the incoming data.

Related Information

- Configure the Brother Machine for Email or Internet Fax (I-Fax)
- How Your Brother Machine Receives an Internet Fax (I-Fax)

Forward Received Email and Fax Messages

Related Models: MFC-L5700DN/MFC-L5755DW/MFC-L5900DW/MFC-L6700DW/MFC-L6900DW

Use Brother's I-Fax feature to forward email or standard fax messages to another computer, to a fax machine, or to another I-Fax machine. Enable the Forwarding feature using your machine's control panel.

To enable forwarding using your machine's control panel :

1. Press [ ] [Settings] > [All Settings] > [Fax] > [Setup Receive] > [Memory Receive] > [Fax Forward].
2. Enter the recipient's fax number or email address using the touchscreen.
3. Select the file type you want.
4. Do one of the following:
   - Press [Manual] to enter the forwarding fax number (up to 20 characters) using the LCD.

     Press [OK].
   - Press [Address Book].

     Swipe up or down or press ▲ or ▼ to display to scroll until you find the fax number or email address where you want your faxes to be forwarded.

     Press the fax number or email address you want.

Press [Backup Print: On] to print received faxes at your machine so you will have a copy.

5. Press .

Related Information

- Configure the Brother Machine for Email or Internet Fax (I-Fax)
- How to Enter Text on Your Brother Machine
- Fax Using the Internet (I-Fax)
- Initial Setup for Email or Internet Fax (I-Fax)
- How Your Brother Machine Receives an Internet Fax (I-Fax)

Relay Broadcast

Related Models: MFC-L5700DN/MFC-L5755DW/MFC-L5900DW/MFC-L6700DW/MFC-L6900DW

A Relay Broadcast is when your Brother machine receives a message over the Internet and then relays it to another fax machine using conventional telephone lines. If you must fax a document over a long distance or abroad, use the Relay Broadcast Function to save the communication fee.

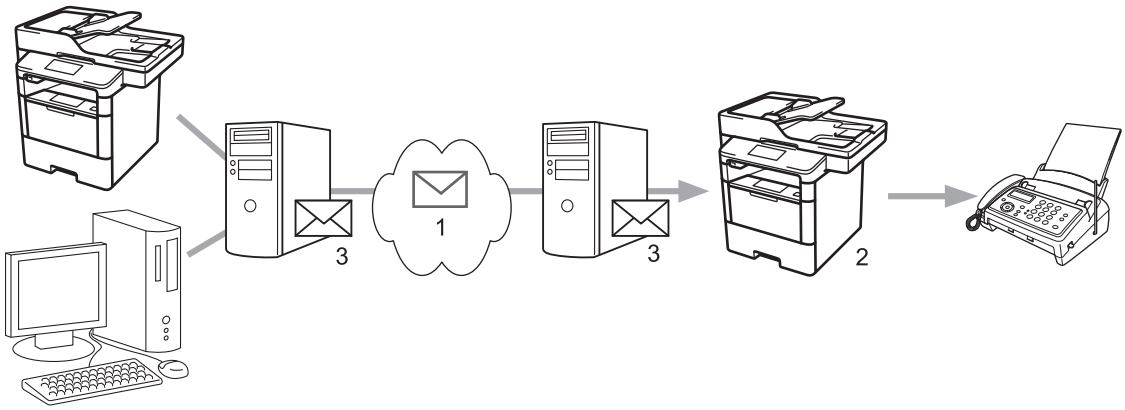

1. The Internet
2. Telephone line
3. Email server

Use the Brother machine's control panel or Web Based Management to configure the following items:

- **Relay Broadcast Function**

  Set the **Relay Broadcast Function** to **On**.
- **Relay Domain**

  Configure your machine's domain name on the machine that will broadcast the document to the conventional fax machine. If you wish to use your machine as a relay broadcast device, you must specify the trusted domain name (the portion of the name after the "@" sign) at the machine. Use care in selecting a trusted domain: any user on a trusted domain will be able to send a relay broadcast. You can register up to ten domain names.
- **Relay Broadcast Report**

  Specify whether or not you want a report to print after the machine completes the relay broadcast.

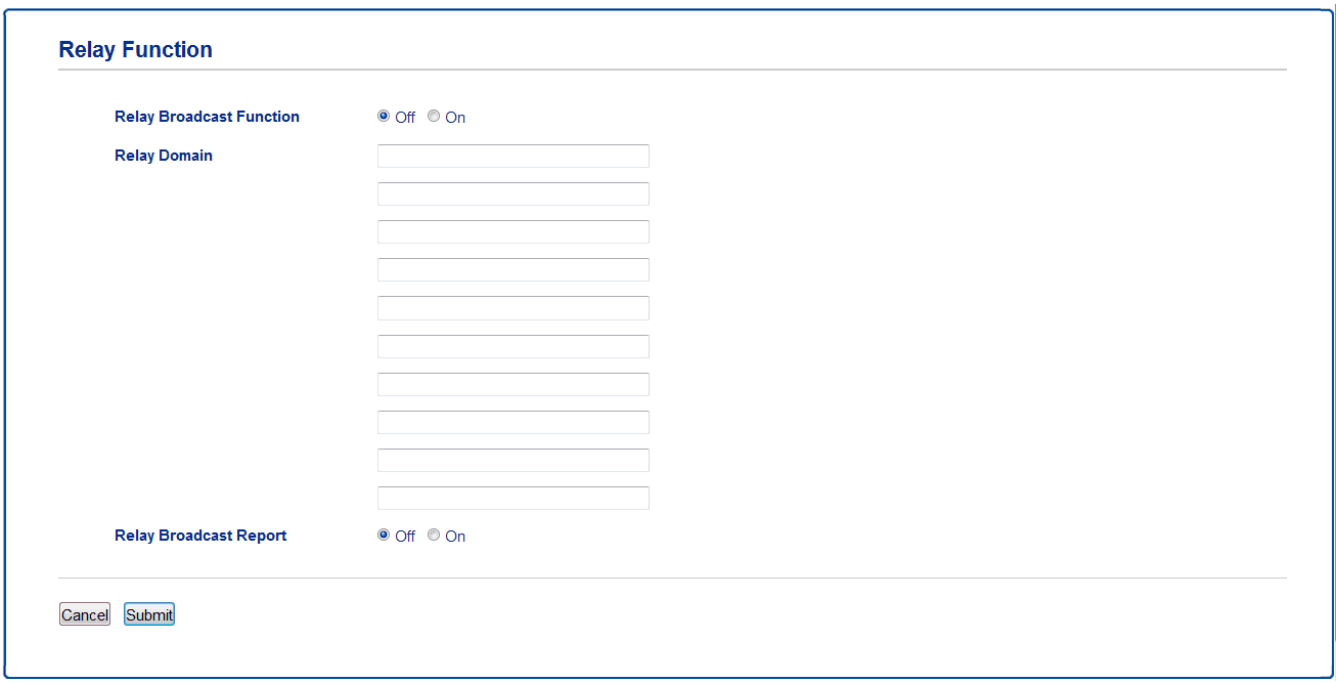

Related Information

- Configure the Brother Machine for Email or Internet Fax (I-Fax)
- Relay Broadcast from Your Brother Machine
- Relay Broadcast from Your Computer

Relay Broadcast from Your Brother Machine

Related Models: MFC-L5700DN/MFC-L5755DW/MFC-L5900DW/MFC-L6700DW/MFC-L6900DW

Use the Relay Broadcast Function to send email from your machine to a conventional fax machine.

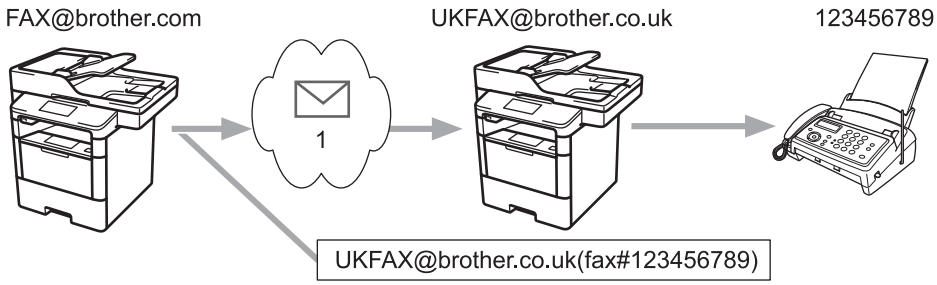

1. The Internet

In this example, your machine's email address is FAX@brother.com and you want to send a document from your machine to a standard fax machine in England with the email address UKFAX@brother.co.uk, and you want your machine to send the document using a conventional telephone line.

1. Load your document.
2. Do one of the following:
   - If Fax Preview is set to `[Off]`, press `[Fax]`.
   - If Fax Preview is set to `[On]`, press `[Fax]`, and then press `[Sending Faxes]`.
3. Press `[Options]`.
4. Swipe up or down or press ▲ or ▼ to display the `[Broadcasting]` option.
5. Press `[Broadcasting]`.
6. Press `[Add Number]`.
7. You can add email addresses to the broadcast in the following ways:
   - Press `[Add Number]` and press , enter the email address and press `[OK]`.
   - Press `[Add from Address book]`. Press the check box of the email address you want to add to the broadcast. After you have selected all the email addresses you want, press `[OK]`.
   - Press `[Search in Address book]`. Enter the name and press `[OK]`. The search results will be displayed. Press the name and then press the email address you want to add to the broadcast.

   The following is an example of how to enter the email address and phone number:

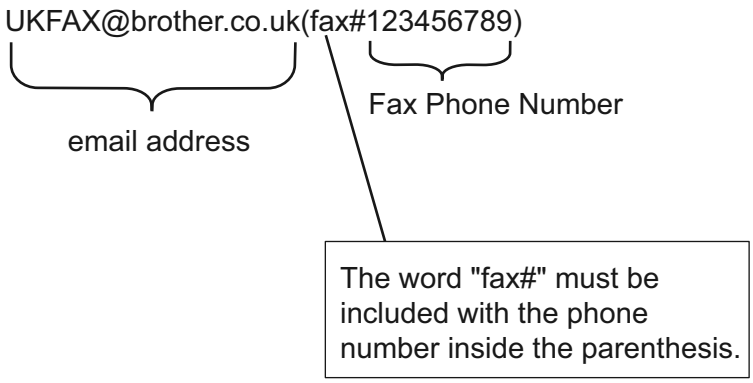

   After you have entered all of the fax numbers, press `[OK]`.

8. Press [Fax Start].

Related Information

- Relay Broadcast
- How to Enter Text on Your Brother Machine

Relay Broadcast from Your Computer

Related Models: MFC-L5700DN/MFC-L5755DW/MFC-L5900DW/MFC-L6700DW/MFC-L6900DW

Use the Relay Broadcast Function to send email from your computer to a conventional fax machine.

Some email applications do not support sending an email to multiple fax numbers. If your email application cannot support multiple fax numbers, you can relay to only one fax machine at a time.

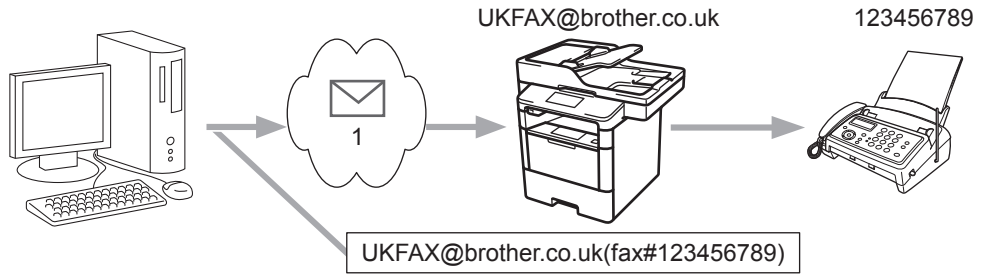

1. The Internet

If you are sending an email to a conventional fax machine, the method of entering the fax machine's fax number will vary, depending on the mail application you are using.

1. In your email application, create a new mail message and type the email address of the relay machine and fax number of the first fax machine in the "TO" box.

   The following is an example of how to enter the email address and fax number:

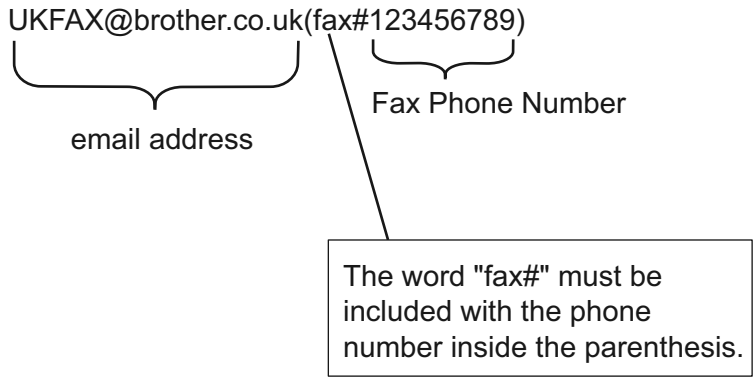

For Microsoft Outlook, the address information must be entered into the address book as follows:

Name: fax#123456789

Email address: UKFAX@brother.co.uk

2. Type the email address of the relay machine and fax number of the second fax machine in the "TO" box.
3. Send the email.

Related Information

- Relay Broadcast

I-Fax Options

- Internet Fax (I-Fax) Verification Mail
- Error Mail
- Configure the Brother Machine for Email or Internet Fax (I-Fax)

Internet Fax (I-Fax) Verification Mail

Related Models: MFC-L5700DN/MFC-L5755DW/MFC-L5900DW/MFC-L6700DW/MFC-L6900DW

- Verification Mail for sending allows you to request notification from the receiving station where your I-Fax or email was received and processed.
- Verification Mail for receiving allows you to transmit a default report back to the sending station after successfully receiving and processing an I-Fax or email.

To use this feature, set the `[Notification]` options in the `[Setup Mail RX]` and `[Setup Mail TX]` options of your Brother machine's control panel menu.

Related Information

- I-Fax Options
- Enable Send Notifications for TX Verification Mail
- Enable Receive Notification for TX Verification Mail

Enable Send Notifications for TX Verification Mail

Related Models: MFC-L5700DN/MFC-L5755DW/MFC-L5900DW/MFC-L6700DW/MFC-L6900DW

1. Press [ ] [Settings] > [All Settings] > [Network] > [E-mail/IFAX] > [Setup Mail TX] > [Notification].
2. Select [On] or [Off] to enable or disable the Send Notification feature.

   When Send Notification is On, the fax includes an additional field, named Message Disposition Notification (MDN), that contains message delivery information. By default, Send Notification is set to Off.

   Your fax recipient's machine must support the MDN field in order to send a notification report.

3. Press .

Related Information

- Internet Fax (I-Fax) Verification Mail

Enable Receive Notification for TX Verification Mail

Related Models: MFC-L5700DN/MFC-L5755DW/MFC-L5900DW/MFC-L6700DW/MFC-L6900DW

1. Press [ ] [Settings] > [All Settings] > [Network] > [E-mail/IFAX] > [Setup Mail RX] > [Notification].
2. Press one of the three possible settings:

Option	Description
Receive Notification On	When Receive Notification is On, a template is sent back to the sender to indicate successful reception and processing of the message. These templates depend on the operation requested by the sender. Example: SUCCESS: Received From <Mail Address>
Receive Notification MDN	When Receive Notification is MDN, a report to indicate successful reception and processing is sent back to the sender if the originating station sent a request confirmation to the MDN (Message Disposition Notification) field.
Receive Notification Off	When Receive Notification is Off, all forms of receive notification are disabled and no message is sent back to the sender regardless of the request.

- To send TX Verification Mail, the Sender must configure these settings:
  - Switch [Notification] in [Setup Mail TX] to [On].
  - Switch [Header] in [Setup Mail RX] to [All] or [Subject+From+To].
- To receive TX Verification Mail, the Receiver must configure these settings:
  - Switch [Notification] in [Setup Mail RX] to [On].

3. Press .

Related Information

- Internet Fax (I-Fax) Verification Mail

Error Mail

Related Models: MFC-L5700DN/MFC-L5755DW/MFC-L5900DW/MFC-L6700DW/MFC-L6900DW

If there is a delivery error while sending an I-Fax, the mail server will send an error message back to the Brother machine and the error message will be printed.

If there is an error while receiving an I-Fax, an error message will be printed, for example, "The message being sent to the machine was not in a TIFF-F format."

To receive the error mail and have it print on your machine, in `[Setup Mail RX]`, switch the `[Header]` option to `[All]` or to `[Subject+From+To]`.

Related Information

- I-Fax Options

Use the Send Fax to Server Feature

Related Models: MFC-L5700DN/MFC-L5755DW/MFC-L5900DW/MFC-L6700DW/MFC-L6900DW

MFC-L5900DW/MFC-L6700DW/MFC-L6900DW: standard, MFC-L5700DN/MFC-L5755DW: available as a download

The Fax to Server feature allows the machine to scan a document and send it over the network to a separate fax server. The document will then be sent from the server as fax data to the destination fax number over standard phone lines. When the Fax to Server feature is set to On, all automatic fax transmissions from the machine will be sent to the fax server for fax transmission.

You can send a fax directly from the machine using the manual fax feature when the Send to Server feature is on.

(MFC-L5700DN/MFC-L5755DW)

To use this function, go to your model's **Downloads** page on the Brother Solutions Center at support.brother.com to update your machine's firmware or the program in your machine.

Related Information

- Advanced Network Features
- Before Sending a Fax to the Fax Server
- Enable Fax to Server
- Operate Fax to Server

Before Sending a Fax to the Fax Server

Related Models: MFC-L5700DN/MFC-L5755DW/MFC-L5900DW/MFC-L6700DW/MFC-L6900DW

MFC-L5900DW/MFC-L6700DW/MFC-L6900DW:standard, MFC-L5700DN/MFC-L5755DW: available as a download

To send a document to the fax server, the correct syntax for that server must be used. The destination fax number must be sent with a prefix and a suffix that match the parameters used by the fax server. In most cases, the syntax for the prefix is “fax=” and the syntax for the suffix would be the domain name of the fax server email gateway. The suffix must also include the “@” symbol at the beginning of the suffix. The prefix and the suffix information must be stored in the machine before you can use the Fax to server function. Destination fax numbers can be saved in the address book or entered using the dial pad (up to 40-digit numbers). For example: if you wanted to send a document to a destination fax number of 123-555-0001, use the following syntax:

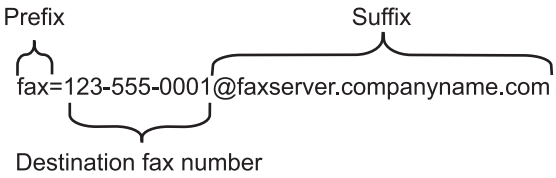

Your fax server application must support an email gateway.

Related Information

- Use the Send Fax to Server Feature

Enable Fax to Server

Related Models: MFC-L5700DN/MFC-L5755DW/MFC-L5900DW/MFC-L6700DW/MFC-L6900DW

MFC-L5900DW/MFC-L6700DW/MFC-L6900DW:standard, MFC-L5700DN/MFC-L5755DW: available as a download

- Store the prefix/suffix address for the fax server in your Brother machine.

1. Press [ ] [Settings] > [All Settings] > [Network] > [Fax to Server].
2. Press [Fax to Server].
3. Press [On].
4. Press [Prefix].
5. Enter the prefix using the touchscreen, and then press [OK].
6. Press [Suffix].
7. Enter the suffix using the touchscreen, and then press [OK].
8. Press .

Related Information

- Use the Send Fax to Server Feature

Operate Fax to Server

Related Models: MFC-L5700DN/MFC-L5755DW/MFC-L5900DW/MFC-L6700DW/MFC-L6900DW

1. Place the document in the ADF or on the scanner glass.
2. Enter the fax number.
3. Press `[Fax Start]`.

The machine will send the message over a TCP/IP network to the fax server.

Related Information

- Use the Send Fax to Server Feature

Print the WLAN Report

Related Models: MFC-L5755DW/MFC-L5900DW/MFC-L6700DW/MFC-L6900DW

The WLAN Report reflects your machine's wireless status. If the wireless connection fails, check the error code on the printed report.

1. Press [ ] [Settings] > [All Settings] > [Print Reports] > [WLAN Report].
2. Press [Yes].

   The machine will print the WLAN Report.
3. Press .

If the WLAN Report does not print, check your machine for errors. If there are no visible errors, wait for one minute and then try to print the report again.

Related Information

- Advanced Network Features
- Wireless LAN Report Error Codes
- My Brother Machine Cannot Print, Scan, or PC-FAX Receive over the Network
- I Want to Check that My Network Devices are Working Correctly

Wireless LAN Report Error Codes

Related Models: MFC-L5755DW/MFC-L5900DW/MFC-L6700DW/MFC-L6900DW

If the Wireless LAN Report shows that the connection failed, check the error code on the printed report and see the corresponding instructions in the table:

Error Code	Problem and Recommended Solutions
TS-01	The wireless setting is not activated, change the wireless setting to ON. If a network cable is connected to your machine, disconnect it and change the wireless setting of your machine to ON.
TS-02	The wireless access point/router cannot be detected. 1. Check the following two points: • Unplug the power to your wireless access point/router, wait for 10 seconds, and then plug it back in. • If your WLAN access point/router is using MAC address filtering, confirm that the MAC address of the Brother machine is allowed in the filter. 2. If you manually entered the SSID and security information (SSID/authentication method/encryption method/Network Key), the information may be incorrect. Reconfirm the SSID and security information and re-enter the correct information as necessary. How to confirm wireless security information (SSID/authentication method/encryption method/Network Key) a. The Default security settings may be provided on a label attached to the WLAN access point/router. Or the manufacturer's name or model no. of the WLAN access point/router may be used as the default security settings. b. See the documentation provided with your WLAN access point/router for information on how to find the security settings. • If WLAN access point/router is set to not broadcast the SSID, the SSID will not automatically be detected. You will have to manually enter the SSID name. • The Network key may also be described as the Password, Security Key or Encryption Key. This device does not support a 5GHz SSID/ESSID and you must select a 2.4 GHz SSID/ESSID. Make sure the access point/router is set to 2.4 GHz or 2.4 GHz/5 GHz mixed mode. If you do not know the SSID and wireless security settings of your WLAN access point/router or how to change the configuration, see the documentation provided with your WLAN access point/router, ask the manufacturer of your access point/router or ask to your Internet provider or network administrator.
TS-03	The wireless network and security setting you entered may be incorrect. Reconfirm the wireless network settings. If you do not know this information, ask your network administrator.

Error Code	Problem and Recommended Solutions
TS-04	The Authentication/Encryption methods used by the selected wireless access point/router are not supported by your machine. For infrastructure mode, change the authentication and encryption methods of the wireless access point/router. Your machine supports the following authentication methods: • WPA-Personal TKIP or AES • WPA2-Personal AES • Open WEP or None (without encryption) • Shared key WEP If your problem is not solved, the SSID or network settings you entered may be incorrect. Confirm the wireless network settings. For Ad-Hoc Mode, change the authentication and encryption methods of your computer for the wireless setting. Your machine supports Open authentication only, with optional WEP encryption.
TS-05	The security information (SSID/Network Key) is incorrect. Confirm the SSID and Network Key. If your router uses WEP encryption, enter the key used as the first WEP key. Your Brother machine supports the use of the first WEP key only.
TS-06	The wireless security information (Authentication method/Encryption method/Network Key) is incorrect. Confirm the wireless security information (Authentication method/Encryption method/Network Key) listed in TS-04. If your router uses WEP encryption, enter the key used as the first WEP key. Your Brother machine supports the use of the first WEP key only.
TS-07	The machine cannot detect a WLAN access point/router that has WPS enabled. If you would like to connect with WPS, you must operate both your machine and the WLAN access point/router. Confirm the connection method for WPS on WLAN access point/router and try starting again. If you do not know how to operate your WLAN access point/router using WPS, see the documentation provided with your WLAN access point/router, ask the manufacturer of your WLAN access point/router or ask your network administrator.
TS-08	Two or more WLAN access points that have WPS enabled are detected. • Confirm that only one WLAN access point/router within range has the WPS method active and try again. • Try starting again after few minutes in order to avoid effects from other access points.

Related Information

- Print the WLAN Report
- My Brother Machine Cannot Print, Scan, or PC-FAX Receive over the Network
- I Want to Check that My Network Devices are Working Correctly
- Configure Your Machine for a Wireless Network Using the One Push Method of Wi-Fi Protected Setup™ (WPS)
- Configure Your Machine for a Wireless Network Using the PIN Method of Wi-Fi Protected Setup™ (WPS)
- Configure Your Machine for a Wireless Network in Ad-Hoc Mode Using an Existing SSID
- Configure Your Machine for a Wireless Network in Ad-Hoc Mode Using a New SSID
- Configure Your Machine for a Wireless Network Using the Machine's Control Panel Setup Wizard
- Configure Your Machine for a Wireless Network When the SSID Is Not Broadcast
- Configure Your Machine for an Enterprise Wireless Network

Configure and Operate LDAP Search

MFC-L5900DW/MFC-L6700DW/MFC-L6900DW: standard, DCP-L5600DN/MFC-L5700DN/MFC-L5755DW: available as a download

The LDAP feature allows you to search for information, such as fax numbers and email addresses, on your server. When you use the Fax, I-Fax, or Scan to Email server feature, you can use the LDAP search to find fax numbers or email addresses.

- The LDAP feature does not support simplified Chinese, traditional Chinese, or Korean.
- The LDAP feature supports LDAPv3.
- The LDAP feature does not support SSL/TLS.
- (DCP-L5600DN/MFC-L5700DN/MFC-L5755DW)

  To use this function, go to your model's **Downloads** page on the Brother Solutions Center at support.brother.com to update your machine's firmware or the program in your machine.

Related Information

- Advanced Network Features
- Change LDAP Configuration Using Web Based Management
- Perform an LDAP Search Using Your Machine's Control Panel

Change LDAP Configuration Using Web Based Management

Use Web Based Management to configure your LDAP settings in a web browser.

1. Start your web browser.
2. Type "http://machine's IP address" in your browser's address bar (where "machine's IP address" is the machine's IP address).

   For example:

   http://192.168.1.2
3. No password is required by default. Type a password if you have set one, and then click .
4. Click **Network** on the machine's web page.
5. Click **Protocol** in the left navigation bar.
6. Select the **LDAP** check box, and then click **Submit**.
7. Restart your Brother machine to activate the configuration.
8. On your computer, in Web Based Management's **Address Book** tab, select **LDAP** in the left navigation bar.
   - **LDAP Search**
   - **LDAP Server Address**
   - **Port** (The default port number is 389.)
   - **Search Root**
   - **Authentication**
   - **Username**

     This selection will be available depending on the authentication method used.
   - **Password**

     This selection will be available depending on the authentication method used.

   - If the LDAP server supports Kerberos authentication, we recommend selecting Kerberos for the Authentication settings. It provides strong authentication between the LDAP server and your machine.
   - You must configure the SNTP protocol (network time server), or you must set the date, time and time zone correctly on the control panel for Kerberos authentication.

   - **Kerberos Server Address**

     This selection will be available depending on the authentication method used.
   - **Timeout for LDAP**
   - **Attribute of Name (Search Key)**
   - **Attribute of E-mail**
   - **Attribute of Fax Number**
9. When finished, click **Submit**. Make sure the **Status** field reads **OK**.

Related Information

- Configure and Operate LDAP Search
- Synchronize Time with the SNTP Server Using Web Based Management

Perform an LDAP Search Using Your Machine's Control Panel

After you configure LDAP settings, you can use the LDAP search feature to find fax numbers or email addresses to use for:

- Sending a Fax (not available for DCP models)
- Sending an Internet Fax (I-Fax) (not available for DCP models)
- Scanning to Email Server

- The LDAP feature supports LDAPv3.
- The LDAP feature does not support SSL/TLS.
- You may need to use Kerberos Authentication or Simple Authentication to connect to your LDAP server, depending on the security policy set by your network administrator.
- You must configure the SNTP protocol (network time server), or you must set the date, time and time zone correctly on the control panel for Kerberos authentication.

1. Press to search.
2. Enter the initial characters for your search using the LCD.
3. Press [OK].

   The LDAP search result will be shown on the LCD; the icon appears before the email (local) address book search results.

   - If there is no match on the server or the email (local) address book, the LCD displays [Results cannot be found.] for about 60 seconds.
4. Swipe up or down or press ▲ or ▼ to display the name you want.
5. Press the name.

   To view the details of the name, press [Detail].
6. If the result includes more than one fax number or email address, the machine will prompt you to select just one. Press [Apply]. Do one of the following:
   - If you are sending a fax or an I-Fax, press [Send a fax].
   - If you are scanning to the Email Server, load your document, press [OK], and then press [Start].

Related Information

- Configure and Operate LDAP Search
- Synchronize Time with the SNTP Server Using Web Based Management

Synchronize Time with the SNTP Server Using Web Based Management

The Simple Network Time Protocol (SNTP) is used to synchronize the time used by the machine for authentication with the SNTP time server. (This is not the time displayed on the machine's LCD.) You can automatically or manually synchronize the machine's time with the Coordinated Universal Time (UTC) provided by the SNTP time server.

- Configure Date and Time Using Web Based Management
- Configure the SNTP Protocol Using Web Based Management
- Configure the Store Print Log to Network Settings Using Web Based Management
- Change LDAP Configuration Using Web Based Management
- Perform an LDAP Search Using Your Machine's Control Panel

Configure Date and Time Using Web Based Management

Configure date and time to synchronize the time used by the machine with the SNTP time server.

This feature is not available in some countries.

1. Start your web browser.
2. Type "http://machine's IP address" in your browser's address bar (where "machine's IP address" is the machine's IP address).

   For example:

   http://192.168.1.2
3. No password is required by default. Type a password if you have set one, and then click .
4. Click the **Administrator** tab.
5. Click **Date&Time** in the left navigation bar.

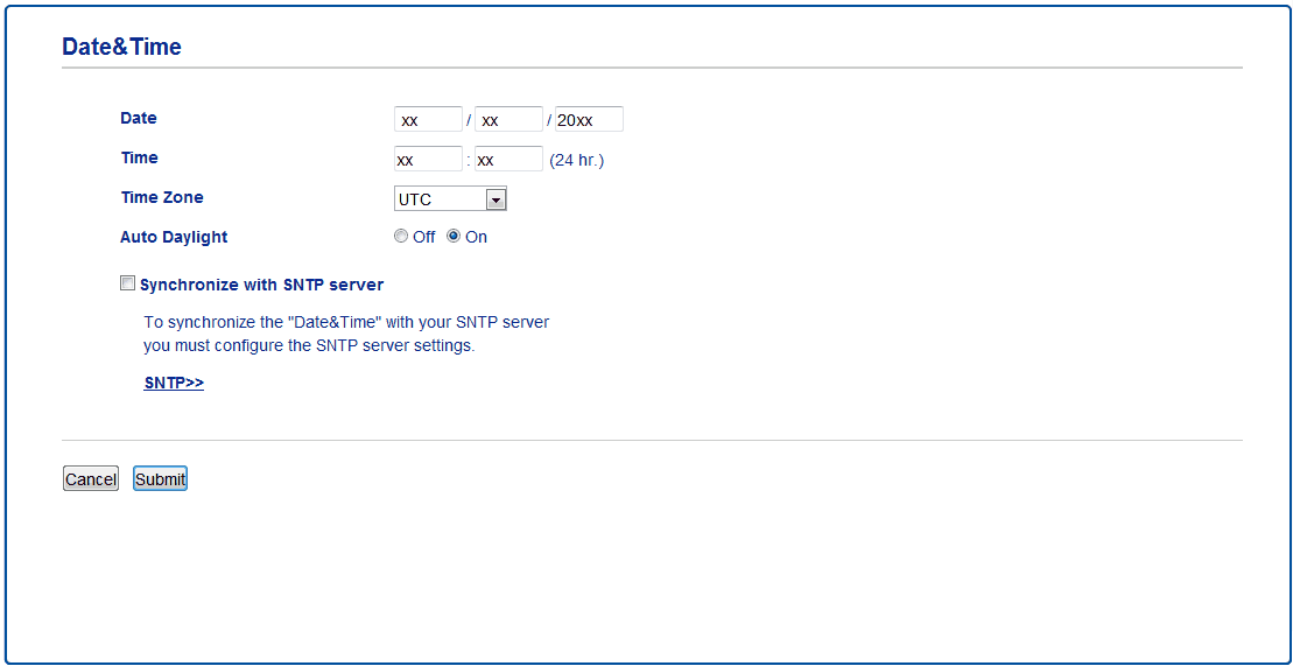

Select the time difference between your location and UTC from the **Time Zone** drop-down list. For example, the time zone for Eastern Time in the USA and Canada is UTC-05:00.

6. Verify the **Time Zone** settings.
7. Select the **Synchronize with SNTP server** check box.
8. Click **Submit**.

Related Information

- Synchronize Time with the SNTP Server Using Web Based Management

Configure the SNTP Protocol Using Web Based Management

Configure the SNTP protocol to synchronize the time the machine uses for authentication with the time kept by the SNTP time server.

1. Start your web browser.
2. Type "http://machine's IP address" in your browser's address bar (where "machine's IP address" is the machine's IP address).

   For example:

   http://192.168.1.2
3. No password is required by default. Type a password if you have set one, and then click .
4. Click the **Network** tab.
5. Click **Protocol** in the left navigation bar.
6. Select the **SNTP** check box to activate the settings.
7. Restart your Brother machine to activate the configuration.
8. Next to the SNTP check box, click **Advanced Settings** and follow the instructions below:

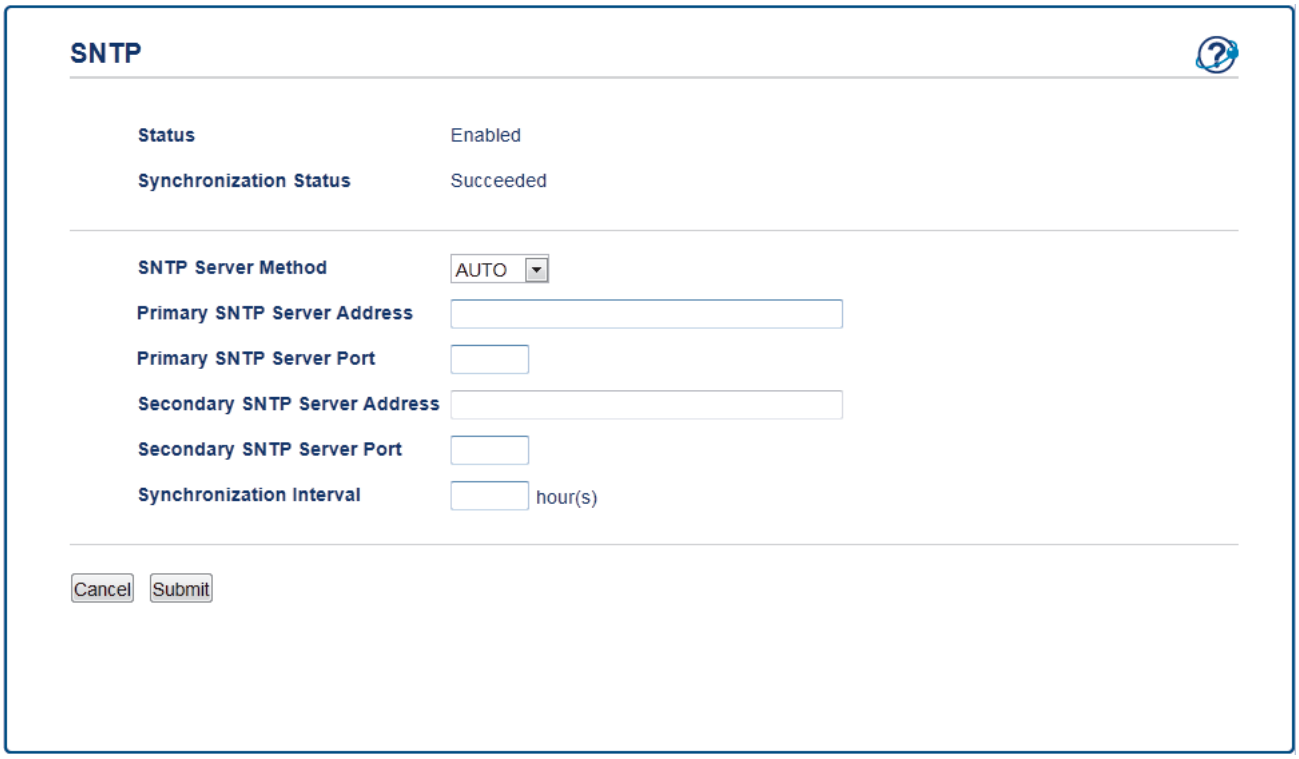

Option	Description
Status	Displays whether the SNTP protocol is enabled or disabled.
Synchronization Status	Confirm the latest synchronization status.
SNTP Server Method	Select **AUTO** or **STATIC**. • **AUTO** If you have a DHCP server in your network, the SNTP server will obtain the address from that server automatically. • **STATIC** Type the address you want to use.

Option	Description
Primary SNTP Server Address **Secondary SNTP Server Address**	Type the server address (up to 64 characters). The secondary SNTP server address is used as a backup to the primary SNTP server address. If the primary server is unavailable, the machine will contact the secondary SNTP server.
Primary SNTP Server Port **Secondary SNTP Server Port**	Type the port number (1-65535). The secondary SNTP server port is used as a backup to the primary SNTP server port. If the primary port is unavailable, the machine will contact the secondary SNTP port.
Synchronization Interval	Type the number of hours between server synchronization attempts (1-168 hours).

9. Click **Submit**.

Related Information

- Synchronize Time with the SNTP Server Using Web Based Management
- Configure the Store Print Log to Network Settings Using Web Based Management

Technical Information for Advanced Users

- Gigabit Ethernet (Wired Network Only)
- Reset the Network Settings to the Factory Settings

Gigabit Ethernet (Wired Network Only)

Related Models: MFC-L5900DW/MFC-L6700DW/MFC-L6900DW

Your machine supports 1000BASE-T Gigabit Ethernet. To connect to a 1000BASE-T Gigabit Ethernet Network, you must set the machine's Ethernet link mode to Auto from the machine's control panel or Web Based Management (web browser).

- Use a straight-through Category 5 (or greater) twisted-pair cable for 10BASE-T, 100BASE-TX Fast Ethernet Network, or 1000BASE-T Gigabit Ethernet Network. When you connect the machine to a Gigabit Ethernet Network, use the network devices complying with 1000BASE-T.

Related Information

- Technical Information for Advanced Users
- Configure the Gigabit Ethernet Settings Using Web Based Management

Configure the Gigabit Ethernet Settings Using Web Based Management

Related Models: MFC-L5900DW/MFC-L6700DW/MFC-L6900DW

1. Start your web browser.
2. Type "http://machine's IP address" in your browser's address bar (where "machine's IP address" is the machine's IP address).

   For example:

   http://192.168.1.2
3. No password is required by default. Type a password if you have set one, and then click .
4. Click the **Network** tab.
5. Click **Wired**.
6. Click **Ethernet** in the left navigation bar.
7. Select **Auto** from the **Ethernet Mode** drop-down list.
8. Click **Submit**.
9. To enable the settings, restart your machine.

You can confirm your settings by printing the Network Configuration Report.

Related Information

- Gigabit Ethernet (Wired Network Only)
- Print the Network Configuration Report

Reset the Network Settings to the Factory Settings

You can use your machine's control panel to reset the print server to its default factory settings. This resets all information, such as the password and IP address.

- This feature restores all wired (supported models only) and wireless network settings to the factory settings.
- You can also reset the print server to its factory settings using BRAdmin Light, BRAdmin Professional, or Web Based Management.

1. Press [ ] [Settings] > [All Settings] > [Network] > [Network Reset].
2. [Machine will reboot after resetting. Press [OK] for 2 seconds to confirm.] appears. Press [OK] for two seconds to confirm.

   The machine will restart.

Related Information

- Technical Information for Advanced Users

Security

- Lock the Machine Settings
- Network Security Features

Lock the Machine Settings

Before turning on the machine's Access Lock, make a careful note of your password. If you forget the password, you must reset all passwords stored in the machine by contacting your administrator or Brother customer service.

- About Using Setting Lock

About Using Setting Lock

Use the Setting Lock feature to block unauthorised access to machine settings.
When Setting Lock is set to [On], you cannot access the machine settings without entering the password.

- Set the Setting Lock Password
- Change the Setting Lock Password
- Turn Setting Lock On

Set the Setting Lock Password

1. Press [Settings] > [All Settings] > [General Setup] > [Setting Lock].
2. Enter a four-digit number for the password.
3. Press [OK].
4. When the LCD displays [Verify:], re-enter the password.
5. Press [OK].
6. Press .

Related Information

- About Using Setting Lock

Change the Setting Lock Password

1. Press [Settings] > [All Settings] > [General Setup] > [Setting Lock] > [Set Password].
2. Enter the current four-digit password.
3. Press [OK].
4. Enter a new four-digit password.
5. Press [OK].
6. When the LCD displays [Verify:], re-enter the password.
7. Press [OK].
8. Press .

Related Information

- About Using Setting Lock

Turn Setting Lock On

1. Press [Settings] > [All Settings] > [General Setup] > [Setting Lock] > [Lock Off⇒On].
2. Enter the current four-digit password.
3. Press [OK].

To turn Setting Lock [Off], press on the LCD, enter the current four-digit password, and then press [OK].

Related Information

- About Using Setting Lock

Network Security Features

- Before Using Network Security Features
- Secure Function Lock 3.0
- Use Active Directory Authentication
- Use LDAP Authentication
- Manage Your Network Machine Securely Using SSL/TLS
- Manage Your Network Machine Securely Using IPsec
- Send or Receive an Email Securely
- Use IEEE 802.1x Authentication for a Wired or a Wireless Network
- Store Print Log to Network

Before Using Network Security Features

Your Brother machine employs some of the latest network security and encryption protocols available today. These network features can be integrated into your overall network security plan to help protect your data and prevent unauthorised access to the machine.

We recommend disabling the Telnet, FTP server and TFTP protocols. Accessing the machine using these protocols is not secure.

Related Information

- Network Security Features

Secure Function Lock 3.0

Brother's Secure Function Lock 3.0 increases security by restricting the functions available on your Brother machine.

- Before Using Secure Function Lock 3.0
- Configure Secure Function Lock 3.0 Using Web Based Management
- Scan Using Secure Function Lock 3.0
- Configure Public Mode for Secure Function Lock 3.0
- Additional Secure Function Lock 3.0 Features
- Register a new ID Card Using Machine's Control Panel

Before Using Secure Function Lock 3.0

Use Secure Function Lock to configure passwords, set specific user page limits, and grant access to some or all of the functions listed here.

You can configure and change the following Secure Function Lock 3.0 settings using Web Based Management or BRAdmin Professional (Windows):

- **Print**

  Print includes print jobs sent via AirPrint, Google Cloud Print™ and Brother iPrint&Scan.

  If you register users' login names in advance, the users will not need to enter their passwords when they use the print function.
- **Copy**
- **Scan**

  Scan includes scan jobs sent via Brother iPrint&Scan.
- **Send** (supported models only)
- **Receive** (supported models only)
- USB Direct Print
- Scan to USB (supported models only)
- **Web Connect** (supported models only)
- **Apps** (supported models only)
- **Page Limits**
- **Page Counters**
- **Card ID (NFC ID)** (supported models only)

  If you register users' Card IDs in advance, a registered user can activate the machine by touching his registered card to the machine's NFC logo.

Related Information

- Secure Function Lock 3.0

Configure Secure Function Lock 3.0 Using Web Based Management

1. Start your web browser.
2. Type "http://machine's IP address" in your browser's address bar (where "machine's IP address" is the machine's IP address).

   For example:

   http://192.168.1.2
3. No password is required by default. Type a password if you have set one, and then click .
4. Click the **Administrator** tab.
5. Click the **User Restriction Function** menu in the left navigation bar.
6. Select **Secure Function Lock**.
7. Click **Submit**.
8. Click the **Restricted Functions** menu in the left navigation bar.
9. In the **User List / Restricted Functions** field, type a group name or user name (alphanumeric, up to 15 digits).
10. In the **Print** and the other columns, select a check box to allow or clear a check box to restrict the function listed.
11. To configure the maximum page count, select the **On** check box in the **Page Limits** column, and then type the maximum number in the **Max. Pages** field.
12. Click **Submit**.
13. Click the **User List** menu in the left navigation bar.
14. In the **User List** field, type the user name.
15. In the **PIN Number** field, type a four-digit password.
16. In the **E-mail Address** field, type the user's email address (Available only for certain models).

    If this option is not available, update your machine's firmware. Go to your model's **Downloads** page on the Brother Solutions Center at support.brother.com.
17. To register the user's Card ID, type the card number in the **Card ID (NFC ID)** field (Available only for certain models).
18. Select **User List / Restricted Functions** from the drop-down list for each user.
19. Click **Submit**.

Related Information

- Secure Function Lock 3.0

Scan Using Secure Function Lock 3.0

Setting Scan restrictions (for administrators)

Secure Function Lock 3.0 allows an administrator to restrict which users are allowed to scan. When the Scan feature is set to Off for the public user setting, only users who have the **Scan** check box selected will be able to scan.

Using the Scan feature (for restricted users)

- To scan using the machine's control panel:

  Restricted users must enter their PINs on the machine's control panel to access Scan mode.
- To scan from a computer:

  Restricted users must enter their PINs on the machine's control panel before scanning from their computers. If the PIN is not entered on the machine's control panel, an error message will appear on the user's computer.

Related Information

- Secure Function Lock 3.0

Configure Public Mode for Secure Function Lock 3.0

Use the Secure Function Lock screen to set up Public Mode, which limits the functions available to public users. Public users will not need to enter a password to access the features made available through Public Mode settings.

Public Mode includes print jobs sent via AirPrint, Google Cloud Print™ and Brother iPrint&Scan.

1. Start your web browser.
2. Type "http://machine's IP address" in your browser's address bar (where "machine's IP address" is the machine's IP address).

   For example:

   http://192.168.1.2
3. No password is required by default. Type a password if you have set one, and then click .
4. Click the **Administrator** tab.
5. Click the **User Restriction Function** menu in the left navigation bar.
6. Select **Secure Function Lock**.
7. Click **Submit**.
8. Click the **Restricted Functions** menu.
9. In the **Public Mode** row, select a check box to allow or clear a check box to restrict the function listed.
10. Click **Submit**.

Related Information

- Secure Function Lock 3.0

Additional Secure Function Lock 3.0 Features

Configure the following features in the Secure Function Lock screen:

All Counter Reset

Click **All Counter Reset**, in the **Page Counters** column, to reset the page counter.

Export to CSV file

Click **Export to CSV file**, to export the current page counter including **User List / Restricted Functions** information as a CSV file.

Card ID (NFC ID) (supported models only)

Click the **User List** menu, and then type a users' Card ID in the **Card ID (NFC ID)** field. You can use your ID card for authentication.

Last Counter Record

Click **Last Counter Record** if you want the machine to retain the page count after the counter has been reset.

Counter Auto Reset

Click **Counter Auto Reset** to configure the time interval you want between page counter reset. Choose a daily, weekly, or monthly interval.

Related Information

- Secure Function Lock 3.0

Register a new ID Card Using Machine's Control Panel

Related Models: MFC-L6900DW

1. Touch the NFC logo on the machine's control panel with a registered ID Card.
2. Press `[Register Card]`.
3. Touch a new ID Card to the NFC logo.

   The new ID Card's number is registered to the machine.

   For the supported ID Card types, go to the Brother Solutions Center at support.brother.com to see **FAQs & Troubleshooting**.

4. Press `[OK]`.

Related Information

- Secure Function Lock 3.0

Use Active Directory Authentication

- Introduction to Active Directory Authentication
- Configure Active Directory Authentication Using Web Based Management
- Log On to Change the Machine Settings Using the Machine's Control Panel (Active Directory Authentication)

Introduction to Active Directory Authentication

Active Directory Authentication restricts the use of your Brother machine. If Active Directory Authentication is enabled, the machine's control panel will be locked. You cannot change the machine's settings until you enter a User ID and password.

Active Directory Authentication offers the following features:

- Stores incoming print data
- Stores incoming fax data
- Obtains the email address from the LDAP server based on your User ID, when sending scanned data to an email server.

  To use this feature, select the **On** option for the **Get Mail Address** setting and **LDAP + kerberos** authentication method. Your email address will be set as the sender when the machine sends scanned data to an email server. If the machine cannot locate your email address, the machine's email address will be set as the sender.

When Active Directory Authentication is enabled, your machine stores all incoming fax data. After you log on, the machine prints the stored fax data.

You can change the Active Directory Authentication settings using Web Based Management or BRAdmin Professional (Windows).

Related Information

- Use Active Directory Authentication

Configure Active Directory Authentication Using Web Based Management

Active Directory authentication supports Kerberos authentication and NTLMv2 authentication. You must configure the SNTP protocol (network time server) and DNS server configuration for authentication.

1. Start your web browser.
2. Type "http://machine's IP address" in your browser's address bar (where "machine's IP address" is the machine's IP address).

   For example:

   http://192.168.1.2
3. No password is required by default. Type a password if you have set one, and then click .
4. Click the **Administrator** tab.
5. Click the **User Restriction Function** menu in the left navigation bar.
6. Select **Active Directory Authentication**.
7. Click **Submit**.
8. Select **Active Directory Authentication** in the left navigation bar.
9. Configure the following settings:

Option	Description
Storage PC Print Data	Select this option to store incoming print data. After you log on to the machine, your PC print jobs will be printed automatically. This feature is available only for print data created by a Brother native printer driver.
Storage Fax RX Data	Select this option to store incoming fax data. You can print all incoming fax data after you log on to the machine.
Remember User ID	Select this option to save your User ID.
Active Directory Server Address	Type the IP address or the server name (for example: ad.example.com) of the Active Directory Server.
Active Directory Domain Name	Type the Active Directory domain name.
Protocol & Authentication Method	Select the protocol and authentication method.
Get Mail Address [1]	Select this option to obtain logged on user's email address from the LDAP server. (available only for **LDAP + kerberos** authentication method)
Get User's Home Directory [1]	Select this option to obtain your home directory as the Scan to Network destination. (available only for **LDAP + kerberos** authentication method)
LDAP Server Port	Type the LDAP server port number (available only for **LDAP + kerberos** authentication method).
LDAP Search Root	Type the LDAP search root (available only for **LDAP + kerberos** authentication method).

1 If this option is not available, update your machine's firmware. Go to your model's **Downloads** page on the Brother Solutions Center at support.brother.com.

10. Click **Submit**.

Related Information

- Use Active Directory Authentication

Log On to Change the Machine Settings Using the Machine's Control Panel (Active Directory Authentication)

When Active Directory Authentication is enabled, the machine's control panel will be locked until you enter your User ID and password on the machine's control panel.

1. On the machine's control panel, use the touchscreen to enter your User ID and Password.
2. Press [OK].
3. When authentication is successful, the machine's control panel will be unlocked.

Related Information

- Use Active Directory Authentication

Use LDAP Authentication

- Introduction to LDAP Authentication
- Configure LDAP Authentication Using Web Based Management
- Log On to Change the Machine Settings Using the Machine's Control Panel (LDAP Authentication)

Introduction to LDAP Authentication

LDAP Authentication restricts the use of your Brother machine. If LDAP Authentication is enabled, the machine's control panel will be locked. You cannot change the machine's settings until you enter a User ID and password.

LDAP Authentication offers the following features:

- Stores incoming print data
- Stores incoming fax data
- Obtains the email address from the LDAP server based on your User ID, when sending scanned data to an email server.

  To use this feature, select the **On** option for the **Get Mail Address** setting. Your email address will be set as the sender when the machine sends scanned data to an email server. If the machine cannot locate your email address, the machine's email address will be set as the sender.

When LDAP Authentication is enabled, your machine stores all incoming fax data. After you log on, the machine prints the stored fax data.

You can change the LDAP Authentication settings using Web Based Management or BRAdmin Professional (Windows).

Related Information

- Use LDAP Authentication

Configure LDAP Authentication Using Web Based Management

1. Start your web browser.
2. Type "http://machine's IP address" in your browser's address bar (where "machine's IP address" is the machine's IP address).

   For example:

   http://192.168.1.2
3. No password is required by default. Type a password if you have set one, and then click .
4. Click the **Administrator** tab.
5. Click the **User Restriction Function** menu in the left navigation bar.
6. Select **LDAP Authentication**.
7. Click **Submit**.
8. Click **LDAP Authentication** in the left navigation bar.
9. Configure the following settings:

Option	Description
Storage PC Print Data	Select this option to store incoming print data. After you log on to the machine, your PC print jobs will be printed automatically. This feature is available only for print data created by a Brother native printer driver.
Storage Fax RX Data	Select this option to store incoming fax data. You can print all incoming fax data after you log on to the machine.
Remember User ID	Select this option to save your User ID.
LDAP Server Address	Type the IP address or the server name (for example: ad.example.com) of the LDAP server.
Get Mail Address [1]	Select this option to obtain logged on user's email address from the LDAP server.
Get User's Home Directory [1]	Select this option to obtain your home directory as the Scan to Network destination.
LDAP Server Port	Type the LDAP server port number.
LDAP Search Root	Type the LDAP search root directory.
Attribute of Name (Search Key)	Type the attribute you want to use as a search key.

1 If this option is not available, update your machine's firmware. Go to your model's **Downloads** page on the Brother Solutions Center at support.brother.com.

10. Click **Submit**.

Related Information

- Use LDAP Authentication

Log On to Change the Machine Settings Using the Machine's Control Panel (LDAP Authentication)

When LDAP Authentication is enabled, the machine's control panel will be locked until you enter your User ID and password on the machine's control panel.

1. On the machine's control panel, use the touchscreen to enter your User ID and Password.
2. Press [OK].
3. When authentication is successful, the machine's control panel will be unlocked.

Related Information

- Use LDAP Authentication

Manage Your Network Machine Securely Using SSL/TLS

- Introduction to SSL/TLS
- Certificates and Web Based Management
- Manage Your Network Machine Securely Using Web Based Management
- Manage Your Network Machine Securely Using BRAdmin Professional (Windows)
- Print Documents Securely Using SSL/TLS

Introduction to SSL/TLS

Secure Socket Layer (SSL) or Transport Layer Security (TLS) is an effective method of protecting data sent over a local or wide area network (LAN or WAN). It works by encrypting data, such as a print job, sent over a network, so anyone trying to capture it will not be able to read it.

SSL/TLS can be configured on both wired and wireless networks and will work with other forms of security such as WPA keys and firewalls.

Related Information

- Manage Your Network Machine Securely Using SSL/TLS
- Brief History of SSL/TLS
- Benefits of Using SSL/TLS

Brief History of SSL/TLS

SSL/TLS was originally created to secure web traffic information, particularly data sent between web browsers and servers. For example, when you use Internet Explorer for Internet Banking and you see https:// and the little padlock icon in the web browser, you are using SSL. SSL grew to work with additional applications, such as Telnet, printer, and FTP software, in order to become a universal solution for online security. Its original design intentions are still being used today by many online retailers and banks to secure sensitive data, such as credit card numbers, customer records, etc.

SSL/TLS uses extremely high levels of encryption and is trusted by banks all over the world.

Related Information

- Introduction to SSL/TLS

Benefits of Using SSL/TLS

The primary benefit of using SSL/TLS on Brother machines is to guarantee secure printing over an IP network by restricting unauthorised users from reading data sent to the machine. SSL's key selling point is that it can be used to print confidential data securely. For example, an HR department in a large company may be printing wage slips on a regular basis. Without encryption, the data contained on these wages slips can be read by other network users. However, with SSL/TLS, anyone trying to capture the data will see a confusing page of code and not the actual wage slip.

Related Information

- Introduction to SSL/TLS

Certificates and Web Based Management

You must configure a certificate to manage your networked Brother machine securely using SSL/TLS. You must use Web Based Management to configure a certificate.

- Supported Security Certificate Features
- Create and Install a Certificate
- Manage Multiple Certificates

Supported Security Certificate Features

Your Brother machine supports the use of multiple security certificates, which allows secure management, authentication, and communication with the machine. The following security certificate features can be used with the machine:

- SSL/TLS communication
- SSL communcation for SMTP/POP3/IMAP4 (only available for certain models)
- IEEE 802.1x authentication
- IPsec

The Brother machine supports the following:

- Pre-installed certificate

  Your machine has a pre-installed self-signed certificate. This certificate enables you to use SSL/TLS communication without creating or installing a different certificate.

  The pre-installed self-signed certificate cannot protect your communication from being compromised. We recommend using a certificate that is issued by a trusted organization for better security.

- Self-signed certificate

  This print server issues its own certificate. Using this certificate, you can easily use the SSL/TLS communication without creating or installing a different certificate from a CA.

- Certificate from a Certificate Authority (CA)

  There are two methods for installing a certificate from a CA. If you already have a certificate from a CA or if you want to use a certificate from an external trusted CA:

  - When using a Certificates Signing Request (CSR) from this print server.
  - When importing a certificate and a private key.

- Certificate Authority (CA) Certificate

  To use a CA certificate that identifies the CA and owns its private key, you must import that CA certificate from the CA before configuring the security features of the Network.

  - If you are going to use SSL/TLS communication, we recommend contacting your system administrator first.
  - When you reset the print server back to its default factory settings, the certificate and the private key that are installed will be deleted. If you want to keep the same certificate and the private key after resetting the print server, export them before resetting, and then reinstall them.

Related Information

- Certificates and Web Based Management

Create and Install a Certificate

- Step by Step Guide for Creating and Installing a Certificate
- Create and Install a Self-signed Certificate
- Create and Install a Certificate from a Certificate Authority (CA)
- Import and Export a CA Certificate

Step by Step Guide for Creating and Installing a Certificate

There are two options when choosing a security certificate: use a self-signed certificate or use a certificate from a Certificate Authority (CA).

These are a brief summary of the actions required, based on the option you choose.

Option 1

Self-Signed Certificate

1. Create a self-signed certificate using Web Based Management.
2. Install the self-signed certificate on your computer.

Option 2

Certificate from a CA

1. Create a Certificate Signing Request (CSR) using Web Based Management.
2. Install the certificate issued by the CA on your Brother machine using Web Based Management.
3. Install the certificate on your computer.

Related Information

- Create and Install a Certificate

Create and Install a Self-signed Certificate

- Create a Self-signed Certificate
- Install the Self-signed Certificate for Windows users with Administrator Rights
- Import and Export the Self-signed Certificate on your Brother Machine

Create a Self-signed Certificate

1. Start your web browser.
2. Type "http://machine's IP address" in your browser's address bar (where "machine's IP address" is the machine's IP address).

   For example:

   http://192.168.1.2

   - If you are using a Domain Name System or enable a NetBIOS name, you can type another name, such as "SharedPrinter" instead of the IP address.
     - For example:

       http://SharedPrinter

     If you enable a NetBIOS name, you can also use the node name.
     - For example:

       http://brnxxxxxxxxxxxx

     The NetBIOS name can be found in the Network Configuration Report.
   - For Mac, access Web Based Management by clicking the machine's icon on the **Status Monitor** screen.

3. No password is required by default. Type a password if you have set one, and then click .
4. Click the **Network** tab.
5. Click the **Security** tab.
6. Click **Certificate**.
7. Click **Create Self-Signed Certificate**.
8. Enter a **Common Name** and a **Valid Date**.
   - The length of the **Common Name** is less than 64 bytes. Enter an identifier, such as an IP address, node name, or domain name to use when accessing this machine through SSL/TLS communication. The node name is displayed by default.
   - A warning will appear if you use the IPPS or HTTPS protocol and enter a different name in the URL than the **Common Name** that was used for the self-signed certificate.
9. Select your setting from the **Public Key Algorithm** drop-down list. The default setting is **RSA(2048bit)**.
10. Select your setting from the **Digest Algorithm** drop-down list. The default setting is **SHA256**.
11. Click **Submit**.
12. Click **Network**.
13. Click **Protocol**.
14. Click **HTTP Server Settings**.
15. Select the certificate you want to configure from the **Select the Certificate** drop-down list.
16. Click **Submit**.

    The following screen appears.

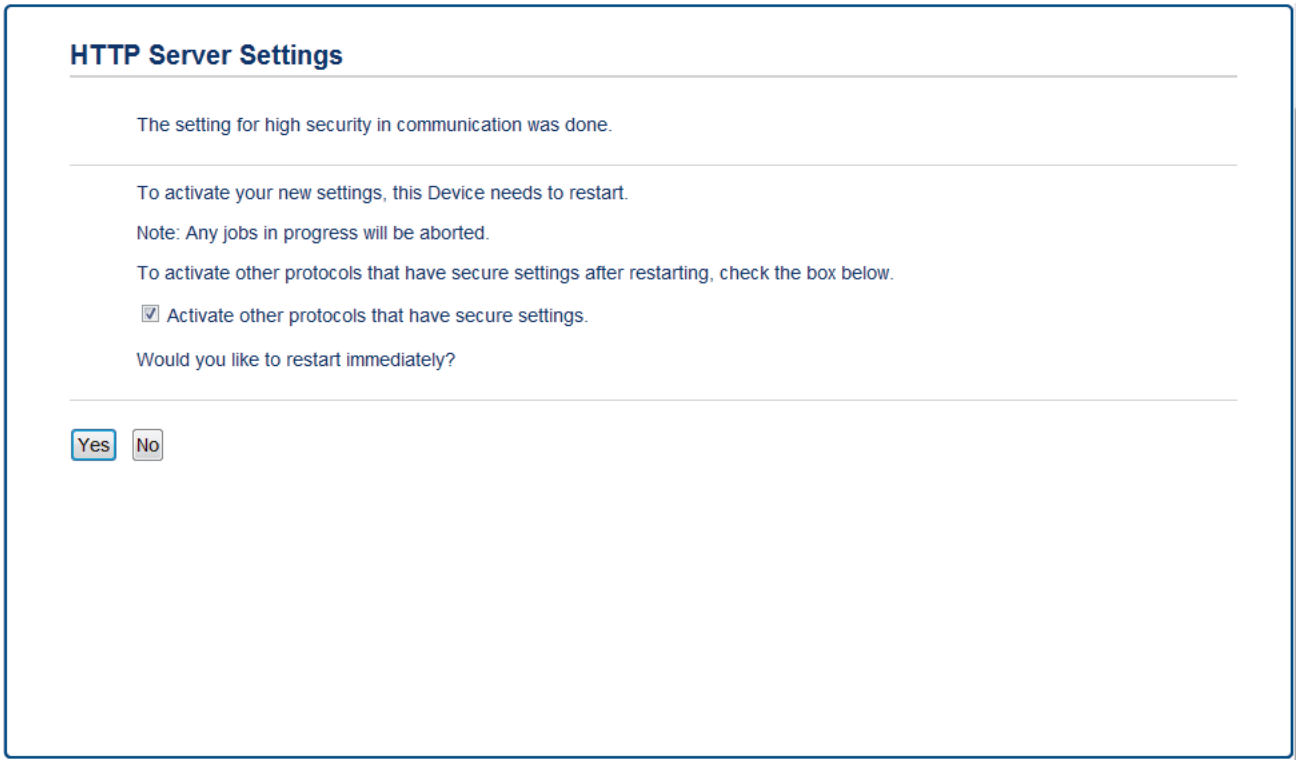

17. Click **Yes** to restart your print server.

The self-signed certificate is created and saved in your machine's memory.

To use SSL/TLS communication, the self-signed certificate must be installed on your computer.

Related Information

- Create and Install a Self-signed Certificate

Install the Self-signed Certificate for Windows users with Administrator Rights

The following steps are for Microsoft Internet Explorer. If you use another web browser, consult the documentation for your web browser to get help with installing certificates.

1. Do one of the following:
   - (Windows XP and Windows Server 2003)

     Start your web browser, and then go to step 3.
   - (Windows Vista, Windows 7, Windows Server 2008)

     Click **(Start)** > **All Programs**.
   - (Windows 8)

     Right-click the (**Internet Explorer**) icon on the taskbar.
   - (Windows Server 2012 and Windows Server 2012 R2)

     Click (**Internet Explorer**), and then right-click the (**Internet Explorer**) icon that appears on the taskbar.
2. Right-click **Internet Explorer**, and then click **Run as administrator**.

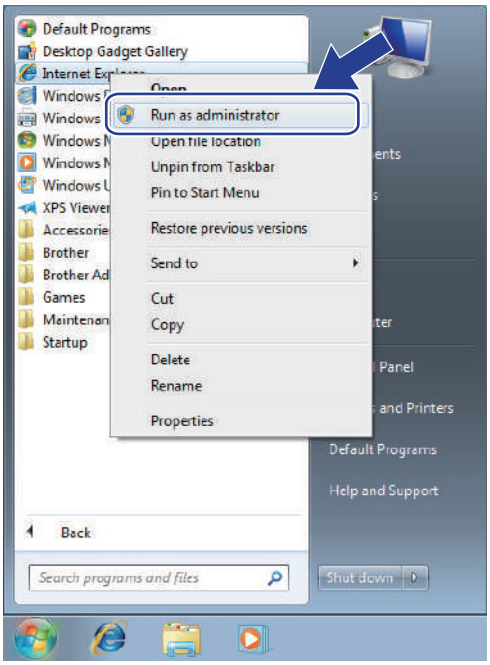

   If the **User Account Control** screen appears,
   - (Windows Vista) Click **Continue (Allow)**.
   - (Windows 7/Windows 8) Click **Yes**.
3. Type "https://machine's IP address/" in your browser's address bar to access your machine (where "machine's IP address" is the machine's IP address or the node name that you assigned for the certificate).

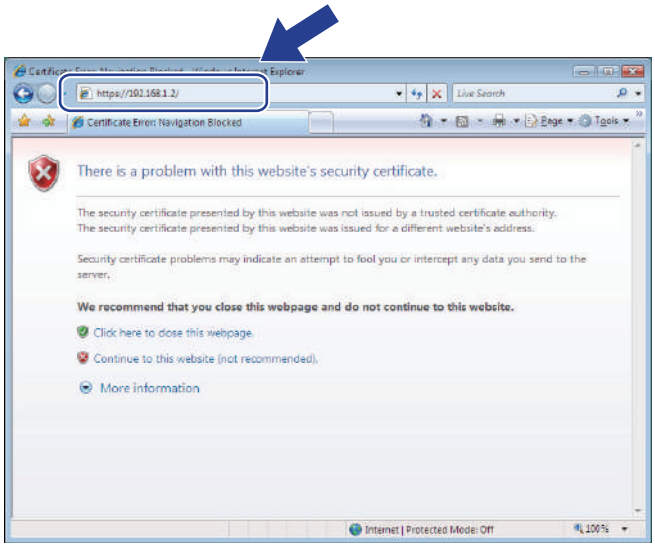

4. Click **Continue to this website (not recommended).**

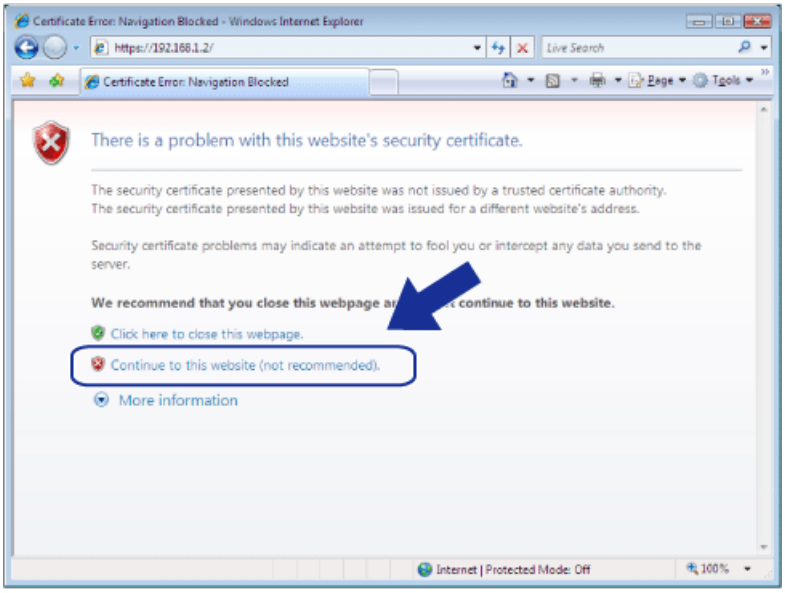

(Windows XP and Windows Server 2003)

When the following dialog box appears, click **View Certificate**, and then go to step 6.

5. Click **Certificate Error**, and then click **View certificates**.

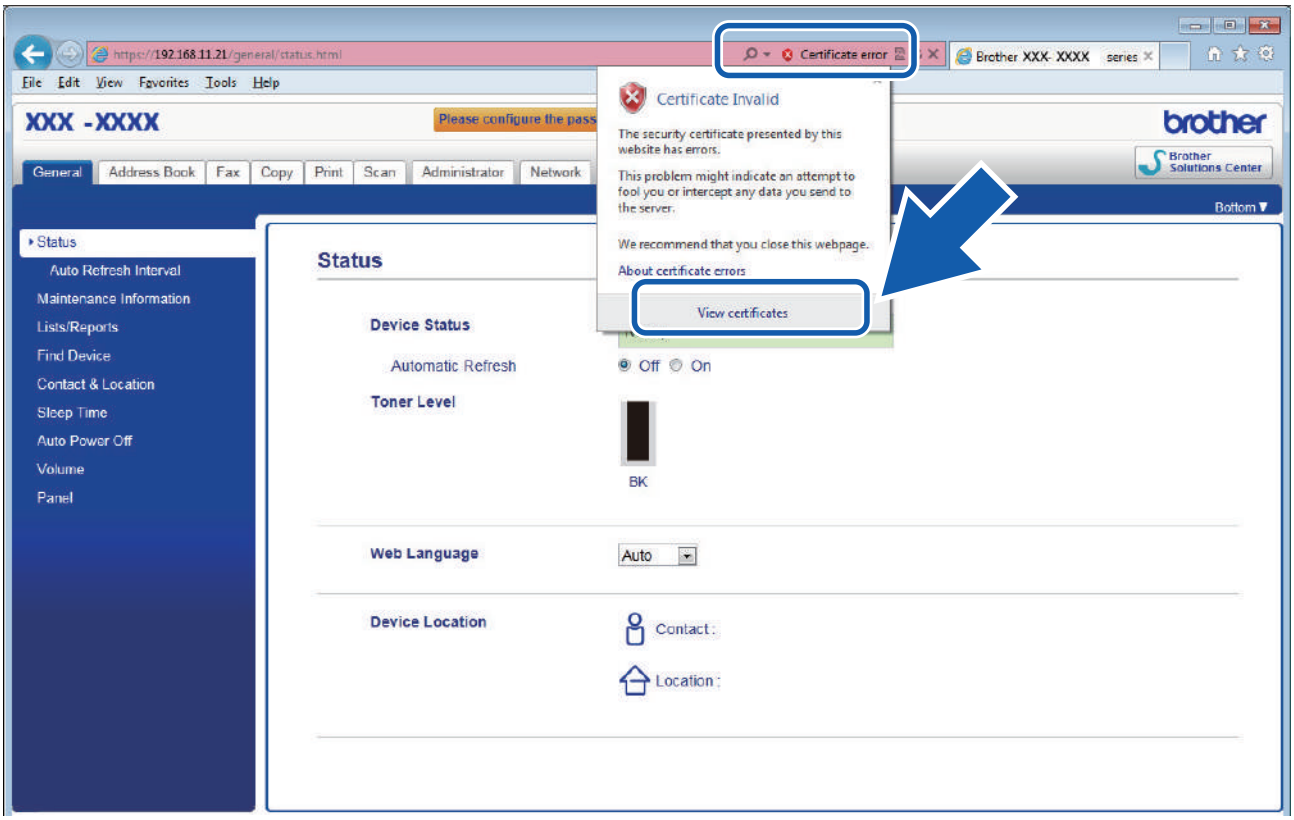

6. Click **Install Certificate...**.

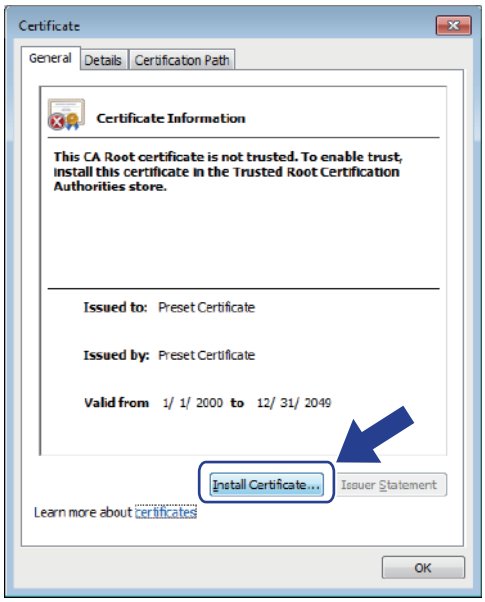

7. When the **Certificate Import Wizard** appears, click **Next**.
8. Select **Place all certificates in the following store**, and then click **Browse...**.

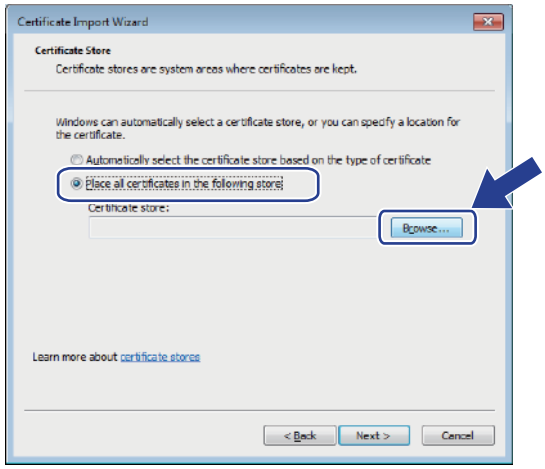

9. Select **Trusted Root Certification Authorities**, and then click **OK**.

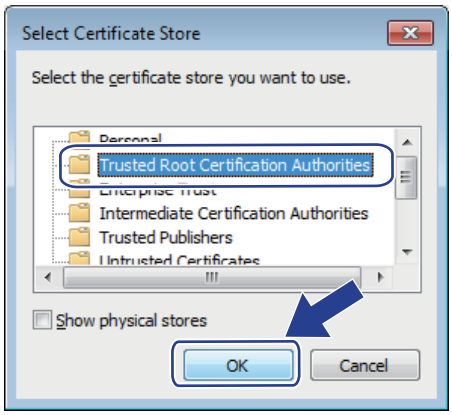

10. Click **Next**.

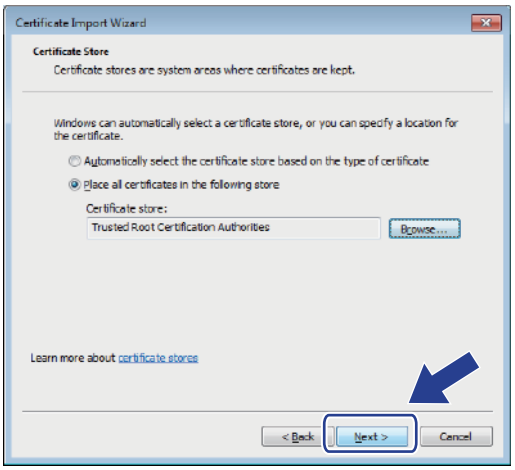

11. Click **Finish**.
12. Click **Yes**, if the fingerprint (thumbprint) is correct.

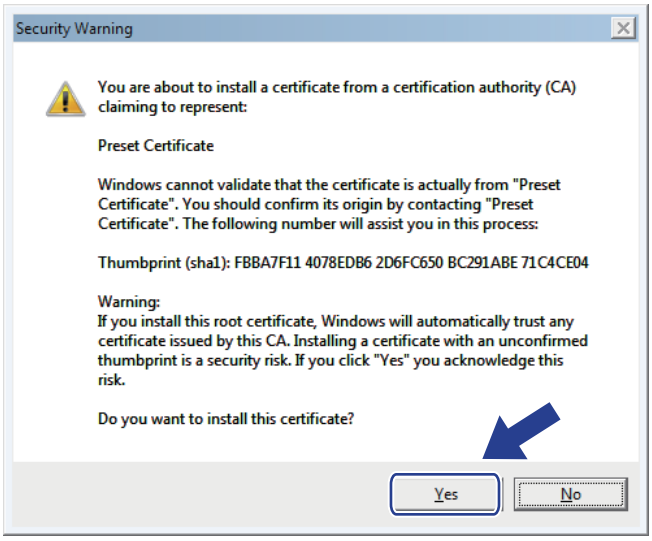

The fingerprint (thumbprint) is printed on the Network Configuration Report.

13. Click **OK**.

The self-signed certificate is now installed on your computer, and SSL/TLS communication is available.

Related Information

- Create and Install a Self-signed Certificate

Import and Export the Self-signed Certificate on your Brother Machine

You can store the self-signed certificates on your Brother machine and manage them by importing and exporting.

- Import the Self-signed Certificate
- Export the Self-signed Certificate

Import the Self-signed Certificate

1. Start your web browser.
2. Type "http://machine's IP address" in your browser's address bar (where "machine's IP address" is the machine's IP address).

   For example:

   http://192.168.1.2

- If you are using a Domain Name System or enable a NetBIOS name, you can type another name, such as "SharedPrinter" instead of the IP address.
  - For example:

    http://SharedPrinter

  If you enable a NetBIOS name, you can also use the node name.
  - For example:

    http://brnxxxxxxxxxxxx

  The NetBIOS name can be found in the Network Configuration Report.
- For Mac, access Web Based Management by clicking the machine's icon on the **Status Monitor** screen.

3. No password is required by default. Type a password if you have set one, and then click .
4. Click the **Network** tab.
5. Click the **Security** tab.
6. Click **Certificate**.
7. Click **Import Certificate and Private Key**.
8. Browse to the file you want to import.
9. Type the password if the file is encrypted, and then click **Submit**.

The self-signed certificate is imported to your machine.

To use SSL/TLS communication, the self-signed certificate must also be installed on your computer. Contact your network administrator.

Related Information

- Import and Export the Self-signed Certificate on your Brother Machine

Export the Self-signed Certificate

1. Start your web browser.
2. Type "http://machine's IP address" in your browser's address bar (where "machine's IP address" is the machine's IP address).

   For example:

   http://192.168.1.2

- If you are using a Domain Name System or enable a NetBIOS name, you can type another name, such as "SharedPrinter" instead of the IP address.
  - For example:

    http://SharedPrinter

  If you enable a NetBIOS name, you can also use the node name.
  - For example:

    http://brnxxxxxxxxxxxx

  The NetBIOS name can be found in the Network Configuration Report.
- For Mac, access Web Based Management by clicking the machine's icon on the **Status Monitor** screen.

3. No password is required by default. Type a password if you have set one, and then click .
4. Click the **Network** tab.
5. Click the **Security** tab.
6. Click **Certificate**.
7. Click **Export** shown with **Certificate List**.
8. If you want to encrypt the file, type a password in the **Enter password** field.

   If the **Enter password** field is blank, your output file will not be encrypted.
9. Type the password again in the **Retype password** field, and then click **Submit**.
10. Click **Save**.
11. Specify the location where you want to save the file.

The self-signed certificate is exported to your computer.

You can also import the self-signed certificate to your computer.

Related Information

- Import and Export the Self-signed Certificate on your Brother Machine

Create and Install a Certificate from a Certificate Authority (CA)

If you already have a certificate from an external trusted CA, you can store the certificate and private key on the machine and manage them by importing and exporting. If you do not have a certificate from an external trusted CA, create a Certificate Signing Request (CSR), send it to a CA for authentication, and install the returned certificate on your machine.

- Create a Certificate Signing Request (CSR)
- Install a Certificate on Your Brother Machine
- Import and Export the Certificate and Private Key

Create a Certificate Signing Request (CSR)

A Certificate Signing Request (CSR) is a request sent to a Certificate Authority (CA) to authenticate the credentials contained within the certificate.

We recommend installing a Root Certificate from the CA on your computer before creating the CSR.

1. Start your web browser.
2. Type "http://machine's IP address" in your browser's address bar (where "machine's IP address" is the machine's IP address).

   For example:

   http://192.168.1.2

   - If you are using a Domain Name System or enable a NetBIOS name, you can type another name, such as "SharedPrinter" instead of the IP address.
     - For example:

       http://SharedPrinter

     If you enable a NetBIOS name, you can also use the node name.
     - For example:

       http://brnxxxxxxxxxxxx

     The NetBIOS name can be found in the Network Configuration Report.
   - For Mac, access Web Based Management by clicking the machine's icon on the **Status Monitor** screen.

3. No password is required by default. Type a password if you have set one, and then click .
4. Click the **Network** tab.
5. Click the **Security** tab.
6. Click **Certificate**.
7. Click **Create CSR**.
8. Type a **Common Name** (required) and add other information about your **Organization** (optional).

   - Your company details are required so that a CA can confirm your identity and verify it to the outside world.
   - The length of the **Common Name** must be less than 64 bytes. Enter an identifier, such as an IP address, node name, or domain name to use when accessing this printer through SSL/TLS communication. The node name is displayed by default. The **Common Name** is required.
   - A warning will appear if you type a different name in the URL than the Common Name that was used for the certificate.
   - The length of the **Organization**, the **Organization Unit**, the **City/Locality** and the **State/Province** must be less than 64 bytes.
   - The **Country/Region** should be a two character ISO 3166 country code.
   - If you are configuring an X.509v3 certificate extension, select the **Configure extended partition** check box, and then select **Auto (Register IPv4)** or **Manual**.

9. Select your setting from the **Public Key Algorithm** drop-down list. The default setting is **RSA(2048bit)**.
10. Select your setting from the **Digest Algorithm** drop-down list. The default setting is **SHA256**.
11. Click **Submit**.

    The CSR appears on your screen. Save the CSR as a file or copy and paste it into an online CSR form offered by a Certificate Authority.

12. Click **Save**.

- Follow your CA's policy regarding the method to send a CSR to your CA.
- If you are using the Enterprise root CA of Windows Server 2003/2008/2012/2012 R2, we recommend using the Web Server for the certificate template to securely create the Client Certificate. If you are creating a Client Certificate for an IEEE 802.1x environment with EAP-TLS authentication, we recommend using User for the certificate template. For more information, go to your model's page on the Brother Solutions Center at support.brother.com.

Related Information

- Create and Install a Certificate from a Certificate Authority (CA)

Install a Certificate on Your Brother Machine

When you receive a certificate from a CA, follow the steps below to install it into the print server:

> Only a certificate issued with your machine's CSR can be installed onto the machine. When you want to create another CSR, make sure that the certificate is installed before creating another CSR. Create another CSR only after installing the certificate on the machine. If you do not, the CSR you create before installing will be invalid.

1. Start your web browser.
2. Type "http://machine's IP address" in your browser's address bar (where "machine's IP address" is the machine's IP address).

   For example:

   http://192.168.1.2

   - If you are using a Domain Name System or enable a NetBIOS name, you can type another name, such as "SharedPrinter" instead of the IP address.
     - For example:

       http://SharedPrinter

     If you enable a NetBIOS name, you can also use the node name.
     - For example:

       http://brnxxxxxxxxxxxx

     The NetBIOS name can be found in the Network Configuration Report.
   - For Mac, access Web Based Management by clicking the machine's icon on the **Status Monitor** screen.

3. No password is required by default. Type a password if you have set one, and then click .
4. Click the **Network** tab.
5. Click the **Security** tab.
6. Click **Certificate**.
7. Click **Install Certificate**.
8. Browse to the file that contains the certificate issued by the CA, and then click **Submit**.

   The certificate has been created successfully and saved in your machine's memory successfully.

To use SSL/TLS communication, the Root Certificate from the CA must be installed on your computer. Contact your network administrator.

Related Information

- Create and Install a Certificate from a Certificate Authority (CA)

Import and Export the Certificate and Private Key

Store the certificate and private key on your machine and manage them by importing and exporting them.

- Import a Certificate and Private Key
- Export the Certificate and Private Key

Import a Certificate and Private Key

1. Start your web browser.
2. Type "http://machine's IP address" in your browser's address bar (where "machine's IP address" is the machine's IP address).

   For example:

   http://192.168.1.2

- If you are using a Domain Name System or enable a NetBIOS name, you can type another name, such as "SharedPrinter" instead of the IP address.
  - For example:

    http://SharedPrinter

  If you enable a NetBIOS name, you can also use the node name.
  - For example:

    http://brnxxxxxxxxxxxx

  The NetBIOS name can be found in the Network Configuration Report.
- For Mac, access Web Based Management by clicking the machine's icon on the **Status Monitor** screen.

3. No password is required by default. Type a password if you have set one, and then click .
4. Click the **Network** tab.
5. Click the **Security** tab.
6. Click **Certificate**.
7. Click **Import Certificate and Private Key**.
8. Browse to the file you want to import.
9. Type the password if the file is encrypted, and then click **Submit**.

The certificate and private key are imported to your machine.

To use SSL/TLS communication, the Root Certificate from the CA must also be installed on your computer. Contact your network administrator.

Related Information

- Import and Export the Certificate and Private Key

Export the Certificate and Private Key

1. Start your web browser.
2. Type "http://machine's IP address" in your browser's address bar (where "machine's IP address" is the machine's IP address).

   For example:

   http://192.168.1.2

- If you are using a Domain Name System or enable a NetBIOS name, you can type another name, such as "SharedPrinter" instead of the IP address.
  - For example:

    http://SharedPrinter

  If you enable a NetBIOS name, you can also use the node name.
  - For example:

    http://brnxxxxxxxxxxxx

  The NetBIOS name can be found in the Network Configuration Report.
- For Mac, access Web Based Management by clicking the machine's icon on the **Status Monitor** screen.

3. No password is required by default. Type a password if you have set one, and then click .
4. Click the **Network** tab.
5. Click the **Security** tab.
6. Click **Certificate**.
7. Click **Export** shown with **Certificate List**.
8. Enter the password if you want to encrypt the file.

   If a blank password is used, the output is not encrypted.
9. Enter the password again for confirmation, and then click **Submit**.
10. Click **Save**.
11. Specify the location where you want to save the file.

The certificate and private key are exported to your computer.

You can also import the certificate to your computer.

Related Information

- Import and Export the Certificate and Private Key

Import and Export a CA Certificate

You can import, export and store CA certificates on your Brother machine.

- Import a CA Certificate
- Export a CA Certificate

Import a CA Certificate

1. Start your web browser.
2. Type "http://machine's IP address" in your browser's address bar (where "machine's IP address" is the machine's IP address).

   For example:

   http://192.168.1.2

   - If you are using a Domain Name System or enable a NetBIOS name, you can type another name, such as "SharedPrinter" instead of the IP address.
     - For example:

       http://SharedPrinter

     If you enable a NetBIOS name, you can also use the node name.
     - For example:

       http://brnxxxxxxxxxxxx

     The NetBIOS name can be found in the Network Configuration Report.
   - For Mac, access Web Based Management by clicking the machine's icon on the **Status Monitor** screen.
3. No password is required by default. Type a password if you have set one, and then click .
4. Click the **Network** tab.
5. Click the **Security** tab.
6. Click **CA Certificate**.
7. Click **Import CA Certificate**.
8. Browse to the file you want to import.
9. Click **Submit**.

Related Information

- Import and Export a CA Certificate

Export a CA Certificate

1. Start your web browser.
2. Type "http://machine's IP address" in your browser's address bar (where "machine's IP address" is the machine's IP address).

   For example:

   http://192.168.1.2

   - If you are using a Domain Name System or enable a NetBIOS name, you can type another name, such as "SharedPrinter" instead of the IP address.
     - For example:

       http://SharedPrinter

     If you enable a NetBIOS name, you can also use the node name.
     - For example:

       http://brnxxxxxxxxxxxx

     The NetBIOS name can be found in the Network Configuration Report.
   - For Mac, access Web Based Management by clicking the machine's icon on the **Status Monitor** screen.
3. No password is required by default. Type a password if you have set one, and then click .
4. Click the **Network** tab.
5. Click the **Security** tab.
6. Click **CA Certificate**.
7. Select the certificate you want to export and click **Export**.
8. Click **Submit**.
9. Click **Save**.
10. Specify where on your computer you want to save the exported certificate, and save it.

Related Information

- Import and Export a CA Certificate

Manage Multiple Certificates

The multiple certificate feature allows you to use Web Based Management to manage each certificate installed on your machine. In Web Based Management, navigate to the **Certificate** or **CA Certificate** screen to view certificate content, delete, or export your certificates.

	Maximum Number of Certificates Stored UP on Brother Machine
Self-signed Certificate or Certificate Issued by a CA	6
CA Certificate	9

We recommend storing one less certificate than allowed, reserving an empty spot in case of certificate expiration. When a certificate expires, import a new certificate into the reserved spot, and then delete the expired certificate. This ensures that you avoid configuration failure.

- When you use HTTPS/IPPS, IEEE 802.1x, or Signed PDF, you must select which certificate you are using.
- When you use SSL for SMTP/POP3/IMAP4 communications (only available for certain models), you do not have to choose the certificate. The necessary certificate will be chosen automatically.

Related Information

- Certificates and Web Based Management

Manage Your Network Machine Securely Using Web Based Management

To manage your network machine securely, you must use management utilities with security protocols.

We recommend using the HTTPS protocol for secure management. To use this protocol, HTTPS must be enabled on your machine.

- The HTTPS protocol is enabled by default.
- You can change the HTTPS protocol settings using the Web Based Management screen.
  1. Click the **Network** tab.
  2. Click the **Protocol** menu in the left navigation bar.
  3. Click **HTTP Server Settings**.

1. Start your web browser.
2. Type "https://Common Name" in your browser's address bar (where "Common Name" is the Common Name that you assigned to the certificate; this could be your IP address, node name, or domain name).
3. No password is required by default. Type a password if you have set one, and then click .
4. You can now access the machine using HTTPS.

- If you use the SNMPv3 protocol, follow the steps below.
- You can also change the SNMP settings by using BRAdmin Professional.

5. Click the **Network** tab.
6. Click **Protocol**.
7. Make sure the **SNMP** setting is enabled, and then click **Advanced Settings**.
8. Configure the SNMP settings.

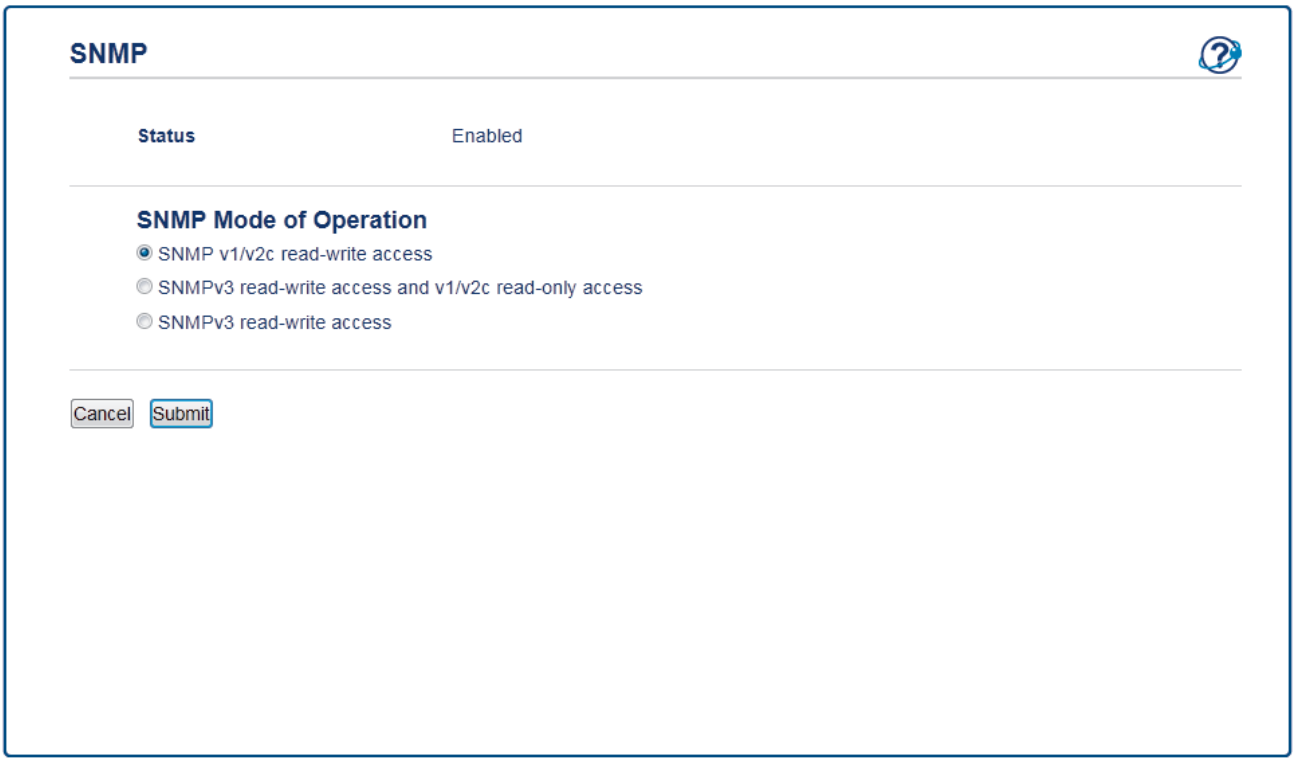

There are three options for **SNMP Mode of Operation**.

- **SNMP v1/v2c read-write access**

In this mode, the print server uses version 1 and version 2c of the SNMP protocol. You can use all Brother applications in this mode. However, it is not secure since it will not authenticate the user, and data will not be encrypted.

- **SNMPv3 read-write access and v1/v2c read-only access**

  In this mode, the print server uses the read-write access of version 3 and the read-only access of version 1 and version 2c of the SNMP protocol.

When you use **SNMPv3 read-write access and v1/v2c read-only access** mode, some Brother applications (such as BRAdmin Light) that access the print server do not work correctly since they authorize the read-only access of version 1 and version 2c. If you want to use all applications, we recommend using **SNMP v1/v2c read-write access** mode.

- **SNMPv3 read-write access**

  In this mode, the print sever uses version 3 of the SNMP protocol. If you want to manage the print server securely, use this mode.

When you use **SNMPv3 read-write access** mode, note the following:

- You can use only BRAdmin Professional or Web Based Management to manage the print server.
- Except for BRAdmin Professional, all applications that use SNMPv1/v2c will be restricted. To allow the use of SNMPv1/v2c applications, use **SNMPv3 read-write access and v1/v2c read-only access** or **SNMP v1/v2c read-write access** mode.

Related Information

- Manage Your Network Machine Securely Using SSL/TLS

Manage Your Network Machine Securely Using BRAdmin Professional (Windows)

To use BRAdmin Professional utility, you must:

- Use the latest version of BRAdmin Professional. Go to your model's **Downloads** page on the Brother Solutions Center at support.brother.com. If you use an older version of BRAdmin to manage your Brother machines, the user authentication will not be secure.
- Use Web Based Management with the HTTPS protocol if you use BRAdmin Professional and Web Based Management together.
- Use a different password in each group if you are managing a mixed group of older and newer print servers with BRAdmin Professional. This will ensure security is maintained on the newer print servers.

- "Older versions of BRAdmin" refer to BRAdmin Professional older than Ver. 2.80 and BRAdmin Light for Mac older than Ver.1.10.
- "Older print servers" refer to NC-2000 series, NC-2100p, NC-3100h, NC-3100s, NC-4100h, NC-5100h, NC-5200h, NC-6100h, NC-6200h, NC-6300h, NC-6400h, NC-8000, NC-100h, NC-110h, NC-120w, NC-130h, NC-140w, NC-8100h, NC-9100h, NC-7100w, NC-7200w and NC-2200w.

Related Information

- Manage Your Network Machine Securely Using SSL/TLS

Print Documents Securely Using SSL/TLS

To print documents securely with IPP protocol, use the IPPS protocol.

1. Start your web browser.
2. Type "http://machine's IP address" in your browser's address bar (where "machine's IP address" is the machine's IP address).

   For example:

   http://192.168.1.2

- If you are using a Domain Name System or enable a NetBIOS name, you can type another name, such as "SharedPrinter" instead of the IP address.
  - For example:

    http://SharedPrinter

  If you enable a NetBIOS name, you can also use the node name.
  - For example:

    http://brnxxxxxxxxxxxx

  The NetBIOS name can be found in the Network Configuration Report.
- For Mac, access Web Based Management by clicking the machine's icon on the **Status Monitor** screen.

3. No password is required by default. Type a password if you have set one, and then click .
4. Click the **Network** tab.
5. Click **Protocol**. Make sure the **IPP** check box is selected.

If the **IPP** check box is not selected, select the **IPP** check box, and then click **Submit**.

Restart your machine to activate the configuration.

After the machine restarts, return to the machine's web page, click the **Network** tab, and then click **Protocol**.

6. Click **HTTP Server Settings**.
7. Select the **HTTPS(Port443)** check box in the **IPP**, and then click **Submit**.
8. Restart your machine to activate the configuration.

Communication using IPPS cannot prevent unauthorised access to the print server.

Related Information

- Manage Your Network Machine Securely Using SSL/TLS

Manage Your Network Machine Securely Using IPsec

- Introduction to IPsec
- Configure IPsec Using Web Based Management
- Configure an IPsec Address Template Using Web Based Management
- Configure an IPsec Template Using Web Based Management

Introduction to IPsec

IPsec (Internet Protocol Security) is a security protocol that uses an optional Internet Protocol function to prevent manipulation and ensure the confidentiality of data transmitted as IP packets. IPsec encrypts data carried over the network, such as print data sent from computers to a printer. Because the data is encrypted at the network layer, applications that employ a higher-level protocol use IPsec even if the user is not aware of its use.

IPsec supports the following functions:

- IPsec transmissions

  According to the IPsec setting conditions, the network-connected computer sends data to and receives data from the specified device using IPsec. When the devices start communicating using IPsec, keys are exchanged using Internet Key Exchange (IKE) first, and then the encrypted data is transmitted using the keys.

  In addition, IPsec has two operation modes: the Transport mode and Tunnel mode. The Transport mode is used mainly for communication between devices and the Tunnel mode is used in environments such as a Virtual Private Network (VPN).

  For IPsec transmissions, the following conditions are necessary:

  - A computer that can communicate using IPsec is connected to the network.
  - Your Brother machine is configured for IPsec communication.
  - The computer connected to your Brother machine is configured for IPsec connections.

- IPsec settings

  The settings that are necessary for connections using IPsec. These settings can be configured using Web Based Management.

  To configure the IPsec settings, you must use the browser on a computer that is connected to the network.

Related Information

- Manage Your Network Machine Securely Using IPsec

Configure IPsec Using Web Based Management

The IPsec connection conditions are comprised of two **Template** types: **Address** and **IPsec**. You can configure up to 10 connection conditions.

1. Start your web browser.
2. Type "http://machine's IP address" in your browser's address bar (where "machine's IP address" is the machine's IP address).

   For example:

   http://192.168.1.2
3. No password is required by default. Type a password if you have set one, and then click .
4. Click the **Network** tab.
5. Click the **Security** tab.
6. Click the **IPsec** menu in the left navigation bar.

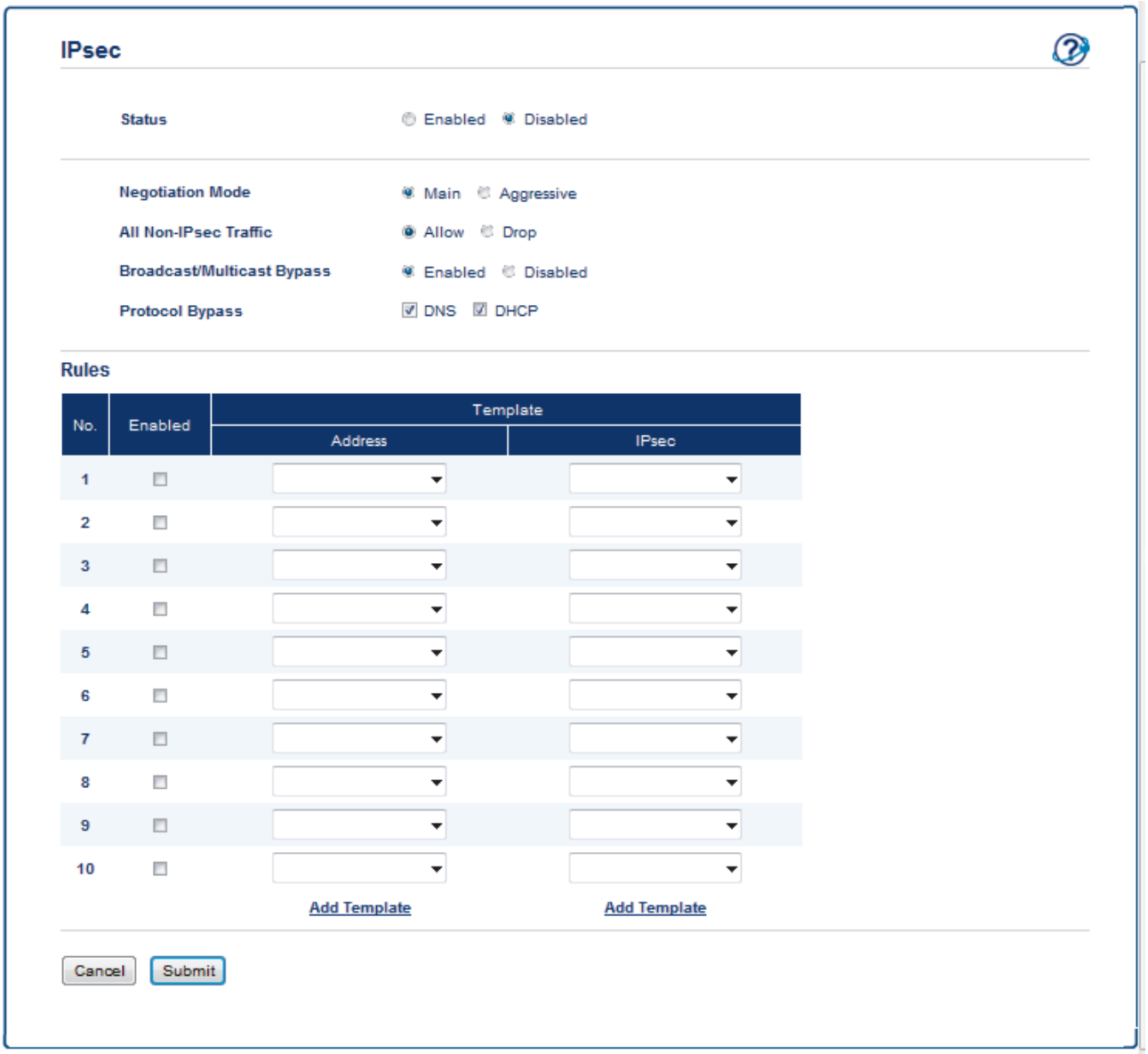

7. In the **Status** field, enable or disable IPsec.
8. Select **Negotiation Mode** for IKE Phase 1.

   IKE is a protocol that is used to exchange encryption keys in order to carry out encrypted communication using IPsec.

In **Main** mode, the processing speed is slow, but the security is high. In **Aggressive** mode, the processing speed is faster than **Main** mode, but the security is lower.

9. In the **All Non-IPsec Traffic** field, select the action to be taken for non-IPsec packets.

   When using Web Services, you must select **Allow** for **All Non-IPsec Traffic**. If you select **Drop**, Web Services cannot be used.

10. In the **Broadcast/Multicast Bypass** field, select **Enabled** or **Disabled**.
11. In the **Protocol Bypass** field, select the check box for the option or options you want.
12. In the **Rules** table, select the **Enabled** check box to activate the template.

    When you select multiple check boxes, the lower numbered check boxes have priority if the settings for the selected check boxes conflict.

13. Click on the corresponding drop-down list to select the **Address Template** that is used for the IPsec connection conditions.

    To add an **Address Template**, click **Add Template**.

14. Click on the corresponding drop-down list to select the **IPsec Template** that is used for the IPsec connection conditions.

    To add an **IPsec Template**, click **Add Template**.

15. Click **Submit**.

    If the machine must be restarted to register the new settings, the restart confirmation screen will appear.

    If there is a blank item in the template you enabled in the **Rules** table, an error message appears. Confirm your choices and submit again.

Related Information

- Manage Your Network Machine Securely Using IPsec

Configure an IPsec Address Template Using Web Based Management

1. Start your web browser.
2. Type "http://machine's IP address" in your browser's address bar (where "machine's IP address" is the machine's IP address).

   For example:

   http://192.168.1.2
3. No password is required by default. Type a password if you have set one, and then click .
4. Click the **Network** tab.
5. Click the **Security** tab.
6. Click the **IPsec Address Template** menu in the left navigation bar.

   The Template List appears, displaying 10 Address Templates.

   Click the **Delete** button to delete an **Address Template**. When an **Address Template** is in use, it cannot be deleted.
7. Click the **Address Template** that you want to create. The **IPsec Address Template** appears.

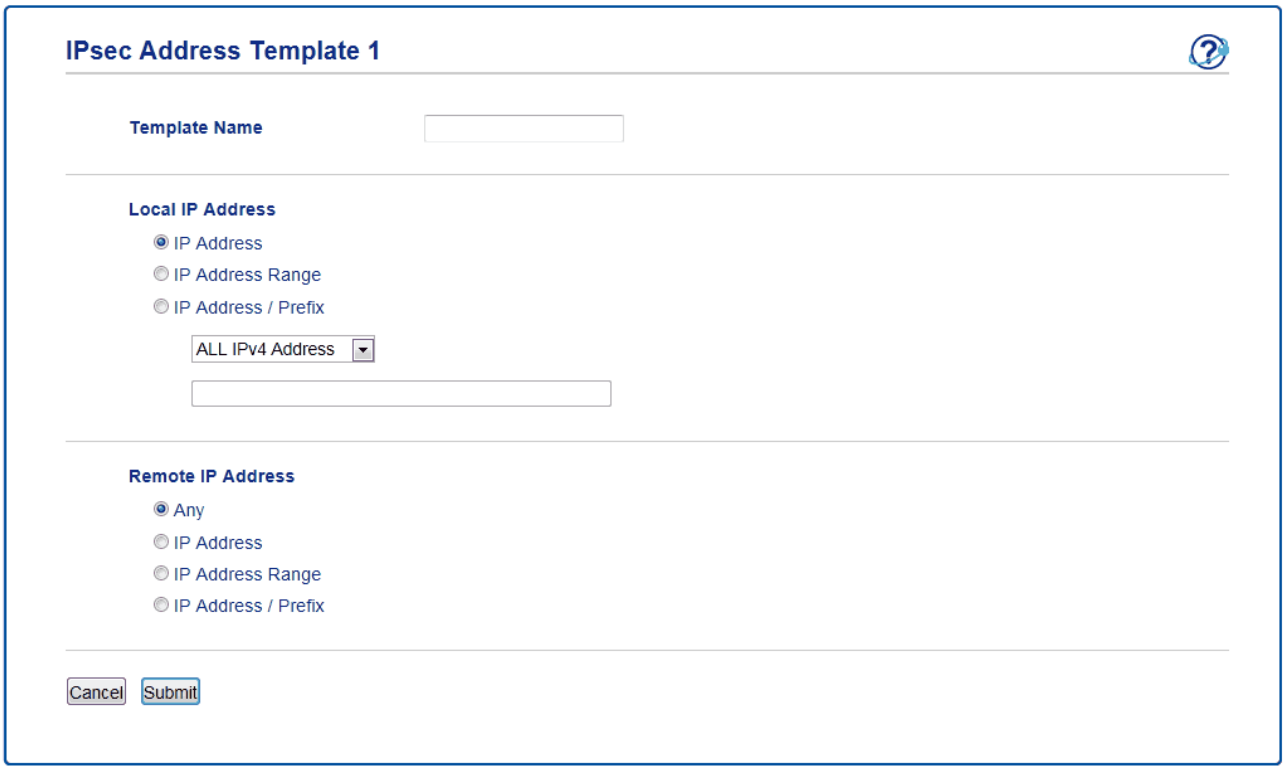

8. In the **Template Name** field, type a name for the template (up to 16 characters).
9. Select a **Local IP Address** option to specify the IP address conditions for the sender:
   - **IP Address**

     Specify the IP address. Select **ALL IPv4 Address**, **ALL IPv6 Address**, **ALL Link Local IPv6**, or **Custom** from the drop-down list.

     If you select **Custom** from the drop-down list, type the IP address (IPv4 or IPv6) in the text box.
   - **IP Address Range**

     Type the starting and ending IP addresses for the IP address range in the text boxes. If the starting and ending IP addresses are not standardized to IPv4 or IPv6, or the ending IP address is smaller than the starting address, an error will occur.
   - **IP Address / Prefix**

     Specify the IP address using CIDR notation.

For example: 192.168.1.1/24

Because the prefix is specified in the form of a 24-bit subnet mask (255.255.255.0) for 192.168.1.1, the addresses 192.168.1.xxx are valid.

10. Select a **Remote IP Address** option to specify the IP address conditions for the recipient:
    - **Any**

      If you select **Any**, all IP addresses are enabled.
    - **IP Address**

      Type the specified IP address (IPv4 or IPv6) in the text box.
    - **IP Address Range**

      Type the starting and ending IP addresses for the IP address range. If the starting and ending IP addresses are not standardized to IPv4 or IPv6, or the ending IP address is smaller than the starting address, an error will occur.
    - **IP Address / Prefix**

      Specify the IP address using CIDR notation.

      For example: 192.168.1.1/24

      Because the prefix is specified in the form of a 24-bit subnet mask (255.255.255.0) for 192.168.1.1, the addresses 192.168.1.xxx are valid.
11. Click **Submit**.

When you change the settings for the template currently in use, restart your machine to active the configuration.

Related Information

- Manage Your Network Machine Securely Using IPsec

Configure an IPsec Template Using Web Based Management

1. Start your web browser.
2. Type "http://machine's IP address" in your browser's address bar (where "machine's IP address" is the machine's IP address).

   For example:

   http://192.168.1.2
3. No password is required by default. Type a password if you have set one, and then click .
4. Click the **Network** tab.
5. Click the **Security** tab.
6. Click **IPsec Template** in the left navigation bar.

   The Template List appears, displaying 10 IPsec Templates.

   Click the **Delete** button to delete an **IPsec Template**. When an **IPsec Template** is in use, it cannot be deleted.
7. Click **IPsec Template** that you want to create. The **IPsec Template** screen appears. The configuration fields differ based on the **Use Prefixed Template** and **Internet Key Exchange (IKE)** you select.
8. In the **Template Name** field, type a name for the template (up to 16 characters).
9. If you selected **Custom** in the **Use Prefixed Template** drop-down list, select the **Internet Key Exchange (IKE)** options, and then change the settings if needed.
10. Click **Submit**.

IPsec Template 1

Template Name	
Use Prefixed Template	IKEv1 High Security
Internet Key Exchange (IKE)	IKEv1
Authentication Type	
Diffie-Hellman Group	Group5 Group14
Encryption	AES-CBC 128 AES-CBC 256
Hash	SHA1 SHA256 SHA512
SA Lifetime	28800 second(s) (240 – 63072000) 32768 KByte (10 – 2097152)
Encapsulating Security	
Protocol	ESP
Encryption	AES-CBC 128 AES-CBC 256
Hash	SHA1 SHA256 SHA512
SA Lifetime	3600 second(s) (240 – 63072000) 65536 KByte (10 – 2097152)
Encapsulation Mode	Transport Tunnel
Remote Router IP-Address	
Perfect Forward Secrecy (PFS)	Enabled Disabled
Authentication Method	Pre-Shared Key Certificates
Pre-Shared Key	
Local	
ID Type	IPv4 Address
ID	
Remote	
ID Type	IPv4 Address
ID	
Certificate>>	

Cancel Submit

Related Information

- Manage Your Network Machine Securely Using IPsec
- IKEv1 Settings for an IPsec Template
- IKEv2 Settings for an IPsec Template
- Manual Settings for an IPsec Template

IKEv1 Settings for an IPsec Template

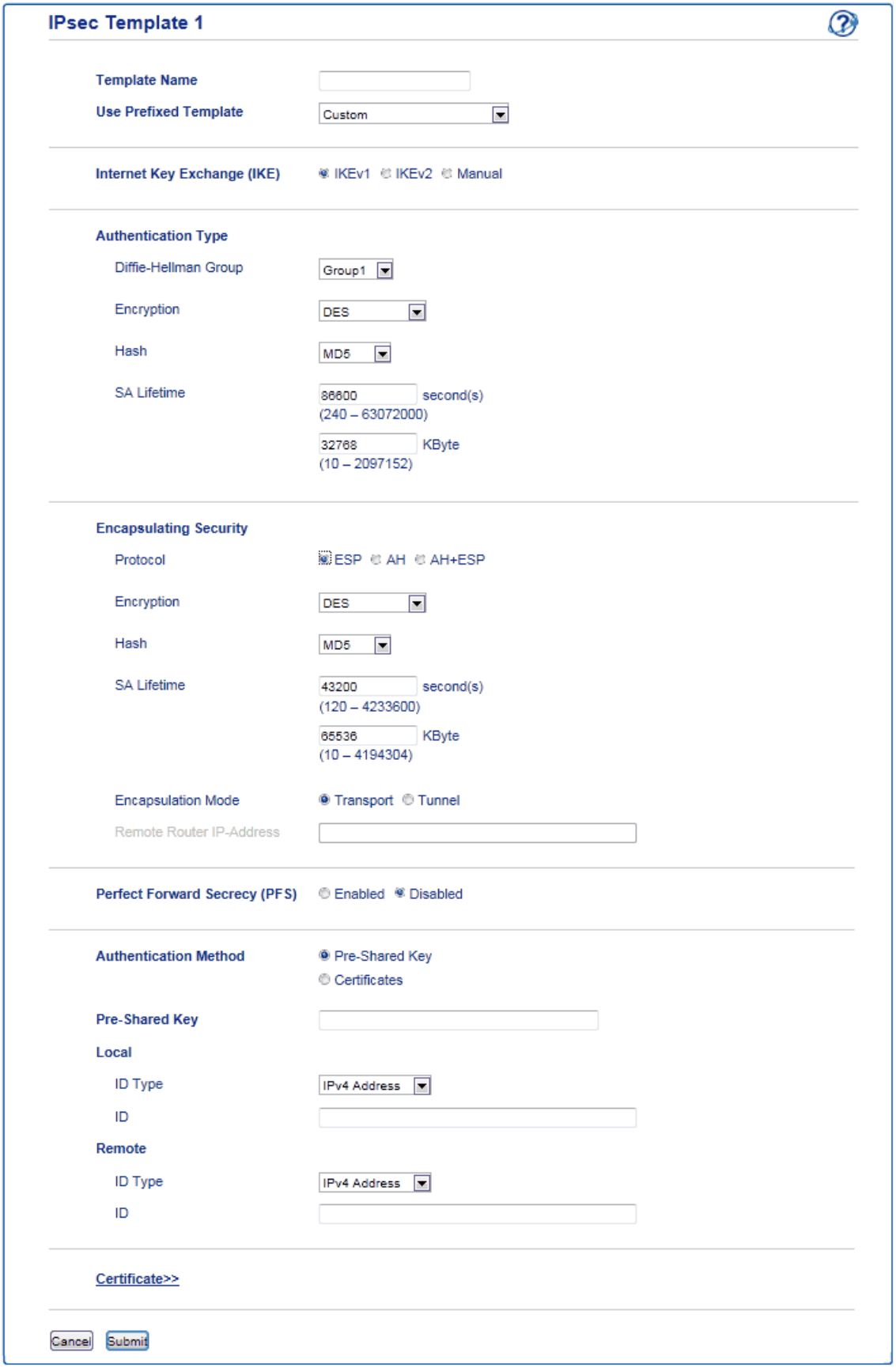

Template Name

Type a name for the template (up to 16 characters).

Use Prefixed Template

Select **Custom**, **IKEv1 High Security** or **IKEv1 Medium Security**. The setting items are different depending on the selected template.

The default template differs depending on whether you chose **Main** or **Aggressive** for **Negotiation Mode** on the **IPsec** configuration screen.

Internet Key Exchange (IKE)

IKE is a communication protocol that is used to exchange encryption keys in order to carry out encrypted communication using IPsec. To carry out encrypted communication for that time only, the encryption algorithm that is necessary for IPsec is determined and the encryption keys are shared. For IKE, the encryption keys are exchanged using the Diffie-Hellman key exchange method, and encrypted communication that is limited to IKE is carried out.

If you selected **Custom** in **Use Prefixed Template**, select **IKEv1**.

Authentication Type

Configure the IKE authentication and encryption.

- **Diffie-Hellman Group**

  This key exchange method allows secret keys to be securely exchanged over an unprotected network. The Diffie-Hellman key exchange method uses a discrete logarithm problem, not the secret key, to send and receive open information that was generated using a random number and the secret key.

  Select **Group1**, **Group2**, **Group5**, or **Group14**.

- **Encryption**

  Select **DES**, **3DES**, **AES-CBC 128**, or **AES-CBC 256**.

- **Hash**

  Select **MD5**, **SHA1**, **SHA256**, **SHA384** or **SHA512**.

- **SA Lifetime**

  Specify the IKE SA lifetime.

  Type the time (seconds) and number of kilobytes (KByte).

Encapsulating Security

- **Protocol**

  Select **ESP**, **AH** or **AH+ESP**.

- ESP is a protocol for carrying out encrypted communication using IPsec. ESP encrypts the payload (communicated contents) and adds additional information. The IP packet is comprised of the header and the encrypted payload, which follows the header. In addition to the encrypted data, the IP packet also includes information regarding the encryption method and encryption key, the authentication data, and so on.
- AH is part of the IPsec protocol that authenticates the sender and prevents manipulation (ensures the completeness) of the data. In the IP packet, the data is inserted immediately after the header. In addition, the packets include hash values, which are calculated using an equation from the communicated contents, secret key, and so on, in order to prevent the falsification of the sender and manipulation of the data. Unlike ESP, the communicated contents are not encrypted, and the data is sent and received as plain text.

- **Encryption**

  Select **DES**, **3DES**, **AES-CBC 128**, or **AES-CBC 256**. The encryption can be selected only when **ESP** is selected in **Protocol**.

- **Hash**

  Select **None**, **MD5**, **SHA1**, **SHA256**, **SHA384**, or **SHA512**.

  When **AH+ESP** is selected in **Protocol**, select each protocol for **Hash(ESP)** and **Hash(AH)**.

- **SA Lifetime**

  Specify the IPsec SA lifetime.

Type the time (seconds) and number of kilobytes (KByte) before the IPsec SA will expire.

- **Encapsulation Mode**

  Select **Transport** or **Tunnel**.

- **Remote Router IP-Address**

  Type the IP address (IPv4 or IPv6) of the remote router. Enter this information only when the **Tunnel** mode is selected.

SA (Security Association) is an encrypted communication method using IPsec or IPv6 that exchanges and shares information, such as the encryption method and encryption key, in order to establish a secure communication channel before communication begins. SA may also refer to a virtual encrypted communication channel that has been established. The SA used for IPsec establishes the encryption method, exchanges the keys, and carries out mutual authentication according to the IKE (Internet Key Exchange) standard procedure. In addition, the SA is updated periodically.

Perfect Forward Secrecy (PFS)

PFS does not derive keys from previous keys that were used to encrypt messages. In addition, if a key that is used to encrypt a message was derived from a parent key, that parent key is not used to derive other keys. Therefore, even if a key is compromised, the damage will be limited only to the messages that were encrypted using that key.

Select **Enabled** or **Disabled**.

Authentication Method

Select the authentication method. Select **Pre-Shared Key** or **Certificates**.

Pre-Shared Key

When encrypting communication, the encryption key is exchanged and shared beforehand using another channel.

If you selected **Pre-Shared Key** for the **Authentication Method**, type the **Pre-Shared Key** (up to 32 characters).

- **Local/ID Type/ID**

  Select the sender's ID type, and then type the ID.

  Select **IPv4 Address**, **IPv6 Address**, **FQDN**, **E-mail Address**, or **Certificate** for the type.

  If you select **Certificate**, type the common name of the certificate in the **ID** field.

- **Remote/ID Type/ID**

  Select the recipient's ID type, and then type the ID.

  Select **IPv4 Address**, **IPv6 Address**, **FQDN**, **E-mail Address**, or **Certificate** for the type.

  If you select **Certificate**, type the common name of the certificate in the **ID** field.

Certificate

If you selected **Certificates** for **Authentication Method**, select the certificate.

You can select only the certificates that were created using the **Certificate** page of Web Based Management's Security configuration screen.

Related Information

- Configure an IPsec Template Using Web Based Management

IKEv2 Settings for an IPsec Template

Template Name

Type a name for the template (up to 16 characters).

Use Prefixed Template

Select **Custom**, **IKEv2 High Security**, or **IKEv2 Medium Security**. The setting items are different depending on the selected template.

Internet Key Exchange (IKE)

IKE is a communication protocol that is used to exchange encryption keys in order to carry out encrypted communication using IPsec. To carry out encrypted communication for that time only, the encryption algorithm that is necessary for IPsec is determined and the encryption keys are shared. For IKE, the encryption keys are exchanged using the Diffie-Hellman key exchange method, and encrypted communication that is limited to IKE is carried out.

If you selected **Custom** in **Use Prefixed Template**, select **IKEv2**.

Authentication Type

Configure the IKE authentication and encryption.

- **Diffie-Hellman Group**

  This key exchange method allows secret keys to be securely exchanged over an unprotected network. The Diffie-Hellman key exchange method uses a discrete logarithm problem, not the secret key, to send and receive open information that was generated using a random number and the secret key.

  Select **Group1**, **Group2**, **Group5**, or **Group14**.
- **Encryption**

  Select **DES**, **3DES**, **AES-CBC 128**, or **AES-CBC 256**.
- **Hash**

  Select **MD5**, **SHA1**, **SHA256**, **SHA384** or **SHA512**.
- **SA Lifetime**

  Specify the IKE SA lifetime.

  Type the time (seconds) and number of kilobytes (KByte).

Encapsulating Security

- **Protocol**

  Select **ESP**.

ESP is a protocol for carrying out encrypted communication using IPsec. ESP encrypts the payload (communicated contents) and adds additional information. The IP packet is comprised of the header and the encrypted payload, which follows the header. In addition to the encrypted data, the IP packet also includes information regarding the encryption method and encryption key, the authentication data, and so on.

- **Encryption**

  Select **DES**, **3DES**, **AES-CBC 128**, or **AES-CBC 256**.
- **Hash**

  Select **MD5**, **SHA1**, **SHA256**, **SHA384**, or **SHA512**.
- **SA Lifetime**

  Specify the IPsec SA lifetime.

  Type the time (seconds) and number of kilobytes (KByte) before the IPsec SA will expire.
- **Encapsulation Mode**

  Select **Transport** or **Tunnel**.
- **Remote Router IP-Address**

  Type the IP address (IPv4 or IPv6) of the remote router. Enter this information only when the **Tunnel** mode is selected.

SA (Security Association) is an encrypted communication method using IPsec or IPv6 that exchanges and shares information, such as the encryption method and encryption key, in order to establish a secure communication channel before communication begins. SA may also refer to a virtual encrypted communication channel that has been established. The SA used for IPsec establishes the encryption method, exchanges the keys, and carries out mutual authentication according to the IKE (Internet Key Exchange) standard procedure. In addition, the SA is updated periodically.

Perfect Forward Secrecy (PFS)

PFS does not derive keys from previous keys that were used to encrypt messages. In addition, if a key that is used to encrypt a message was derived from a parent key, that parent key is not used to derive other keys. Therefore, even if a key is compromised, the damage will be limited only to the messages that were encrypted using that key.

Select **Enabled** or **Disabled**.

Authentication Method

Select the authentication method. Select **Pre-Shared Key**, **Certificates**, **EAP - MD5**, or **EAP - MS-CHAPv2**.

Pre-Shared Key

When encrypting communication, the encryption key is exchanged and shared beforehand using another channel.

If you selected **Pre-Shared Key** for the **Authentication Method**, type the **Pre-Shared Key** (up to 32 characters).

- **Local/ID Type/ID**

  Select the sender's ID type, and then type the ID.

  Select **IPv4 Address**, **IPv6 Address**, **FQDN**, **E-mail Address**, or **Certificate** for the type.

  If you select **Certificate**, type the common name of the certificate in the **ID** field.
- **Remote/ID Type/ID**

  Select the recipient's ID type, and then type the ID.

  Select **IPv4 Address**, **IPv6 Address**, **FQDN**, **E-mail Address**, or **Certificate** for the type.

  If you select **Certificate**, type the common name of the certificate in the **ID** field.

Certificate

If you selected **Certificates** for **Authentication Method**, select the certificate.

You can select only the certificates that were created using the **Certificate** page of Web Based Management's Security configuration screen.

EAP

EAP is an authentication protocol that is an extension of PPP. By using EAP with IEEE802.1x, a different key is used for user authentication during each session.

The following settings are necessary only when **EAP - MD5** or **EAP - MS-CHAPv2** is selected in **Authentication Method**:

- **Mode**

  Select **Server-Mode** or **Client-Mode**.
- **Certificate**

  Select the certificate.
- **User Name**

  Type the user name (up to 32 characters).
- **Password**

  Type the password (up to 32 characters). The password must be entered two times for confirmation.

Related Information

- Configure an IPsec Template Using Web Based Management

Manual Settings for an IPsec Template

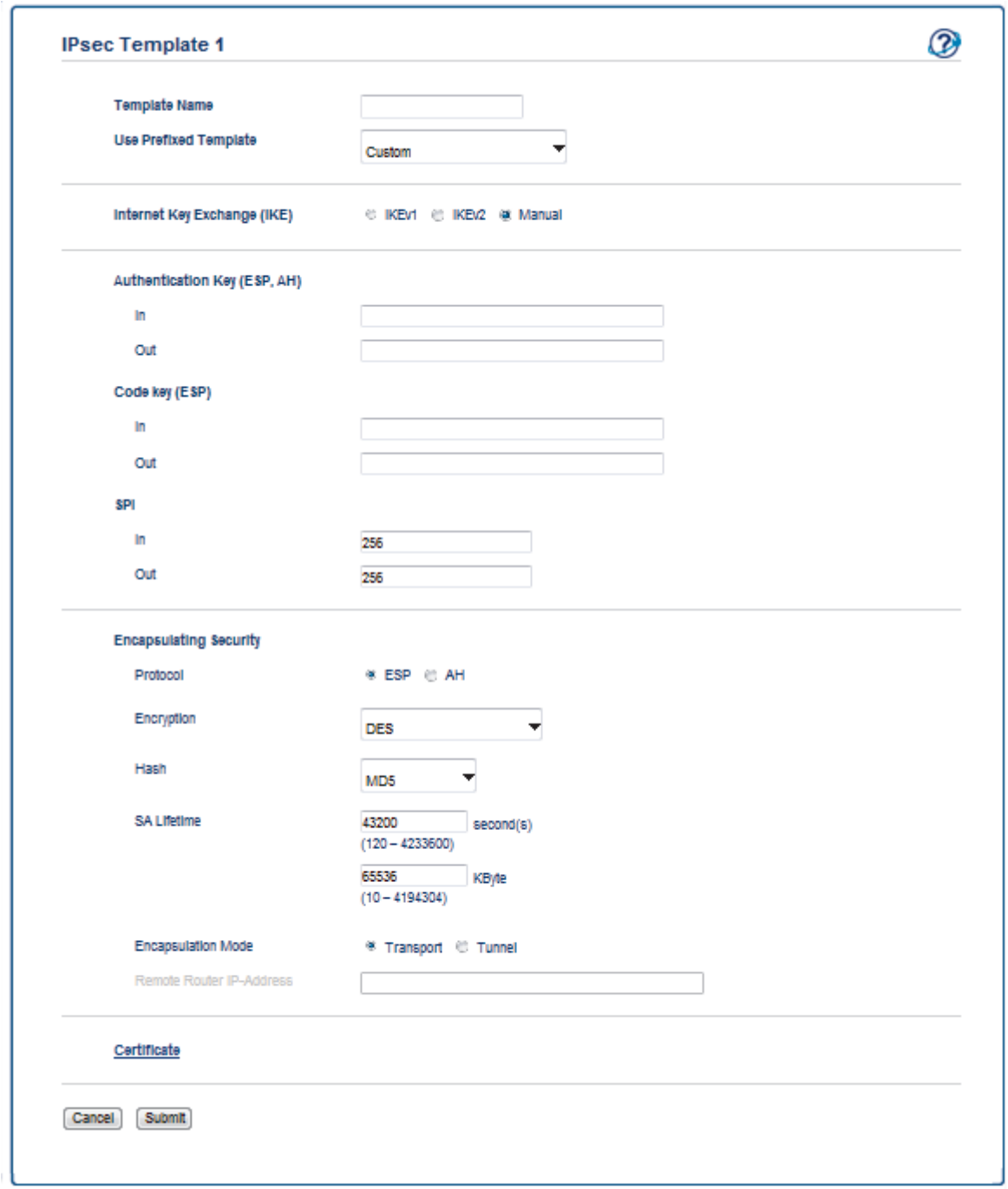

Template Name

Type a name for the template (up to 16 characters).

Use Prefixed Template

Select **Custom**.

Internet Key Exchange (IKE)

IKE is a communication protocol that is used to exchange encryption keys in order to carry out encrypted communication using IPsec. To carry out encrypted communication for that time only, the encryption algorithm that is necessary for IPsec is determined and the encryption keys are shared. For IKE, the encryption keys are exchanged using the Diffie-Hellman key exchange method, and encrypted communication that is limited to IKE is carried out.

Select **Manual**.

Authentication Key (ESP,AH)

Specify the key to use for authentication. Type the **In/Out** values.

These settings are necessary when **Custom** is selected for **Use Prefixed Template**, **Manual** is selected for **Internet Key Exchange (IKE)**, and a setting other than **None** is selected for **Hash** for **Encapsulating Security** section.

The number of characters you can set differs depending on the setting you chose for **Hash** in the **Encapsulating Security** section.

If the length of the specified authentication key is different than the selected hash algorithm, an error will occur.

- **MD5**: 128 bits (16 bytes)
- **SHA1**: 160 bits (20 bytes)
- **SHA256**: 256 bits (32 bytes)
- **SHA384**: 384 bits (48 bytes)
- **SHA512**: 512 bits (64 bytes)

When you specify the key in ASCII Code, enclose the characters in double quotation marks (").

Code key (ESP)

Specify the key to use for encryption. Type the **In/Out** values.

These settings are necessary when **Custom** is selected in **Use Prefixed Template**, **Manual** is selected in **Internet Key Exchange (IKE)**, and **ESP** is selected in **Protocol** in **Encapsulating Security**.

The number of characters you can set differs depending on the setting you chose for **Encryption** in the **Encapsulating Security** section.

If the length of the specified code key is different than the selected encryption algorithm, an error will occur.

- **DES**: 64 bits (8 bytes)
- **3DES**: 192 bits (24 bytes)
- **AES-CBC 128**: 128 bits (16 bytes)
- **AES-CBC 256**: 256 bits (32 bytes)

When you specify the key in ASCII Code, enclose the characters in double quotation marks (").

SPI

These parameters are used to identify security information. Generally, a host has multiple Security Associations (SAs) for several types of IPsec communication. Therefore, it is necessary to identify the applicable SA when an IPsec packet is received. The SPI parameter, which identifies the SA, is included in the Authentication Header (AH) and Encapsulating Security Payload (ESP) header.

These settings are necessary when **Custom** is selected for **Use Prefixed Template**, and **Manual** is selected for **Internet Key Exchange (IKE)**.

Enter the **In/Out** values. (3-10 characters)

Encapsulating Security

- **Protocol**

  Select **ESP** or **AH**.

- ESP is a protocol for carrying out encrypted communication using IPsec. ESP encrypts the payload (communicated contents) and adds additional information. The IP packet is comprised of the header and the encrypted payload, which follows the header. In addition to the encrypted data, the IP packet also includes information regarding the encryption method and encryption key, the authentication data, and so on.
- AH is part of the IPsec protocol that authenticates the sender and prevents manipulation of the data (ensures the completeness of the data). In the IP packet, the data is inserted immediately after the header. In addition, the packets include hash values, which are calculated using an equation from the communicated contents, secret key, and so on, in order to prevent the falsification of the sender and manipulation of the data. Unlike ESP, the communicated contents are not encrypted, and the data is sent and received as plain text.

- **Encryption**

  Select **DES**, **3DES**, **AES-CBC 128**, or **AES-CBC 256**. The encryption can be selected only when **ESP** is selected in **Protocol**.
- **Hash**

  Select **None**, **MD5**, **SHA1**, **SHA256**, **SHA384**, or **SHA512**. **None** can be selected only when **ESP** is selected in **Protocol**.
- **SA Lifetime**

  Specify the IKE SA lifetime.

  Type the time (seconds) and number of kilobytes (KByte) before the IPsec SA will expire.
- **Encapsulation Mode**

  Select **Transport** or **Tunnel**.
- **Remote Router IP-Address**

  Specify the IP address (IPv4 or IPv6) of the connection destination. Enter this information only when the **Tunnel** mode is selected.

SA (Security Association) is an encrypted communication method using IPsec or IPv6 that exchanges and shares information, such as the encryption method and encryption key, in order to establish a secure communication channel before communication begins. SA may also refer to a virtual encrypted communication channel that has been established. The SA used for IPsec establishes the encryption method, exchanges the keys, and carries out mutual authentication according to the IKE (Internet Key Exchange) standard procedure. In addition, the SA is updated periodically.

Related Information

- Configure an IPsec Template Using Web Based Management

Send or Receive an Email Securely

- Configure Email Sending or Receiving Using Web Based Management
- Send an Email with User Authentication
- Send or Receive an Email Securely Using SSL TLS

Configure Email Sending or Receiving Using Web Based Management

We recommend using Web Based Management to configure secured email sending with user authentication, or email sending and receiving using SSL/TLS.

1. Start your web browser.
2. Type "http://machine's IP address" in your browser's address bar (where "machine's IP address" is the machine's IP address).

   For example:

   http://192.168.1.2

   - If you are using a Domain Name System or enable a NetBIOS name, you can type another name, such as "SharedPrinter" instead of the IP address.
     - For example:

       http://SharedPrinter

     If you enable a NetBIOS name, you can also use the node name.
     - For example:

       http://brnxxxxxxxxxxxx

     The NetBIOS name can be found in the Network Configuration Report.
   - For Mac, access Web Based Management by clicking the machine's icon on the **Status Monitor** screen.
3. No password is required by default. Type a password if you have set one, and then click .
4. Click the **Network** tab.
5. Click **Protocol** in the left navigation bar.
6. In the **POP3/IMAP4/SMTP** field, click **Advanced Settings** and make sure the status of **POP3/IMAP4/SMTP** is **Enabled**.
7. Configure the **POP3/IMAP4/SMTP** settings.
   - Confirm that the email settings are correct after configuration by sending a test email.
   - If you do not know the POP3/IMAP4/SMTP server settings, contact your network administrator or Internet Service Provider (ISP).
8. When finished, click **Submit**.

   The **Test Send/Receive E-mail Configuration** dialog box appears.
9. Follow the instructions in the dialog box to test the current settings.

Related Information

- Send or Receive an Email Securely

Send an Email with User Authentication

Your Brother machine supports the SMTP-AUTH method to send email via an email server that requires user authentication. This method prevents unauthorised users from accessing the email server.

You can use SMTP-AUTH for email notification, email reports and I-Fax.

We recommend using Web Based Management to configure the SMTP authentication.

Email Server Settings

You must configure your machine's SMTP authentication method to match the method used by your email server. For details about your email server settings, contact your network administrator or Internet Service Provider (ISP).

To enable SMTP server authentication: in the Web Based Management **POP3/IMAP4/SMTP** screen, under **Server Authentication Method**, you must select **SMTP-AUTH**.

Related Information

- Send or Receive an Email Securely

Send or Receive an Email Securely Using SSL TLS

Your Brother machine supports SSL/TLS methods to send or receive an email via an email server that requires secure SSL/TLS communication. To send or receive email via an email server that is using SSL/TLS communication, you must configure SMTP over SSL/TLS, POP3 over SSL/TLS, or IMAP4 over SSL/TLS.

We recommend using Web Based Management to configure SSL/TLS.

Verify Server Certificate

Under **SSL/TLS**, if you choose **SSL** or **TLS**, the **Verify Server Certificate** check box will be selected automatically.

POP3/IMAP4/SMTP

Cancel Submit

Status Enabled

Send E-mail Settings(SMTP)

Server Address 0.0.0.0

Port 25

Server Authentication Method
- (●) None
- ( ) SMTP-AUTH

SMTP-AUTH Account Name

SMTP-AUTH Account Password

Enter password

Retype password

SSL/TLS
- (●) None
- ( ) SSL
- ( ) TLS
- [ ] Verify Server Certificate

Device E-mail Address brnxxxxxxxxxxxx@example.com

Receive E-mail Settings(POP3/IMAP4)

Protocol (●) POP3 ( ) IMAP4

Server Address 0.0.0.0

Port 110

Mailbox Name

Mailbox Password

Enter password

Retype password

[ ] Use APOP (POP3 Only)

Select Mail Folder Name(IMAP4 Only)
- (●) Default(Inbox)
- ( ) Specified :

SSL/TLS
- (●) None
- ( ) SSL
- ( ) TLS
- [ ] Verify Server Certificate

Segmented Message Timeout 120 minute(s)

I-Fax>>

CA Certificate>>

E-mail report>>

Notification>>

Cancel Submit

- Before you verify the server certificate, you must import the CA certificate issued by the CA that signed the server certificate. Contact your network administrator or your Internet Service Provider (ISP) to confirm if importing a CA certificate is necessary.
- If you do not need to verify the server certificate, clear the **Verify Server Certificate** check box.

Port Number

If you select **SSL** or **TLS** for SMTP, POP3, or IMAP4, the **Port** value will be changed to match the protocol. To change the port number manually, type the port number after you choose **SSL** or **TLS** for the **SSL/TLS** settings.

You must configure your machine's POP3/IMAP4/SMTP communication method to match the method used by your email server. For details about your email server settings, contact your network administrator or your ISP.

In most cases, the secured webmail services require the following settings:

SMTP	**Port**	25
	Server Authentication Method	**SMTP-AUTH**
	SSL/TLS	**TLS**
POP3	**Port**	995
	SSL/TLS	**SSL**
IMAP4	**Port**	993
	SSL/TLS	**SSL**

Related Information

- Send or Receive an Email Securely

Use IEEE 802.1x Authentication for a Wired or a Wireless Network

- What Is IEEE 802.1x Authentication?
- Configure IEEE 802.1x Authentication for a Wired or a Wireless Network Using Web Based Management (Web Browser)
- IEEE 802.1x Authentication Methods

What Is IEEE 802.1x Authentication?

IEEE 802.1x is an IEEE standard for wired and wireless networks that limits access from unauthorised network devices. Your Brother machine (supplicant) sends an authentication request to a RADIUS server (Authentication server) through your access point or HUB. After your request has been verified by the RADIUS server, your machine can access the network.

Related Information

- Use IEEE 802.1x Authentication for a Wired or a Wireless Network

Configure IEEE 802.1x Authentication for a Wired or a Wireless Network Using Web Based Management (Web Browser)

- If you configure your machine using EAP-TLS authentication, you must install the client certificate issued by a CA before you start configuration. Contact your network administrator about the client certificate. If you have installed more than one certificate, we recommend writing down the certificate name you want to use.
- Before you verify the server certificate, you must import the CA certificate that has been issued by the CA that signed the server certificate. Contact your network administrator or your Internet Service Provider (ISP) to confirm whether a CA certificate import is necessary.

You can also configure IEEE 802.1x authentication using:

- BRAdmin Professional (Wired and wireless network)
- Wireless setup wizard from the control panel (Wireless network)
- Wireless setup wizard on the CD-ROM (Wireless network)

1. Start your web browser.
2. Type "http://machine's IP address" in your browser's address bar (where "machine's IP address" is the machine's IP address).

   For example:

   http://192.168.1.2

   - If you are using a Domain Name System or enable a NetBIOS name, you can type another name, such as "SharedPrinter" instead of the IP address.
     - For example:

       http://SharedPrinter

     If you enable a NetBIOS name, you can also use the node name.
     - For example:

       http://brnxxxxxxxxxxxx

     The NetBIOS name can be found in the Network Configuration Report.
   - For Mac, access Web Based Management by clicking the machine's icon on the **Status Monitor** screen.
3. No password is required by default. Type a password if you have set one, and then click .
4. Click the **Network** tab.
5. Do one of the following:

Option	Description
Wired network	Click the **Wired** tab in the left navigation bar, and then select **Wired 802.1x Authentication**.
Wireless network	Click the **Wireless** tab in the left navigation bar, and then select **Wireless (Enterprise)**.

6. Configure the IEEE 802.1x authentication settings.

- To enable IEEE 802.1x authentication for wired networks, select **Enabled** for **Wired 802.1x status** on the **Wired 802.1x Authentication** page.
- If you are using **EAP-TLS** authentication, you must select the client certificate that has been installed (shown with certificate name) for verification from the **Client Certificate** drop-down list.
- If you select **EAP-FAST**, **PEAP**, **EAP-TTLS**, or **EAP-TLS** authentication, select the verification method from the **Server Certificate Verification** drop-down list. Verify the server certificate using the CA certificate, imported to the machine in advance, that has been issued by the CA that signed the server certificate.

Select one of the following verification methods from the **Server Certificate Verification** drop-down list:

Option	Description
No Verification	The server certificate can always be trusted. The verification is not performed.
CA Cert.	The verification method to check the CA reliability of the server certificate, using the CA certificate that has been issued by the CA that signed the server certificate.
CA Cert. + ServerID	The verification method to check the common name [1] value of the server certificate, in addition to the CA reliability of the server certificate.

7. When finished with configuration, click **Submit**.

   For wired networks: After configuring, connect your machine to the IEEE 802.1x supported network. After a few minutes, print the Network Configuration Report to check the <**Wired IEEE 802.1x**> Status.

Option	Description
Success	The wired IEEE 802.1x function is enabled and the authentication was successful.
Failed	The wired IEEE 802.1x function is enabled; however, the authentication failed.
Off	The wired IEEE 802.1x function is not available.

Related Information

- Use IEEE 802.1x Authentication for a Wired or a Wireless Network

1 The common name verification compares the common name of the server certificate to the character string configured for the **Server ID**. Before you use this method, contact your system administrator about the server certificate's common name and then configure **Server ID**.

IEEE 802.1x Authentication Methods

LEAP (Wireless network)

Lightweight Extensible Authentication Protocol (LEAP) is a proprietary EAP method developed by Cisco Systems, Inc., which uses a user ID and password for authentication.

EAP-FAST

Extensible Authentication Protocol-Flexible Authentication via Secured Tunneling (EAP-FAST) has been developed by Cisco Systems, Inc., which uses a user ID and password for authentication, and symmetric key algorithms to achieve a tunnelled authentication process.

The Brother machine supports the following inner authentication methods:

- EAP-FAST/NONE
- EAP-FAST/MS-CHAPv2
- EAP-FAST/GTC

EAP-MD5 (Wired network)

Extensible Authentication Protocol-Message Digest Algorithm 5 (EAP-MD5) uses a user ID and password for challenge-response authentication.

PEAP

Protected Extensible Authentication Protocol (PEAP) is a version of EAP method developed by Cisco Systems, Inc., Microsoft Corporation and RSA Security. PEAP creates an encrypted Secure Sockets Layer (SSL)/Transport Layer Security (TLS) tunnel between a client and an authentication server, for sending a user ID and password. PEAP provides mutual authentication between the server and the client.

The Brother machine supports the following inner authentications:

- PEAP/MS-CHAPv2
- PEAP/GTC

EAP-TTLS

Extensible Authentication Protocol-Tunneled Transport Layer Security (EAP-TTLS) has been developed by Funk Software and Certicom. EAP-TTLS creates a similar encrypted SSL tunnel to PEAP, between a client and an authentication server, for sending a user ID and password. EAP-TTLS provides mutual authentication between the server and the client.

The Brother machine supports the following inner authentications:

- EAP-TTLS/CHAP
- EAP-TTLS/MS-CHAP
- EAP-TTLS/MS-CHAPv2
- EAP-TTLS/PAP

EAP-TLS

Extensible Authentication Protocol-Transport Layer Security (EAP-TLS) requires digital certificate authentication both at a client and an authentication server.

Related Information

- Use IEEE 802.1x Authentication for a Wired or a Wireless Network

Store Print Log to Network

- Store Log to Network Overview
- Configure the Store Print Log to Network Settings Using Web Based Management
- Use the Store Print Log to Network's Error Detection Setting
- Use Store Print Log to Network with Secure Function Lock 3.0

Store Log to Network Overview

The Store Print Log to Network feature allows you to save the print log file from your Brother machine to a network server using the Common Internet File System (CIFS) protocol. You can record the ID, type of print job, job name, user name, date, time and the number of printed pages for every print job. CIFS is a protocol that runs over TCP/IP, allowing computers on a network to share files over an intranet or the Internet.

The following print functions are recorded in the print log:

- Print jobs from your computer
- USB Direct Print (supported models only)
- Copy
- Received Fax (supported models only)
- Web Connect Print

- The Store Print Log to Network feature supports Kerberos authentication and NTLMv2 authentication. You must configure the SNTP protocol (network time server), or you must set the date, time and time zone correctly on the control panel for authentication.
- You can set the file type to TXT or CSV when storing a file to the server.

Related Information

- Store Print Log to Network

Configure the Store Print Log to Network Settings Using Web Based Management

1. Start your web browser.
2. Type "http://machine's IP address" in your browser's address bar (where "machine's IP address" is the machine's IP address).

   For example:

   http://192.168.1.2
3. No password is required by default. Type a password if you have set one, and then click .
4. Click the **Administrator** tab.
5. Click the **Store Print Log to Network** menu.
6. In the **Print Log** field, click **On**.
7. Configure the following settings:

Option	Description
Network Folder Path	Type the destination folder where your log will be stored on the CIFS server (for example: brother\abc).
File Name	Type the file name you want to use for the print log (up to 32 characters).
File Type	Select the **TXT** or **CSV** option for the Print Log file type.
Auth. Method	Select the authentication method required for access to the CIFS server: **Auto**, **Kerberos**, or **NTLMv2**. Kerberos is an authentication protocol which allows devices or individuals to securely prove their identity to network servers using a single sign-on. NTLMv2 is the authentication method used by Windows to log into servers. • **Auto**: If you select **Auto**, NTLMv2 will be used to the authentication method. • **Kerberos**: Select the **Kerberos** option to use Kerberos authentication only. • **NTLMv2**: Select the **NTLMv2** option to use NTLMv2 authentication only. • For the **Kerberos** and **NTLMv2** authentication, you must also configure the **Date&Time** settings or the SNTP protocol (network time server) and DNS server. • You can also configure the `Date & Time` settings from the machine's control panel.
Username	Type the user name for the authentication (up to 96 characters). If the user name is part of a domain, enter the user name in one of the following styles: user@domain or domain\user.
Password	Type the password for the authentication (up to 32 characters).
Kerberos Server Address (if needed)	Type the KDC host address (for example: kerberos.example.com; up to 64 characters) or the IP address (for example: 192.168.56.189).
Error Detection Setting	Choose what action should be taken when the Print Log cannot be stored to the server due to a network error.

8. In the **Connection Status** field, confirm the last log status.

You can also confirm the error status on the LCD of your machine.

9. Click **Submit** to display the **Test Print Log to Network** page.
   To test your settings, click **Yes** and then go to the next step.
   To skip the test, click **No**. Your settings will be submitted automatically.
10. The machine will test your settings.
11. If your settings are accepted, **Test OK** appears on the screen.
    If **Test Error** appears, check all settings, and then click **Submit** to display the Test page again.

Related Information

- Store Print Log to Network
- Synchronize Time with the SNTP Server Using Web Based Management
- Configure the SNTP Protocol Using Web Based Management

Use the Store Print Log to Network's Error Detection Setting

Use Error Detection Settings to determine the action that is taken when the print log cannot be stored to the server due to a network error.

1. Start your web browser.
2. Type "http://machine's IP address" in your browser's address bar (where "machine's IP address" is the machine's IP address).

   For example:

   http://192.168.1.2
3. No password is required by default. Type a password if you have set one, and then click .
4. Click the **Administrator** tab.
5. Click the **Store Print Log to Network** menu in the left navigation bar.
6. In the **Error Detection Setting** section, select the **Cancel Print** or **Ignore Log & Print** option.

Option	Description
Cancel Print	If you select the **Cancel Print** option, the print jobs are cancelled when the print log cannot be stored to the server. Even if you select the **Cancel Print** option, your machine will print a received fax.

Ignore Log & Print	If you select the **Ignore Log & Print** option, the machine prints the documentation even if the print log cannot be stored to the server.
	When the store print log function has recovered, the print log is recorded as follows:
	`Id, Type, Job Name, User Name, Date, Time, Print Pages`
	`1, Print(xxxxxxx), "Document01.doc", "user01", 03/03/20xx, 14:01:32, 52`
	`2, Print(xxxxxxx), "Document02.doc", "user01", 03/03/20xx, 14:45:30, ?` — a
	`3, <ERROR>, ?, ?, ?, ?, ?` — b
	`4, Print(xxxxxxx), "Report01.xls", "user02", 03/03/20xx, 19:30:40, 4`
	a. If the log cannot be stored at the end of printing, the print log except the number of printed pages will be recorded.
	b. If the print log cannot be stored at the beginning and the end of printing, the print log of the job will not be recorded. When the function has recovered, the error is reflected in the log.

7. Click **Submit** to display the **Test Print Log to Network** page.

   To test your settings, click **Yes** and then go to the next step.

   To skip the test, click **No**. Your settings will be submitted automatically.
8. The machine will test your settings.
9. If your settings are accepted, **Test OK** appears on the screen.

   If **Test Error** appears, check all settings, and then click **Submit** to display the Test page again.

Related Information

- Store Print Log to Network

Use Store Print Log to Network with Secure Function Lock 3.0

When Secure Function Lock 3.0 is active, the names of the registered users for copy, Fax RX, Web Connect Print and USB Direct Print (if available) are recorded in the Store Print Log to Network report. When the Active Directory Authentication is enabled, logged on user name will be recorded in the Store Print Log to Network report:

```
Id, Type, Job Name, User Name, Date, Time, Print Pages
1, Copy, -, -, 04/04/20xx, 09:05:12, 3
2, Fax, -, -, 04/04/20xx, 09:45:30, 5
3, Copy, -, "BOB", 04/04/20xx, 10:20:30, 4
4, Fax, -, "BOB", 04/04/20xx, 10:35:12, 3
5, USB Direct, -, "JOHN", 04/04/20xx, 11:15:43, 6
```

Related Information

- Store Print Log to Network

Mobile/Web Connect

- Use Web Services from Your Brother Machine
- Use Brother Web Services
- Print with Google Cloud Print™
- Print with AirPrint
- Print with Mopria™
- Print and Scan from a Mobile Device
- Print and Scan Using Near-Field Communication (NFC)

Use Web Services from Your Brother Machine

Related Models: MFC-L5700DN/MFC-L5755DW/MFC-L5900DW/MFC-L6700DW/MFC-L6900DW

Certain websites provide services that allow users to upload and view images and files on the website. Your Brother machine can scan images and upload them to these services, and also download from and print images that are already uploaded to these services.

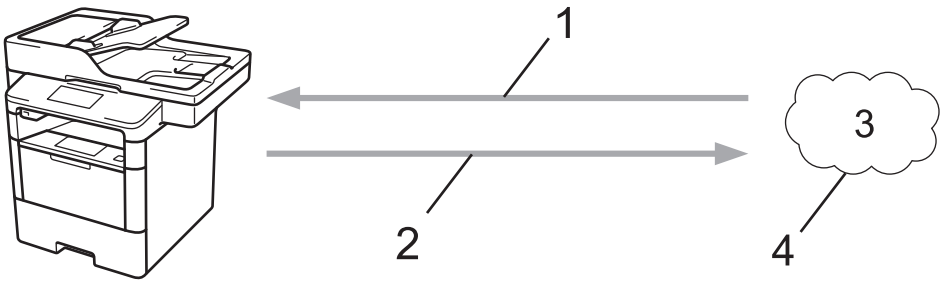

1. Printing
2. Scanning
3. Photos, images, documents and other files
4. Web Service

The following services can be accessed from your Brother machine: Picasa Web Albums™, Google Drive™, Flickr®, Facebook, Evernote®, Dropbox, OneNote, OneDrive and Box.

For more detailed information, see the *Web Connect Guide*. Go to your model's **Manuals** page on the Brother Solutions Center at support.brother.com.

Related Information

- Mobile/Web Connect

Use Brother Web Services

Related Models: MFC-L5700DN/MFC-L5755DW/MFC-L5900DW/MFC-L6700DW/MFC-L6900DW

Brother Web Services allow you to scan, print, and manage your files in the cloud or other online file management services. Brother Web Services also manages cloud servers, so you can transfer received faxes.

- Outline and Scan

  Use a red pen to outline sections of your document, and then scan the document. The red outlined areas are captured and processed based on your settings: save the areas to a cloud service.

  1. Web Service

- Copy Outlined Area

  Use a red pen to outline sections of your document, and then scan the document. The red outlined areas are extracted and printed together.

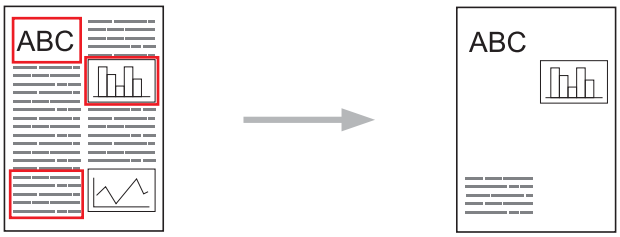

- Cut Outlined Area

  Use a red pen to outline sections of your document, and then scan the document. The red outlined areas are deleted and the remaining information is printed.

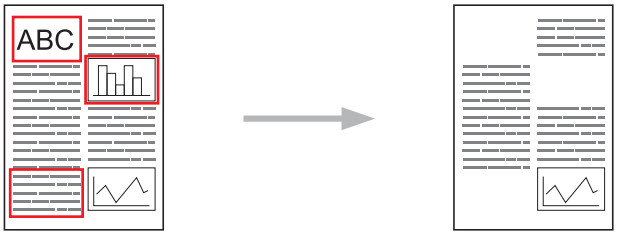

- NotePrint and NoteScan

Print different types of note sheets and the folders designed to hold them. After writing your notes, scan the note sheets and save them to a cloud service.

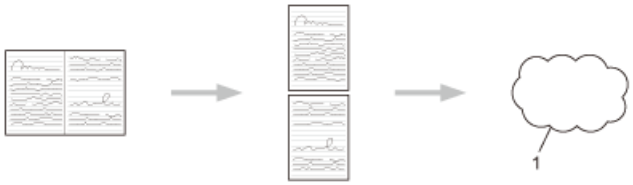

1. Web Service

For more detailed information, see the *Web Connect Guide*. Go to your model's **Manuals** page on the Brother Solutions Center at support.brother.com.

Related Information

- Mobile/Web Connect

Print with Google Cloud Print™

Google Cloud Print™ is a Google-provided service that allows you to print to a printer registered to your Google account using a network-compatible device (such as a mobile phone or computer) without installing the printer driver on the device.

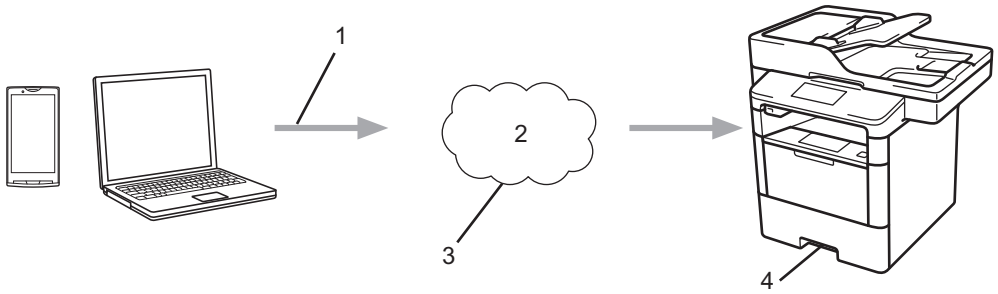

1. Print request
2. Internet
3. Google Cloud Print™
4. Printing

Related Information

- Mobile/Web Connect

Print with AirPrint

Use Brother AirPrint to wirelessly print photos, emails, web pages, and documents from your iPad, iPhone and iPod touch without installing a printer driver on the device.

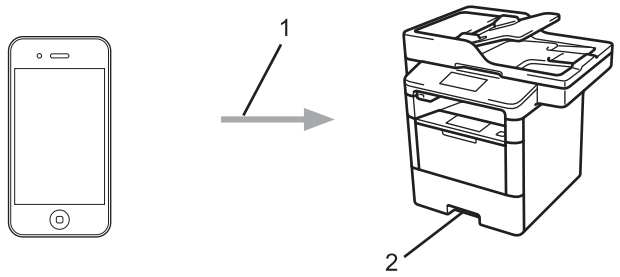

1. Print request
2. Printed photos, emails, web pages, and documents

- AirPrint also lets you send faxes directly from your Mac computer without printing them (requires OS X 10.8.5 or later).

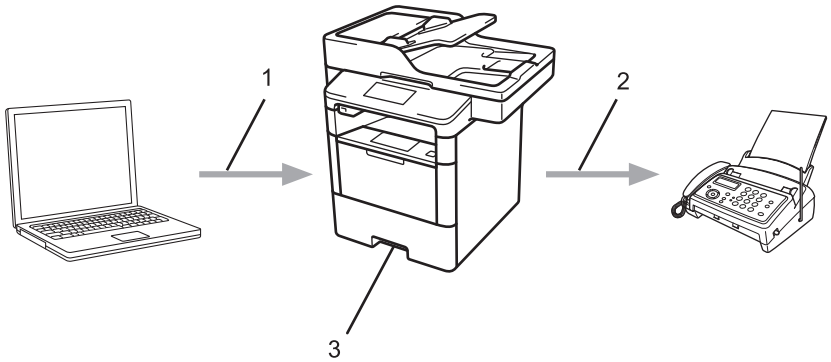

1. Wired or wireless network
2. Telephone line
3. Your Brother machine

- AirPrint also lets you scan documents to your Mac computer without installing a driver on the device (requires OS X 10.9 or later).

For more detailed information, see the *AirPrint Guide*. Go to your model's **Manuals** page on the Brother Solutions Center at support.brother.com.

Related Information

- Mobile/Web Connect

Print with Mopria™

Mopria™ Print Service is a print feature on Android™ mobile devices (Android™ version 4.4 or later) developed by the Mopria™ Alliance. With this service, you can connect to the same network as your machine and print without additional setup. Many native Android™ apps, including Google Chrome™, Gmail, and Gallery, support printing.

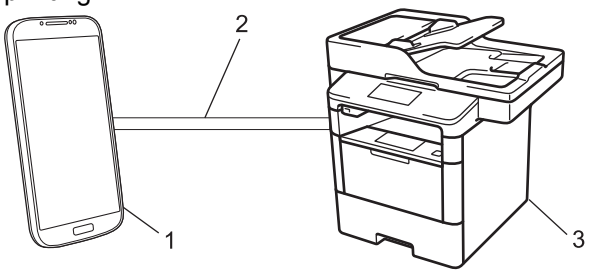

1. Android™ 4.4 or later
2. Wi-Fi® Connection
3. Your Brother machine

You must download the Mopria™ Print Service from the Google Play™ Store and install it on your Android™ device. Be sure to turn the service on before using this feature.

Related Information

- Mobile/Web Connect

Print and Scan from a Mobile Device

Use Brother iPrint&Scan to print and scan from various mobile devices.

- For Android™ Devices

  Brother iPrint&Scan allows you to use features of your Brother machine directly from your Android™ device, without using a computer.

  Download and install Brother iPrint&Scan from the Google Play™ Store.
- For iOS Devices

  Brother iPrint&Scan allows you to use features of your Brother machine directly from your iPhone, iPod touch, iPad, and iPad mini.

  Download and install Brother iPrint&Scan from the App Store.
- For Windows Phone Devices

  Brother iPrint&Scan allows you to use features of your Brother machine directly from your Windows Phone, without using a computer.

  Download and install Brother iPrint&Scan from the Windows Phone Store (Windows Phone Marketplace).

For more detailed information, see the *Mobile Print/Scan Guide for Brother iPrint&Scan*. Go to your model's **Manuals** page on the Brother Solutions Center at support.brother.com.

Related Information

- Mobile/Web Connect

Print and Scan Using Near-Field Communication (NFC)

Related Models: MFC-L6900DW

Near-Field Communication (NFC) allows for simple transactions, data exchange, and wireless connections between two devices that are in close range of each other.

If your Android™ device is NFC-enabled, you can print data (photos, PDF files, text files, web pages and email messages) from the device or scan photos and documents to the device by touching it to the NFC logo on the left side of your machine's control panel.

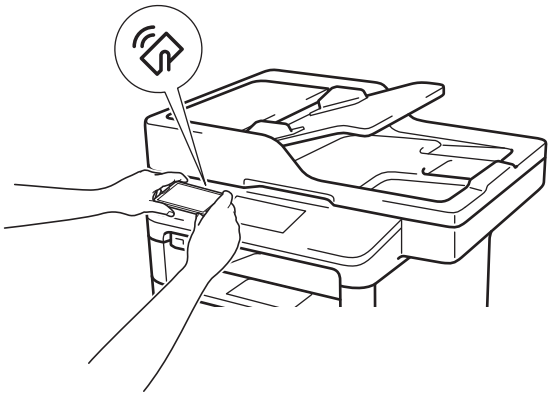

You must download and install Brother iPrint&Scan on your Android™ device to use this feature. For more detailed information, see the *Mobile Print/Scan Guide for Brother iPrint&Scan*. Go to your model's **Manuals** page on the Brother Solutions Center at support.brother.com.

Related Information

- Mobile/Web Connect

ControlCenter

Use Brother's ControlCenter software utility to quickly access your frequently-used applications. Using ControlCenter gives you direct access to specific applications.

- ControlCenter4 (Windows)
- ControlCenter2 (Mac)

ControlCenter4 (Windows)

- Change the Operation Mode in ControlCenter4 (Windows)
- Scan Using ControlCenter4 Home Mode (Windows)
- Scan Using ControlCenter4 Advanced Mode (Windows)
- Set Up the Brother Machine Using ControlCenter4 (Windows)
- Create a Custom Tab Using ControlCenter4 Advanced Mode (Windows)

Change the Operation Mode in ControlCenter4 (Windows)

ControlCenter4 has two operation modes: **Home Mode** and **Advanced Mode**. You can change modes at any time.

Home Mode

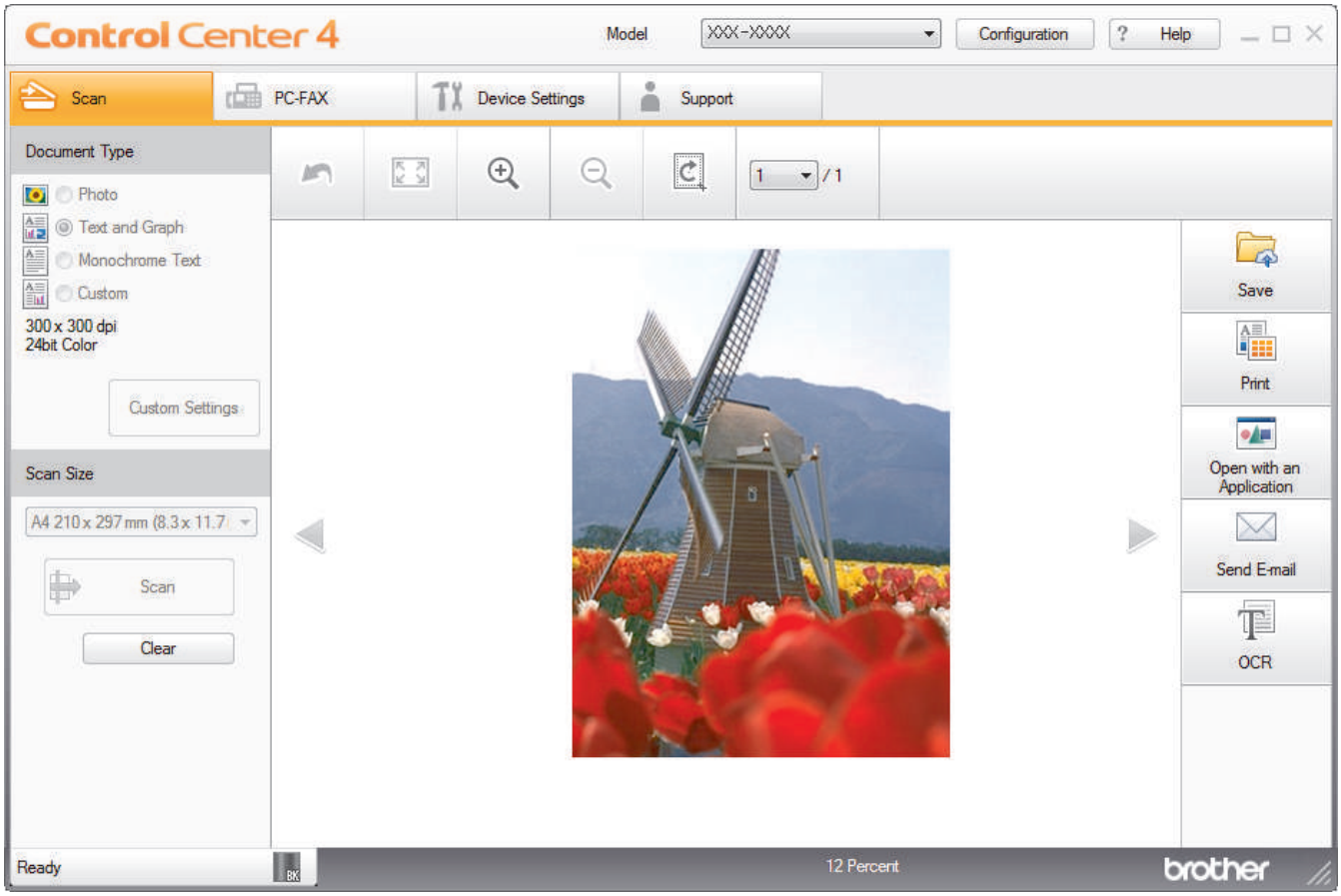

Advanced Mode

- **Home Mode**

  ControlCenter4 Home Mode lets you access your machine's main features easily.

- **Advanced Mode**

ControlCenter4 Advanced Mode gives you more control over the details of your machine's features and allows you to customise one-button scan actions.

To change operation mode:

1. Click the (**ControlCenter4**) icon in the task tray, and then select **Open**.
2. Click the **Configuration** button, and then select **Mode Select**.
3. The mode selection dialog box appears. Select either the **Home Mode** or **Advanced Mode** option.

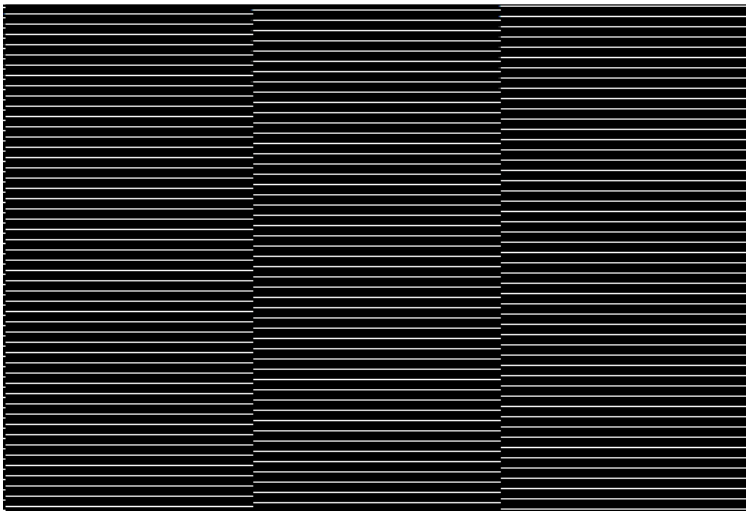

4. Click **OK**.

Related Information

- ControlCenter4 (Windows)

Scan Using ControlCenter4 Home Mode (Windows)

Use ControlCenter4 Home Mode to access your machine's main features.

- Scan Using ControlCenter4 Home Mode (Windows)
- Save Scanned Data to a Folder as a PDF File Using ControlCenter4 Home Mode (Windows)
- Scan Both Sides of a Document Automatically Using ControlCenter4 Home Mode (Windows)
- Scan Settings for ControlCenter4 Home Mode (Windows)

Scan Using ControlCenter4 Advanced Mode (Windows)

ControlCenter4 Advanced Mode gives you more control over the details of your machine's features and allows you to customise one-button scan actions.

- Scan Photos and Graphics Using ControlCenter4 Advanced Mode (Windows)
- Save Scanned Data to a Folder as a PDF File Using ControlCenter4 Advanced Mode (Windows)
- Scan Both Sides of a Document Automatically Using ControlCenter4 Advanced Mode (Windows)
- Scan Both Sides of an ID Card Using ControlCenter4 Advanced Mode (Windows)
- Scan to Email Attachment Using ControlCenter4 Advanced Mode (Windows)
- Scan to an Editable Text File (OCR) Using ControlCenter4 Advanced Mode (Windows)
- Scan Settings for ControlCenter4 Advanced Mode (Windows)

Set Up the Brother Machine Using ControlCenter4 (Windows)

Related Models: MFC-L5700DN/MFC-L5755DW/MFC-L5900DW/MFC-L6700DW/MFC-L6900DW

If Secure Function Lock is set to On, you cannot use Remote Setup.

1. Click the (**ControlCenter4**) icon in the task tray, and then click **Open**.
2. Click the **Device Settings** tab.
3. Click the **Remote Setup** button.
4. Configure the settings as needed.

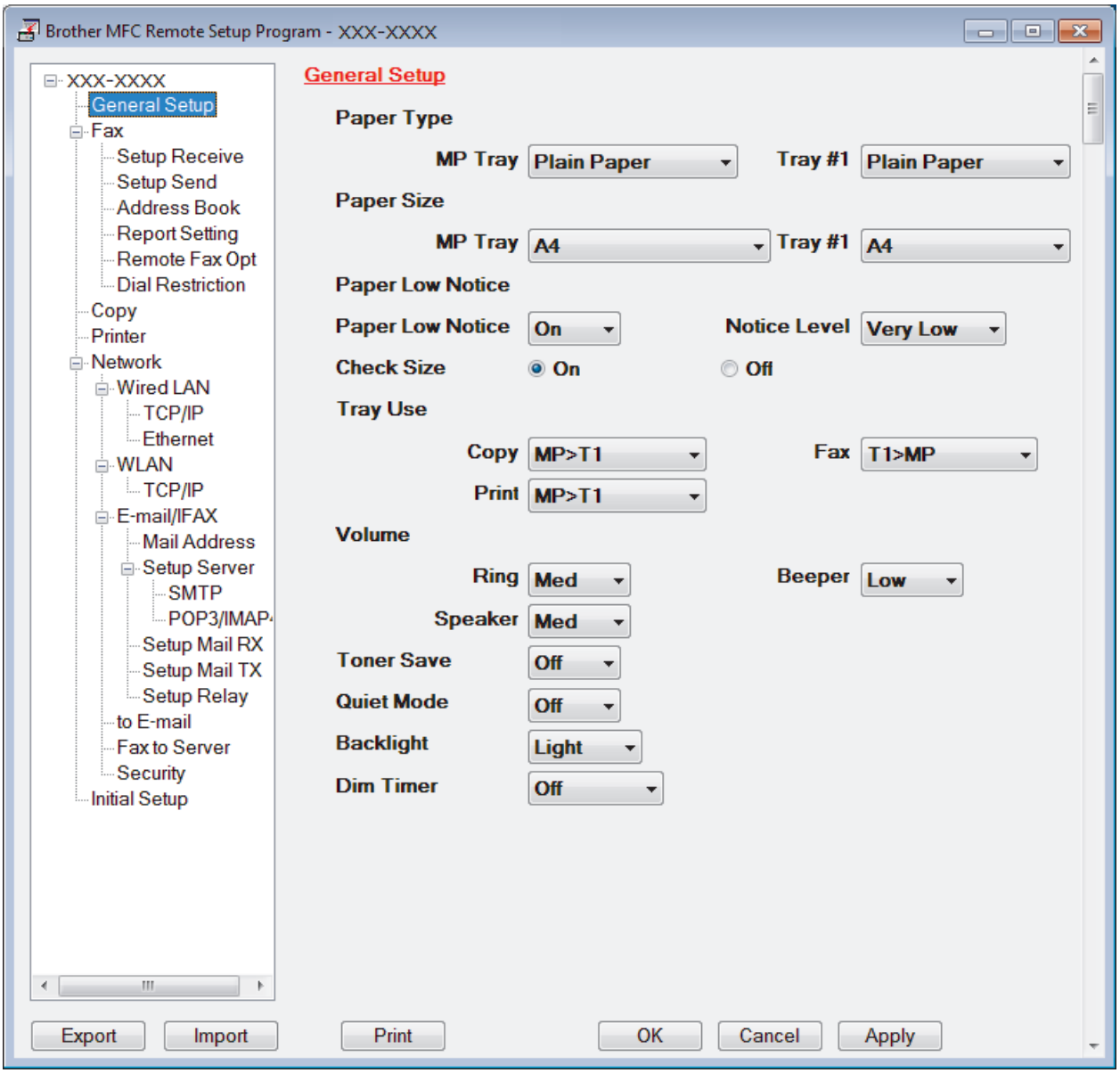

Export

Click to save the current configuration settings to a file.

Click **Export** to save your address book or all settings for your machine.

Import

Click to import a file and read its settings.

Print

Click to print the selected items on the machine. You cannot print the data until it is uploaded to the machine. Click **Apply** to upload the new data to the machine, and then click **Print**.

OK

Click to start uploading data to the machine, and then exit the Remote Setup Program. If an error message appears, confirm that your data is correct, and then click **OK**.

Cancel

Click to exit the Remote Setup Program without uploading data to the machine.

Apply

Click to upload data to the machine without exiting the Remote Setup Program.

5. Click **OK**.

- If your computer is protected by a firewall and is unable to use Remote Setup, you may need to configure the firewall settings to allow communication through port numbers 137 and 161.
- If you are using Windows Firewall and you installed the Brother software and drivers from the CD-ROM, the necessary firewall settings have already been set.

Related Information

- ControlCenter4 (Windows)
- Remote Setup (Windows)

Create a Custom Tab Using ControlCenter4 Advanced Mode (Windows)

You can create up to three customised tabs, each including up to five customised buttons, with your preferred settings.

Select **Advanced Mode** as the mode setting for ControlCenter4.

1. Click the (**ControlCenter4**) icon in the task tray, and then click **Open**.
2. Click the **Configuration** button, and then select **Create custom tab**.
   A custom tab is created.
3. To change the name of a custom tab, right-click the custom tab, and then select **Rename custom tab**.
4. Click the **Configuration** button, select **Create custom button**, and then select the button you want to create.
   The settings dialog box appears.
5. Type the button name, and then change the settings, if needed. Click **OK**.
   The setting options vary depending on the button you select.

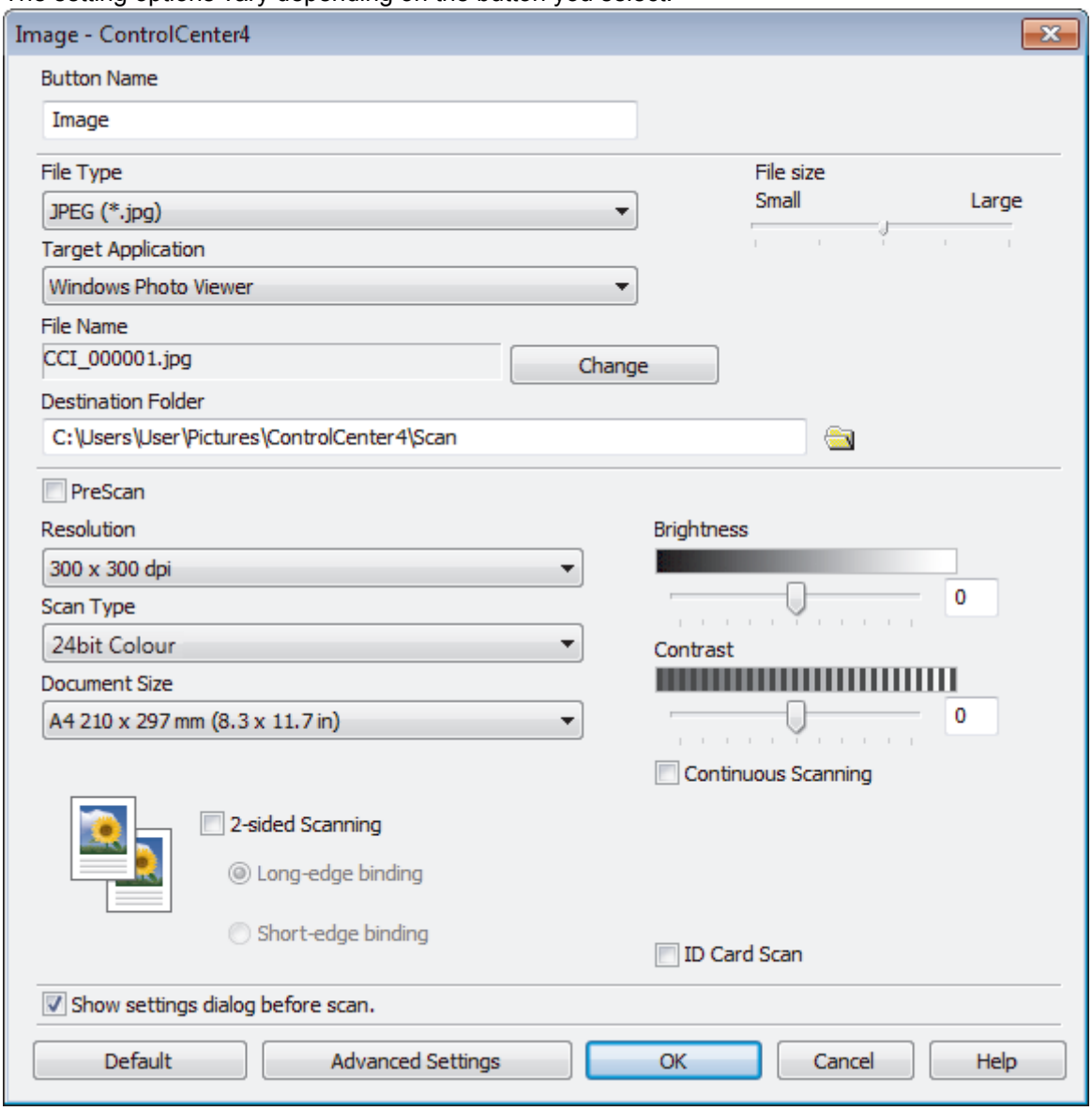

You can change or remove the created tab, button, or settings. Click the **Configuration** button, and then follow the menu.

Related Information

- ControlCenter4 (Windows)

ControlCenter2 (Mac)

- Scan Using ControlCenter2 (Mac)
- Set Up the Brother Machine Using ControlCenter2 (Mac)

Scan Using ControlCenter2 (Mac)

Use Brother's ControlCenter software to scan photos and save them as JPEGs, PDFs, or other file formats.

- Scan Using ControlCenter2 (Mac)
- Save Scanned Data to a Folder as a PDF File Using ControlCenter2 (Mac)
- Scan Both Sides of a Document Automatically Using ControlCenter2 (Mac)
- Scan Both Sides of an ID Card Using ControlCenter2 (Mac)
- Scan to Email Attachment Using ControlCenter2 (Mac)
- Scan to an Editable Text File (OCR) Using ControlCenter2 (Mac)

Set Up the Brother Machine Using ControlCenter2 (Mac)

Related Models: MFC-L5700DN/MFC-L5755DW/MFC-L5900DW/MFC-L6700DW/MFC-L6900DW

If Secure Function Lock is set to On, you cannot use Remote Setup.

1. In the **Finder** menu bar, click **Go** > **Applications** > **Brother**, and then double-click the (**ControlCenter**) icon.
   The **ControlCenter2** screen appears.
2. Click the **DEVICE SETTINGS** tab.
3. Click the **Remote Setup** button.
   The Remote Setup Program screen appears.

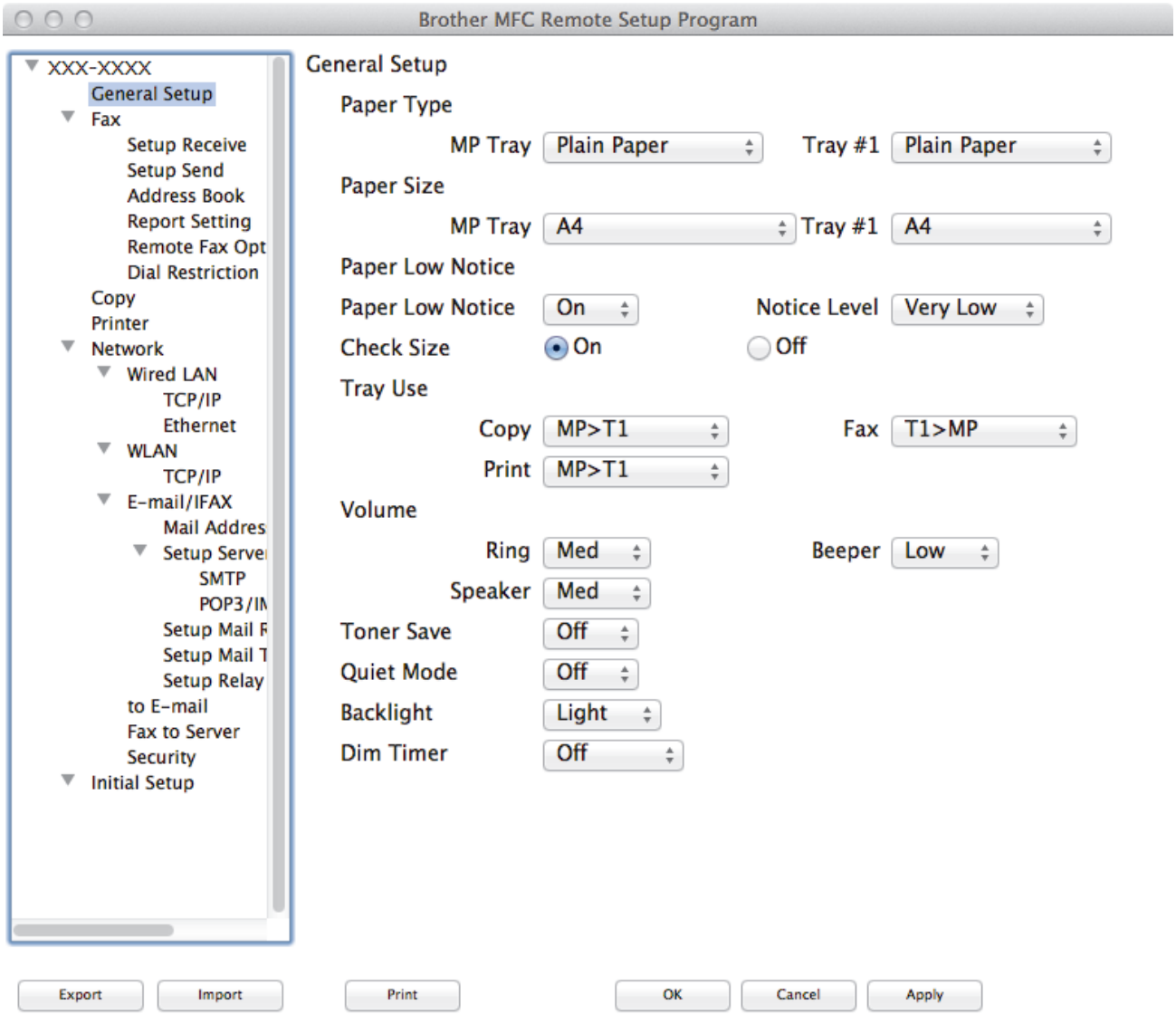

4. Configure the settings as needed.

   Export

   Click to save the current configuration settings to a file.

Click **Export** to save your address book or all settings for your machine.

Import

Click to import a file and read its settings.

Print

Click to print the selected items on the machine. You cannot print the data until it is uploaded to the machine. Click **Apply** to upload the new data to the machine, and then click **Print**.

OK

Click to start uploading data to the machine, and then exit the Remote Setup Program. If an error message appears, enter the correct data again, and then click **OK**.

Cancel

Click to exit the Remote Setup Program without uploading data to the machine.

Apply

Click to upload data to the machine without exiting the Remote Setup Program.

5. When finished, click **OK**.

Related Information

- ControlCenter2 (Mac)
- Remote Setup (Mac)

Troubleshooting

Use this section to resolve typical problems you may encounter when using your Brother machine. You can correct most problems yourself.

IMPORTANT

For technical help, you must call Brother customer service or your local Brother dealer.

Using non-Brother supplies may affect the print quality, hardware performance, and machine reliability.

If you need additional help, go to the Brother Solutions Center at support.brother.com.

First, check the following:

- The machine's power cord is connected correctly and the machine's power is on. See the *Quick Setup Guide*.
- All of the protective materials have been removed. See the *Quick Setup Guide*.
- Paper is loaded correctly in the paper tray.
- The interface cables are securely connected to the machine and the computer, or the wireless connection is set up on both the machine and your computer.
- Error and maintenance messages

If you did not solve the problem with the checks, identify the problem and then see *Related Information*.

Related Information

- Error and Maintenance Messages
- Document Jams
- Paper Jams
- Printing Problems
- Improve the Print Quality
- Telephone and Fax Problems
- Network Problems
- Other Problems
- Check the Machine Information
- Reset Your Brother Machine

Error and Maintenance Messages

(MFC-L6900DW)

If the LCD displays errors and your Android™ device supports the NFC feature, touch your device to the NFC logo on your Brother machine to access the Brother Solutions Center and browse the latest FAQs from your device. (Your mobile telephone provider's message and data rates may apply.)

Make sure the NFC settings of both your Brother machine and your Android™ device are set to On.

As with any sophisticated office product, errors may occur and supply items may have to be replaced. If this happens, your machine identifies the error or required routine maintenance and shows the appropriate message. The most common error and maintenance messages are shown in the table.

Follow the instructions in the **Action** column to solve the error and remove the message.

You can correct most errors and perform routine maintenance by yourself. If you need more tips: Visit support.brother.com, and click **FAQs & Troubleshooting**.

Error Message	Cause	Action
2-sided Disabled	The back cover of the machine is not closed completely.	Close the back cover of the machine until it locks in the closed position.
	The 2-sided tray is not installed completely.	Install the 2-sided tray firmly in the machine.
Access Denied	The function you want to use is restricted by Secure Function Lock 3.0.	Call your administrator to check your Secure Function Lock Settings.
Cartridge Error	The toner cartridge is not installed correctly.	Remove the toner cartridge and drum unit assembly. Take out the toner cartridge, and put it back in the drum unit again. Reinstall the toner cartridge and drum unit assembly in the machine. If the problem continues, contact Brother customer service or your local Brother dealer.
Comm.Error	Poor telephone line quality caused a communication error.	Send the fax again or connect the machine to another telephone line. If the problem continues, contact the telephone company and ask them to check your telephone line.
Cooling Down	The temperature of the inside of the machine is too hot. The machine will pause its current print job and go into cooling down mode.	Make sure you can hear the fan in the machine spinning and that the exhaust outlet is not blocked. If the fan is spinning, remove any obstacles that surround the exhaust outlet, and then leave the machine turned on but do not use it for several minutes. If the fan is not spinning, disconnect the machine from the power for several minutes, then reconnect it.
Cover is Open	The front cover is not completely closed.	Open and then firmly close the front cover of the machine.
Cover is Open.	The fuser cover is not completely closed or paper was jammed in the back of the machine when you turned on the power.	Close the fuser cover located inside the back cover of the machine. Make sure paper is not jammed inside the back of the machine, and then close the fuser cover.
Cover is Open.	The ADF cover is not completely closed.	Close the ADF cover. If the error message remains, press ✕.

Error Message	Cause	Action
Disconnected	The other person or other person's fax machine stopped the call.	Try to send or receive again. If calls are stopped repeatedly and you are using a VoIP (Voice over IP) system, try changing the Compatibility to Basic (for VoIP).
Document Jam	The document was not inserted or fed correctly, or the document scanned from the ADF was too long.	Remove the jammed paper from the ADF unit. Clear any debris or scraps of paper from the ADF unit paper path. Press ✕.
DR Mode in Use (Except New Zealand)	The machine is set to Distinctive Ring mode. You cannot change the Receive Mode from Manual to another mode.	Set Distinctive Ring to Off.
Drum !	The corona wire on the drum unit must be cleaned.	Clean the corona wire on the drum unit. 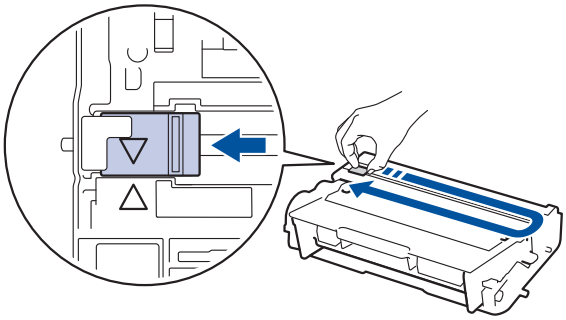 See *Related Information*: *Clean the Corona Wire*. If the problem continues, replace the drum unit with a new one.
	The drum unit or the toner cartridge and drum unit assembly is not installed correctly.	Remove the drum unit, remove the toner cartridge from the drum unit, and put the toner cartridge back into the drum unit. Reinstall the drum unit in the machine.
FaxAbility On (For New Zealand)	The machine is set to Faxability mode. You can not change the Receive Mode from Manual to another mode.	Set FaxAbility to Off.
Jam 2-sided	The paper is jammed in the 2-sided tray or inside the back cover.	Remove the 2-sided tray and open the back cover to pull out all jammed paper.
Jam Inside	The paper is jammed inside the machine.	Open the front cover, remove the toner cartridge and drum unit assembly, and pull out all jammed paper. Close the front cover.
Jam MP Tray	The paper is jammed in the MP tray.	Remove all jammed paper from in and around the MP tray. Press Retry.
Jam Rear	The paper is jammed in the back of the machine.	Open the fuser cover and remove all jammed paper. Close the fuser cover.
Jam Tray 1 Jam Tray 2 Jam Tray 3	The paper is jammed in the indicated paper tray.	Pull out the paper tray and remove all jammed paper as shown in the animation on the LCD.
Limit Exceeded	The print limit set in Secure Function Lock 3.0 was reached.	Call your administrator to check your Secure Function Lock Settings.
Media Type Mismatch	The media type specified in the printer driver differs from the paper type specified in the machine's menu.	Load the correct type of paper in the tray indicated on the LCD, and then select the correct media type in the Paper Type setting on the machine.

Error Message	Cause	Action
No Drum Unit	The drum unit is not installed correctly.	Reinstall the toner cartridge and drum unit assembly.
No HUB Support	A USB hub device is connected to the USB direct interface.	Disconnect the USB hub device from the USB direct interface.
No Paper	The machine is out of paper, or paper is not loaded correctly in the paper tray.	• Refill paper in the paper tray. Make sure the paper guides are set to the correct size. • If paper is in the tray, remove it and load it again. Make sure the paper guides are set to the correct size. • Do not overfill the paper tray.
No Paper Fed T1 No Paper Fed T2 No Paper Fed T3	The machine failed to feed paper from the indicated paper tray.	Pull out the paper tray indicated on the LCD and remove all jammed paper.
No Paper MP	The MP tray is out of paper, or paper is not loaded correctly in the MP tray.	Do one of the following: • Refill paper in the MP tray. Make sure the paper guides are set to the correct size. • If paper is in the tray, remove it and load it again. Make sure the paper guides are set to the correct size.
No Paper No Paper T1 No Paper T2 No Paper T3	The machine failed to feed paper from the indicated paper tray.	Do one of the following: • Refill paper in the paper tray indicated on the LCD. Make sure the paper guides are set to the correct size. • If paper is in the tray, remove it and load it again. Make sure the paper guides are set to the correct size. Do not overfill the paper tray.
No Response/Busy	The number you dialed does not answer or is busy.	Verify the number and try again.
No Toner	The toner cartridge or the toner cartridge and drum unit assembly is not installed correctly.	Remove the toner cartridge and drum unit assembly. Remove the toner cartridge from the drum unit, and reinstall the toner cartridge back in the drum unit. Reinstall the toner cartridge and drum unit assembly back in the machine. If the problem continues, replace the toner cartridge with a new one.
No Tray T1 No Tray T2 No Tray T3	The paper tray is not installed or not installed correctly.	Reinstall the paper tray indicated on the LCD.
Out of Fax Memory	The machine's fax memory is full.	If you are using Fax Preview function, delete unwanted received fax data. If you are using Memory Receive function and are not using fax preview function, print received fax data. To print fax data, press Settings > All Settings > Fax > Print Document.

Error Message	Cause	Action
Out of Memory	The machine's memory is full.	**If a fax-sending or copy operation is in process** Do one of the following: • Press Send Now to send the pages scanned so far. • Press Partial Print to copy the pages scanned so far. • Press Quit or ✕ and wait until the other operations that are in progress finish, and then try again. **If a scan operation is in process** • Split the document into multiple parts. • Reduce the Resolution. • Reduce the File Size. • Select the high compression PDF file type. • Clear faxes from the memory. **If a print operation is in process** Press ✕ and reduce the print resolution.
Output Tray Full	The output paper tray is full.	Remove printed paper from output tray indicated on the LCD.
Paper Low Paper Low T1 Paper Low T2 Paper Low T3	The paper tray is nearly empty.	Refill the paper in the paper tray indicated on the LCD.
Print Data Full	The machine’s memory is full.	Press ✕ and delete the previously stored secure print data.
Print Unable ##	The machine has a mechanical problem.	• Press and hold ⏻ to turn the machine off, wait a few minutes, and then turn it on again. • If the problem continues, contact Brother customer service.
Received Fax ##	An unprinted received fax is waiting to print on the correct size paper.	To print the received fax, load the correct size of paper in the tray indicated on the LCD. Paper sizes available for fax printing are A4, Letter, Legal, Folio, Mexico Legal and India Legal.
Replace Toner	The toner cartridge is at the end of its life. The machine stops all print operations. While memory is available, faxes are stored in the memory.	Replace the toner cartridge with a new one.
Scan Unable	The document is too long for 2-sided scanning.	Press ✕. For 2-sided scanning, use A4 size paper. Other paper must be within the following size: Length: 147.3 to 355.6 mm Width: 105 to 215.9 mm
Scan Unable ##	The machine has a mechanical problem.	• Press and hold ⏻ to turn the machine off, and then turn it on again. • If the problem continues, contact Brother customer service.

Error Message	Cause	Action
Self-Diagnostic	The temperature of the fuser unit does not rise to a specified temperature within the specified time.	Press and hold ⏻ to turn the machine off, wait a few seconds, and then turn it on again. Leave the machine idle for 15 minutes with the power on.
	The fuser unit is too hot.	
Service Error ##	Machine's firmware has a problem.	• Contact Brother customer service.
Size Error	The paper size defined in the printer driver is not supported by the defined tray.	Choose a paper size supported by the defined tray.
Size Error 2-sided	The paper size specified in the machine's paper size setting is not available for automatic 2-sided printing.	Press ✕ (if required). Load the correct size of paper in the tray and set the tray for that paper size.
	The paper in the tray is not the correct size and is not available for automatic 2-sided printing.	Choose a paper size supported by 2-sided printing. (For models without the lever on the 2-sided tray) Paper size available for automatic 2-sided printing is A4. (For models with the lever on the 2-sided tray) Paper sizes available for automatic 2-sided printing are A4, Letter, Legal, Mexico Legal, India Legal and Folio.
Size Mismatch	The paper in the tray is not the correct size.	Load the correct size of paper in the tray indicated on the LCD and set the size of paper for the tray.
Supplies Drum End Soon	The drum unit is near the end of its life.	Order a new drum unit before the LCD displays Replace Drum.
Supplies Prepare New Toner Cartridge.	If the LCD displays this message, you can still print. The toner cartridge is near the end of its life.	Order a new toner cartridge now so a replacement toner cartridge is available when the LCD displays Replace Toner.
Supplies Replace Drum	It is time to replace the drum unit.	Replace the drum unit with a new one.
	The drum unit counter was not reset when a new drum was installed.	Reset the drum unit counter. See the instructions included with the new drum unit.
Too Many Trays	The number of installed Optional Trays exceeds the maximum number.	Reduce the number of Optional Trays.
Touchscreen Initialisation Failed	The touchscreen was pressed before the power on initialisation was completed.	Make sure nothing is touching the touchscreen.
	Debris may be stuck between the lower part of the touchscreen and its frame.	Insert a piece of stiff paper between the lower part of the touchscreen and its frame and slide it back and forth to push out any debris.
Unusable Device	A USB device or USB Flash memory drive that is encrypted or not supported has been connected to the USB direct interface.	Unplug the device from the USB direct interface.

Error Message	Cause	Action
Unusable Device Remove the Device. Turn the power off and back on again.	A defective USB device or a high power consumption USB device has been connected to the USB direct interface.	• Unplug the device from the USB direct interface. • Press and hold ⏻ to turn the machine off, and then turn it on again.
Wrong Paper Size MP Wrong Paper Size T1 Wrong Paper Size T2 Wrong Paper Size T3	The specified tray ran out of paper during copying and the machine could not feed the same size paper from the next priority tray.	Refill the paper in the paper tray.

Related Information

- Troubleshooting
- Transfer Your Faxes or Fax Journal Report
- Replace Supplies
- Load and Print Using the Paper Tray
- Load and Print Using the Multi-purpose Tray (MP Tray)
- Clean the Corona Wire

Transfer Your Faxes or Fax Journal Report

Related Models: MFC-L5700DN/MFC-L5755DW/MFC-L5900DW/MFC-L6700DW/MFC-L6900DW

If the LCD displays:

- `[Print Unable]` ##
- `[Scan Unable]` ##

We recommend transferring your faxes to another fax machine or to your computer.

You can also transfer the Fax Journal report to see if there are any faxes you must transfer.

If there is an error message on the LCD after you transfer the faxes, disconnect your Brother machine from the power source for several minutes, and then reconnect it.

Related Information

- Error and Maintenance Messages
- Transfer Faxes to Another Fax Machine
- Transfer Faxes to Your Computer
- Transfer the Fax Journal Report to Another Fax Machine

Transfer Faxes to Another Fax Machine

Related Models: MFC-L5700DN/MFC-L5755DW/MFC-L5900DW/MFC-L6700DW/MFC-L6900DW

If you have not set up your Station ID, you cannot enter Fax Transfer mode.

1. Press [Settings] > [All Settings] > [Service] > [Data Transfer] > [Fax Transfer].
2. Do one of the following:
   - If the LCD displays [No Data], there are no faxes left in the machine's memory. Press [Close].
   - Enter the fax number to which faxes will be forwarded.
3. Press [Fax Start].

Related Information

- Transfer Your Faxes or Fax Journal Report
- Set Your Station ID

Transfer Faxes to Your Computer

Related Models: MFC-L5700DN/MFC-L5755DW/MFC-L5900DW/MFC-L6700DW/MFC-L6900DW

1. Make sure you have installed the software and drivers on your computer, and then turn on **PC-FAX Receive** on the computer.

   DO one of the following:

   - (Windows XP, Windows Vista and Windows 7)

     From the (**Start**) menu, select **All Programs** > **Brother** > **Brother Utilities**.

     Click the drop-down list and select your model name (if not already selected). Click **PC-FAX** in the left navigation bar, and then click **Receive**.
   - (Windows 8)

     Click (**Brother Utilities**), and then click the drop-down list and select your model name (if not already selected). Click **PC-FAX** in the left navigation bar, and then click **Receive**.
2. Make sure you have set `[PC Fax Receive]` on the machine.

   If faxes are in the machine's memory when you set up PC-Fax Receive, the LCD displays `[Send Fax to PC?]`.
3. Do one of the following:
   - To transfer all faxes to your computer, press `[Yes]`.
   - To exit and leave the faxes in the memory, press `[No]`.
4. Press .

Related Information

- Transfer Your Faxes or Fax Journal Report
- Use PC-Fax Receive to Transfer Received Faxes to Your Computer (Windows only)
- Configure PC-FAX (Windows)

Transfer the Fax Journal Report to Another Fax Machine

Related Models: MFC-L5700DN/MFC-L5755DW/MFC-L5900DW/MFC-L6700DW/MFC-L6900DW

If you have not set up your Station ID, you cannot enter fax transfer mode.

1. Press [Settings] > [All Settings] > [Service] > [Data Transfer] > [Report Transfer].
2. Enter the fax number to which the Fax Journal will be forwarded.
3. Press [Fax Start].

Related Information

- Transfer Your Faxes or Fax Journal Report
- Set Your Station ID

Document Jams

- Document is Jammed in the Top of the ADF Unit
- Document is Jammed under the Document Cover
- Remove Small Scraps of Paper Jammed in the ADF

Document is Jammed in the Top of the ADF Unit

1. Remove any paper from the ADF that is not jammed.
2. Open the ADF cover.
3. Pull the jammed document out to the left. If the document rips or tears, be sure you remove any debris or scraps to prevent future jams.

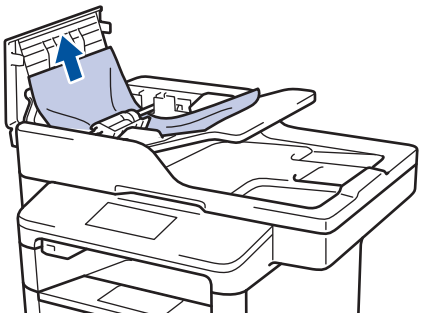

4. Close the ADF cover.
5. Press .

Related Information

- Document Jams

Document is Jammed under the Document Cover

1. Remove any paper from the ADF that is not jammed.
2. Lift the document cover.
3. Pull the jammed document out to the right. If the document rips or tears, be sure you remove any debris or scraps to prevent future jams.

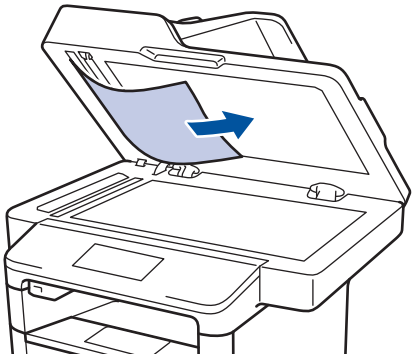

4. Close the document cover.
5. Press .

Related Information

- Document Jams

Remove Small Scraps of Paper Jammed in the ADF

1. Lift the document cover.
2. Insert a piece of stiff paper, such as cardstock, into the ADF to push any small paper scraps through.

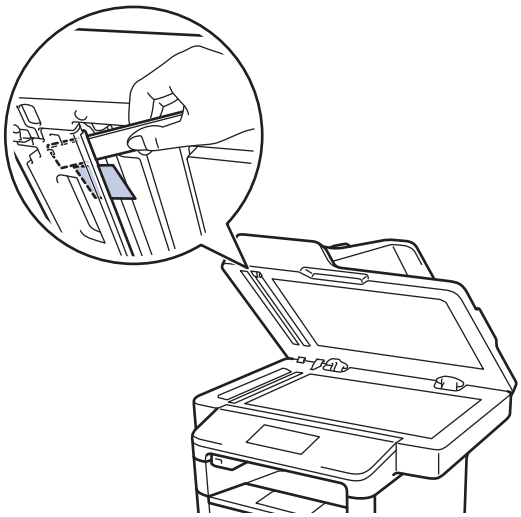

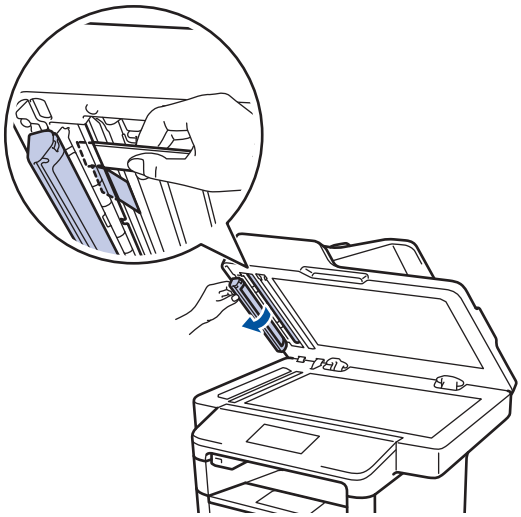

3. Close the document cover.
4. Press .

Related Information

- Document Jams

Paper Jams

Always remove the remaining paper from the paper tray and straighten the stack when you are adding new paper. This helps prevent multiple sheets of paper from feeding through the machine at one time and prevents paper jams.

- Paper is Jammed in the MP tray
- Paper is Jammed in the Paper Tray
- Paper is Jammed in the Back of the Machine
- Paper is Jammed inside the Machine
- Paper is Jammed in the 2-sided Tray

Paper is Jammed in the MP tray

If the machine's control panel or the Status Monitor indicates that there is a jam in the machine's MP tray, follow these steps:

1. Remove the paper from the MP tray.
2. Remove any jammed paper from in and around the MP tray.

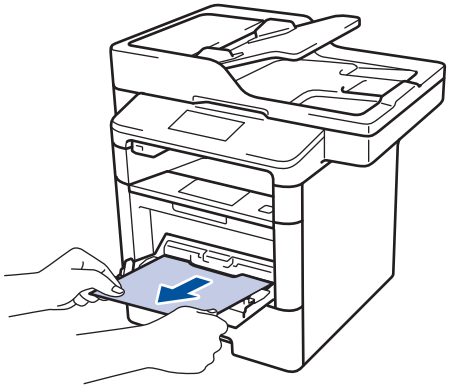

3. Fan the paper stack, and then put it back in the MP tray.
4. Reload paper in the MP tray and make sure the paper stays under the maximum paper height guides (1) on both sides of the tray.

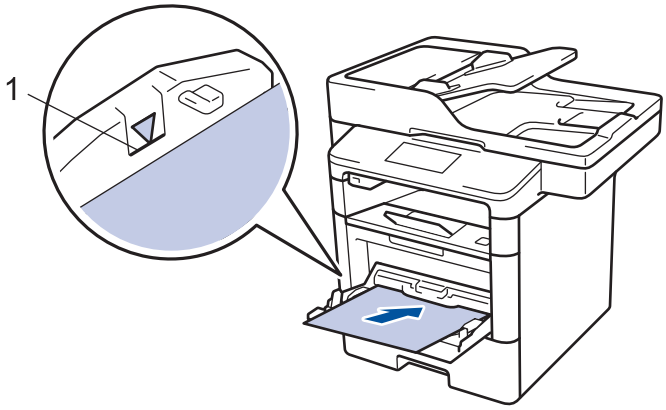

5. Press [Retry] to resume printing.

Related Information

- Paper Jams

Paper is Jammed in the Paper Tray

If the machine's control panel or the Status Monitor indicates that there is a jam in the paper tray, follow these steps:

1. Pull the paper tray completely out of the machine.

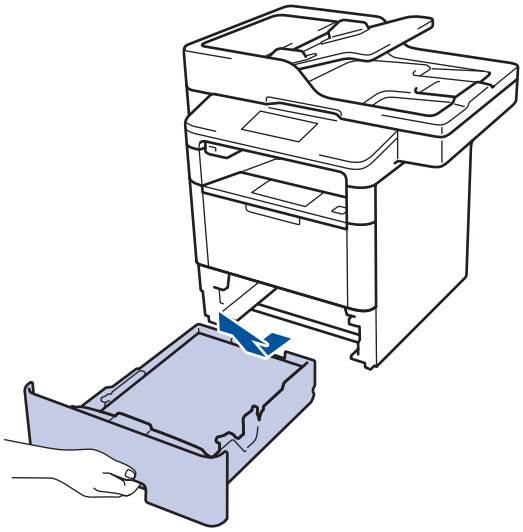

2. Slowly pull out the jammed paper.

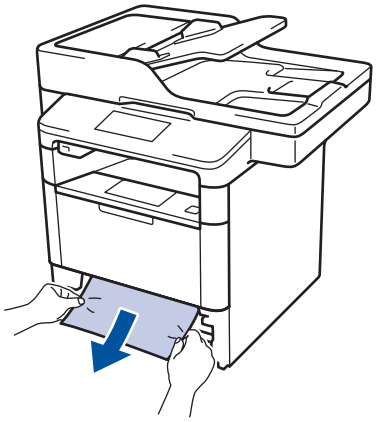

Pulling the jammed paper downward using both hands allows you to remove the paper more easily.

3. Fan the stack of paper to prevent further jams, and slide the paper guides to fit the paper size.

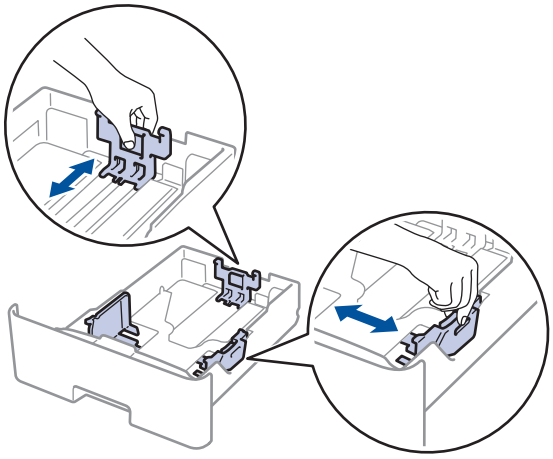

4. Make sure the paper is below the maximum paper mark (▼▼▼).

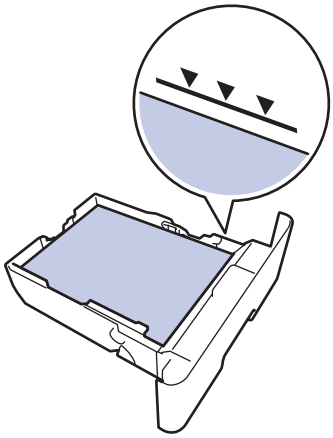

5. Put the paper tray firmly back in the machine.

Related Information

- Paper Jams

Paper is Jammed in the Back of the Machine

If the machine's control panel or the Status Monitor indicates that there is a jam in the back (Rear) of the machine, follow these steps:

1. Leave the machine turned on for 10 minutes for the internal fan to cool the extremely hot parts inside the machine.
2. Open the back cover.

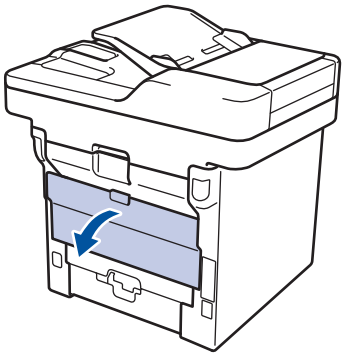

3. Pull the green levers at the left and right sides toward you to release the fuser cover.

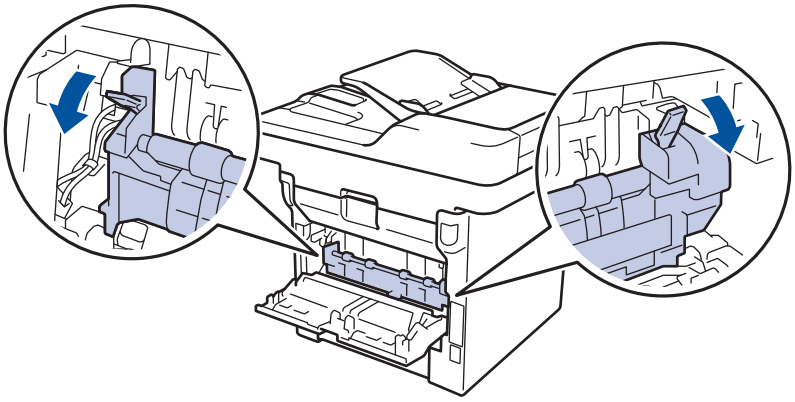

WARNING

HOT SURFACE

The machine's internal parts will be extremely hot. Wait for the machine to cool down before touching them.

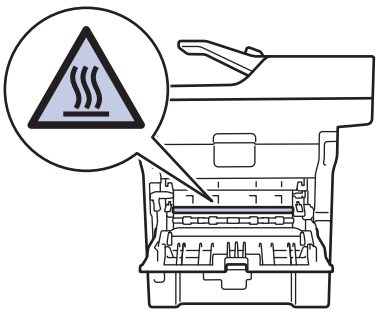

4. Use both hands to gently pull the jammed paper out of the fuser unit.

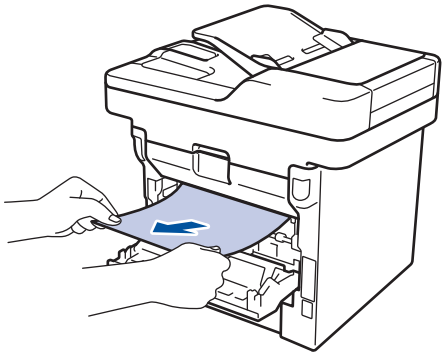

5. Close the fuser cover.

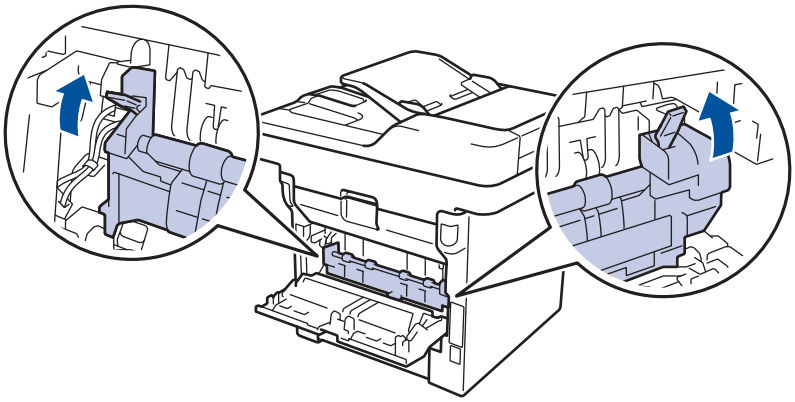

6. Close the back cover until it locks in the closed position.

Related Information

- Paper Jams

Paper is Jammed inside the Machine

If the machine's control panel or the Status Monitor indicates that there is a jam inside the machine, follow these steps:

1. Leave the machine turned on for 10 minutes for the internal fan to cool the extremely hot parts inside the machine.
2. Open the front cover.

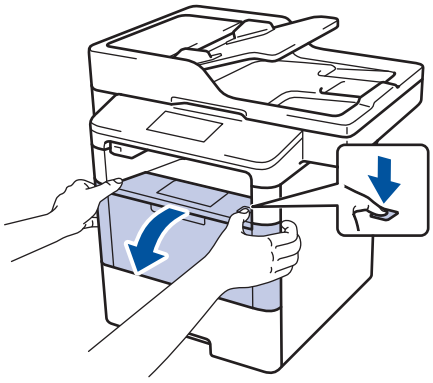

3. Remove the toner cartridge and drum unit assembly.

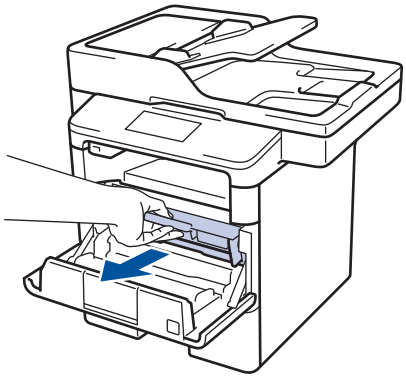

WARNING

HOT SURFACE

The machine's internal parts will be extremely hot. Wait for the machine to cool down before touching them.

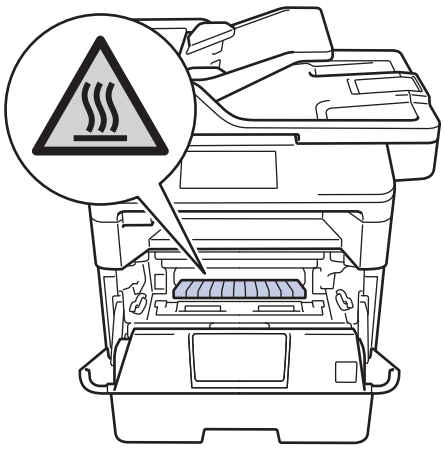

4. Pull out the jammed paper slowly.

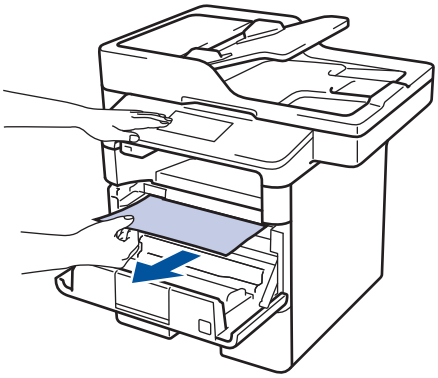

5. Install the toner cartridge and drum unit assembly into the machine.

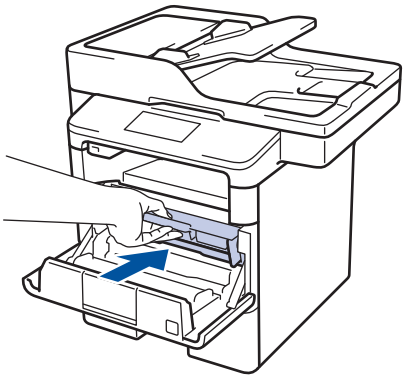

6. Close the front cover.

Related Information

- Paper Jams

Paper is Jammed in the 2-sided Tray

If the machine's control panel or the Status Monitor indicates that there is a jam in the 2-sided paper tray, follow these steps:

1. Leave the machine turned on for 10 minutes for the internal fan to cool the extremely hot parts inside the machine.
2. Pull the paper tray completely out of the machine.

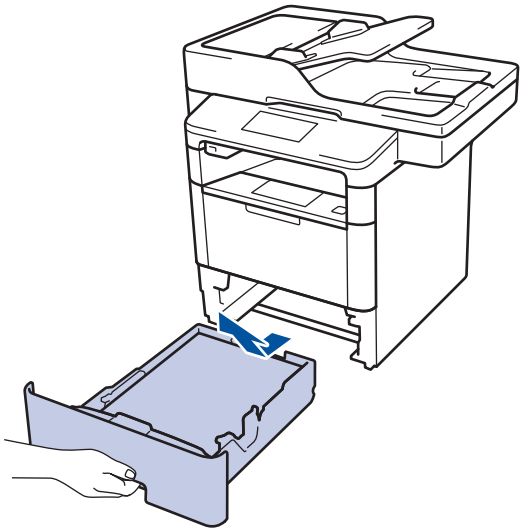

3. At the back of the machine, pull the 2-sided tray completely out of the machine.

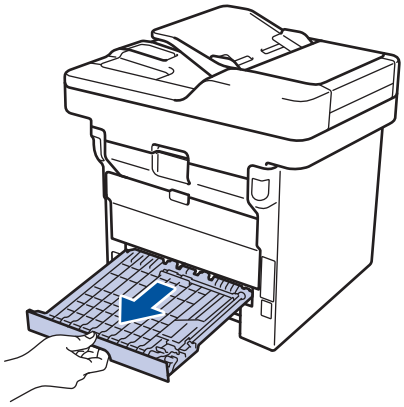

4. Pull the jammed paper out of the machine or out of the 2-sided tray.

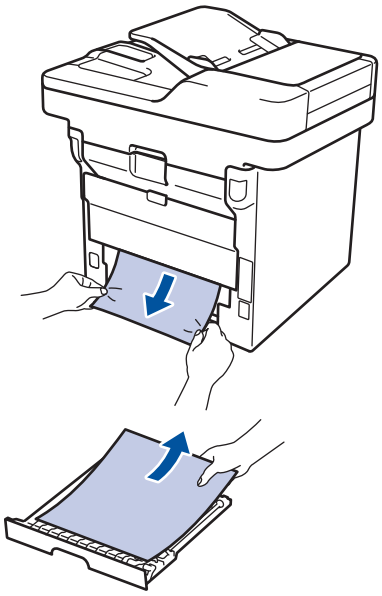

5. Remove paper that may have jammed under the machine due to static electricity.

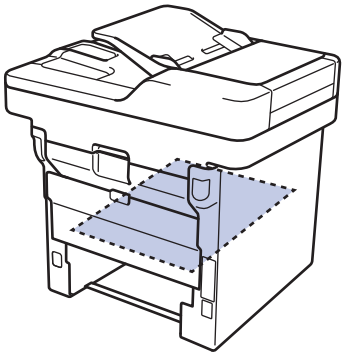

6. If paper is not caught inside the 2-sided tray, open the back cover.

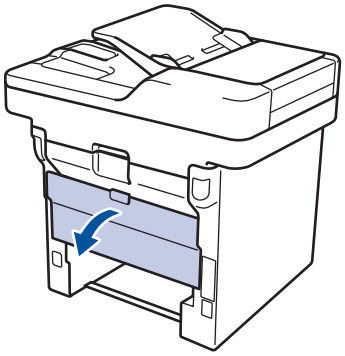

WARNING

HOT SURFACE

The machine's internal parts will be extremely hot. Wait for the machine to cool down before touching them.

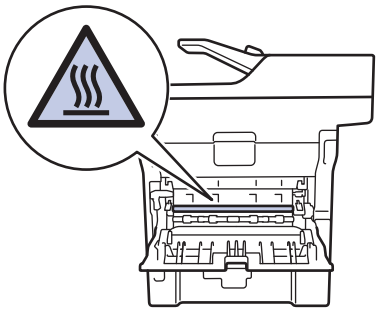

7. Use both hands to gently pull the jammed paper out of the back of the machine.

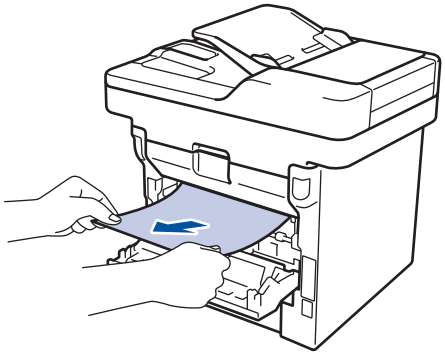

8. Close the back cover until it locks in the closed position.
9. Put the 2-sided tray firmly back in the rear of the machine.
10. Put the paper tray firmly back in the front of the machine.

Related Information

- Paper Jams

Printing Problems

Difficulties	Suggestions
No printout	Check that the correct printer driver has been installed and selected.
	Check to see if the Status Monitor or the machine's control panel displays an error status.
	Check that the machine is online: • Windows7 and Windows Server 2008 R2 Click /**Start** > **Devices and Printers** . Right-click **Brother XXX-XXXX** and click **See what's printing**. Click **Printer** in the menu bar. Make sure **Use Printer Offline** is not selected. • Windows Vista and Windows Server 2008 Click /**Start** > **Control Panel** > **Hardware and Sound** > **Printers**. Right-click **Brother XXX-XXXX**. Make sure **Use Printer Online** is not listed. If it is listed, click this option to set the driver Online. • Windows XP and Windows Server 2003 Click the **Start** > **Printers and Faxes**. Right-click **Brother XXX-XXXX**. Make sure **Use Printer Online** is not listed. If it is listed, click this option to set the driver Online. • Windows 8 and Windows Server 2012 Move your mouse to the lower right corner of your desktop. When the menu bar appears, click **Settings** > **Control Panel**. In the **Hardware and Sound** group, click **View devices and printers**. Right-click the **Brother XXX-XXXX**. Click **See what's printing**. If printer driver options appear, select your printer driver. Click **Printer** in the menu bar and make sure that **Use Printer Offline** is not selected. • Windows Server 2012 R2 Click **Control Panel** on the **Start** screen. In the **Hardware** group, click **View devices and printers**. Right-click the **Brother XXX-XXXX**. Click **See what's printing**. If printer driver options appear, select your printer driver. Click **Printer** in the menu bar and make sure **Use Printer Offline** is not selected.
	Check the machine is not in Power Off mode. If the machine is in Power Off mode, press on the control panel, and then send the print data again.
The machine is not printing or has stopped printing.	Press . The machine will cancel the print job and clear it from the machine's memory. The printout may be incomplete. Send the print data again.
The machine prints unexpectedly or it prints garbage. The headers or footers appear when the document displays on the screen but they do not show up when it is printed.	There is an unprintable area on the top and bottom of the page. Adjust the top and bottom margins in your document to allow for this.
	Press .
	Check the settings in your application to make sure they are set up to work with your machine.

Difficulties	Suggestions
	Confirm that the Brother printer driver is selected in your application's Print window.
The machine prints the first couple of pages correctly, then some pages have missing text.	Check the settings in your application to make sure they are set up to work with your machine.
	Your computer is not recognising the full signal of the machine's input buffer. Make sure you connected the interface cable correctly.
The machine does not print on both sides of the paper even though the printer driver setting is 2-sided and the machine supports automatic 2-sided printing.	(For models without the lever on the 2-sided tray)Check the paper size setting in the printer driver. You must select A4 paper that is 60 to 105 g/m^2. (For models with the lever on the 2-sided tray)Check the paper size setting in the printer driver. You must select A4, Letter, Legal, Folio, Mexico Legal and India Legal paper that is 60 to 105 g/m^2
Print speed is too slow.	Try changing the printer driver setting. The highest resolution needs longer data processing, sending and printing time.
The machine does not feed paper.	If there is paper in the paper tray, make sure it is straight. If the paper is curled, straighten it. Sometimes it is helpful to remove the paper, turn the stack over and put it back in the paper tray.
	Reduce the amount of paper in the paper tray, and then try again.
	Make sure **MP Tray** is not selected for **Paper Source** in the printer driver.
	Clean the paper pick-up rollers.
The machine does not feed paper from the MP tray.	Fan the paper well and put it back in the MP tray firmly.
	Make sure **MP Tray** is selected as **Paper Source** in the printer driver.
The machine does not feed envelopes.	Load envelopes in the MP tray. Your application must be set to print the envelope size you are using. This is usually done in the Page Setup or Document Setup menu of your application.

Related Information

- Troubleshooting
- Monitor the Status of the Machine from Your Computer (Windows)
- Monitor the Status of the Machine from Your Computer (Mac)
- Unscannable and Unprintable Areas
- Cancel a Print Job
- Load and Print Using the Paper Tray
- Clean the Paper Pick-up Rollers
- Load and Print Using the Multi-purpose Tray (MP Tray)

Improve the Print Quality

If you have a print quality problem, print a test page first. If the printout looks good, the problem is probably not the machine. Check the interface cable connections and try printing a different document. If the printout or test page printed from the machine has a quality problem, check the examples of poor print quality in the table and follow the recommendations.

IMPORTANT

Using non-Brother supplies may affect the print quality, hardware performance, and machine reliability.

1. To get the best print quality, we suggest using recommended print media. Make sure you use paper that meets our specifications.
2. Check that the toner cartridge and drum unit are installed correctly.

Examples of poor print quality	Recommendation
Faint	• If the machine indicates Replace Toner status, install a new toner cartridge. • Check the machine's environment. Conditions such as humidity, high temperatures, and so on, may cause this print fault. • If the whole page is too light, Toner Save may be turned on. Turn off Toner Save mode in the machine's menu settings or the printer driver. • Clean the drum unit. • Clean the corona wire on the drum unit. • Replace the toner cartridge with a new toner cartridge. • Replace the drum unit with a new drum unit.
Grey background	• Check the machine's environment. Conditions such as high temperatures and high humidity can increase the amount of background shading. • Clean the drum unit. • Replace the toner cartridge with a new toner cartridge. • Replace the drum unit with a new drum unit.
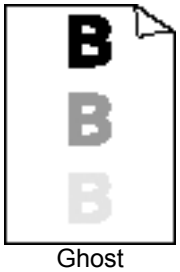 Ghost	• Check the machine's environment. Conditions such as low humidity and low temperatures may cause this print quality problem. • Select the appropriate media type in the printer driver. • Clean the drum unit. • Replace the drum unit with a new drum unit. • Replace the toner cartridge with a new toner cartridge. • The fuser unit may be contaminated. Contact Brother customer service.
Toner specks	• Make sure the media type setting in the driver matches the type of paper you are using. • Clean the drum unit. • The toner cartridge may be damaged. Replace the toner cartridge with a new toner cartridge. • The drum unit may be damaged. Replace the drum unit with a new drum unit. • The fuser unit may be contaminated.

Examples of poor print quality	Recommendation
	Contact Brother customer service.
 Hollow print	• Select **Thick Paper** mode in the printer driver or use thinner paper than you are currently using. • Select the appropriate media type in the menu setting. • Check the machine's environment. Conditions such as high humidity can cause hollow print. • The drum unit may be damaged. Replace the drum unit with a new drum unit.
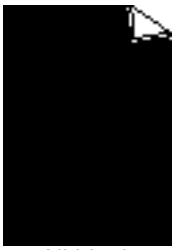 All black	• Clean the corona wire inside the drum unit. • The drum unit may be damaged. Replace the drum unit with a new drum unit.
 White lines across the page	• Select the appropriate media type in the printer driver. • Select the appropriate media type in the menu setting. • The problem may disappear by itself. Print multiple blank pages to clear this problem, especially if the machine has not been used for a long time. • Clean the drum unit. • The drum unit may be damaged. Replace the drum unit with a new drum unit.
 Lines across the page	• Clean the drum unit. • The drum unit may be damaged. Replace the drum unit with a new drum unit.
 White lines, bands or ribbing across the page	• Check the machine's environment. Conditions such as high humidity and high temperatures may cause this print quality problem. • Clean the drum unit. • If the problem is not solved after printing a few pages, replace the drum unit with a new drum unit.
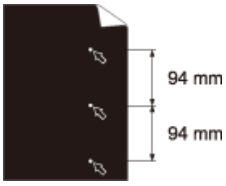 White Spots on black text and graphics at 94 mm intervals 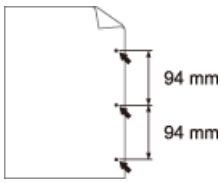 Black spots at 94 mm intervals	• Make 10-15 copies of a blank, white sheet of paper. If the problem is not solved after printing the blank pages, the drum unit may have foreign material, such as glue from a label, stuck on the drum. Clean the drum unit. See *Related Information*:*Clean the Drum Unit.* • The drum unit may be damaged. Replace the drum unit with a new drum unit.

Examples of poor print quality	Recommendation
 Black toner marks across the page	• If you use label sheets for laser printers, the glue from the sheets may sometimes stick to the drum surface. Clean the drum unit. See *Related Information*:*Clean the Drum Unit.* • If you used paper that has clips or staples, the drum unit may be damaged. • If the unpacked drum unit is in direct sunlight (or room light for long periods of time), the unit may be damaged. • Clean the drum unit. • The toner cartridge may be damaged. Replace the toner cartridge with a new toner cartridge. • The drum unit may be damaged. Replace the drum unit with a new drum unit.
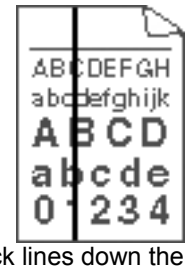 Black lines down the page Printed pages have toner stains down the page	• Clean the corona wire inside the drum unit by sliding the green tab. Make sure that the green tab on the drum unit is in the Home position. • The toner cartridge may be damaged. Replace the toner cartridge with a new toner cartridge. • The drum unit may be damaged. Replace the drum unit with a new drum unit. • The fuser unit may be contaminated. Contact Brother customer service.
 White lines down the page	• Make sure foreign material such as a torn piece of paper, sticky notes or dust is not inside the machine and around the toner cartridge and drum unit. • The toner cartridge may be damaged. Replace the toner cartridge with a new toner cartridge. • The drum unit may be damaged. Replace the drum unit with a new drum unit.
 Image skewed	• Set the document correctly in the ADF or on the scanner glass if the skew only occurs when making copies. • Make sure the paper or other print media is loaded correctly in the paper tray and the guides are not too tight or too loose against the paper stack. • Set the paper guides correctly. • The paper tray may be too full. • Check the paper type and quality. • Check for loose objects such as torn paper inside the machine. • If the problem only occurs during automatic 2-sided printing, check for torn paper in the 2-sided tray. Verify the 2-sided tray is inserted completely and the back cover is closed completely.
	• Check the paper type and quality. High temperatures and high humidity will cause paper to curl. • If you do not use the machine often, the paper may have been in the paper tray too long. Turn over the stack of paper in the paper tray. Also, fan the paper stack, and then rotate the paper 180° in the paper tray.

Examples of poor print quality	Recommendation
Curled or wavy	• Open the back cover (face up output tray) to let the printed paper exit onto the face up output tray. • Choose **Reduce Paper Curl** mode in the printer driver when you do not use our recommended print media.
 Wrinkles or creases	• Make sure paper is loaded correctly. • Check the paper type and quality. • Turn over the stack of paper in the tray or rotate the paper 180° in the input tray.
 Poor fixing	• Make sure the media type setting in the driver matches the type of paper you are using. • Choose **Improve Toner Fixing** mode in the printer driver. If this selection does not provide enough improvement, change the printer driver setting in **Media Type** to a thick setting. If you are printing an envelope, choose **Env. Thick** in the media type setting.
 Envelope creases	• Make sure envelopes are printed with the back cover (face up output tray) opened. • Make sure envelopes are fed only from the MP tray.

Related Information

- Troubleshooting
- Test Print
- Clean the Drum Unit

Telephone and Fax Problems

Related Models: MFC-L5700DN/MFC-L5755DW/MFC-L5900DW/MFC-L6700DW/MFC-L6900DW

Telephone Line or Connections

Difficulties	Suggestions
Dialling does not work. (No dial tone)	Check all line cord connections. Make sure the telephone line cord is plugged into the telephone wall socket and the LINE socket of the machine. Make sure your machine has a dial tone by pressing the Hook button in Fax mode. If you subscribe to DSL or VoIP services, contact your service provider for connection instructions.
	(Available only for some countries.) Change the Tone/Pulse setting.
	Send a manual fax by pressing Hook button, and dialing the number. Wait to hear fax-receiving tones before pressing Start button.
	If there is no dial tone, connect a known working telephone and telephone line cord to the socket. Then lift the external telephone's handset and listen for a dial tone. If there is still no dial tone, ask your telephone company to check the line and/or wall socket.
The machine does not answer when called.	Make sure the machine is in the correct receive mode for your setup. Check for a dial tone. If possible, call your machine to hear it answer. If there is still no answer, check that the telephone line cord is plugged into the telephone wall socket and the LINE socket of the machine. Make sure your machine has a dial tone by pressing the Hook button in Fax mode. If there is no ringing when you call your machine, ask your telephone company to check the line.

Handling Incoming Calls

Difficulties	Suggestions
Sending a Fax Call to the machine.	If you answered on an extension or external telephone, press your Remote Activation Code (the factory setting is *51 (*91 for New Zealand)). If you answered on the external telephone, press the Start button to receive the fax. When your machine answers, hang up.
Custom features on a single line.	If you have Call Waiting, Voice Mail, an answering machine, an alarm system or other custom feature on a single telephone line with your machine, it may create a problem sending or receiving faxes. **For Example:** If you subscribe to Call Waiting or some other custom service and its signal comes through the line while your machine is sending or receiving a fax, the signal can temporarily interrupt or disrupt the faxes. Brother's ECM (Error Correction Mode) feature should help overcome this problem. This condition is related to the telephone system industry and is common to all devices that send and receive information on a single, shared line with custom features. If avoiding a slight interruption is crucial to your business, we recommend using a separate telephone line with no custom features.

Receiving Faxes

Difficulties	Suggestions
Cannot receive a fax.	Check all line cord connections. Make sure the telephone line cord is plugged into the telephone wall socket and the LINE socket of the machine. If you subscribe to DSL or VoIP services, contact your service provider for connection instructions. If you are using a VoIP system, try changing the VoIP setting to *Basic (for VoIP)*. This will lower modem speed and turn off Error Correction Mode (ECM).
	Make sure your machine has a dial tone by pressing the Hook button in Fax mode. If you hear static or interference on your fax line, contact your local telephone provider.

Difficulties	Suggestions
Cannot receive a fax.	Make sure the machine is in the correct Receive Mode. This is determined by the external devices and telephone subscriber services you have on the same line as the Brother machine. • If you have a dedicated fax line and want your Brother machine to automatically answer all incoming faxes, you should select Fax only mode. • If your Brother machine shares a line with an external answering machine, you should select the External TAD mode. In External TAD mode, your Brother machine will receive incoming faxes automatically and voice callers will be able to leave a message on your answering machine. • If your Brother machine shares a line with other telephones and you want it to automatically answer all incoming faxes, you should select the Fax/Tel mode. In Fax/Tel mode, your Brother machine will receive faxes automatically and produce a pseudo/double-ring to alert you to answer voice calls. • If you do not want your Brother machine to answer any incoming faxes automatically, you should select the Manual mode. In Manual mode, you must answer every incoming call and activate the machine to receive faxes.
	Another device or service at your location may be answering the call before your Brother machine answers. To test this, lower the Ring Delay setting: • If the Receive Mode is set to Fax Only or Fax/Tel, reduce the Ring Delay to one ring. • If the Receive Mode is set to External TAD, reduce the number of rings programmed on your answering machine to two. • If the Receive Mode is set to Manual, DO NOT adjust the Ring Delay setting.
	Have someone send you a test fax: • If you received the test fax successfully, your machine is operating correctly. Remember to reset your Ring Delay or answering machine setting back to your original setting. If receiving problems recur after resetting the Ring Delay, then a person, device, or subscriber service is answering the fax call before the machine has a chance to answer. • If you were not able to receive the fax, then another device or subscriber service may be interfering with your fax reception or there may be a problem with your fax line.

	If you are using a telephone answering machine (External TAD mode) on the same line as the Brother machine, make sure your answering machine is set up correctly.
	1. Set your answering machine to answer in one or two rings.
	2. Record the outgoing message on your answering machine.
	  • Record five seconds of silence at the beginning of your outgoing message.
	  • Limit your speaking to 20 seconds.
	  • End your outgoing message with your Remote Activation Code for people sending manual faxes. For example: “After the beep, leave a message or press *51 (*91 for New Zealand) and Start to send a fax.”
	3. Set your answering machine to answer calls.
	4. Set your Brother machine’s Receive Mode to External TAD.

	Make sure your Brother machine’s Fax Detect feature is turned On. Fax Detect is a feature that allows you to receive a fax even if you answered the call on an external or extension telephone.
	If you often get transmission errors due to possible interference on the telephone line or if you are using a VoIP system, try changing the Compatibility setting to *Basic(for VoIP)*.
	Contact your administrator to check your Secure Function Lock Settings.

Sending Faxes

Difficulties	Suggestions
Cannot send a fax.	Check all line cord connections. Make sure the telephone line cord is plugged into the telephone wall socket and the LINE socket of the machine. Make sure your machine has a dial tone by pressing the Hook button in Fax mode. If you subscribe to DSL or VoIP services, contact your service provider for connection instructions.
	Make sure you pressed Fax and the machine is in Fax mode.
	Print the Transmission Verification Report and check for an error.
	Contact your administrator to check your Secure Function Lock Settings.

Difficulties	Suggestions
Cannot send a fax.	Ask the other party to check that the receiving machine has paper.
Poor sending quality.	Try changing your resolution to Fine or S.Fine. Make a copy to check your machine's scanner operation. If the copy quality is poor, clean the scanner.
Transmission Verification Report says RESULT:ERROR.	There is probably temporary noise or static on the line. Try sending the fax again. If you are sending a PC-Fax message and get RESULT:ERROR on the Transmission Verification Report, your machine may be out of memory. To free up extra memory, you can turn off Fax Storage, print fax messages in memory or cancel a delayed fax. If the problem continues, ask the telephone company to check your telephone line.
	If you often get transmission errors due to possible interference on the telephone line or if you are using a VoIP system, try changing the Compatibility setting to Basic(for VoIP).
Sent faxes are blank.	Make sure you are loading the document correctly. When using the ADF, the document should be face up. When using the scanner glass, the document should be face down.
Vertical black lines when sending.	Black vertical lines on faxes you send are typically caused by dirt or correction fluid on the glass strip. Clean the glass strip.

Printing received faxes

Difficulties	Suggestions
• Condensed print • Horizontal streaks • Top and bottom sentences are cut off • Missing lines 	This is usually caused by a poor telephone connection. Make a copy; if your copy looks good, you probably had a bad connection, with static or interference on the telephone line. Ask the other party to send the fax again.
Vertical black lines when receiving	The corona wire for printing may be dirty. Clean the corona wire in the drum unit.
	The sender's scanner may be dirty. Ask the sender to make a copy to see if the problem is with the sending machine. Try receiving from another fax machine.
Received faxes appear as split or blank pages.	Left and right margins are cut off or a single page is printed on two pages.
	Turn on Auto Reduction.

Related Information

- Troubleshooting
- Set Dial Tone Detection
- Set Telephone Line Compatibility for Interference and VoIP Systems
- Clean the Scanner
- Set the Number of Rings Before the Machine Answers (Ring Delay)
- Choose the Correct Receive Mode

Set Dial Tone Detection

Related Models: MFC-L5700DN/MFC-L5755DW/MFC-L5900DW/MFC-L6700DW/MFC-L6900DW

Setting the Dial Tone to [Detection] will shorten the Dial Tone detect pause.

1. Press [Settings] > [All Settings] > [Initial Setup] > [Dial Tone].
2. Press [Detection] or [No Detection]
3. Press .

Related Information

- Telephone and Fax Problems

Set Telephone Line Compatibility for Interference and VoIP Systems

Related Models: MFC-L5700DN/MFC-L5755DW/MFC-L5900DW/MFC-L6700DW/MFC-L6900DW

Problems sending and receiving faxes due to possible interference on the telephone line may be solved by reducing the modem speed to minimise errors in fax transmission. If you are using a Voice over IP (VoIP) service, Brother recommends changing the compatibility to Basic (for VoIP).

- VoIP is a type of phone system that uses an Internet connection, rather than a traditional phone line.
- Telephone providers frequently bundle VoIP together with Internet and cable services.
- Brother does not recommend the use of a VoIP line. VoIP limitations in general can cause some functions of the fax machine not to work correctly.

1. Press [Settings] > [All Settings] > [Initial Setup] > [Compatibility].
2. Press the option you want.
   - Select [High] to set the modem speed to 33600 bps.
   - Select [Normal] to set the modem speed to 14400 bps.
   - Select [Basic(for VoIP)] to reduce the modem speed to 9600 bps and turn off Error Correction Mode (ECM). Unless interference is a recurring problem on your telephone line, you may prefer to use this option only when needed.
3. Press .

Related Information

- Telephone and Fax Problems

Network Problems

- Error Messages
- Use the Network Connection Repair Tool (Windows)
- Where Can I Find My Brother Machine's Network Settings?
- I Cannot Complete the Wireless Network Setup Configuration
- My Brother Machine Cannot Print, Scan, or PC-FAX Receive over the Network
- I Want to Check that My Network Devices are Working Correctly

Error Messages

Your Brother machine will display an error message if an error occurs. The most common error messages are shown in the table.

Error Messages	Cause	Action
The maximum number of devices are already connected using Wi-Fi Direct.	Two mobile devices are already connected to the Wi-Fi Direct network when the Brother machine is the Group Owner (G/O).	After the current connection between your Brother machine and another mobile device has shut down, try to configure the Wi-Fi Direct settings again. You can confirm the connection status by printing the Network Configuration Report.
Authentication Error, contact your administrator.	Your authentication setting for the Store Print Log to Network feature is not correct.	• Make sure the **Username** and **Password** in **Authentication Setting** are correct. If the username is part of a domain, enter the username in one of the following styles: user@domain or domain\user. • Make sure the time of the log file server matches the time from the SNTP server, or the **Date&Time** settings. • Make sure the SNTP time server settings are configured correctly so the time matches the time used for authentication by Kerberos or NTLMv2. If there is no SNTP server, make sure the **Date&Time** and **Time Zone** settings are set correctly using Web Based Management or the control panel so the machine matches the time being used by the server providing the authentication.
Check User ID and Password.	The Kerberos Authentication error.	Make sure you have entered a correct user name and a password for the Kerberos server. For more information on the Kerberos server settings, contact your network administrator.
	The date, time and time zone settings of the Brother machine are not correct.	Confirm your machine's date, time and time zone settings.
	The DNS server configuration is not correct.	Contact your network administrator for the information on the DNS server settings.
	The Brother machine cannot connect to the Kerberos server.	Contact your network administrator for the information on the Kerberos server settings.
Connection Error	Other devices are trying to connect to the Wi-Fi Direct network at the same time.	• Make sure there are no other devices trying to connect to the Wi-Fi Direct network, and then try to configure the Wi-Fi Direct settings again.
Connection Failed	The Brother machine and your mobile device cannot communicate during the Wi-Fi Direct network configuration.	• Move the mobile device closer to your Brother machine. • Move your Brother machine and the mobile device to an obstruction-free area. • If you are using the PIN Method of WPS, make sure you have entered the correct PIN.
File Access Error, contact your administrator.	The Brother machine cannot access the destination folder for the Store Print Log to Network feature.	• Make sure the stored directory name is correct. • Make sure the stored directory is write-enabled. • Make sure the file is not locked.
	In Web Based Management, you have selected the **Cancel Print** option in the **Error Detection Setting** of **Store Print Log to Network**.	Wait for about 120 seconds until this message disappears from the LCD.

Error Messages	Cause	Action
No Device	When configuring the Wi-Fi Direct network, the Brother machine cannot find your mobile device.	• Make sure your machine and mobile device are in the Wi-Fi Direct mode. • Move the mobile device closer to your Brother machine. • Move your Brother machine and the mobile device to an obstruction-free area. • If you are manually configuring the Wi-Fi Direct network, make sure you have entered the correct password. • If your mobile device has a configuration page for how to obtain an IP address, make sure the IP address of your mobile device has been configured via DHCP.
Server Timeout, contact your administrator.	The Brother machine cannot connect to the server for the Store Print Log to Network feature.	• Make sure your server address is correct. • Make sure your server is connected to the network. • Make sure the machine is connected to the network.
Server Timeout	The Brother machine cannot connect to the LDAP server.	• Make sure your server address is correct. • Make sure your server is connected to the network. • Make sure the machine is connected to the network.
	The Brother machine cannot connect to the Active Directory server.	• Make sure your server address is correct. • Make sure your server is connected to the network. • Make sure the machine is connected to the network.
Wrong Date&Time, contact your administrator.	The Brother machine does not obtain the time from the SNTP time server or you have not configured the Date&Time for the machine.	• Make sure the settings to access the SNTP time server are configured correctly in Web Based Management. • Confirm the **Date&Time** settings of your machine are correct in Web Based Management.
Internal Error	The Brother machine's LDAP protocol is disabled.	Confirm your authentication method, and then enable the necessary protocol setting in the Web Based Management.
	The Brother machine's CIFS protocol is disabled.	

Related Information

- Network Problems

Use the Network Connection Repair Tool (Windows)

Use the Network Connection Repair Tool to fix the Brother machine's network settings. It will assign the correct IP address and Subnet Mask.

- (Windows XP/XP Professional x64 Edition/Windows Vista/Windows 7/Windows 8)
  You must log on with Administrator rights.
- Make sure the Brother machine is turned on and is connected to the same network as your computer.

1. Do one of the following:

Option	Description
Windows XP	Click **Start** > **All Programs** > **Accessories** > **Windows Explorer** > **My Computer**.
Windows Vista/ Windows 7	Click **(Start)** > **Computer**.
Windows 8	Click the **(File Explorer)** icon on the taskbar, and then click **Computer** (**This PC**) in the left navigation bar.

2. Double-click **XXX(C:)** (where XXX is the name of your local disk drive) > **Program Files** > **Browny02** > **Brother** > **BrotherNetTool.exe**.

- For 64-bit OS users, double-click **XXX(C:)** (where XXX is the name of your local disk drive) > **Program Files (x86)** > **Browny02** > **Brother** > **BrotherNetTool.exe**.
- If the **User Account Control** screen appears, do one of the following:
  - (Windows Vista) Click **Allow**.
  - (Windows 7/Windows 8) Click **Yes**.

3. Follow the on-screen instructions.
4. Check the diagnosis by printing the Network Configuration Report.

The Network Connection Repair Tool will start automatically if you select the **Enable Connection Repair Tool** option in the Status Monitor. Right-click the Status Monitor screen, and then click **Other Settings** > **Enable Connection Repair Tool**. This is not recommended when your network administrator has set the IP address to Static, since it will automatically change the IP address.

If the correct IP address and the Subnet Mask are still not assigned even after using the Network Connection Repair Tool, ask your network administrator for this information.

Related Information

- Network Problems
- Print the Network Configuration Report
- My Brother Machine Cannot Print, Scan, or PC-FAX Receive over the Network
- I Want to Check that My Network Devices are Working Correctly

Where Can I Find My Brother Machine's Network Settings?

- Print the Network Configuration Report
- Change Machine Settings from Your Computer

I Cannot Complete the Wireless Network Setup Configuration

Related Models: MFC-L5755DW/MFC-L5900DW/MFC-L6700DW/MFC-L6900DW

Turn your wireless router off and back on. Then try to configure the wireless settings again. If you are unable to resolve the problem, follow the instructions below:

Investigate the problem using the WLAN Report.

Cause	Action	Interface
Your security settings (SSID/ Network Key) are not correct.	• Confirm the security settings using the Wireless Setup Helper utility. For more information and to download the utility, go to your model's **Downloads** page on the Brother Solutions Center at support.brother.com. • Select and confirm that you are using the correct security settings. - See the instructions supplied with your wireless LAN access point/router for information on how to find the security settings. - The manufacturer's name or model number of the wireless LAN access point/router may be used as the default security settings. - Consult with the access point/router manufacturer, your Internet provider, or network administrator. • For definitions of SSID and Network Key, see the entries SSID, Network Key and Channels in the Glossary.	Wireless
Your Brother machine's MAC address is not allowed.	Confirm that the Brother machine's MAC Address is allowed in the filter. You can find the MAC Address on your Brother machine's control panel.	Wireless
Your wireless LAN access point/router is in stealth mode (not broadcasting the SSID).	• Enter the correct SSID name or Network Key manually. • Check the SSID name or the Network Key in the instructions supplied with your wireless LAN access point/router and reconfigure the wireless network setup.	Wireless
Your security settings (SSID/ password) are not correct.	• Confirm the SSID and password. - When you are configuring the network manually, the SSID and password are displayed on your Brother machine. If your mobile device supports the manual configuration, the SSID and password will be displayed on your mobile device's screen. • For the definition of SSID, see the Glossary.	Wi-Fi Direct
You are using Android™ 4.0.	If your mobile device disconnects (approximately six minutes after using Wi-Fi Direct), try the one-push configuration using WPS (recommended) and set the Brother machine as a G/O.	Wi-Fi Direct
Your Brother machine is placed too far from your mobile device.	Move your Brother machine within about 3.3 feet (1 metre) of the mobile device when you configure the Wi-Fi Direct network settings.	Wi-Fi Direct
There are some obstructions (walls or furniture, for example) between your machine and the mobile device.	Move your Brother machine to an obstruction-free area.	Wi-Fi Direct
There is a wireless computer, Bluetooth-supported device, microwave oven, or digital	Move other devices away from the Brother machine or the mobile device.	Wi-Fi Direct

Cause	Action	Interface
cordless phone near the Brother machine or the mobile device.		
If you have checked and tried all of the above, but still cannot complete the Wi-Fi Direct configuration, do the following:	• Turn your Brother machine off and back on. Then try to configure the Wi-Fi Direct settings again. • If you are using your Brother machine as a client, confirm how many devices are allowed in the current Wi-Fi Direct network, and then check how many devices are connected.	Wi-Fi Direct

For Windows

If your wireless connection has been interrupted, and you have checked and tried all of the above, we recommend using the Network Connection Repair Tool.

Related Information

- Network Problems
- Configure Your Machine for a Wireless Network When the SSID Is Not Broadcast
- Use Wi-Fi Direct®

My Brother Machine Cannot Print, Scan, or PC-FAX Receive over the Network

Cause	Action	Interface
Your security software blocks your machine's access to the network. (The Network scanning feature does not work.)	• (Windows) Configure the third-party Security/Firewall Software to allow Network scanning. To add port 54925 for Network scanning, type the information below: - In **Name**: Type any description, for example Brother NetScan. - In **Port number**: Type 54925. - In **Protocol**: UDP is selected. See the instruction manual that came with your third-party Security/Firewall Software or contact the software manufacturer. • (Mac) Launch ControlCenter2. Click the **Model** pop-up menu, and then select **Other...**. The **Device Selector** window appears. Reselect your network machine, make sure **Status** is **idle**, and then click **OK**.	Wired/Wireless
Your security software blocks your machine's access to the network. (The network PC-Fax Receive feature does not work.) (Windows)	Set the third-party Security/Firewall Software to allow PC-FAX Rx. To add port 54926 for Network PC-FAX Rx, type the information below: • In **Name**: Type any description, for example Brother PC-FAX Rx. • In **Port number**: Type 54926. • In **Protocol**: UDP is selected. See the instruction manual that came with your third-party Security/Firewall Software or contact the software manufacturer.	Wired/Wireless
Your security software blocks your machine's access to the network.	Some security software might block access without showing a security alert dialog box even after successful installation. To allow access, see the instructions for your security software or ask the software manufacturer.	Wired/Wireless
Your Brother machine was not assigned an available IP address.	• Confirm the IP address and the Subnet Mask. Verify that both the IP addresses and Subnet Masks of your computer and the Brother machine are correct and located on the same network. For more information about how to verify the IP address and the Subnet Mask, ask your network administrator. • (Windows) Confirm the IP address and the Subnet Mask using the Network Connection Repair Tool.	Wired/Wireless
The failed print job is still in your computer's print queue.	• If the failed print job is still in your computer's print queue, delete it. • Otherwise, double-click the printer icon in the following folder and cancel all documents: - (Windows XP/Windows Server 2003) Click **Start** > **Printers and Faxes**. - (Windows Vista)	Wired/Wireless

Cause	Action	Interface
	Click (Start) > **Control Panel** > **Hardware and Sound** > **Printers**. - (Windows 7) Click (Start) > **Devices and Printers** > **Printers and Faxes**. - (Windows 8) Move your mouse to the lower right corner of your desktop. When the menu bar appears, click **Settings** > **Control Panel**. In the **Hardware and Sound** group, click **View devices and printers** > **Printers**. - (Windows Server 2008) Click **Start** > **Control Panel** > **Printers**. - (Windows Server 2012) Move your mouse to the lower right corner of your desktop. When the menu bar appears, click **Settings** > **Control Panel**. In the **Hardware** group, click **View devices and printers** > **Printers**. - (Windows Server 2012 R2) Click **Control Panel** on the **Start** screen. In the **Hardware** group, click **View devices and printers**. - (OS X v10.8.5) Click **System Preferences** > **Print & Scan**. - (OS X v10.9.x, 10.10.x) Click **System Preferences** > **Printers & Scanners**.	
Your Brother machine is not connected to the wireless network.	Print the WLAN Report to check the error code on the printed report.	Wireless

If you have checked and tried all of the above, but your Brother machine still cannot print and scan, uninstall the Brother software and drivers and reinstall them.

Related Information

- Network Problems
- Print the WLAN Report
- Wireless LAN Report Error Codes
- Use the Network Connection Repair Tool (Windows)
- I Want to Check that My Network Devices are Working Correctly

I Want to Check that My Network Devices are Working Correctly

Check	Action	Interface
Check that your Brother machine, access point/ router, or network hub is turned on.	**Check the following:** • The power cord is connected correctly and the Brother machine is turned on. • The access point/router or hub is turned on and its link button is blinking. • All protective packaging has been removed from the machine. • The toner cartridge and drum unit are installed correctly. • The front and back covers are fully closed. • Paper is inserted correctly in the paper tray. • (For wired networks) A network cable is securely connected to the Brother machine and to the router or hub.	Wired/Wireless
Check the **Link Status** in the Network Configuration Report.	Print the Network Configuration Report and check that **Ethernet Link Status** or **Wireless Link Status** is **Link OK**.	Wired/Wireless
Check that you can "ping" the Brother machine from your computer.	Ping the Brother machine from your computer using the IP address or the node name in the Windows command prompt or Mac Terminal application: ping `<ipaddress>` or `<nodename>`. • Successful: Your Brother machine is working correctly and connected to the same network as your computer. • Unsuccessful: Your Brother machine is not connected to the same network as your computer. (Windows) Ask the network administrator and use the Network Connection Repair Tool to fix the IP address and the subnet mask. (Mac) Confirm that the IP address and the Subnet Mask are set correctly.	Wired/Wireless
Check that your Brother machine is connected to the wireless network.	Print the WLAN Report to check the error code on the printed report.	Wireless

If you have checked and tried all of the above but you are still having problems, see the instructions supplied with your wireless LAN access point/router to find the SSID and the Network Key information and set them correctly.

Related Information

- Network Problems
- Print the Network Configuration Report
- Print the WLAN Report
- Wireless LAN Report Error Codes
- Use the Network Connection Repair Tool (Windows)
- My Brother Machine Cannot Print, Scan, or PC-FAX Receive over the Network

Other Problems

Difficulties	Suggestions
The machine will not turn on.	Adverse conditions on the power connection (such as lightning or a power surge) may have triggered the machine's internal safety mechanisms. Unplug the power cord. Wait for ten minutes, then plug in the power cord and press ⏻ to turn on the machine. If the problem is not solved and you are using a power breaker, disconnect it to make sure it is not the problem. Plug the machine's power cord directly into a different known working wall electrical socket. If there is still no power, try a different power cable.
The machine cannot print EPS data that includes binary with the BR-Script3 printer driver.	**(Windows)** To print EPS data, do the following: 1. For Windows 7 and Windows Server 2008 R2: Click the (**Start**) button > **Devices and Printers**. For Windows Vista and Windows Server 2008: Click the (**Start**) button > **Control Panel** > **Hardware and Sound** > **Printers**. For Windows XP and Windows Server 2003: Click the **Start** button > **Printers and Faxes**. For Windows 8 and Windows Server 2012: Move your mouse to the lower right corner of your desktop. When the menu bar appears, click **Settings** > **Control Panel**. In the **Hardware and Sound** [1] group, click **View devices and printers**. For Windows Server 2012 R2: Click **Control Panel** on the **Start** screen. In the **Hardware** group, click **View devices and printers**. 2. Right-click the **Brother XXX-XXXX BR-Script3** icon, select **Printer properties**. 3. From the **Device Settings** tab, choose TBCP (Tagged binary communication protocol) in **Output Protocol**. **(Mac)** If your machine is connected to a computer with a USB interface, you cannot print EPS data that includes binary. You can print the EPS data at the machine through a network. For help installing the BR-Script3 printer driver through the network, go to the Brother Solutions Center at support.brother.com.
The Brother software cannot be installed.	**(Windows)** If the Security Software warning appears on the computer screen during the installation, change the Security Software settings to permit the Brother product setup program or other program to run. **(Mac)** If you are using a firewall function of anti-spyware or antivirus security software, temporarily disable it and then install the Brother software.

[1] For Windows Server 2012: **Hardware and Sound**

Copying difficulties

Difficulties	Suggestions
Cannot make a copy.	Make sure you pressed Copy and the machine is in Copy mode.
	Contact your administrator to check your Secure Function Lock Settings.
Vertical black line appears in copies.	Black vertical lines on copies are typically caused by dirt or correction fluid on the glass strip, or the corona wire is dirty. Clean the glass strip and scanner glass and the white bar and white plastic above them.
Copies are blank.	Make sure you are loading the document correctly.

Scanning difficulties

Difficulties	Suggestions
TWAIN or WIA errors appear when starting to scan. (Windows)	Make sure the Brother TWAIN or WIA driver is selected as the primary source in your scanning application. For example, in Nuance™ PaperPort™ 14SE, click **Desktop** > **Scan Settings** > **Select** to choose the Brother TWAIN/WIA driver.
TWAIN or ICA errors appear when starting to scan. (Mac)	Make sure the Brother TWAIN driver is selected as the primary source.
OCR does not work.	Try increasing the scanning resolution. • (Mac users) (PageManager users) Make sure you downloaded and installed Presto! PageManager from http://nj.newsoft.com.tw/download/brother/PM9SEInstaller_BR_multilang2.dmg.
Cannot scan.	Contact your administrator to check your Secure Function Lock Settings.

Software difficulties

Difficulties	Suggestions
Cannot install software or print.	(Windows) Run the install program again. This program will repair and reinstall the software.

Related Information

- Troubleshooting
- Clean the Scanner

Check the Machine Information

Follow these instructions to check your Brother machine's serial number and firmware version.

1. Press [Settings] > [All Settings] > [Machine Info.].
2. Press one of the following options:

Option	Description
Serial No.	Check your machine's serial number.
Firmware Version	Check your machine's firmware version.
Page Counter	Check the number of total pages the machine has printed.
Parts Life	Check the percentage of the supplies' life that remains available.

3. Press .

Related Information

- Troubleshooting

Reset Your Brother Machine

1. Press [Settings] > [All Settings] > [Initial Setup] > [Reset].
2. Swipe up or down or press ▲ or ▼ to display the type of reset functions, and then press the reset function you want to use.
3. [Machine will reboot after resetting. Press [OK] for 2 seconds to confirm.] appears. Press [OK] for two seconds to confirm.

   The machine will restart.
4. Press .

You can also reset the Network settings by pressing [Settings] > [All Settings] > [Network] > [Network Reset].

Related Information

- Troubleshooting
- Reset Functions Overview

Reset Functions Overview

The following reset functions are available:

Unplug the interface cable before you choose Network Settings Reset function, All Settings Reset function or Factory Reset function.

1. Machine Reset

   Reset all the machine's settings that you have changed, such as Date and Time and Ring Delay.

   The Address Book, fax reports, and Call history will remain. (For MFC Models)
2. Network Settings Reset (For Network Models)

   Reset the print server back to its default factory settings (includes Password and IP Address information).
3. Address Book and Fax Settings Reset (For MFC Models)

   This function resets the following settings:
   - Address Book

     (Addresses and Groups)
   - Programmed fax jobs in the memory

     (Delayed Fax)
   - Station ID

     (name and number)
   - Coverpage Message
   - Fax receive settings

     (Remote Access Code, Fax Storage, Fax Forwarding, and PC-Fax Receive (Windows only))
   - Report

     (Transmission Verification Report / Tel Index List / Fax Journal)
   - Setting Lock password
4. All Settings Reset

   Reset all the machine's settings back to the settings that were set at the factory.

   All Settings Reset takes less time than Factory Reset.
5. Factory Reset

   Use the Settings Reset function to reset all machine's settings to the settings originally set at the factory.

   Factory Reset takes more time than All Settings Reset.

   Brother strongly recommends you perform this operation when you dispose of the machine.

Unplug the interface cable before you choose Network Settings Reset function, All Settings Reset function or Factory Reset function.

Related Information

- Reset Your Brother Machine

Routine Maintenance

- Replace Supplies
- Clean the Machine
- Check the Remaining Life of Parts
- Pack and Ship Your Machine
- Replace Periodic Maintenance Parts

Replace Supplies

You must replace supplies when the machine indicates that the life of the supply is over.

Using non-Brother supplies may affect the print quality, hardware performance, and machine reliability.

- The toner cartridge and drum unit are two separate supplies. Make sure both are installed as an assembly.
- The model name of supplies may vary depending on the country.

This table lists the messages to replace supplies when they reach their end of life. To avoid any inconvenience, you may want to buy spare supplies to keep as replacements before the machine stops printing.

Indication	Supply	Model Name	Approximate Life
Toner Low Replace Toner	Toner cartridge 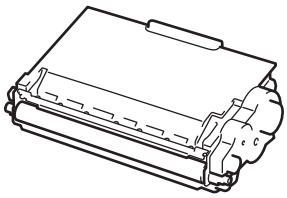	(For Australia) TN-3420 [1] TN-3440 [2] TN-3470 [3] TN-3490 [4] (For New Zealand) TN-3415 [1] TN-3425 [2] TN-3465 [3] TN-3475 [4] (For Other countries) TN-3428 [1] TN-3448 [2] TN-3478 [3] TN-3498 [4]	Approximately 3,000 pages [1 5 6] Approximately 8,000 pages [2 5 6] Approximately 12,000 pages [3 5 6] Approximately 20,000 pages [4 5 6]
Drum ! Drum End Soon Replace Drum	Drum unit 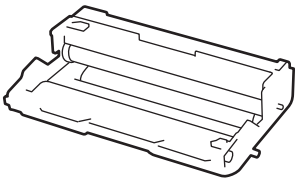	(For Australia) DR-3425 (For New Zealand) DR-3415 (For Other countries) DR-3455	Approximately 30,000 pages/50,000 pages [7]

1 Standard toner cartridge
2 High yield toner cartridge
3 Super high yield toner cartridge(Available only for certain models)
4 Ultra high yield toner cartridge(Available only for certain models)
5 A4 or Letter size 1-sided pages.
6 Approximate cartridge yield is declared in accordance with ISO/IEC 19752.
7 Approximately 30,000 pages based on 1 page per job and 50,000 pages based on 3 pages per job [A4/letter simplex pages]. The number of pages may be affected due to a variety of factors including but not limited to media type and media size.

NOTE

- Availability of toner cartridges differs from one country to another. Go to the Brother Solutions Center at support.brother.com or contact your local Brother office for further details.
- Be sure to seal up the used supplies tightly in a bag so that toner powder does not spill out of the cartridge.

- Discard used consumable items according to local regulations, keeping it separate from domestic waste. If you have questions, call your local waste disposal office. Be sure to reseal the consumable items tightly so that the material inside does not spill.
- We recommend placing used supplies on a piece of paper to prevent accidentally spilling or scattering the material inside.
- If you use paper that is not a direct equivalent for the recommended print media, the life of supplies and machine parts may be reduced.
- The projected life for each of the toner cartridges is based on ISO/IEC 19752. Frequency of replacement will vary depending on the print volume, percentage of coverage, types of media used, and powering on/off the machine.
- Frequency of replacing supplies except toner cartridges will vary depending on the print volume, types of media used, and powering on/off the machine.
- Handle the toner cartridge carefully. If toner scatters on your hands or clothes, immediately wipe or wash it off with cold water.
- To avoid print quality problems, DO NOT touch the shaded parts shown in the illustrations.

Toner cartridge

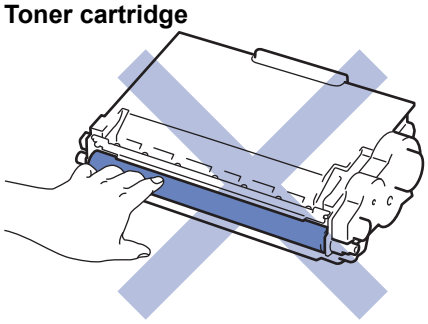

Drum unit

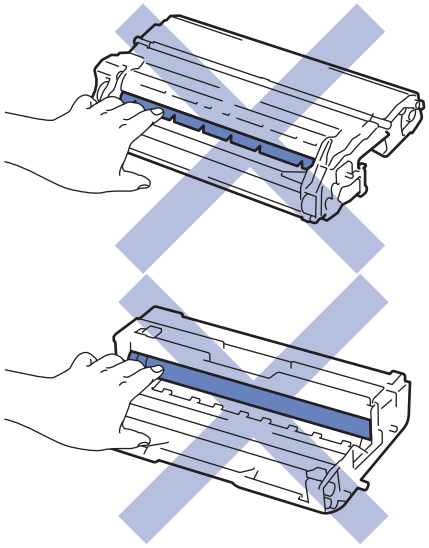

Related Information

- Routine Maintenance
- Replace the Toner Cartridge
- Replace the Drum Unit
- Error and Maintenance Messages
- Supplies

Replace the Toner Cartridge

1. Make sure the machine is turned on.
2. Open the front cover.

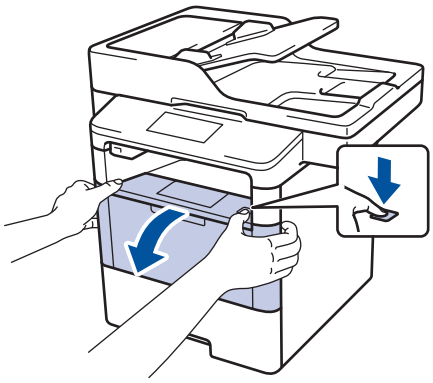

3. Remove the toner cartridge and drum unit assembly from the machine.

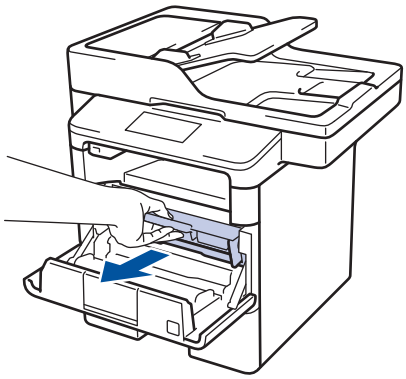

4. Push down the green lock lever and take the toner cartridge out of the drum unit.

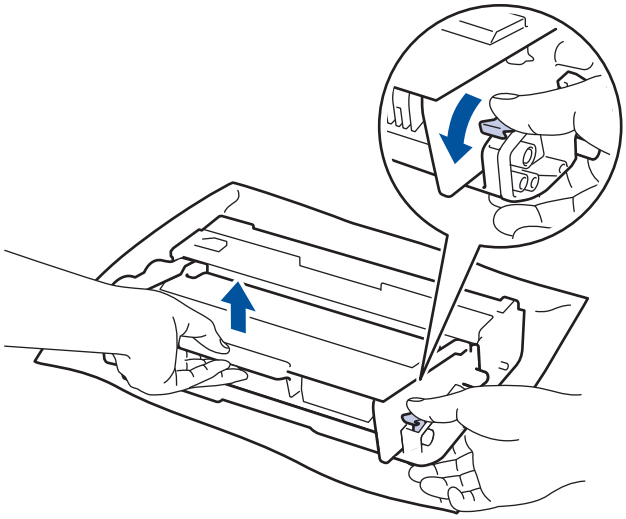

5. Unpack the new toner cartridge.
6. Remove the protective cover.

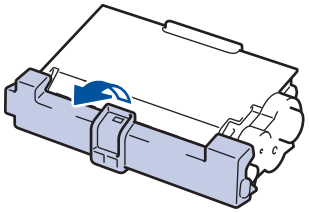

7. Put the new toner cartridge firmly into the drum unit until you hear it lock into place.

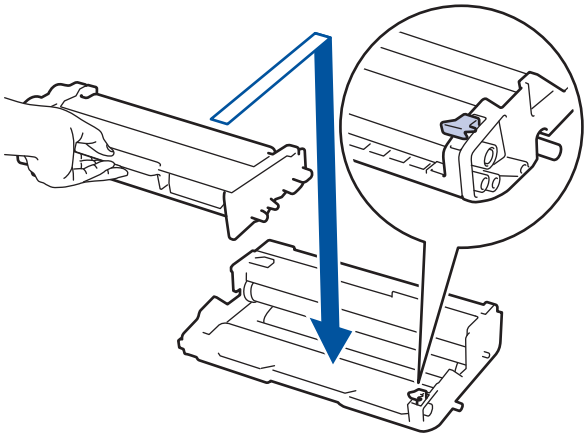

Make sure you put the toner cartridge in correctly or it may separate from the drum unit.

8. Clean the corona wire inside the drum unit by gently sliding the green tab from left to right and right to left several times.

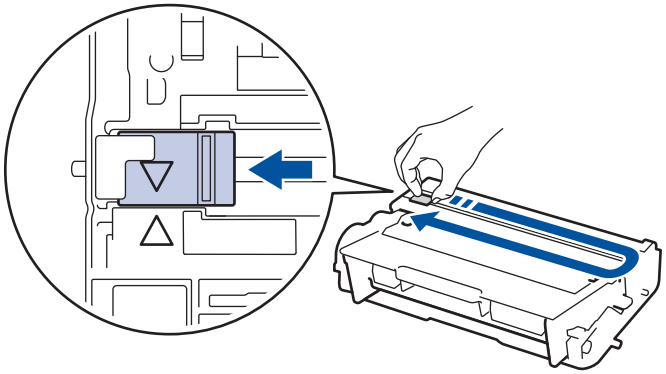

Be sure to return the tab to the Home position (▲). The arrow on the tab must be aligned with the arrow on the drum unit. If it is not, printed pages may have a vertical stripe.

9. Install the toner cartridge and drum unit assembly back into the machine.

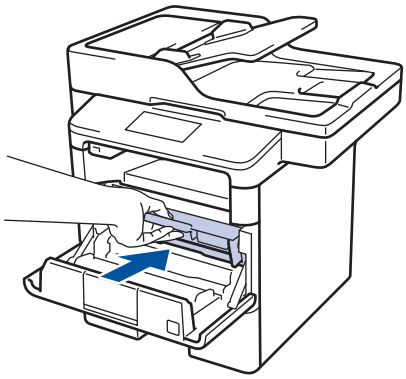

10. Close the front cover of the machine.

- After replacing a toner cartridge, DO NOT turn off the machine or open the front cover until the machine's display returns to Ready Mode.
- The toner cartridge that comes with your Brother machine is a Inbox toner cartridge.
- It is a good idea to keep a new toner cartridge ready for use when you see the Toner Low warning.
- To ensure high quality printing, we recommend using only Brother Original toner cartridges. When you want to buy toner cartridges, contact Brother Dealer.
- DO NOT unpack the new toner cartridge until you are ready to install it.
- If a toner cartridge is left unpacked for a long time, the toner life will be shortened.
- Brother strongly recommends you DO NOT refill the toner cartridge provided with your machine. We also strongly recommend you continue to use only Brother Original replacement toner cartridges. Use or attempted use of third party toner and/or cartridges in the Brother machine may cause damage to the machine and/or may result in unsatisfactory print quality. Our limited warranty coverage does not apply to any problem that is caused by the use of third party toner and/or cartridges. To protect your investment and obtain premium performance from the Brother machine, we strongly recommend the use of Brother Original Supplies.

Related Information

- Replace Supplies

Replace the Drum Unit

1. Make sure the machine is turned on.
2. Open the front cover.

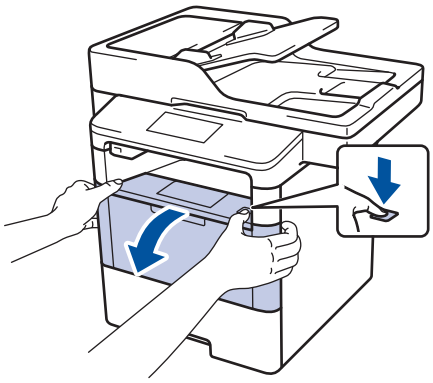

3. Remove the toner cartridge and drum unit assembly from the machine.

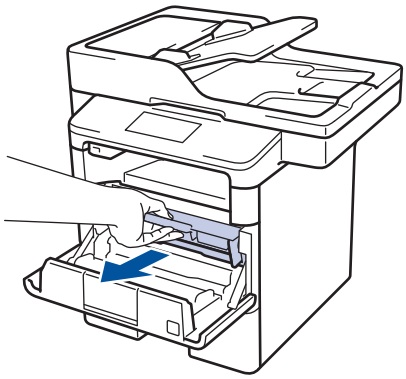

4. Push down the green lock lever and take the toner cartridge out of the drum unit.

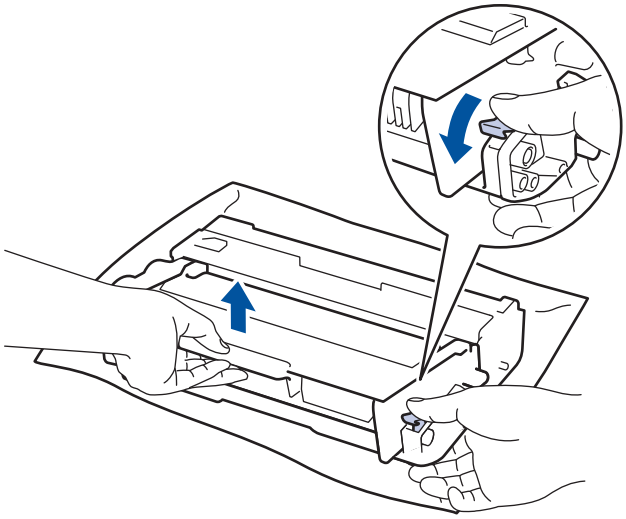

5. Unpack the new drum unit.
6. Put the toner cartridge firmly into the new drum unit until you hear it lock into place.

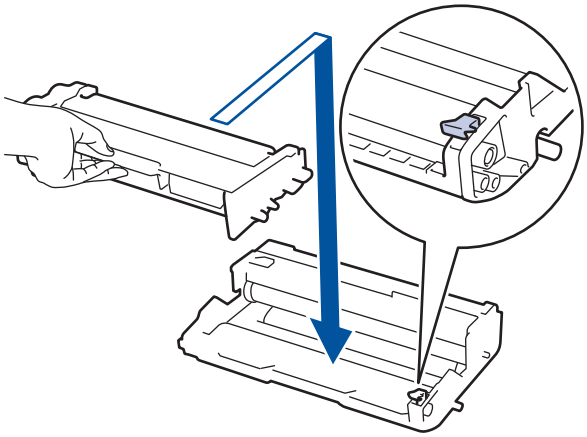

Make sure you put the toner cartridge in correctly or it may separate from the drum unit.

7. Clean the corona wire inside the drum unit by gently sliding the green tab from left to right and right to left several times.

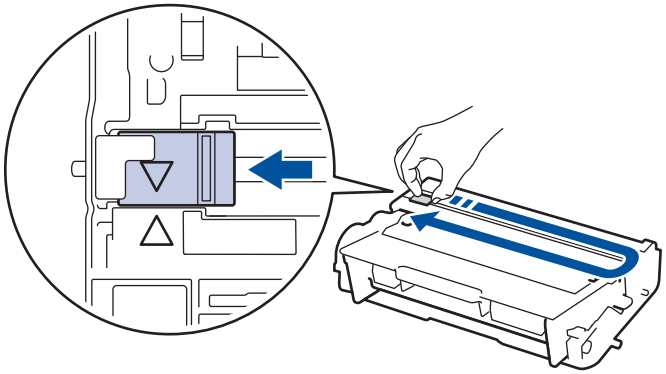

Be sure to return the tab to the Home position (▲). The arrow on the tab must be aligned with the arrow on the drum unit. If it is not, printed pages may have a vertical stripe.

8. Install the toner cartridge and drum unit assembly back into the machine.

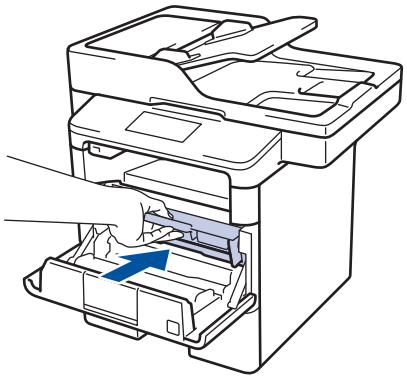

9. Close the front cover of the machine.

NOTE

- Drum wear and tear occurs due to use and rotation of the drum and interaction with paper, toner and other materials in the paper path. In designing this product, Brother decided to use the number of rotations of the drum as a reasonable determinant of the drum life. When a drum reaches the factory-established rotation limit corresponding to the rated page yield, the product's LCD will advise you to replace the drum. The product will continue to function; however, print quality may not be optimal.
- If an unpacked drum unit is placed in direct sunlight (or room light for long periods of time), the unit may be damaged.
- There are many factors that determine the actual drum life, such as the temperature, humidity, type of paper, type of toner used and so on. Under ideal conditions, the average drum life is estimated at approximately 30,000 pages based on 1 page per job and 50,000 pages based on 3 pages per job [A4/

letter simplex pages]. The number of pages may be affected due to a variety of factors including but not limited to media type and media size.

Because we have no control over the many factors that determine the actual drum life, we cannot guarantee a minimum number of pages that will be printed by your drum.

- For best performance, use only Brother Original toner.
- The machine should be used only in a clean, dust-free environment with adequate ventilation.

  Printing with a non-Brother drum unit may reduce not only the print quality but also the quality and life of the machine itself. Warranty coverage does not apply to problems caused by the use of a non-Brother drum unit.

Related Information

- Replace Supplies

Clean the Machine

Clean the outside and inside of the machine regularly with a dry, lint-free cloth.

When you replace the toner cartridge or the drum unit, make sure you clean the inside of the machine. If printed pages are stained with toner, clean the inside of the machine with a dry, lint-free cloth.

WARNING

- DO NOT use flammable substances, any type of spray, or an organic solvent/liquid containing alcohol or ammonia to clean the inside or outside of the product. Doing so could cause a fire. Instead, use only a dry, lint-free cloth.

IMPORTANT

- DO NOT use isopropyl alcohol to remove dirt from the control panel. It may crack the panel.
- To avoid print quality problems, DO NOT touch the shaded parts shown in the illustrations.

Toner cartridge

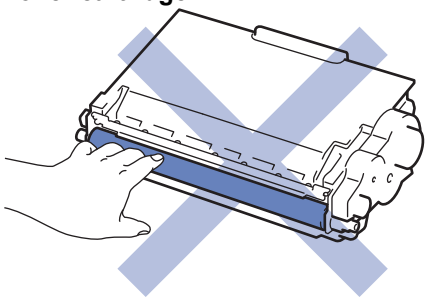

Drum unit

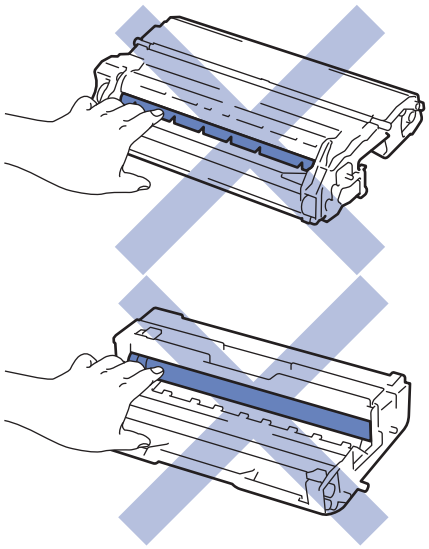

Related Information

- Routine Maintenance
- Clean the Scanner
- Clean the Touchscreen LCD

- Clean the Corona Wire
- Clean the Drum Unit
- Clean the Paper Pick-up Rollers

Clean the Scanner

1. Press and hold ⏻ to turn the machine off.
2. Lift the document cover (1). Clean the white plastic surface (2) and scanner glass (3) underneath it with a soft lint-free cloth moistened with water.

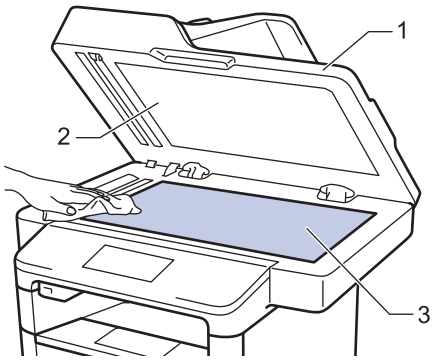

3. In the ADF unit, clean the white bar (1) and the scanner glass strip (2) underneath it with a soft lint-free cloth moistened with water.

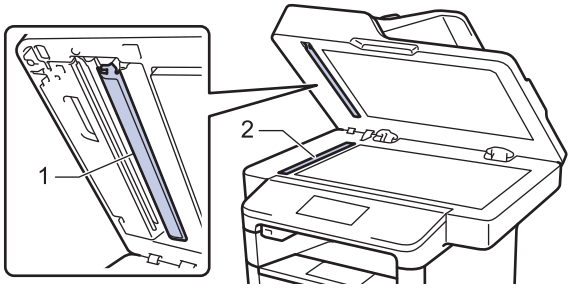

4. Open the scanner glass cover (1), and then clean the other white bar (2) and scanner glass strip (3) (supported models only).

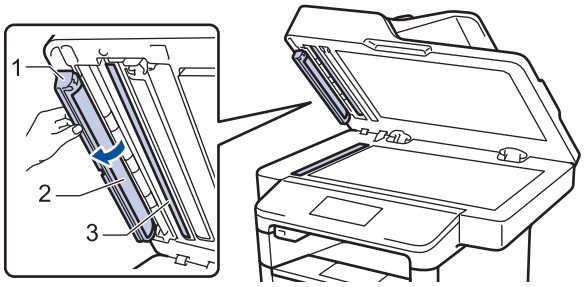

5. Close the document cover.
6. Press ⏻ to turn the machine on.

Related Information

- Clean the Machine
- Other Problems
- Telephone and Fax Problems

Clean the Touchscreen LCD

IMPORTANT

DO NOT use any type of liquid cleaners (including ethanol).

1. Press and hold ⏻ to turn the machine off.
2. Clean the touchscreen with a dry, soft lint-free cloth.

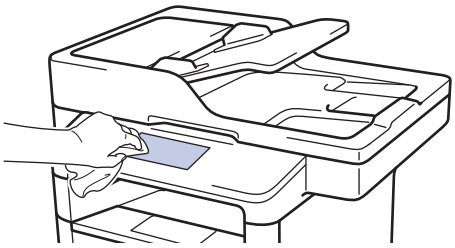

3. Press ⏻ to turn the machine on.

Related Information

- Clean the Machine

Clean the Corona Wire

If you have print quality problems or the control panel displays `[Drum !]` status, clean the corona wire.

1. Open the front cover.

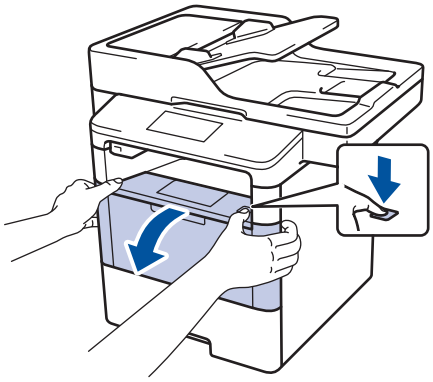

2. Remove the toner cartridge and drum unit assembly from the machine.

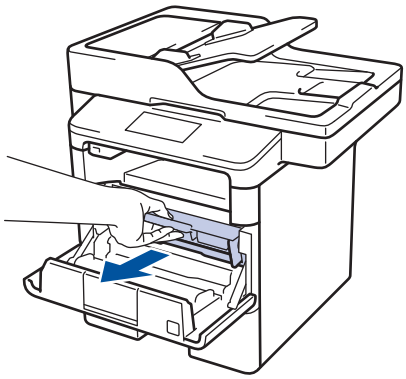

3. Clean the corona wire inside the drum unit by gently sliding the green tab from left to right and right to left several times.

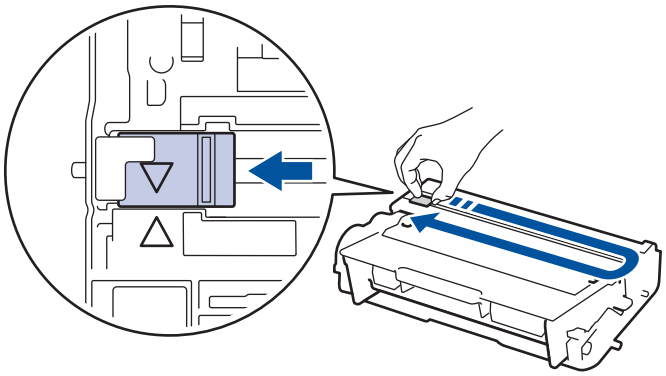

Be sure to return the tab to the Home position (▲). The arrow on the tab must be aligned with the arrow on the drum unit. If it is not, printed pages may have a vertical stripe.

4. Install the toner cartridge and drum unit assembly back into the machine.

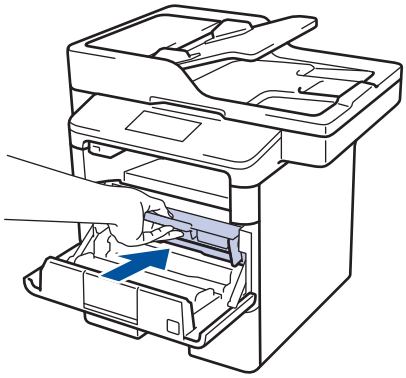

5. Close the front cover of the machine.

Related Information

- Clean the Machine
- Error and Maintenance Messages

Clean the Drum Unit

If your printout has dots or other repeating marks at 94 mm intervals, the drum may have foreign material, such as glue from a label, stuck on the drum surface.

1. Make sure the machine is in Ready Mode.
2. Press [Settings] > [All Settings] > [Print Reports] > [Drum Dot Print].
3. Press [Yes].

   The machine prints the Drum Dot Check Sheet.
4. Press .
5. Press and hold to turn the machine off.
6. Open the front cover.

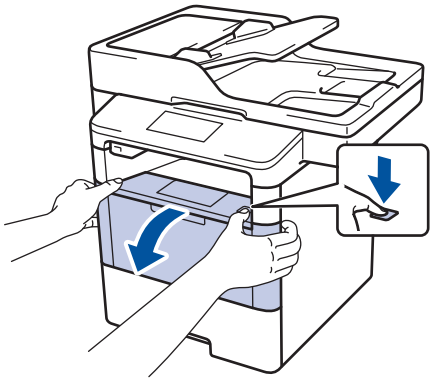

7. Remove the toner cartridge and drum unit assembly from the machine.

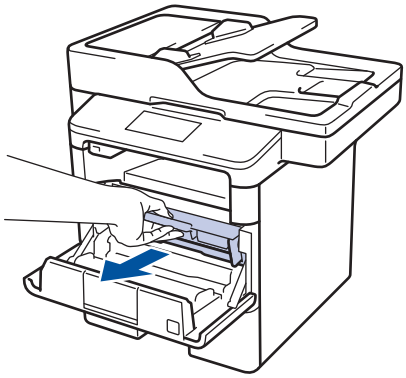

8. Push down the green lock lever and take the toner cartridge out of the drum unit.

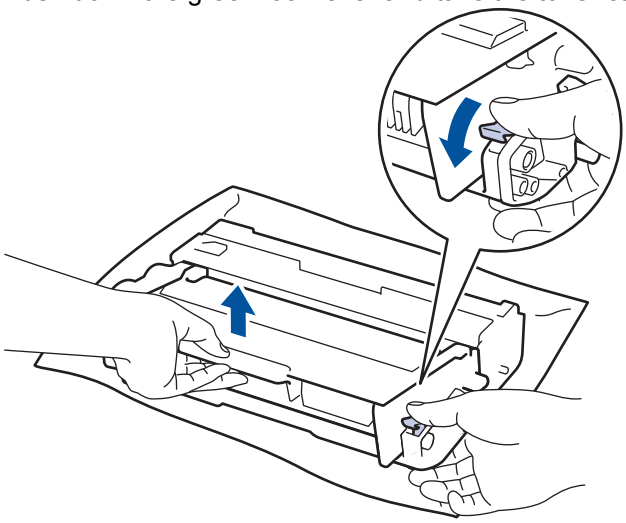

9. Turn the drum unit as shown in the illustration. Make sure that the drum unit gear is on the left side.

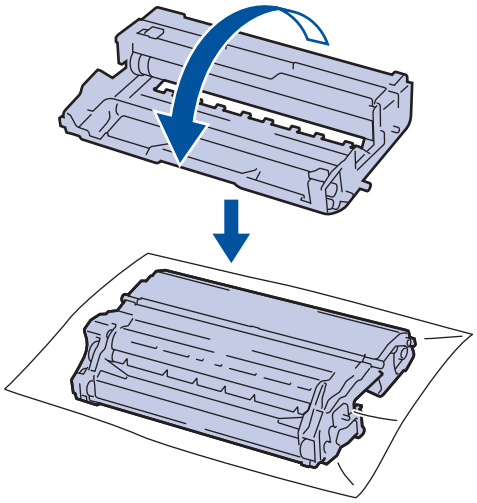

10. Use the numbered markers next to the drum roller to find the mark on the drum. For example, a dot in column 2 on the check sheet means that there is a mark in drum region “2”.

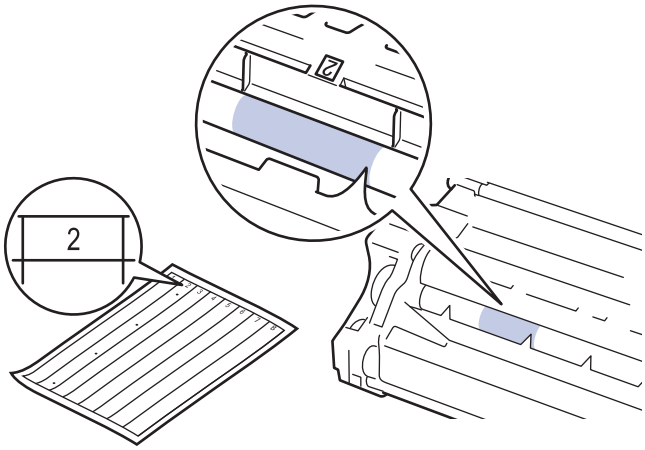

11. Turn the edge of the drum unit toward you while looking at the drum surface to find the mark.

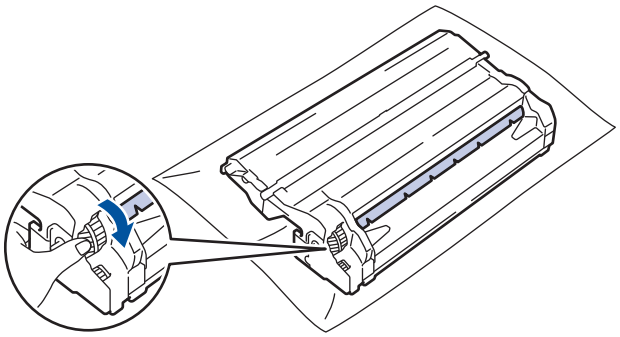

- To avoid print quality problems, DO NOT touch the surface of the drum unit, only the edge.
- You can turn the drum unit gear more easily by pulling down the black levers. When you have finished turning the gear, push the levers back to the original position.

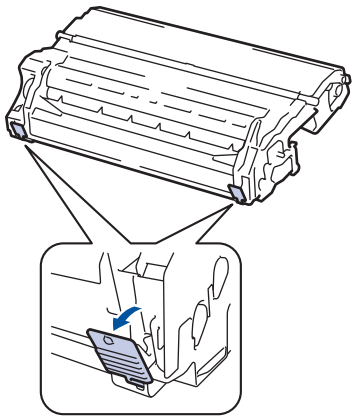

12. Wipe the surface of the drum gently with a dry cotton swab until the mark on the surface comes off.

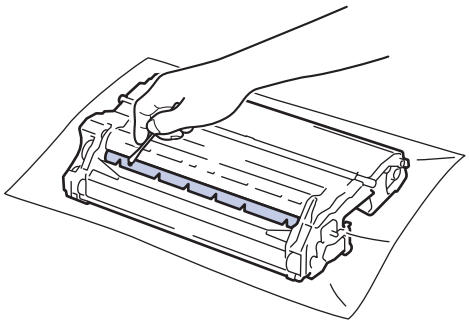

NOTE

DO NOT clean the surface of the photosensitive drum with a sharp object or any liquids.

13. Put the toner cartridge firmly into the drum unit until you hear it lock into place.

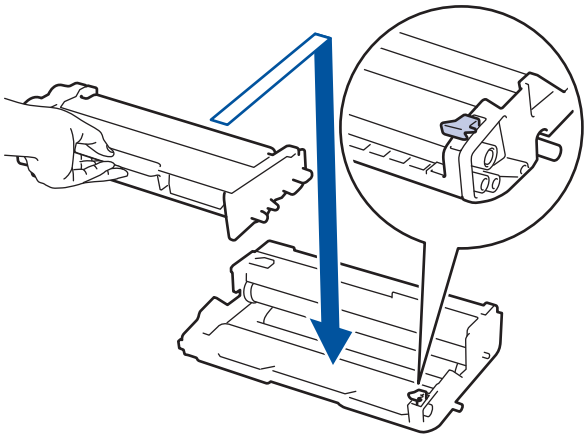

Make sure you put the toner cartridge in correctly or it may separate from the drum unit.

14. Install the toner cartridge and drum unit assembly back into the machine.

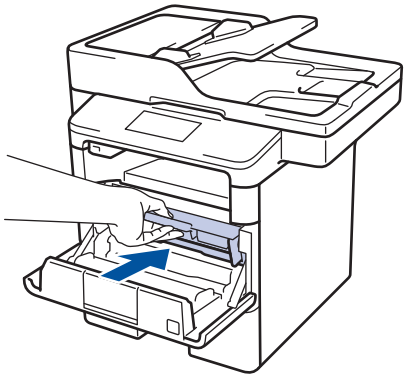

15. Close the front cover of the machine.
16. Press ⏻ to turn the machine on.

Related Information

- Clean the Machine
- Improve the Print Quality

Clean the Paper Pick-up Rollers

Cleaning the paper pick-up rollers periodically may prevent paper jams by ensuring that paper feeds properly.

If you have paper feed problems, clean the pick-up rollers as follows:

1. Press and hold ⏻ to turn the machine off.
2. Pull the paper tray completely out of the machine.

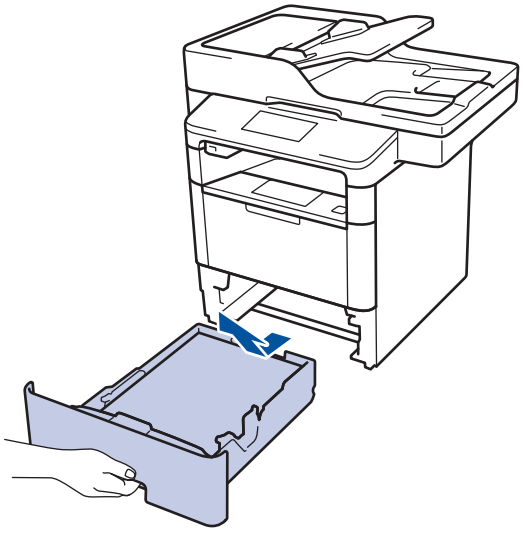

3. If paper is loaded or something is stuck inside in the paper tray, remove it.
4. Tightly wring out a lint-free cloth soaked in lukewarm water, and then wipe the separator pad on the paper tray to remove dust.

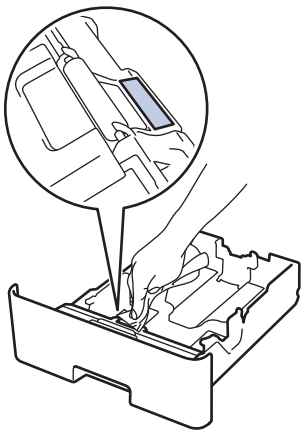

5. Wipe the two pick-up rollers inside the machine to remove dust.

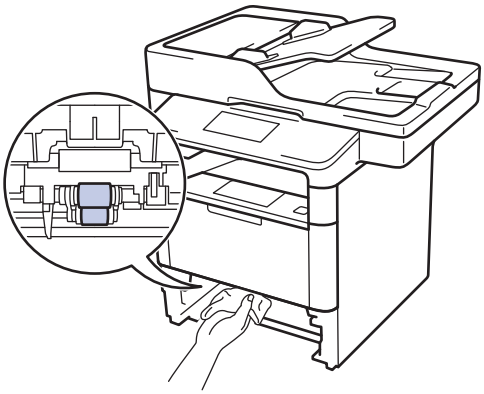

6. Reload the paper and put the paper tray firmly back in the machine.
7. Press ⏻ to turn the machine on.

Related Information

- Clean the Machine
- Printing Problems

Check the Remaining Life of Parts

1. Press [Settings] > [All Settings] > [Machine Info.] > [Parts Life].
2. Press the machine part you want to check.
   The LCD displays the approximate remaining part life.
3. Press .

To display the approximate remaining life of the toner cartridge, press on the LCD.

Related Information

- Routine Maintenance

Pack and Ship Your Machine

There are two ways to pack and ship your machine. To determine which you should follow, check the machine's original packing material for a toner pad.

- If there is NO toner pad in the original carton, see *Related Information*: *Pack the Machine and the Toner Cartridge Together*.
- If there is a toner pad in the original carton, see *Related Information*: *Pack the Machine and the Toner Cartridge Separately*.

Toner Pad

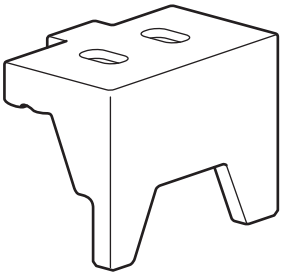

Related Information

- Routine Maintenance
- Pack the Machine and the Toner Cartridge Together
- Pack the Machine and the Toner Cartridge Separately

Pack the Machine and the Toner Cartridge Together

WARNING

- This product is heavy and weighs more than 16.5 kg. To prevent possible injuries, at least two people should lift the product by holding it at the front and back.

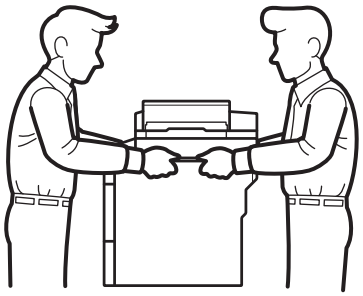

- If the machine has the Optional Tray(s) installed, remove the Optional Tray(s) BEFORE moving the machine. Attempting to move the machine without removing the Optional Tray(s) may cause injury to you or damage to the machine.
- Pack the Optional Tray(s) separately in its original carton with original packing material.

- If for any reason you must ship your machine, carefully repack the machine in the original packaging to avoid any damage during transit. The machine should be adequately insured with the carrier.

1. Press and hold ⏻ to turn the machine off. Leave the machine off for at least 10 minutes to cool down.
2. Disconnect all the cables, and then unplug the power cord from the electrical socket.

The machine is equipped with a non-detachable AC power cord depending on the model.

3. Put the machine into the bag it originally came in.
4. Pack the machine, the printed materials, and the AC power cord (if applicable) in the original carton with the original packing material as shown.

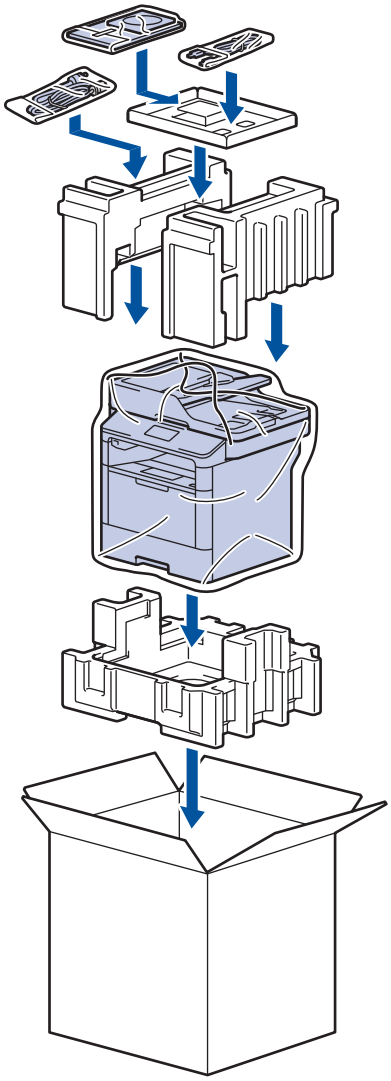

5. Close the carton and tape it shut.
6. If you have a Lower Tray, repack it as shown.

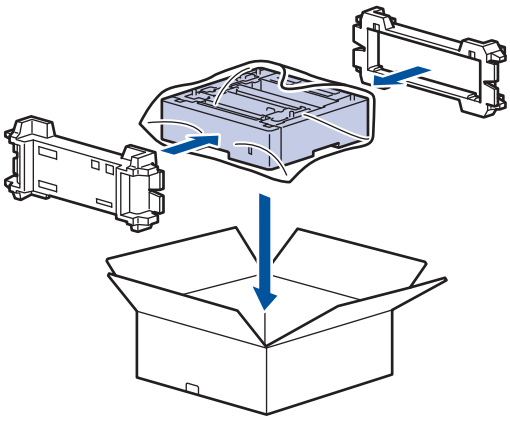

Related Information

- Pack and Ship Your Machine

Pack the Machine and the Toner Cartridge Separately

WARNING

- This product is heavy and weighs more than 16.5 kg. To prevent possible injuries, at least two people should lift the product by holding it at the front and back.

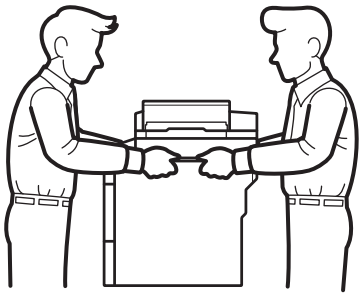

- If the machine has the Optional Tray(s) installed, remove the Optional Tray(s) BEFORE moving the machine. Attempting to move the machine without removing the Optional Tray(s) may cause injury to you or damage to the machine.
- Pack the Optional Tray(s) separately in its original carton with original packing material.

- If for any reason you must ship your machine, carefully repack the machine in the original packaging to avoid any damage during transit. The machine should be adequately insured with the carrier.

1. Press and hold ⏻ to turn the machine off. Leave the machine off for at least 10 minutes to cool down.
2. Disconnect all the cables, and then unplug the power cord from the electrical socket.

The machine is equipped with a non-detachable AC power cord depending on the model.

3. Remove the toner cartridge and drum unit assembly.

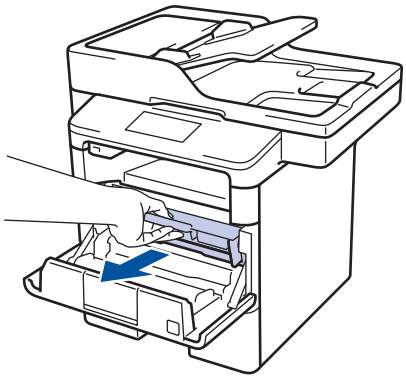

4. Push down the green lock lever and take the toner cartridge out of the drum unit.

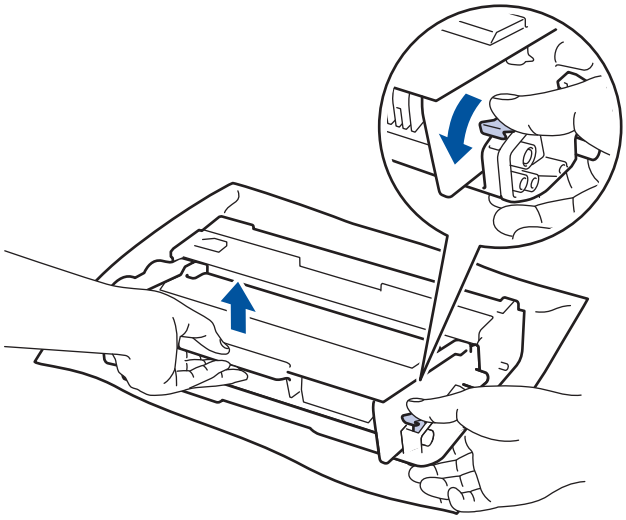

5. Put the protective material on the toner cartridge. Put it in a plastic bag.
6. Install only the drum unit back into the machine.

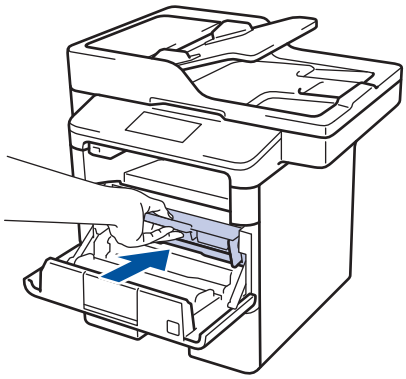

7. Close the front cover.
8. Put the machine into the bag it originally came in.
9. Pack the machine, the printed materials, and the AC power cord (if applicable) in the original carton with the original packing material as shown.

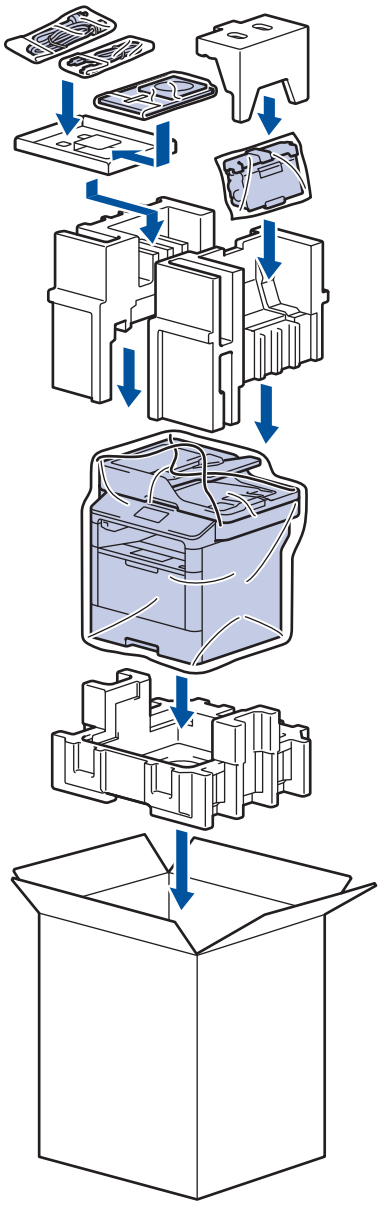

10. Close the carton and tape it shut.
11. If you have a Lower Tray, repack it as shown.

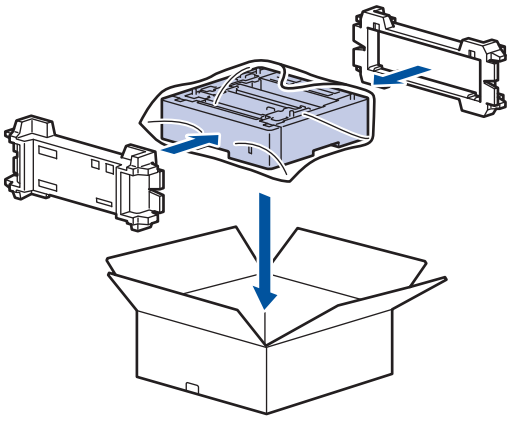

Related Information

- Pack and Ship Your Machine

Replace Periodic Maintenance Parts

Replace the following parts regularly to maintain print quality. The parts listed below must be replaced after printing approximately 50,000 pages [1] for the PF Kit MP and 200,000 pages [1] for the PF Kit for the Paper Tray [2], PF Kit for the Optional Tray(s), Fuser Unit, and Laser Unit.

Contact Brother customer service or your local Brother dealer when the following message appears on the LCD:

LCD Message	Description
`Replace Fuser` [3]	Replace the Fuser Unit.
`Replace Laser` [3]	Replace the Laser Unit.
`Replace PF Kit 1` [3]	Replace the Paper Feeding Kit for the Paper Tray.
`Replace PF Kit 2` [3] [4]	Replace the Paper Feeding Kit for the Optional Tray(s).
`Replace PF Kit MP` [3]	Replace the Paper Feeding Kit for the Multi-purpose Tray.

Related Information

- Routine Maintenance

1 Letter or A4 size 1-sided pages

2 (DCP-L5600DN/MFC-L5700DN/MFC-L5755DW/MFC-L5900DW) After December 2016, you must update your machine's firmware. Go to your model's **Downloads** page on the Brother Solution Center at support.brother.com.

3 Replacement frequency depends on the complexity of printed pages, percentage of coverage, and the type of media used.

4 If you use the Optional Tray(s) with your machine, this message will appear on the LCD. When the machine has multiple Optional Trays, the machine displays messages using numbers corresponding to each Optional Tray.

Machine Settings

Customise settings and features, create shortcuts, and work with options displayed on the machine's LCD to make your Brother machine a more efficient work tool.

- Change Machine Settings from the Control Panel
- Change Machine Settings from Your Computer

Change Machine Settings from the Control Panel

- In the Event of Power Failure (Memory Storage)
- General Settings
- Save Your Favourite Settings as a Shortcut
- Print Reports
- Settings and Features Tables

In the Event of Power Failure (Memory Storage)

Your menu settings are stored permanently, and in the event of a power failure will not be lost.Temporary settings (for example, Contrast, Overseas Mode) will be lost.

- During a power failure, the machine will retain the date and time and programmed fax timer jobs (for example: Delayed Fax) for approximately 60 hours. Other fax jobs in the machine's memory will not be lost.

Related Information

- Change Machine Settings from the Control Panel

General Settings

- Adjust the Machine's Volume
- Change for Daylight Saving Time
- Set Sleep Mode Countdown
- About Deep Sleep Mode
- Set Auto Power Off Mode
- Set the Date and Time
- Set the Time Zone
- Adjust the LCD Backlight Brightness
- Change How Long the LCD Backlight Stays On
- Set Your Station ID
- Set Tone or Pulse Dialling Mode
- Reduce Toner Consumption
- Add a Prefix to Every Fax Number
- Prevent Dialling a Wrong Number (Dial Restriction)
- Reduce Printing Noise
- Change the Language on the LCD

Adjust the Machine's Volume

1. Press [Settings] > [All Settings] > [General Setup] > [Volume].
2. Press one of the following options:

   (The options will vary depending on your machine.)

   - [Ring]

     Adjust the ring volume.
   - [Beep]

     Adjust the volume of the beep you hear when you press a button, make a mistake, or after you send or receive a fax.
   - [Speaker]

     Adjust the speaker volume.
3. Select the [Off], [Low], [Med] or [High] option, and then press the option you want.
4. Press .

Related Information

- General Settings

Change for Daylight Saving Time

You can program the machine to change for Daylight Saving Time.

To forward the time by one hour or backward one hour, select the setting in accordance with the following table. Make sure you have set the correct date and time in the Date & Time setting.

Applicable Models	To Forward One Hour	To Backward One Hour
All models	`Forward Hour`	`Backward Hour`

1. Press [Settings] > [All Settings] > [Initial Setup] > [Date & Time] > [Daylight Save].
2. Press [Forward Hour] or [Backward Hour].
3. Press .

Related Information

- General Settings

Set Sleep Mode Countdown

The Sleep Mode (or Power Save Mode) setting can reduce power consumption. When the machine is in Sleep Mode, it acts as though it is turned off. The machine will wake up and start printing when it receives a print job or a fax. Use these instructions to set a time delay (countdown) before the machine enters Sleep Mode.

- You can choose how long the machine must be idle before it goes into Sleep Mode.
- The timer will restart if any operation is carried out on the machine, such as receiving a print job.

1. Press [Settings] > [All Settings] > [General Setup] > [Ecology] > [Sleep Time].
2. Enter the length of time (maximum 50 minutes) the machine will remain idle before entering Sleep Mode, and then press [OK].
3. Press .

Related Information

- General Settings

About Deep Sleep Mode

If the machine is in Sleep Mode and does not receive any jobs for certain length of time, the machine will automatically enter Deep Sleep Mode. The length of time is based on your specific model and settings.

Deep Sleep Mode uses less power than Sleep Mode.

Applicable Models	Machine's LCD in Deep Sleep Mode	Conditions That Will Wake the Machine
All models	The LCD backlight turns off and blinks.	• The machine receives a job. • Someone presses or the touchscreen LCD.

Related Information

- General Settings

Set Auto Power Off Mode

If the machine is in Deep Sleep Mode for certain length of time, based on your model and settings, the machine will go into Power Off Mode automatically. The machine does not go into Power Off Mode when the machine is connected to a network or has secure print data in the memory.

- To start printing, press on the control panel and then send a print job.

1. Press [Settings] > [All Settings] > [General Setup] > [Ecology] > [Auto Power Off].
2. Swipe up or down or press ▲ or ▼ to display the [Off], [1hour], [2hours], [4hours] or [8hours] option, and then press the option you want.
3. Press .

Related Information

- General Settings

Set the Date and Time

1. Press [Settings] > [All Settings] > [Initial Setup] > [Date & Time] > [Date].
2. Enter the last two digits of the year using the LCD, and then press [OK].
3. Enter the two digits for the month using the LCD, and then press [OK].
4. Enter the two digits for the day using the LCD, and then press [OK].
5. Press [Time].
6. Enter the time (in 24-hour format) using the LCD, and then press [OK].
   (For example: enter 19:45 for 7:45 PM.)
7. Press .

Related Information

- General Settings

Set the Time Zone

Set the time zone for your location on the machine.

1. Press [Settings] > [All Settings] > [Initial Setup] > [Date & Time] > [Time Zone].
2. Enter your time zone.
3. Press [OK].
4. Press .

Related Information

- General Settings

Adjust the LCD Backlight Brightness

If you are having difficulty reading the LCD, changing the brightness setting may help.

1. Press [Settings] > [All Settings] > [General Setup] > [LCD Settings] > [Backlight].
2. Press the [Light], [Med] or [Dark] option.
3. Press .

Related Information

- General Settings

Change How Long the LCD Backlight Stays On

Set how long the LCD backlight stays on.

1. Press [Settings] > [All Settings] > [General Setup] > [LCD Settings] > [Dim Timer].
2. Press the [Off], [10Secs], [20Secs] or [30Secs] option.
3. Press .

Related Information

- General Settings

Set Your Station ID

Related Models: MFC-L5700DN/MFC-L5755DW/MFC-L5900DW/MFC-L6700DW/MFC-L6900DW

Set the machine to print your Station ID and the fax's date and time at the top of each fax you send.

1. Press [Settings] > [All Settings] > [Initial Setup] > [Station ID] > [Fax].
2. Enter your fax number (up to 20 digits) using the LCD, and then press [OK].
3. Press [Tel].
4. Enter your telephone number (up to 20 digits) using the LCD, and then press [OK].
5. Press [Name].
6. Enter your name (up to 20 characters) using the LCD, and then press [OK].

- Press A 1 @ to cycle between letters, numbers and special characters. (The characters available may differ depending on your country.)
- If you enter an incorrect character, press ◀ or ▶ to move the cursor to it and press ⌫. Press the correct character.
- To enter a space, press [Space] or ▶.
- For more detailed information, see *Related Information*.

7. Press ⌂.

Related Information

- General Settings
- How to Enter Text on Your Brother Machine
- Transfer Faxes to Another Fax Machine
- Transfer the Fax Journal Report to Another Fax Machine

Set Tone or Pulse Dialling Mode

Related Models: MFC-L5700DN/MFC-L5755DW/MFC-L5900DW/MFC-L6700DW/MFC-L6900DW

Your Brother machine is set for a Tone dialling service. If you have a Pulse dialling (rotary) service, you must change the dialling mode.

This feature is not available in some countries.

1. Press [Settings] > [All Settings] > [Initial Setup] > [Tone/Pulse].
2. Press [Tone] or [Pulse].
3. Press .

Related Information

- General Settings

Reduce Toner Consumption

Using the Toner Save feature may reduce toner consumption. When Toner Save is set to on, the print on your documents appears lighter.

We DO NOT recommend using the Toner Save feature for printing photo or greyscale images.

1. Press [Settings] > [All Settings] > [General Setup] > [Ecology] > [Toner Save].
2. Press [On] or [Off].
3. Press .

Related Information

- General Settings

Add a Prefix to Every Fax Number

Related Models: MFC-L5700DN/MFC-L5755DW/MFC-L5900DW/MFC-L6700DW/MFC-L6900DW

The Dial Prefix setting will automatically dial a predefined number before every fax number you dial. For example: If your telephone system requires a 9 to dial an outside number, use this setting to automatically dial 9 for every fax you send.

- Use the numbers and symbols from 0 to 9, #, and *. (You cannot use ! with any other numbers or symbols.)
- If your telephone system requires a time break recall (hookflash), press ! on the LCD.

1. Press [Settings] > [All Settings] > [Initial Setup] > [Dial Prefix].
2. Press [On] or [Off].

Option	Description
On	To activate the prefix number setting, select On. If you selected On, go to the next step to set a prefix number.
Off	To deactivate the prefix number setting, select Off. If you selected Off, press to exit.

3. Press [Dial Prefix].
4. Enter a prefix number (up to five digits) using the LCD, and then press [OK].

To change the prefix number, press ◀ or ▶ to position the cursor under the digit to be deleted and press the Back Space button. Then press the correct digit.

Repeat until the prefix number is correct, and then press [OK].

5. Press .

Related Information

- General Settings

Prevent Dialling a Wrong Number (Dial Restriction)

Related Models: MFC-L5700DN/MFC-L5755DW/MFC-L5900DW/MFC-L6700DW/MFC-L6900DW

This feature prevents users from sending a fax or call to the wrong number by mistake. You can set the machine to restrict dialling when you use the dial pad, Address Book, Shortcuts and LDAP search.

1. Press [Settings] > [All Settings] > [Fax] > [Dial Restriction].
2. Press one of the following options:
   - [Dial Pad]
   - [Address Book]

   If you combine Address Book numbers when dialling, the numbers will be recognised as dial pad input and will not be restricted.

   - [Shortcuts]
   - [LDAP Server]
3. Press one of the following options:

Option	Description
Enter # Twice	The machine prompts you to re-enter the number, and then if you re-enter the same number correctly, the machine will start dialling. If you re-enter the wrong number, the LCD will display an error message.
On	The machine restricts all fax sending and outbound calls for that dialling method.
Off	The machine does not restrict the dialling method.

   - The [Enter # Twice] setting will not work if you use an external phone or press [Hook] before entering the number. You will not be asked to re-enter the number.
   - If you choose [On] or [Enter # Twice], you cannot use the Broadcasting feature.
4. Press .

Related Information

- General Settings

Reduce Printing Noise

The Quiet Mode setting can reduce printing noise. When Quiet Mode is turned on, the print speed becomes slower. The factory setting is off.

1. Press [Settings] > [All Settings] > [General Setup] > [Ecology] > [Quiet Mode].
2. Press [On] or [Off].
3. Press .

Related Information

- General Settings

Change the Language on the LCD

Change the LCD language if needed.

This feature is not available in some countries.

1. Press [Settings] > [All Settings] > [Initial Setup] > [Local Language].
2. Press your language.
3. Press .

Related Information

- General Settings

Save Your Favourite Settings as a Shortcut

- Add Shortcuts
- Change or Delete Shortcuts

Add Shortcuts

You can add the Fax, Copy, Scan, Web Connect and Apps settings you use most frequently by saving them as your Shortcuts. Later you can press the Shortcut to apply these settings instead of manually re-entering them.

Some Shortcut menus are not available depending on your model.

These instructions describe how to add a Copy Shortcut. The steps for adding a Fax, Scan, Web Connect or Apps Shortcut are very similar.

1. Press [Shortcuts].
2. Press a tab from [1] to [8].
3. Press + where you have not added a Shortcut.
4. Press ▲ or ▼ to display [Copy], and then press [Copy].
5. Swipe up or down or press ▲ or ▼ to display the copy presets, and then press the copy preset you want.
6. Swipe up or down or press ▲ or ▼ to display the available settings, and then press the setting you want to change.
7. Swipe up or down or press ▲ or ▼ to display the available options for the setting, and then press the option you want.

   Repeat these two steps until you have selected all the settings and options you want.
8. When you have finished changing settings, press [Save as Shortcut].
9. Read and confirm the displayed list of settings you have selected, and then press [OK].
10. Enter a name for the Shortcut using the LCD, and then press [OK].

Related Information

- Save Your Favourite Settings as a Shortcut

Change or Delete Shortcuts

You cannot change a Web Connect Shortcut or Apps Shorcut. If you need to change them, delete them, and then add a new Shortcut.

1. Press [Shortcuts].
2. Press a tab from [1] to [8] to display the Shortcut you want to change.
3. Press the Shortcut you want to change.

   The settings for the Shortcut you selected appear.

To delete the Shortcut or edit the name, press and hold the Shortcut until the options appear, and then follow the on-screen menus.

4. Press [Options].
5. Change the settings for the Shortcut if needed.
6. Press [OK] (if needed).
7. When finished, press [Save as Shortcut].
8. Read and confirm the displayed list of settings you have selected, and then press [OK].
9. Do one of the following:
   - To overwrite the Shortcut, press [Yes].
   - If you do not want to overwrite the Shortcut, press [No] to enter a new Shortcut name.

     Enter a new name using the LCD, and then press [OK].

To edit the name, hold down to delete the current name.

Related Information

- Save Your Favourite Settings as a Shortcut

Print Reports

- Reports
- Print a Report

Reports

The following reports are available:

Transmission (MFC models)

The Transmission report prints a Transmission Verification Report of your last transmission.

Address Book (MFC models)

The Address Book report prints an alphabetical list of names and numbers stored in the Address Book memory.

Fax Journal (MFC models)

The Fax Journal prints a list of information about your last 200 incoming and outgoing faxes. (TX means Transmit, RX means Receive)

User Settings

The User Settings report prints a list of your current settings.

Printer Settings

The Printer Settings report prints a list of your current printer settings.

Network Configuration (Models with network functionality)

The Network Configuration report prints a list of your current network settings.

Print File List

The Print File List prints a list of the fonts and print macros stored in the machine.

Drum Dot Print

The Drum Dot Print prints the drum dot sheet, which helps when it is time to clean the drum unit.

WLAN Report (Models with wireless network functionality)

The WLAN Report prints the wireless LAN connectivity diagnosis.

Related Information

- Print Reports

Print a Report

1. Press [Settings] > [All Settings] > [Print Reports].
2. Swipe up or down or press ▲ or ▼ to display the report you want to print, and then press it.
3. Do one of the following:
   - If you choose [XMIT Verify], do one of the following:
     - To view the Transmission Verification Report, press [View on LCD].
     - To print the Transmission Verification Report, press [Print Report].
   - If you choose other reports, go to next step.
4. Press [Yes].
5. Press .

Related Information

- Print Reports

Settings and Features Tables

The Settings tables will help you understand the menu selections and options that are found in the machine's programs.

- Settings Tables (MFC models)
- Settings Tables (DCP models)
- Features Tables (MFC models)
- Features Tables (DCP models)

Settings Tables (MFC models)

Related Models: MFC-L5700DN/MFC-L5755DW/MFC-L5900DW/MFC-L6700DW/MFC-L6900DW

[Settings]

Level 1	Level 2	Descriptions
	Date & Time	Access the Date and Time setting menus.
Toner	Toner Life	View the approximate remaining toner life.
	Test Print	Print a test page.
Network	Wired LAN	Access the Wired LAN setting menus.
	WLAN (For wireless network models)	Access the WLAN setting menus.
Screen Settings	-	Access the default screen setting menus.
Wi-Fi Direct (For wireless network models)	-	Access the Wi-Fi Direct setting menus.
Fax Preview (Available only for certain models)	-	View received faxes on the LCD.
Tray Setting	-	Access the tray setting menus.
All Settings	-	Configure the detailed settings.

[All Settings] > [General Setup]

Level 1	Level 2	Level 3	Descriptions
Tray Setting	Paper Type	MP Tray	Select the paper type that matches the paper in the MP tray.
		Tray #1	Select the paper type that matches the paper in the standard paper tray.
		Tray #2 [1]	Select the paper type that matches the paper in the Optional Tray (Tray 2).
		Tray #3 [1]	Select the paper type that matches the paper in the Optional Tray (Tray 3).
	Paper Size	MP Tray	Select the size of paper you loaded in the MP tray.
		Tray #1	Select the size of paper you loaded in the standard paper tray.
		Tray #2 [1]	Select the size of paper you loaded in the Optional Tray (Tray 2).
		Tray #3 [1]	Select the size of paper you loaded in the Optional Tray (Tray 3).
	Paper Low Notice (Available only for certain models)	Paper Low Notice	Select whether to display a message telling you that the paper tray is nearly empty.
		Notice Level	Select the minimum paper level that will trigger the message.
	Check Size	-	Select whether to display a message telling you to check that the size of the paper in the machine and the machine's Paper Size setting match.

Level 1	Level 2	Level 3	Descriptions
Tray Setting	Tray Use: Copy	-	Select the tray to be used for Copy.
	Tray Use: Fax	-	Select the tray to be used for Fax.
	Tray Use: Print	-	Select the tray to be used for Print.
	Skip Tray [1]	-	Select a specific tray you do not want to use; if it is loaded with paper of the wrong size.
	Separator Tray [1]	-	Select the tray that contains the paper used as the separator paper, which is inserted between each print job.
Volume	Ring	-	Adjust the ring volume.
	Beep	-	Adjust the beeper volume.
	Speaker	-	Adjust the speaker volume.
LCD Settings	Backlight	-	Adjust the brightness of the LCD backlight.
	Dim Timer	-	Set how long the LCD backlight stays on after you go back to your Home screen.
Screen Settings	Home Screen	-	Set the default Home screen settings.
	Copy Screen	-	Set the default Copy screen settings.
	Scan Screen	-	Set the default Scan screen settings.
Ecology	Toner Save	-	Increase the page yield of the toner cartridge.
	Sleep Time	-	Set how much time will pass before the machine enters Power Saving Mode.
	Quiet Mode	-	Decrease printing noise.
	Auto Power Off	-	Set the number of hours that the machine will remain in Deep Sleep Mode before going into Power Off Mode.
Setting Lock	Set Password	-	Restrict unauthorised users from changing the machine's settings.
	Lock Off⇒On	-	
Delete Storage	Macro ID	Macro ID XX	Delete the registered Macro data.
	Font ID	Font ID XX	Delete the registered Font data.
	Format	-	Restore the Macro and Font data of your machine to the default settings.

1 Available if the Optional Tray(s) is installed.

[All Settings] > [Shortcut Settings]

Level 1	Level 2	Descriptions
(Select shortcut button)	Rename	Change the shortcut name.
	Edit	Change the shortcut settings.
	Delete	Delete the shortcut.

[All Settings] > [Fax]

Level 1	Level 2	Level 3	Descriptions
Setup Receive	Receive Mode	-	Select the Receive Mode that best suits your needs.
	Ring Delay	-	Set the number of rings before the machine answers in Fax or Fax/Tel mode.
	F/T Ring Time	-	Set the length of the pseudo/double-ring time in Fax/Tel mode.

Level 1	Level 2	Level 3	Descriptions
Setup Receive	Fax Preview	-	View received faxes on the LCD.
	Fax Detect	-	Receive fax messages automatically when you answer a call and hear fax tones.
	Remote Codes	Remote Codes	Answer calls at an extension or external telephone and use codes to turn the machine on or off. You can personalise the codes.
		Act.Code	
		Deact.Code	
	Auto Reduction	-	Reduce the size of incoming faxes.
	PC Fax Receive	On	Set the machine to send faxes to your computer. You can turn on the Backup Print safety feature.
		Off	
	Memory Receive	Off	-
		Fax Forward	Set the machine to forward fax messages or to store incoming faxes in the memory (so you can retrieve them while you are away from your machine). If you select Fax Forward, you can turn on the Backup Print safety feature.
		Fax Storage	Store incoming faxes in the memory.
		Forward to Cloud	Forward incoming faxes to the online service.
	Fax Rx Stamp	-	Print the received time and date on the top of received faxes.
	2-sided	-	Print received faxes on both sides of the paper.
Setup Send	Batch TX	-	Combine delayed faxes to the same fax number at the same time of day into one transmission.
	Coverpage Setting	Print Sample	Print a sample of the fax cover page. You can fill in information and fax it with your document.
		Coverpage Note	Set up your own comments for the fax cover page.
	Auto Redial	-	Set the machine to redial the last fax number after five minutes if the fax did not go through because the line was busy.
	Destination	-	Set the machine to display the destination information on the LCD during fax dialling.
Report Setting	XMIT Report	-	Select the initial setup for the Transmission Verification Report.
	Journal Period	Journal Period	Set the interval for automatic printing of the Fax Journal.
		Time	If you select an option other than Off and Every 50 Faxes, you can set the time for the option.
		Day	If you select Every 7 Days, you can set the day of the week.
Print Document	-	-	Print received faxes stored in the machine's memory.
Remote Access	-	-	Set your own code for Remote Retrieval.
Dial Restriction	Dial Pad	-	Set the machine to restrict dialling when using the dial pad.
	Address Book	-	Set the machine to restrict the dialling when using the Address Book.

Level 1	Level 2	Level 3	Descriptions
Dial Restriction	Shortcuts	-	Set the machine to restrict the dialling when using a Shortcut.
	LDAP Server (MFC-L5700DN/ MFC-L5755DW Available after Internet Fax (I-Fax) is downloaded)	-	Set the machine to restrict the dialling of LDAP server numbers.
Remaining Jobs	-	-	Check which scheduled jobs are in the machine's memory and cancel selected jobs.
Miscellaneous	Distinctive (Not available in New Zealand)	On Off	Turn on the telephone company's Distinctive Ring subscriber service to register your new ring pattern on the machine.
	FaxAbility (For New Zealand)	-	If you have FaxAbility from Telecom, you can use this function to store the ringing pattern of your fax number. And if you set in to ON, you should use the registered number only.
	Call Waiting (For New Zealand)	-	If you have Call Waiting service, you can use this function to answer second call when you are on the phone and someone rings you.

[All Settings] > [Printer]

Level 1	Level 2	Level 3	Descriptions
Emulation	-	-	Select the emulation mode.
Print Options	Internal Font	HP LaserJet BR-Script 3	Print a list of the machine’s internal fonts.
	Test Print	-	Print a test page.
2-sided	2-sided Print	-	Enable or disable 2-sided printing and choose long edge or short edge.
	Single Image	-	For a print job where the last page is a 1-sided image, select the 1-sided Feed option to reduce printing time. When you use Letterhead or Preprinted paper, you must select the 2-sided Feed option. If you select 1-sided Feed for Letterhead or Preprinted paper, the last page will be printed on the reverse side.
Auto Continue	-	-	Select this setting if you want the machine to clear paper size errors or media type errors, and use paper from other trays.
Carbon Menu	Carbon Copy	-	Enable or disable the Carbon Copy function.
	Copies	-	Sets the number of printed pages.
	Copy1 Tray	-	Select the tray you use for Copy1.
	Copy1 Macro	-	Select a macro for Copy1.
	Copy2 Tray... Copy8 Tray	-	Select the tray you use for Copy2 to 8. The menu appears when printing two pages or more.
	Copy2 Macro... Copy8 Macro	-	Select a macro for Copy2 to 8. The menu appears when printing two pages or more.
HP Tray Command	-	-	Select the correct version of HP LaserJet emulation.
Reset Printer	-	-	Restore the printer settings to the factory settings.

[All Settings] > [Network]

Level 1	Level 2	Level 3	Level 4	Descriptions
Wired LAN	TCP/IP	BOOT Method	IP Boot Tries	Select the BOOT method that best suits your needs.
		IP Address	-	Enter the IP address.
		Subnet Mask	-	Enter the Subnet mask.
		Gateway	-	Enter the Gateway address.
		Node Name	-	Enter the Node name. (up to 32 characters)
		WINS Configuration	-	Select the WINS configuration mode.
		WINS Server	Primary	Specify the IP address of the primary WINS server.
			Secondary	Specify the IP address of the secondary WINS server.
		DNS Server	Primary	Specify the IP address of the primary DNS server.
			Secondary	Specify the IP address of the secondary DNS server.
		APIPA	-	Set the machine to allocate the IP address from the link-local address range automatically.
		IPv6	-	Turn the IPv6 protocol on or off. To use the IPv6 protocol, go to the Brother Solutions Center at support.brother.com for more information.
	Ethernet	-	-	Select the Ethernet link mode.
	Wired Status	-	-	View the current wired status.
	MAC Address	-	-	View the machine's MAC address.
	Set to Default	-	-	Restore the wired network settings to the factory settings.
	Wired Enable (For wireless network models)	-	-	Turn the Wired LAN on or off manually.
WLAN (For wireless network models)	TCP/IP	BOOT Method	IP Boot Tries	Select the BOOT method that best suits your needs.
		IP Address	-	Enter the IP address.
		Subnet Mask	-	Enter the Subnet mask.
		Gateway	-	Enter the Gateway address.
		Node Name	-	Enter the Node name. (up to 32 characters)
		WINS Configuration	-	Select the WINS configuration mode.
		WINS Server	Primary	Specify the IP address of the primary WINS server.
			Secondary	Specify the IP address of the secondary WINS server.

Level 1	Level 2	Level 3	Level 4	Descriptions
WLAN (For wireless network models)	**TCP/IP**	**DNS Server**	**Primary**	Specify the IP address of the primary DNS server.
			Secondary	Specify the IP address of the secondary DNS server.
		APIPA	-	Set the machine to allocate the IP address from the link-local address range automatically.
		IPv6	-	Turn the IPv6 protocol on or off. To use the IPv6 protocol, go to the Brother Solutions Center at support.brother.com for more information.
	Setup Wizard	-	-	Configure the wireless network settings using the setup wizard.
	WLAN Assistant	-	-	Configure your wireless network settings using the Brother CD-ROM.
	WPS	-	-	Configure your wireless network settings using the one-button push method.
	WPS w/ PIN Code	-	-	Configure your wireless network settings using WPS with a PIN.
	WLAN Status	**Status**	-	View the current wireless network status.
		Signal	-	View the current wireless network signal strength.
		SSID	-	View the current SSID.
		Comm. Mode	-	View the current Communication Mode.
	MAC Address	-	-	View the machine's MAC address.
	Set to Default	-	-	Restore the wireless network settings to the factory settings.
	WLAN Enable	-	-	Turns the wireless interface on or off.
Wi-Fi Direct (For wireless network models)	**Push Button**	-	-	Configure your Wi-Fi Direct network settings using the one-button push method.
	PIN Code	-	-	Configure your Wi-Fi Direct network settings using WPS with a PIN code.
	Manual	-	-	Configure your Wi-Fi Direct network settings manually.
	Group Owner	-	-	Set your machine as the Group Owner.
	Device Information	**Device Name**	-	View your machine's device name.
		SSID	-	View the Group Owner's SSID. When the machine is not connected, the LCD displays Not Connected.

Level 1	Level 2	Level 3	Level 4	Descriptions
Wi-Fi Direct (For wireless network models)	**Device Information**	**IP Address**	-	View your machine's current IP Address.
	Status Information	**Status**	-	View the current Wi-Fi Direct network status.
		Signal	-	View the current Wi-Fi Direct network signal strength. When your machine acts as Group Owner, the LCD always indicates a strong signal.
	I/F Enable	-	-	Turn the Wi-Fi Direct connection on or off.
NFC (Available only for certain models)	-	-	-	Turn the NFC function on or off.
E-mail/IFAX (MFC-L5700DN/ MFC-L5755DW Available after Internet Fax (I-Fax) is downloaded)	**Mail Address**	-	-	Enter the email address. (Up to 60 characters)
	Setup Server	**SMTP**	**Server**	Enter the SMTP server name and address.
			Port	Enter the SMTP port number.
			Auth. for SMTP	Select the Security method for email notification.
			SSL/TLS	Send or receive an email via an email server that requires secure SSL/TLS communication.
			Verify Cert.	Verify the SMTP Server Certificate automatically.
		POP3/IMAP4	**Protocol**	Select the protocol for receiving an email from the server.
			Server	Enter the server name and address.
			Port	Enter the port number.
			Mailbox Name	Enter the mailbox name. (Up to 60 characters)
			Mailbox Password	Enter the password to login to the server. (Up to 32 characters)
			Select Folder	Select the specified folder in the mailbox using the IMAP4 protocol.
			SSL/TLS	Send or receive an email via an email server that requires secure SSL/TLS communication.
			Verify Cert.	Verify the SMTP Server Certificate automatically.
			APOP	Turn APOP on or off.
	Setup Mail RX	**Auto Polling**	**Auto Polling**	Check the server for new messages automatically.
			Poll Frequency	Set the interval for checking new messages on the server.

Level 1	Level 2	Level 3	Level 4	Descriptions
E-mail/IFAX (MFC-L5700DN/ MFC-L5755DW Available after Internet Fax (I-Fax) is downloaded)	Setup Mail RX	Header	-	Select the contents of the email header to be printed.
		Del/Read Error Mail	-	The POP3 server deletes error emails automatically. The IMAP4 server deletes error emails automatically after you read them.
		Notification	-	Receive notification messages.
	Setup Mail TX	Sender Subject	-	View the subject.
		Size Limit	Size Limit	Limit the size of email documents.
			Maximum Size(MB)	
		Notification	-	Send notification messages.
	Setup Relay	Relay Broadcast	-	Relay a document to another fax machine.
		Relay Domain	Relay XX	Register the Domain name.
		Relay Report	-	Print the relay Broadcast Report.
	Manual Receive	-	-	Check the POP3 or IMAP4 server for new messages manually.
Web Connect Settings	Proxy Settings	Proxy Connection	-	Change the Web connection settings.
		Address	-	
		Port	-	
		User Name	-	
		Password	-	
Fax to Server (MFC-L5700DN/ MFC-L5755DW Available after Internet Fax (I-Fax) is downloaded)	Fax to Server	-	-	Select the network connection type.
	Prefix	-	-	
	Suffix	-	-	
Security	IPsec	-	-	IPsec is an optional security feature of the IP protocol that provides authentication and encryption services. We recommend contacting your network administrator before changing this setting.
Network Reset	-	-	-	Restore all network settings back to the factory settings.

[All Settings] > [Print Reports]

Level 1	Level 2	Descriptions
XMIT Verify	View on LCD	Display a Transmission Verification Report of your last transmission.
	Print Report	Print a Transmission Verification Report of your last transmission.
Address Book	-	Print a list of names and numbers stored in the Address Book.
Fax Journal	-	Print a list of information about your last 200 incoming and outgoing faxes. (TX means Transmit. RX means Receive.)

Level 1	Level 2	Descriptions
User Settings	-	Print a list of your settings.
Printer Settings	-	Print a list of your Printer settings.
Network Configuration	-	Print a list of your Network settings.
Print File List	-	Print a list of data saved in the machine's memory.
Drum Dot Print	-	Print the Drum Dot Check Sheet.
WLAN Report (For wireless network models)	-	Print the wireless LAN connection results.

[All Settings] > [Machine Info.]

Level 1	Level 2	Descriptions
Serial No.	-	Check your machine's serial number.
Firmware Version	Main Version	Check your machine's firmware version.
	Sub1 Version	
Page Counter	Total	Check the number of the pages the machine has printed.
	Fax	
	Copy	
	Print	
	Other	
Parts Life [1]	Drum	Display the remaining life of the drum unit.
	Fuser	Display the remaining life of the fuser unit.
	Laser Unit	Display the remaining life of the laser unit.
	PF Kit MP	Display the remaining life of the PF kit MP.
	PF Kit 1	Display the remaining life of the PF Kit 1.
	PF Kit 2 [2]	Display the remaining life of the PF Kit 2.
	PF Kit 3 [2]	Display the remaining life of the PF Kit 3.

1 Life is approximate and may vary by type of use.

2 Available if the Optional Tray(s) is installed.

[All Settings] > [Initial Setup]

Level 1	Level 2	Descriptions
Date & Time	Date	Add the date and time on the screen and in the headings of the faxes you send.
	Time	
	Time Zone	Set your time zone.
Station ID	Fax	Enter your name and fax number so it appears on each page you fax.
	Tel	
	Name	
Tone/Pulse (Not available in New Zealand)	-	Select the dialling mode.
Dial Tone	-	Shorten the dial tone detect pause.
Dial Prefix	-	Set a prefix number to always be added before the fax number every time you dial.

Level 1	Level 2	Descriptions
Compatibility	-	Adjust the equalisation for transmission difficulties. VoIP service providers offer fax support using various standards. If you regularly experience fax transmission errors, select Basic (for VoIP).
Reset	**Machine Reset**	Restore all the machine settings that you have changed, such as Date and Time.
	Network	Restore all network settings back to the factory settings.
	Address Book & Fax	Erase all stored phone numbers and fax settings.
	All Settings	Restore all the machine's settings back to the factory settings.
	Factory Reset	Restore all settings back to the factory settings.
Local Language (Available only for some countries)	-	Change your LCD language.

Related Information

- Settings and Features Tables

Settings Tables (DCP models)

Related Models: DCP-L5600DN

[Settings]

Level 1	Level 2	Descriptions
	Date & Time	Access the Date and Time setting menus.
Toner	Toner Life	View the approximate remaining toner life.
	Test Print	Print a test page.
Network	Wired LAN (For network models)	Access the Wired LAN setting menus.
	WLAN (For wireless network models)	Access the WLAN setting menus.
Screen Settings	-	Access the default screen setting menus.
Wi-Fi Direct (For wireless network models)	-	Access the Wi-Fi Direct setting menus.
Beep Volume (Available only for certain models)	-	Access the beep volume setting menus.
Tray Setting	-	Access the tray setting menus.
All Settings	-	Configure the detailed settings.

[All Settings] > [General Setup]

Level 1	Level 2	Level 3	Descriptions
Tray Setting	Paper Type	MP Tray	Select the paper type that matches the paper in the MP tray.
		Tray #1	Select the paper type that matches the paper in the standard paper tray.
		Tray #2 [1]	Select the paper type that matches the paper in the Optional Tray (Tray 2).
		Tray #3 [1]	Select the paper type that matches the paper in the Optional Tray (Tray 3).
	Paper Size	MP Tray	Select the size of paper you loaded in the MP tray.
		Tray #1	Select the size of paper you loaded in the standard paper tray.
		Tray #2 [1]	Select the size of paper you loaded in the Optional Tray (Tray 2).
		Tray #3 [1]	Select the size of paper you loaded in the Optional Tray (Tray 3).
	Paper Low Notice (Available only for certain models)	Paper Low Notice	Select whether to display a message telling you that the paper tray is nearly empty.
		Notice Level	Select the minimum paper level that will trigger the message.

Level 1	Level 2	Level 3	Descriptions
Tray Setting	Check Size	-	Select whether to display a message telling you to check that the size and type of the paper in the machine and the machine's Paper Size and Paper Type settings match.
	Tray Use: Copy	-	Select the tray to be used for Copy.
	Tray Use: Print	-	Select the tray to be used for Print.
	Skip Tray [1]	-	Select a specific tray you do not want to use; if it is loaded with paper of the wrong size.
	Separator Tray [1]	-	Select the tray that contains the paper used as the separator paper, which is inserted between each print job.
Volume	Beep	-	Adjust the beeper volume.
LCD Settings	Backlight	-	Adjust the brightness of the LCD backlight.
	Dim Timer	-	Set how long the LCD backlight stays on after you go back to your Home screen.
Screen Settings	Home Screen	-	Set the default Home screen settings.
	Copy Screen	-	Set the default Copy screen settings.
	Scan Screen	-	Set the default Scan screen settings.
Ecology	Toner Save	-	Increase the page yield of the toner cartridge.
	Sleep Time	-	Set how much time will pass before the machine enters Power Saving Mode.
	Quiet Mode	-	Decrease printing noise.
	Auto Power Off	-	Sets the number of hours that the machine will remain in Deep Sleep Mode before going into Power Off Mode.
Setting Lock	Set Password	-	Restrict unauthorised users from changing the machine’s settings.
	Lock Off⇒On	-	
Delete Storage	Macro ID	Macro ID XX	Delete the registered Macro data.
	Font ID	Font ID XX	Delete the registered Font data.
	Format	-	Restore the Macro and Font data of your machine to the default settings.

[1] Available if the Optional Tray(s) is installed.

[All Settings] > [Shortcut Settings]

Level 1	Level 2	Descriptions
(Select shortcut button)	Rename	Change the shortcut name.
	Edit	Change the shortcut settings.
	Delete	Delete the shortcut.

[All Settings] > [Printer]

Level 1	Level 2	Level 3	Descriptions
Emulation	-	-	Select the emulation mode.
Print Options	Internal Font	HP LaserJet	Print a list of the machine’s internal fonts.
		BR-Script 3	
	Test Print	-	Print a test page.
2-sided	2-sided Print	-	Enable or disable 2-sided printing and choose long edge or short edge.

Level 1	Level 2	Level 3	Descriptions
2-sided	Single Image	-	For a print job where the last page is a 1-sided image, select the 1-sided Feed option to reduce printing time. When you use Letterhead or Preprinted paper, you must select the 2-sided Feed option. If you select 1-sided Feed for Letterhead or Preprinted paper, the last page will be printed on the reverse side.
Auto Continue	-	-	Select this setting if you want the machine to clear paper size errors or media type errors, and use paper from other trays.
Carbon Menu	Carbon Copy	-	Enable or disable the Carbon Copy function.
	Copies	-	Sets the number of printed pages.
	Copy1 Tray	-	Select the tray you use for Copy1.
	Copy1 Macro	-	Select a macro for Copy1.
	Copy2 Tray... Copy8 Tray	-	Select the tray you use for Copy2 to 8. The menu appears when printing two pages or more.
	Copy2 Macro... Copy8 Macro	-	Select a macro for Copy2 to 8. The menu appears when printing two pages or more.
HP Tray Command	-	-	Select the correct version of HP LaserJet emulation.
Reset Printer	-	-	Restore the printer settings to the factory settings.

[All Settings] > [Network]

Level 1	Level 2	Level 3	Level 4	Descriptions
Wired LAN (For network models)	TCP/IP	BOOT Method	IP Boot Tries	Select the BOOT method that best suits your needs.
		IP Address	-	Enter the IP address.
		Subnet Mask	-	Enter the Subnet mask.
		Gateway	-	Enter the Gateway address.
		Node Name	-	Enter the Node name. (up to 32 characters)
		WINS Configuration	-	Select the WINS configuration mode.
		WINS Server	Primary	Specify the IP address of the primary WINS server.
			Secondary	Specify the IP address of the secondary WINS server.
		DNS Server	Primary	Specify the IP address of the primary DNS server.
			Secondary	Specify the IP address of the secondary DNS server.
		APIPA	-	Set the machine to allocate the IP address from the link-local address range automatically.
		IPv6	-	Turn the IPv6 protocol on or off. To use the IPv6 protocol, go to the Brother Solutions Center at support.brother.com for more information.
	Ethernet	-	-	Select the Ethernet link mode.

Level 1	Level 2	Level 3	Level 4	Descriptions
Wired LAN (For network models)	**Wired Status**	-	-	View the current wired status.
	MAC Address	-	-	View the machine's MAC address.
	Set to Default	-	-	Restore the wired network settings to the factory settings.
	Wired Enable (For wireless network models)	-	-	Turn the Wired LAN on or off manually.
WLAN (For wireless network models)	**TCP/IP**	**BOOT Method**	**IP Boot Tries**	Select the BOOT method that best suits your needs.
		IP Address	-	Enter the IP address.
		Subnet Mask	-	Enter the Subnet mask.
		Gateway	-	Enter the Gateway address.
		Node Name	-	Enter the Node name. (up to 32 characters)
		WINS Configuration	-	Select the WINS configuration mode.
		WINS Server	**Primary**	Specify the IP address of the primary WINS server.
			Secondary	Specify the IP address of the secondary WINS server.
		DNS Server	**Primary**	Specify the IP address of the primary DNS server.
			Secondary	Specify the IP address of the secondary DNS server.
		APIPA	-	Set the machine to allocate the IP address from the link-local address range automatically.
		IPv6	-	Turn the IPv6 protocol on or off. To use the IPv6 protocol, go to the Brother Solutions Center at support.brother.com for more information.
	Setup Wizard	-	-	Configure the wireless network settings using the setup wizard.
	WLAN Assistant	-	-	Configure your wireless network settings using the Brother CD-ROM.
	WPS	-	-	Configure your wireless network settings using the one-button push method.
	WPS w/ PIN Code	-	-	Configure your wireless network settings using WPS with a PIN.
	WLAN Status	**Status**	-	View the current wireless network status.
		Signal	-	View the current wireless network signal strength.
		SSID	-	View the current SSID.
		Comm. Mode	-	View the current Communication Mode.

Level 1	Level 2	Level 3	Level 4	Descriptions
WLAN (For wireless network models)	**MAC Address**	-	-	View the machine's MAC address.
	Set to Default	-	-	Restore the wireless network settings to the factory settings.
	WLAN Enable	-	-	Turns the wireless interface on or off.
Wi-Fi Direct (For wireless network models)	**Push Button**	-	-	Configure your Wi-Fi Direct network settings using the one-button push method.
	PIN Code	-	-	Configure your Wi-Fi Direct network settings using WPS with a PIN code.
	Manual	-	-	Configure your Wi-Fi Direct network settings manually.
	Group Owner	-	-	Set your machine as the Group Owner.
	Device Information	**Device Name**	-	View your machine's device name.
		SSID	-	View the Group Owner's SSID. When the machine is not connected, the LCD displays Not Connected.
		IP Address	-	View your machine's current IP Address.
	Status Information	**Status**	-	View the current Wi-Fi Direct network status.
		Signal	-	View the current Wi-Fi Direct network signal strength. When your machine acts as Group Owner, the LCD always indicates a strong signal.
	I/F Enable	-	-	Turn the Wi-Fi Direct connection on or off.
NFC (Available only for certain models)	-	-	-	Turn the NFC function on or off.
E-mail (DCP-L5600DN : Available after Scan to Email Server is downloaded)	**Mail Address**	-	-	Enter the email address.
	Setup Server	**SMTP**	**Server**	Enter the SMTP server name and address.
			Port	Enter the port number.
			Auth. for SMTP	Select the Security method for email notification.
			SSL/TLS	Send or receive an email via an email server that requires secure SSL/TLS communication.
			Verify Cert.	Verify the SMTP Server Certificate automatically.
	Setup Mail TX	**Sender Subject**	-	View the subject.
		Size Limit	**Size Limit**	Limit the size of email documents.
			Maximum Size(MB)	

Level 1	Level 2	Level 3	Level 4	Descriptions
E-mail (DCP-L5600DN : Available after Scan to Email Server is downloaded)	Setup Mail TX	Notification	-	Send notification messages.
Web Connect Settings (For network models)	Proxy Settings	Proxy Connection	-	Change the Web connection settings.
		Address	-	
		Port	-	
		User Name	-	
		Password	-	
Security	IPsec	-	-	IPsec is an optional security feature of the IP protocol that provides authentication and encryption services. We recommend contacting your network administrator before changing this setting.
Network Reset	-	-	-	Restore all network settings back to the factory settings.

[All Settings] > [Print Reports]

Level 1	Level 2	Descriptions
Address Book (DCP-L5600DN : Available after Scan to Email Server is downloaded)	-	Print a list of names and numbers stored in the Address Book.
Journal Report (DCP-L5600DN : Available after Scan to Email Server is downloaded)	-	Print a list of information about your last 200 outgoing emails.
User Settings	-	Print a list of your settings.
Printer Settings	-	Print a list of your Printer settings.
Network Configuration (For network models)	-	Print a list of your Network settings.
Print File List	-	Print a list of data saved in the machine's memory.
Drum Dot Print	-	Print the Drum Dot Check Sheet.
WLAN Report (For wireless network models)	-	Print the wireless LAN connection results.

[All Settings] > [Machine Info.]

Level 1	Level 2	Descriptions
Serial No.	-	Check your machine's serial number.
Firmware Version	Main Version	Check your machine's firmware version.
	Sub1 Version	
Page Counter	Total	Check the number of the pages the machine has printed.
	Copy	
	Print	
	Other	

Level 1	Level 2	Descriptions
Parts Life [1]	Drum	Display the remaining life of the drum unit.
	Fuser	Display the remaining life of the fuser unit.
	Laser Unit	Display the remaining life of the laser unit.
	PF Kit MP	Display the remaining life of the PF kit MP.
	PF Kit 1	Display the remaining life of the PF Kit 1.
	PF Kit 2 [2]	Display the remaining life of the PF Kit 2.
	PF Kit 3 [2]	Display the remaining life of the PF Kit 3.

1 Life is approximate and may vary by type of use.

2 Available if the Optional Tray(s) is installed.

[All Settings] > [Initial Setup]

Level 1	Level 2	Descriptions
Date & Time	Date	Add the date and time on the screen.
	Time	
	Time Zone	Set your time zone.
Reset	Machine Reset	Restore all the machine settings that you have changed, such as Date and Time.
	Network (For network models)	Restore all network settings back to the factory settings.
	Address Book (DCP-L5600DN : Available after Scan to Email Server is downloaded)	Erase all stored phone numbers.
	All Settings	Restore all the machine's settings back to the factory settings.
	Factory Reset	Restore all settings back to the factory settings.
Local Language (Available only for some countries)	-	Change your LCD language.

Related Information

- Settings and Features Tables

Features Tables (MFC models)

Related Models: MFC-L5700DN/MFC-L5755DW/MFC-L5900DW/MFC-L6700DW/MFC-L6900DW

[Toner]

Level 1	Descriptions
Toner Life	View the approximate remaining toner life.
Test Print	Print a test page.

[Fax] (When Fax Preview is Off)

Level 1	Level 2	Level 3	Level 4	Descriptions
Redial(Pause)	-	-	-	Redial the last number called. When you are entering a fax or telephone number on the Touchpanel, Redial changes to Pause on the LCD. Press Pause when you need a delay while dialling numbers, such as access codes and credit card numbers. You can also store a pause when you set up addresses.
Hook	-	-	-	Press before dialling if you want to listen to make sure a fax machine has answered, and then press Fax Start.
Address Book	(Search:)	-	-	Search within the Address Book.
	Edit	Add New Address	Name	Store Address Book numbers, set up Group numbers for Broadcasting, change and delete Address Book numbers.
			Address	
		Setup Groups	Name	
			Add/ Delete	
		Change	(Select Address)	
		Delete	(Select Address)	
	(Select Address Book)	Apply	-	Start sending a fax using the Address Book.
Call History	Outgoing Call	(Select Outgoing Call)	Apply	Select a number from the Outgoing Call history and then send a fax to it, add it to the Address Book, or delete it.
			Edit	
Fax Start	-	-	-	Send a fax.
Options	Fax Resolution	-	-	Set the resolution for outgoing faxes.
	2-sided Fax (For automatic 2-sided scanning models)	-	-	Set the 2-sided scanning format.
	Contrast	-	-	Adjust the contrast.

Level 1	Level 2	Level 3	Level 4	Descriptions
Options	Broadcasting	Add Number	Add Number	Send the same fax message to more than one fax number.
			Add from Address book	
			Search in Address book	
	Delayed Fax	Delayed Fax	-	Set the time of day the delayed faxes will be sent.
		Set Time	-	
	Real Time TX	-	-	Send a fax without using the memory.
	Coverpage Setup	Coverpage Setup	-	Set the machine to automatically send a cover page that you have pre-programmed.
		Coverpage Note	-	
		Total Pages	-	
	Overseas Mode	-	-	Set to On if you have difficulty sending faxes overseas.
	Glass Scan Size	-	-	Adjust the scan area of the scanner glass to the size of the document.
	Set New Default	-	-	Save your settings as the default.
	Factory Reset	-	-	Restore all settings back to the factory settings.
Save as Shortcut	-	-	-	Save the current settings as a shortcut.

[Fax] (When Fax Preview is On)

Level 1	Level 2	Level 3	Level 4	Descriptions
Sending Faxes	Redial(Pause)	-	-	Redial the last number called. When you are entering a fax or telephone number on the Touchpanel, Redial changes to Pause on the LCD. Press Pause when you need a delay while dialling numbers, such as access codes and credit card numbers. You can also store a pause when you set up addresses.
	Hook	-	-	Press before dialling if you want to listen to make sure a fax machine has answered, and then press Fax Start.
	Address Book	-	-	Select the address of the recipient from the address book.
	Call History	-	-	Select a number from the Outgoing Call history and then send a fax to it, add it to the Address Book, or delete it.
	Fax Start	-	-	Send a fax.
	Options	-	-	Select your settings.
	Save as Shortcut	-	-	Save the current settings as a shortcut.
Received Faxes	Print/Delete	Print All(New Faxes)	-	Print the new received faxes.

Level 1	Level 2	Level 3	Level 4	Descriptions
Received Faxes	Print/Delete	Print All(Old Faxes)	-	Print the old received faxes.
		Delete All(New Faxes)	-	Delete the new received faxes.
		Delete All(Old Faxes)	-	Delete the old received faxes.
Address Book	-	-	-	Select the address of the recipient from the address book.
Call History	-	-	-	Select a number from the Outgoing Call history and then send a fax to it, add it to the Address Book, or delete it.

[Copy]

Level 1	Level 2	Level 3	Descriptions
Start	-	-	Make a monochrome or greyscale copy.
Quick Copy	Receipt	Start	Set the preset copy settings of Receipt.
		Quick Copy	
		Options	
	Normal	Start	Set the preset copy settings of Normal.
		Quick Copy	
		Options	
	2in1(ID)	Start	Set the preset copy settings of 2in1(ID).
		Quick Copy	
		Options	
	2in1	Start	Set the preset copy settings of 2in1.
		Quick Copy	
		Options	
	2sided(1⇒2)	Start	Set the preset copy settings of 2-sided(1⇒2).
		Quick Copy	
		Options	
	2sided(2⇒2)	Start	Set the preset copy settings of 2-sided(2⇒2).
		Quick Copy	
		Options	
	Paper Save	Start	Set the preset copy settings of Paper Save.
		Quick Copy	
		Options	
	Start	-	Start Copying.
	Options	-	Select your settings.
Options	Quality	-	Select the Copy resolution for your document type.
	Enlarge/Reduce	100%	-
		Enlarge	Select an enlargement ratio for the next copy.

Level 1	Level 2	Level 3	Descriptions
Options	Enlarge/Reduce	Reduce	Select a reduction ratio for the next copy.
		Auto	Adjusts the copy size to fit on the paper size you have set.
		Custom(25-400%)	Enter an enlargement or reduction ratio.
	Density	-	Adjust the density.
	Contrast	-	Adjust the contrast.
	Stack/Sort	-	Select to stack or sort multiple copies.
	Page Layout	-	Make N in 1 and 2 in 1 ID copies.
	2-sided Copy	Layout	Turn off or turn on 2-sided copying and select flip on long edge or flip on short edge.
	2-sided Copy Page Layout	-	Select a page layout option when you make 2-sided N in 1 copies from a 2-sided document.
	Tray Use	-	Select the tray that will be used.
	Save as Shortcut	-	Save the current settings as a shortcut.

[Scan]

Level 1	Level 2	Level 3	Descriptions
to OCR	Scan Actions	-	Convert your scanned document to an editable text file.
	(Select USB or PC)	Options	
		Save as Shortcut	
		Start	
to File	Scan Actions	-	Scan documents and save them to a folder on your computer.
	(Select USB or PC)	Options	
		Save as Shortcut	
		Start	
to Image	Scan Actions	-	Scan photos or graphics into your graphics applications.
	(Select USB or PC)	Options	
		Save as Shortcut	
		Start	
to USB	Scan Actions	-	Scan documents to a USB Flash memory drive.
	Options	2-sided Scan (For automatic 2-sided scanning models)	
		Scan Type	
		Resolution	
		File Type	
		Document Size	
		File Name	
		File Name Style	
		File Size	

Level 1	Level 2	Level 3	Descriptions
to USB	Options	Brightness	Scan documents to a USB Flash memory drive.
		Contrast	
		ADF Auto Deskew	
		Skip Blank Page	
		Remove Background Colour	
		Set New Default	
		Factory Reset	
	Save as Shortcut	-	
	Start	-	
to E-mail	Scan Actions	-	Send a scanned document as an email attachment.
	(Select USB or PC)	Options	
		Save as Shortcut	
		Start	
to E-mail Server (MFC-L5700DN/ MFC-L5755DW Available after Scan to Email Server is downloaded)	Scan Actions	-	Scan a monochrome or a colour document to your email server.
	Cancel	-	
	Address Book	(Search:)	
		Edit	
		(Select Address Book)	
	Manual	-	
	Next	Destinations	
		Options	
		Save as Shortcut	
		Start	
	Destinations	(Select Address)	
to FTP/SFTP	Scan Actions	-	Send scanned data via FTP/SFTP.
	(Select Profile name)	Options	
		Save as Shortcut	
		Start	
to Network	Scan Actions	-	Send scanned data to a CIFS server on your local network or on the Internet.
	(Select Profile name)	Options	
		Save as Shortcut	
		Start	
to SharePoint	Scan Actions	-	Send scanned data via a SharePoint server.
	(Select Profile name)	Options	
		Save as Shortcut	

Level 1	Level 2	Level 3	Descriptions
to SharePoint	(Select Profile name)	Start	Send scanned data via a SharePoint server.
to Web	-	-	Upload the scanned data to an Internet service.
WS Scan (Appears when you install a Web Services Scanner, which is displayed in your computer's Network explorer.)	Scan	-	Scan data using the Web Service protocol.
	Scan for E-mail	-	
	Scan for Fax	-	
	Scan for Print	-	

(Wi-Fi® Setup)

For wireless network models

After the Wi-Fi® is set up, you cannot change the settings from your Home screen. Change the settings for Wi-Fi® in the Settings screen.

Level 1	Descriptions
Setup Wizard	Configure the wireless network settings using the setup wizard.
WLAN Assistant	Configure your wireless network settings using the Brother CD-ROM.
WPS	Configure your wireless network settings using the one-button push method.

[Shortcuts]

Level 1	Level 2	Level 3	Level 4	Descriptions
Add Shortcut	Copy	Receipt	-	Select the settings you want.
		Normal	-	
		2in1(ID)	-	
		2in1	-	
		2-sided(1⇒2)	-	
		2-sided(2⇒2)	-	
		Paper Save	-	
	Fax	-	-	Select the settings you want.
	Scan	to File	(Select PC)	Scan a monochrome or a colour document to your computer.
		to OCR	(Select PC)	Convert your scanned document to an editable text file.
		to Image	(Select PC)	Scan a colour picture into your graphics application.
		to USB	Options	Scan documents to a USB Flash memory drive.
			Save as Shortcut	
		to E-mail	(Select PC)	Scan a monochrome or a colour document into your email application.
		to E-mail Server (MFC-L5700DN/ MFC-L5755DW Available after Scan to	Scan Actions	Scan a monochrome or a colour document to your email server.
			Address Book	
			Manual	

Level 1	Level 2	Level 3	Level 4	Descriptions
Add Shortcut	**Scan**	Email Server is downloaded)	**Destinations**	Scan a monochrome or a colour document to your email server.
			Next	
		to Network	(Select Profile name)	Send scanned data to a CIFS server on your local network or on the Internet.
		to FTP/SFTP	(Select Profile name)	Send scanned data via FTP/SFTP.
		to SharePoint	(Select Profile name)	Send scanned data via a SharePoint server.
	Web	-	-	Connect the Brother machine to an Internet service. Web services may have been added and service names may have been changed by the provider since this document was published. Go to your model's **Manuals** page on the Brother Solutions Center at support.brother.com to download the Web Connect Guide.
	Apps	-	-	Connect the Brother machine to the Brother Apps service.
These lists appears when each Shortcut name is pressed for two seconds.	**Rename**	-	-	Change the shortcut name.
	Edit	-	-	Change the shortcut settings.
	Delete	-	-	Delete the shortcut.

[Secure Print]

Level 1	Level 2	Level 3	Descriptions
Secure Print	(Select User)	(Select Secure Print Job)	You can print data saved in the machine's memory when you enter your four-digit password. Active only when the machine has secure print data.

[Web]

Level 1	Descriptions
Web	Connect the Brother machine to an Internet service.

[Apps]

Level 1	Descriptions
Apps	Connect the Brother machine to the Brother Apps service.

[USB]

Level 1	Level 2	Descriptions
USB	Scan to USB	Scan documents to a USB Flash memory drive.
	Direct Print	Print the data directly from the USB flash drive.

[2 in 1 ID Copy]

Level 1	Descriptions
2 in 1 ID Copy	Copy both sides of an identification card onto one page.

Related Information

- Settings and Features Tables

Features Tables (DCP models)

Related Models: DCP-L5600DN

[Toner]

Level 1	Descriptions
Toner Life	View the approximate remaining toner life.
Test Print	Print a test page.

[Copy]

Level 1	Level 2	Level 3	Descriptions
Start	-	-	Make a monochrome or greyscale copy.
Quick Copy	Receipt	Start	Set the preset copy settings of Receipt.
		Quick Copy	
		Options	
	Normal	Start	Set the preset copy settings of Normal.
		Quick Copy	
		Options	
	2in1(ID)	Start	Set the preset copy settings of 2in1(ID).
		Quick Copy	
		Options	
	2in1	Start	Set the preset copy settings of 2in1.
		Quick Copy	
		Options	
	2sided(1⇒2)	Start	Set the preset copy settings of 2-sided(1⇒2).
		Quick Copy	
		Options	
	2sided(2⇒2)	Start	Set the preset copy settings of 2-sided(2⇒2).
		Quick Copy	
		Options	
	Paper Save	Start	Set the preset copy settings of Paper Save.
		Quick Copy	
		Options	
	Start	-	Start Copying.
	Options	-	Select your settings.
Options	Quality	-	Select the Copy resolution for your document type.
	Enlarge/Reduce	100%	-
		Enlarge	Select an enlargement ratio for the next copy.
		Reduce	Select a reduction ratio for the next copy.

Level 1	Level 2	Level 3	Descriptions
Options	Enlarge/Reduce	Auto	Adjusts the copy size to fit on the paper size you have set.
		Custom(25-400%)	Enter an enlargement or reduction ratio.
	Density	-	Adjust the density.
	Contrast	-	Adjust the contrast.
	Stack/Sort	-	Select to stack or sort multiple copies.
	Page Layout	-	Make N in 1 and 2 in 1 ID copies.
	2-sided Copy	Layout	Turn off or turn on 2-sided copying and select flip on long edge or flip on short edge.
	2-sided Copy Page Layout	-	Select a page layout option when you make 2-sided N in 1 copies from a 2-sided document.
	Tray Use	-	Select the tray that will be used.
	Save as Shortcut	-	Save the current settings as a shortcut.

[Scan]

Level 1	Level 2	Level 3	Descriptions
to OCR	Scan Actions	-	Convert your scanned document to an editable text file.
	(Select USB or PC)	Options	
		Save as Shortcut	
		Start	
to File	Scan Actions	-	Scan documents and save them to a folder on your computer.
	(Select USB or PC)	Options	
		Save as Shortcut	
		Start	
to Image	Scan Actions	-	Scan photos or graphics into your graphics applications.
	(Select USB or PC)	Options	
		Save as Shortcut	
		Start	
to USB	Scan Actions	-	Scan documents to a USB Flash memory drive.
	Options	2-sided Scan (For automatic 2-sided scanning models)	
		Scan Type	
		Resolution	
		File Type	
		Document Size	
		File Name	
		File Name Style	
		File Size	
		Brightness	

Level 1	Level 2	Level 3	Descriptions
to USB	Options	Contrast	Scan documents to a USB Flash memory drive.
		ADF Auto Deskew	
		Skip Blank Page	
		Remove Background Colour	
		Set New Default	
		Factory Reset	
	Save as Shortcut	-	
	Start	-	
to E-mail	Scan Actions	-	Send a scanned document as an email attachment.
	(Select USB or PC)	Options	
		Save as Shortcut	
		Start	
to E-mail Server (DCP-L5600DN : Available after Scan to Email Server is downloaded)	Scan Actions	-	Scan a monochrome or a colour document to your email server.
	Cancel	-	
	Address Book	(Search:)	
		Edit	
		(Select Address Book)	
	Manual	-	
	Next	Destinations	
		Options	
		Save as Shortcut	
		Start	
	Destinations	(Select Address)	
to FTP/SFTP	Scan Actions	-	Send scanned data via FTP/SFTP.
	(Select Profile name)	Options	
		Save as Shortcut	
		Start	
to Network	Scan Actions	-	Send scanned data to a CIFS server on your local network or on the Internet.
	(Select Profile name)	Options	
		Save as Shortcut	
		Start	
to SharePoint	Scan Actions	-	Send scanned data via a SharePoint server.
	(Select Profile name)	Options	
		Save as Shortcut	
		Start	

Level 1	Level 2	Level 3	Descriptions
to Web	-	-	Upload the scanned data to an Internet service.
WS Scan (Appears when you install a Web Services Scanner, which is displayed in your computer's Network explorer.)	Scan	-	Scan data using the Web Service protocol.
	Scan for E-mail	-	
	Scan for Fax	-	
	Scan for Print	-	

(Wi-Fi® Setup)

For wireless network models

After the Wi-Fi® is set up, you cannot change the settings from your Home screen. Change the settings for Wi-Fi® in the Settings screen.

Level 1	Descriptions
Setup Wizard	Configure the wireless network settings using the setup wizard.
WLAN Assistant	Configure your wireless network settings using the Brother CD-ROM.
WPS	Configure your wireless network settings using the one-button push method.

[Shortcuts]

Level 1	Level 2	Level 3	Level 4	Descriptions
Add Shortcut	Copy	Receipt	-	Select the settings you want.
		Normal	-	
		2in1(ID)	-	
		2in1	-	
		2-sided(1⇒2)	-	
		2-sided(2⇒2)	-	
		Paper Save	-	
	Scan	to File	(Select PC)	Scan a monochrome or a colour document to your computer.
		to OCR	(Select PC)	Convert your scanned document to an editable text file.
		to Image	(Select PC)	Scan a picture into your graphics application.
		to USB	Options	Scan documents to a USB Flash memory drive.
			Save as Shortcut	
		to E-mail	(Select PC)	Scan a monochrome or a colour document into your email application.
		to E-mail Server (DCP-L5600DN : Available after Scan to Email Server is downloaded)	Scan Actions	Scan a monochrome or a colour document to your email server.
			Address Book	
			Manual	
			Destinations	
			Next	

Level 1	Level 2	Level 3	Level 4	Descriptions
Add Shortcut	**Scan**	**to Network**	(Select Profile name)	Send scanned data to a CIFS server on your local network or on the Internet.
		to FTP/SFTP	(Select Profile name)	Send scanned data via FTP/SFTP.
		to SharePoint	(Select Profile name)	Send scanned data via a SharePoint server.
	Web	-	-	Connect the Brother machine to an Internet service. Web services may have been added and service names may have been changed by the provider since this document was published. Go to your model's **Manuals** page on the Brother Solutions Center at support.brother.com to download the Web Connect Guide.
	Apps	-	-	Connect the Brother machine to the Brother Apps service.
These lists appears when each Shortcut name is pressed for two seconds.	**Rename**	-	-	Change the shortcut name.
	Edit	-	-	Change the shortcut settings.
	Delete	-	-	Delete the shortcut.

[Secure Print]

Level 1	Level 2	Level 3	Descriptions
Secure Print	(Select User)	(Select Secure Print Job)	You can print data saved in the machine's memory when you enter your four-digit password. Active only when the machine has secure print data.

[Web]

Level 1	Descriptions
Web	Connect the Brother machine to an Internet service.

[Apps]

Level 1	Descriptions
Apps	Connect the Brother machine to the Brother Apps service.

[USB]

Level 1	Level 2	Descriptions
USB	Scan to USB	Scan documents to a USB Flash memory drive.
	Direct Print	Print the data directly from the USB flash drive.

[2 in 1 ID Copy]

Level 1	Descriptions
2 in 1 ID Copy	Copy both sides of an identification card onto one page.

Related Information

- Settings and Features Tables

Change Machine Settings from Your Computer

- Change Machine Settings Using Web Based Management
- Change the Machine Settings Using Remote Setup
- Where Can I Find My Brother Machine's Network Settings?
- Network Management Software and Utilities

Change Machine Settings Using Web Based Management

Web Based Management is a utility that uses a standard web browser to manage your machine using the Hyper Text Transfer Protocol (HTTP) or Hyper Text Transfer Protocol over Secure Socket Layer (HTTPS).

- What is Web Based Management?
- Access Web Based Management
- Set a Login Password for Web Based Management
- Network Management Software and Utilities

What is Web Based Management?

Web Based Management is a utility that uses a standard web browser to manage your machine using the Hyper Text Transfer Protocol (HTTP) or Hyper Text Transfer Protocol over Secure Socket Layer (HTTPS). Type your machine's IP address into your web browser to access and change your print server settings.

- We recommend Microsoft Internet Explorer 8.0/10.0/11.0 for Windows, and Safari 8.0 for Mac. Make sure that JavaScript and Cookies are always enabled in whichever browser you use. If you use different web browser, make sure it is compatible with HTTP 1.0 and HTTP 1.1.
- You must use the TCP/IP protocol on your network and have a valid IP address programmed into the print server and your computer.

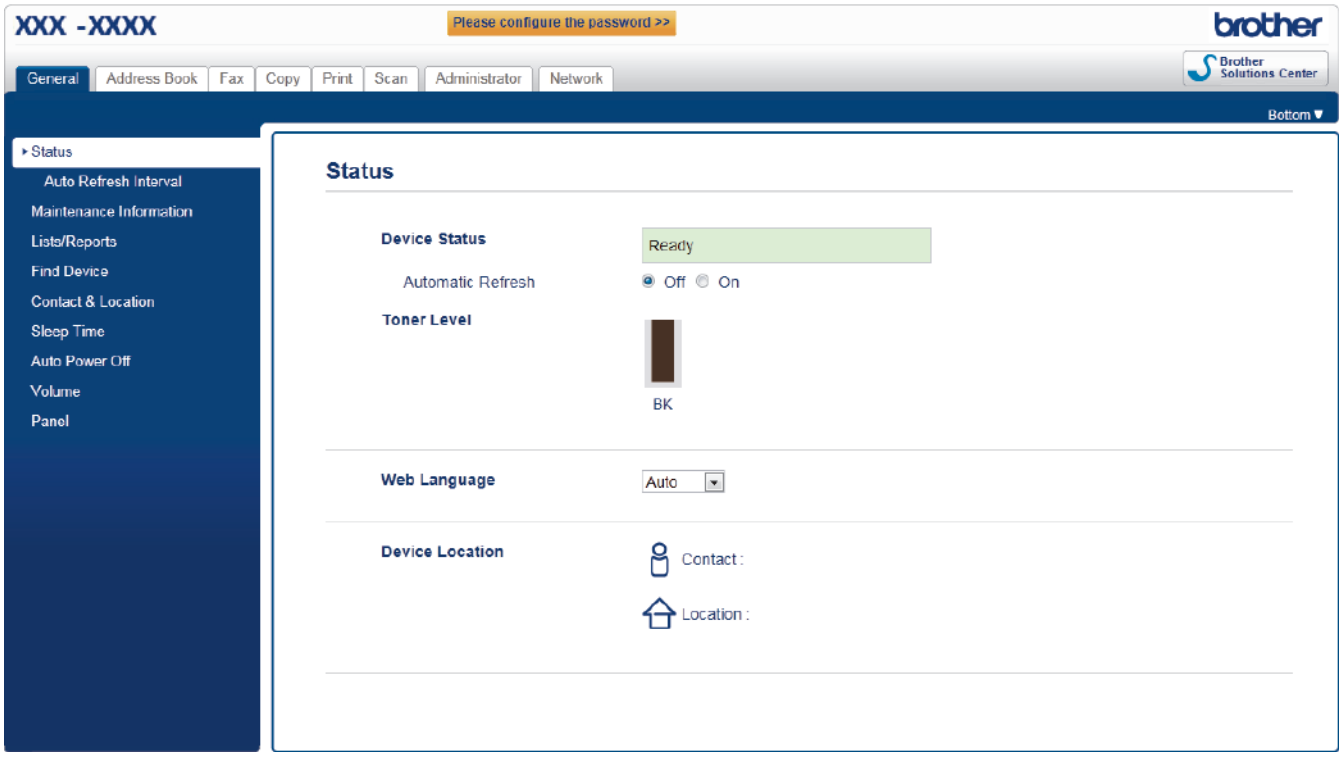

- The actual screen may differ from the screen shown above.
- The following explanations are examples. The available functions vary according to the model.

General

Use this tab to confirm the current status of your Brother machine and to change basic settings, such as the timer settings.

Address Book

Use this tab to edit your Brother machine's address book.

Fax

Use this tab to confirm and change the fax settings and to change the Internet fax (I-Fax) settings.

Copy

Use this tab to confirm and change the copy settings.

Print

Use this tab to confirm and change the print settings.

Scan

Use this tab to confirm and change the scan settings and to create Scan to FTP and Scan to Network profiles.

Administrator

Use this tab to set the Web Based Management password, reset various settings, and configure the function settings that are mainly used by administrators. You can also use Secure Function Lock to restrict functions according to the user.

Network

Use this tab to change the network settings, enable or disable the network protocols, and configure the security and certificate settings.

Related Information

- Change Machine Settings Using Web Based Management

Access Web Based Management

- We recommend using the HTTPS security protocol when configuring settings using Web Based Management.
- When you use HTTPS for Web Based Management configuration, your browser will display a warning dialog box.

1. Start your web browser.
2. Type "http://machine's IP address" in your browser's address bar (where "machine's IP address" is the machine's IP address).

   For example:

   http://192.168.1.2

- If you are using a Domain Name System or enable a NetBIOS name, you can type another name, such as "SharedPrinter" instead of the IP address.
  - For example:

    http://SharedPrinter

  If you enable a NetBIOS name, you can also use the node name.
  - For example:

    http://brnxxxxxxxxxxxx

  The NetBIOS name can be found in the Network Configuration Report.
- For Mac, access Web Based Management by clicking the machine's icon on the **Status Monitor** screen.

3. No password is required by default. Type a password if you have set one, and then click .

You can now change the print server settings.

If you change the protocol settings, you must restart the machine after clicking **Submit** to activate the configuration.

Related Information

- Change Machine Settings Using Web Based Management
- Print the Network Configuration Report

Set a Login Password for Web Based Management

We recommend setting a login password to prevent unauthorised access to Web Based Management.

1. Start your web browser.
2. Type "http://machine's IP address" in your browser's address bar (where "machine's IP address" is the machine's IP address).

   For example:

   http://192.168.1.2

- If you are using a Domain Name System or enable a NetBIOS name, you can type another name, such as "SharedPrinter" instead of the IP address.
  - For example:

    http://SharedPrinter

  If you enable a NetBIOS name, you can also use the node name.
  - For example:

    http://brnxxxxxxxxxxxx

  The NetBIOS name can be found in the Network Configuration Report.
- For Mac, access Web Based Management by clicking the machine's icon on the **Status Monitor** screen.

3. No password is required by default. Type a password if you have set one, and then click .
4. Click **Administrator**.
5. Type the password you want to use in the **Enter New Password** field (8 to 32 characters).
6. Retype the password in the **Confirm New Password** field.
7. Click **Submit**.

In the future, every time you access Web Based Management, type the password in the **Login** field, and then click .

After configuring the settings, log off by clicking .

If you have not previously set a login password, you can also set a password by clicking the **Please configure the password** button on the machine's web page.

Related Information

- Change Machine Settings Using Web Based Management

Change the Machine Settings Using Remote Setup

The Remote Setup program lets you configure many of your Brother machine's settings from your computer. When you start Remote Setup, the settings on your Brother machine will be downloaded to your computer and displayed on your screen. If you change the settings on your computer, you can upload them directly to the machine.

- Remote Setup (Windows)
- Remote Setup (Mac)

Remote Setup (Windows)

- Set Up the Brother Machine from Your Computer (Windows)
- Set Up the Brother Machine Using ControlCenter4 (Windows)
- Set Up Your Machine's Address Book Using ControlCenter4 (Windows)

Set Up the Brother Machine from Your Computer (Windows)

Related Models: MFC-L5700DN/MFC-L5755DW/MFC-L5900DW/MFC-L6700DW/MFC-L6900DW

If Secure Function Lock is set to On, you cannot use Remote Setup.

1. Do one of the following:
   - (Windows XP, Windows Vista and Windows 7)

     Click **(Start)** > **All Programs** > **Brother** > **Brother Utilities**.

     Click the drop-down list and select your model name (if not already selected). Click **Tools** in the left navigation bar, and then click **Remote Setup**.
   - (Windows 8)

     Click (**Brother Utilities**), and then click the drop-down list and select your model name (if not already selected). Click **Tools** in the left navigation bar, and then click **Remote Setup**.

   The Remote Setup Program window appears.

When your machine is connected via a Network, type the password if required.

2. Configure the settings as needed.

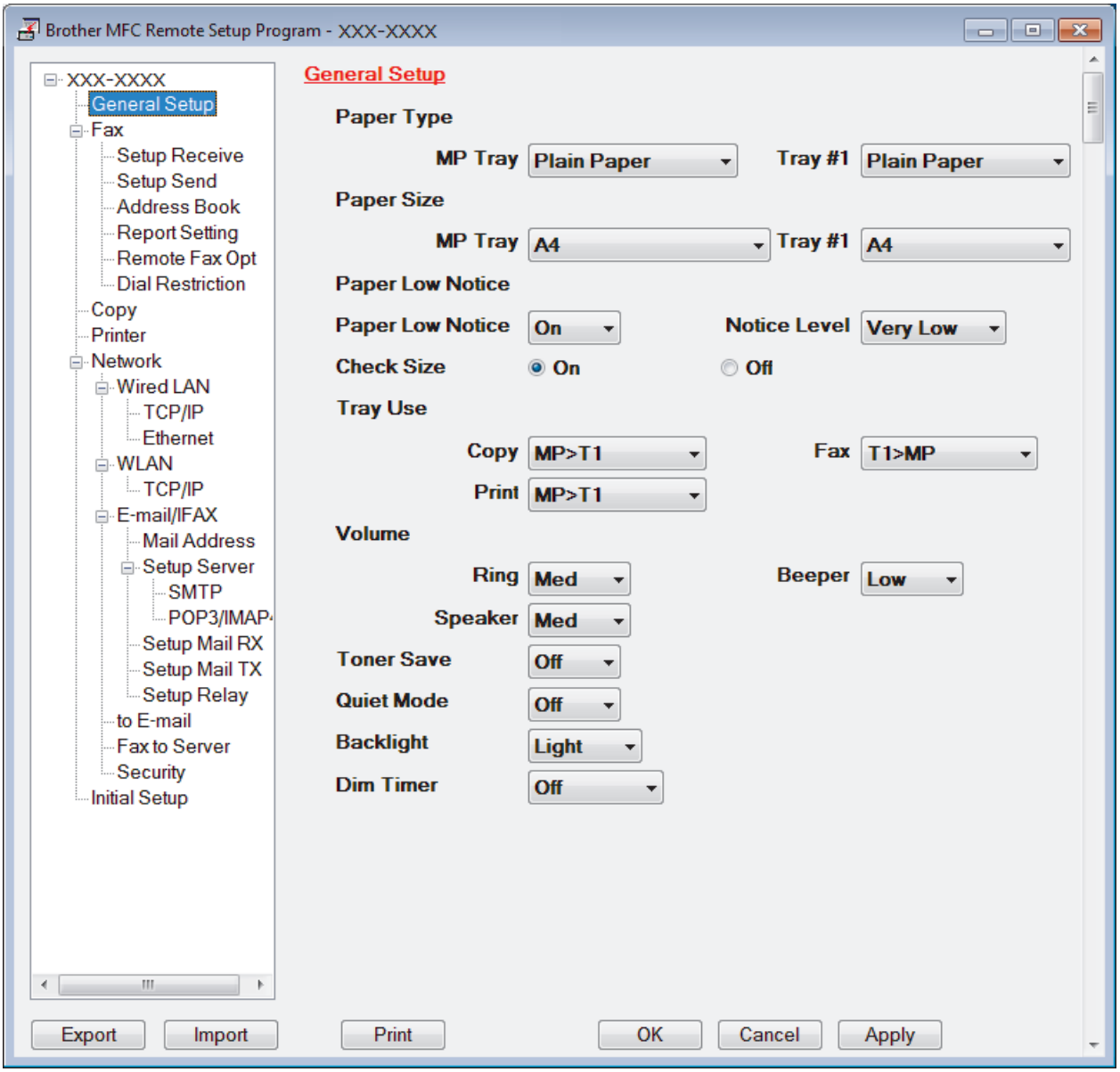

Export

Click to save the current configuration settings to a file.

Click **Export** to save your address book or all settings for your machine.

Import

Click to import a file and read its settings.

Print

Click to print the selected items on the machine. You cannot print the data until it is uploaded to the machine. Click **Apply** to upload the new data to the machine, and then click **Print**.

OK

Click to start uploading data to the machine, and then exit the Remote Setup Program. If an error message appears, confirm that your data is correct, and then click **OK**.

Cancel

Click to exit the Remote Setup Program without uploading data to the machine.

Apply

Click to upload data to the machine without exiting the Remote Setup Program.

3. Click **OK**.

- If your computer is protected by a firewall and is unable to use Remote Setup, you may need to configure the firewall settings to allow communication through port numbers 137 and 161.
- If you are using Windows Firewall and you installed the Brother software and drivers from the CD-ROM, the necessary firewall settings have already been set.

Related Information

- Remote Setup (Windows)

Set Up the Brother Machine Using ControlCenter4 (Windows)

Related Models: MFC-L5700DN/MFC-L5755DW/MFC-L5900DW/MFC-L6700DW/MFC-L6900DW

If Secure Function Lock is set to On, you cannot use Remote Setup.

1. Click the (**ControlCenter4**) icon in the task tray, and then click **Open**.
2. Click the **Device Settings** tab.
3. Click the **Remote Setup** button.
4. Configure the settings as needed.

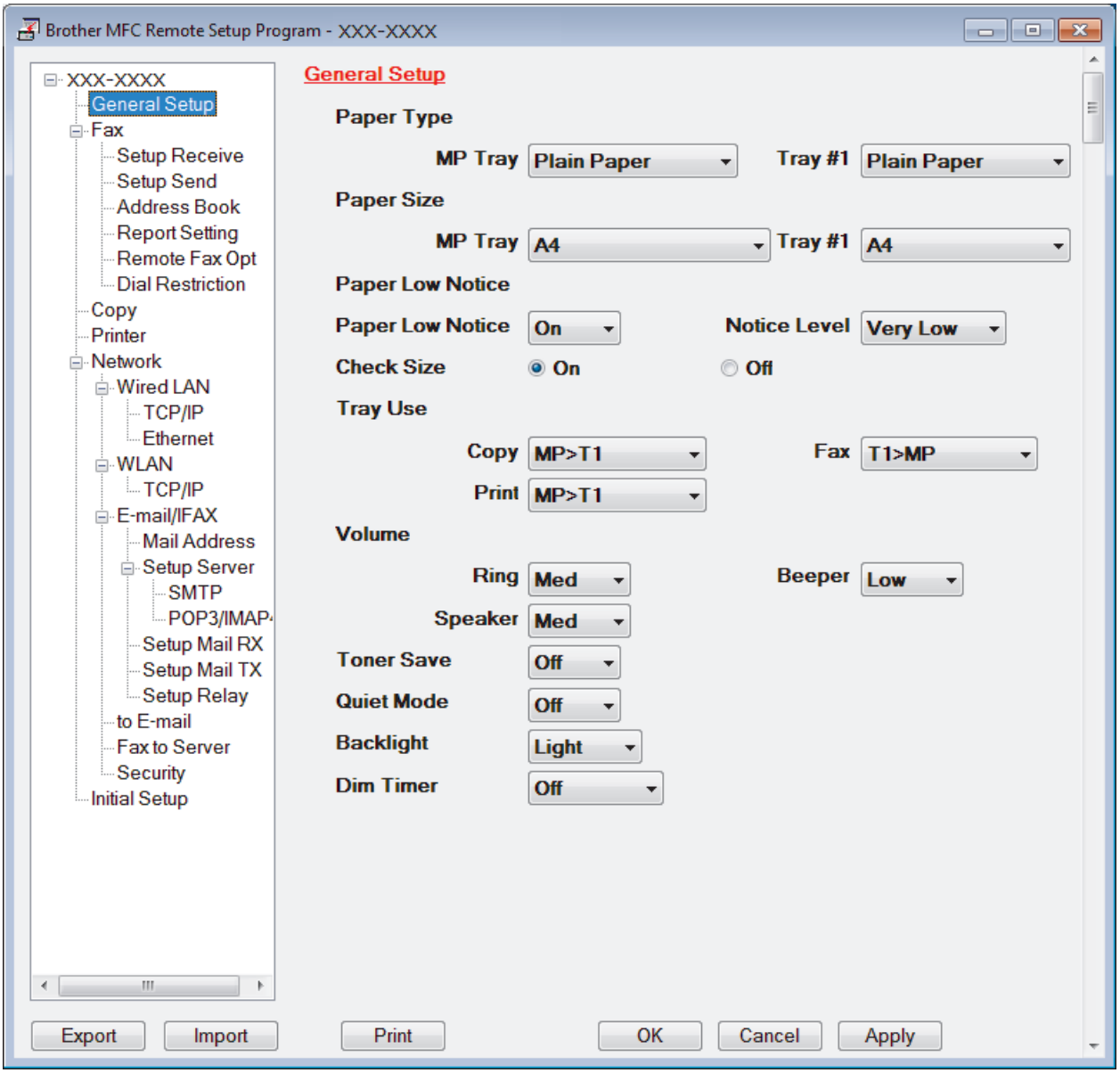

Export

Click to save the current configuration settings to a file.

Click **Export** to save your address book or all settings for your machine.

Import

Click to import a file and read its settings.

Print

Click to print the selected items on the machine. You cannot print the data until it is uploaded to the machine. Click **Apply** to upload the new data to the machine, and then click **Print**.

OK

Click to start uploading data to the machine, and then exit the Remote Setup Program. If an error message appears, confirm that your data is correct, and then click **OK**.

Cancel

Click to exit the Remote Setup Program without uploading data to the machine.

Apply

Click to upload data to the machine without exiting the Remote Setup Program.

5. Click **OK**.

- If your computer is protected by a firewall and is unable to use Remote Setup, you may need to configure the firewall settings to allow communication through port numbers 137 and 161.
- If you are using Windows Firewall and you installed the Brother software and drivers from the CD-ROM, the necessary firewall settings have already been set.

Related Information

- ControlCenter4 (Windows)
- Remote Setup (Windows)

Set Up Your Machine's Address Book Using ControlCenter4 (Windows)

Related Models: MFC-L5700DN/MFC-L5755DW/MFC-L5900DW/MFC-L6700DW/MFC-L6900DW

Use Remote Setup through CC4 to add or change Address Book numbers on your computer.

If Secure Function Lock is set to On, you cannot use Remote Setup.

1. Click the (**ControlCenter4**) icon in the task tray, and then click **Open**.
2. Click the **Device Settings** tab.
3. Click the **Address Book** button.
   The **Address Book** opens in a Remote Setup window.
4. Add or update the Address Book information as needed.
5. Click **OK**.

Related Information

- Remote Setup (Windows)

Remote Setup (Mac)

- Set Up the Brother Machine Using ControlCenter2 (Mac)
- Set Up Your Machine's Address Book Using ControlCenter2 (Mac)

Set Up the Brother Machine Using ControlCenter2 (Mac)

Related Models: MFC-L5700DN/MFC-L5755DW/MFC-L5900DW/MFC-L6700DW/MFC-L6900DW

If Secure Function Lock is set to On, you cannot use Remote Setup.

1. In the **Finder** menu bar, click **Go** > **Applications** > **Brother**, and then double-click the (**ControlCenter**) icon.
   The **ControlCenter2** screen appears.
2. Click the **DEVICE SETTINGS** tab.
3. Click the **Remote Setup** button.
   The Remote Setup Program screen appears.

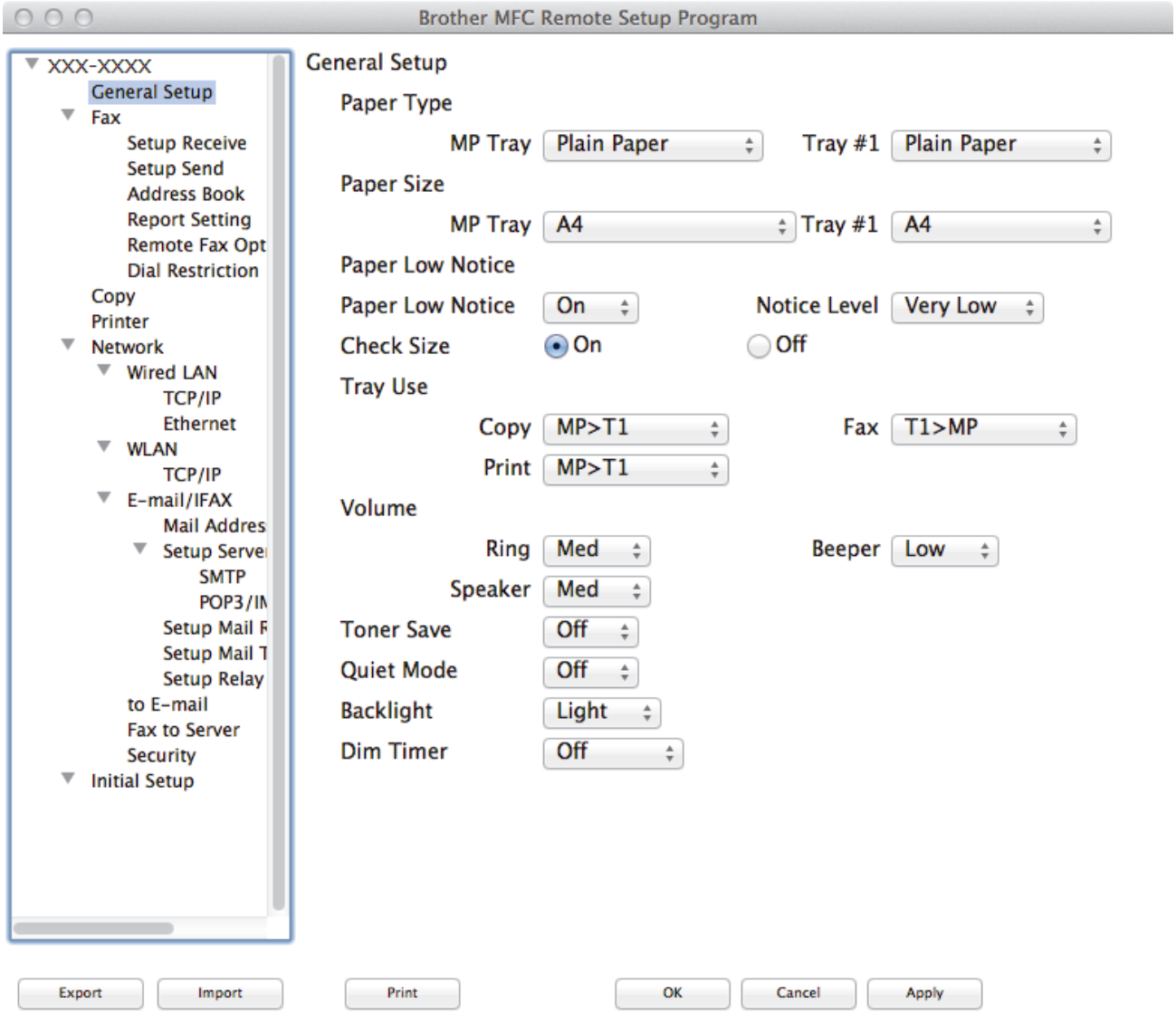

4. Configure the settings as needed.

   Export

   Click to save the current configuration settings to a file.

Click **Export** to save your address book or all settings for your machine.

Import

Click to import a file and read its settings.

Print

Click to print the selected items on the machine. You cannot print the data until it is uploaded to the machine. Click **Apply** to upload the new data to the machine, and then click **Print**.

OK

Click to start uploading data to the machine, and then exit the Remote Setup Program. If an error message appears, enter the correct data again, and then click **OK**.

Cancel

Click to exit the Remote Setup Program without uploading data to the machine.

Apply

Click to upload data to the machine without exiting the Remote Setup Program.

5. When finished, click **OK**.

Related Information

- ControlCenter2 (Mac)
- Remote Setup (Mac)

Set Up Your Machine's Address Book Using ControlCenter2 (Mac)

Related Models: MFC-L5700DN/MFC-L5755DW/MFC-L5900DW/MFC-L6700DW/MFC-L6900DW

Use Remote Setup through ControlCenter2 to add or change Address Book numbers on your computer.

If Secure Function Lock is set to On, you cannot use Remote Setup.

1. In the **Finder** menu bar, click **Go** > **Applications** > **Brother**, and then double-click the (**ControlCenter**) icon.
   The **ControlCenter2** screen appears.
2. Click the **DEVICE SETTINGS** tab.
3. Click the **Address Book** button.
   The **Address Book** opens in a Remote Setup window.
4. Add or update the Address Book information as needed.
5. When finished, click **OK**.

Related Information

- Remote Setup (Mac)

Appendix

- Specifications
- How to Enter Text on Your Brother Machine
- Supplies
- Accessories

Specifications

General Specifications

Printer Type		• Laser
Print Method		• Electrophotographic Laser Printer
Memory Capacity		• (For Australia and New Zealand) (MFC-L5755DW) 256 MB (MFC-L6700DW) 512 MB (MFC-L6900DW) 1 GB • (For Other countries) (DCP-L5600DN/MFC-L5700DN) 512 MB (MFC-L5900DW/MFC-L6900DW) 1 GB
LCD (liquid crystal display)		• (DCP-L5600DN/MFC-L5700DN/MFC-L5755DW/ MFC-L5900DW) 3.7 in. (93.4 mm) TFT Colour Touchscreen LCD [1] • (MFC-L6700DW/MFC-L6900DW) 4.85 in. (123.2 mm) TFT Colour Touchscreen LCD [1]
Power Source		• 220 to 240 V AC 50/60Hz
Power Consumption (Average)	**Peak** [2]	• Approximately 1,344 W
	Printing [2]	• (DCP-L5600DN/MFC-L5700DN/MFC-L5755DW/ MFC-L5900DW) Approximately 645 W at 25 °C • (MFC-L6700DW) Approximately 745 W at 25 °C • (MFC-L6900DW) Approximately 805 W at 25 °C
	Printing (Quiet Mode) [2]	• Approximately 390 W at 25 °C
	Copying [2]	• (DCP-L5600DN/MFC-L5700DN/MFC-L5755DW/ MFC-L5900DW) Approximately 645 W at 25 °C • (MFC-L6700DW) Approximately 745 W at 25 °C • (MFC-L6900DW) Approximately 805 W at 25 °C
	Copying (Quiet Mode) [2]	• Approximately 390 W at 25 °C
	Ready [2]	• Approximately 34 W at 25 °C
	Sleep [2]	• (DCP-L5600DN/MFC-L5700DN/MFC-L5755DW/ MFC-L5900DW) Approximately 7.5 W

Power Consumption (Average)			• (MFC-L6700DW/MFC-L6900DW) Approximately 8.0 W
		Deep Sleep [2]	• Approximately 1.6 W
		Power Off [2 3 4]	• Approximately 0.04 W
Dimensions 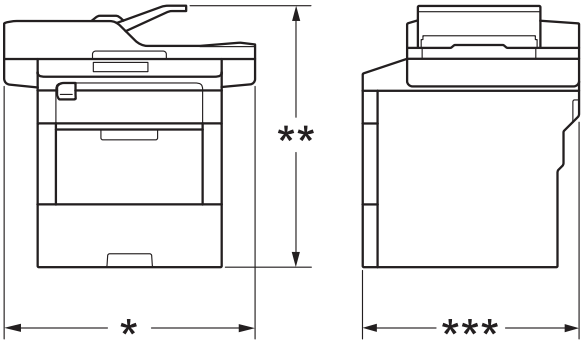 			Unit: mm • (MFC-L5700DN/MFC-L5755DW) * 435 ** 486 *** 427 • (DCP-L5600DN/MFC-L5900DW) * 495 ** 486 *** 427 • (MFC-L6700DW/MFC-L6900DW) * 495 ** 518 *** 427
Weights (with supplies)			• (DCP-L5600DN) 17.5 kg • (MFC-L5700DN) 16.8 kg • (MFC-L5755DW) 16.5 kg • (MFC-L5900DW) 17.7 kg • (MFC-L6700DW) 18.4 kg • (MFC-L6900DW) (For Australia and New Zealand) 18.9 kg (For Other countries) 19.1 kg
Noise Level	**Sound Pressure**	**Printing**	• (MFC-L5700DN/MFC-L5755DW) LpAm = 54 dB (A) • (DCP-L5600DN/MFC-L5900DW/MFC-L6700DW) LpAm = 55 dB (A) • (MFC-L6900DW) LpAm = 57 dB (A)
		Ready	• LpAm = 35.0 dB (A)
		Printing (Quiet Mode)	• (DCP-L5600DN/MFC-L5700DN/MFC-L5755DW/ MFC-L5900DW/MFC-L6700DW) LpAm = 52 dB (A) • (MFC-L6900DW) LpAm = 53 dB (A)
	Sound Power	**Printing**	• (MFC-L5700DN/MFC-L5755DW) LWAd = 6.67 B (A) • (DCP-L5600DN/MFC-L5900DW) LWAd = 6.73 B (A)

Noise Level	**Sound Power**	**Printing**	• (MFC-L6700DW/MFC-L6900DW) LWAd = 6.76 B (A)
		Ready	• LWAd = 4.80 B (A)
		Printing (Quiet Mode)	• LWAd = 6.47 B (A)
Temperature	**Operating**		• 10 to 32 °C
	Storage		• 0 to 40 °C
Humidity	**Operating**		• 20 to 80% (without condensation)
	Storage		• 35 to 85% (without condensation)
ADF (automatic document feeder)			• (MFC-L5700DN/MFC-L5755DW) Up to 50 sheets • (DCP-L5600DN/MFC-L5900DW/MFC-L6700DW) Up to 70 sheets • (MFC-L6900DW) Up to 80 sheets For best results we recommend: • Temperature: 20 to 30 °C • Humidity: 50 to 70% • Paper: 80 g/m^2

1 Measured diagonally
2 USB connections to computer
3 Measured according to IEC 62301 Edition 2.0.
4 Power consumption varies slightly depending on the usage environment.

Document Size Specification

Document Size	**ADF Width**	• 105 to 215.9 mm
	ADF Length	• 147.3 to 355.6 mm
	Scanner Glass Width	• Maximum 215.9 mm
	Scanner Glass Length	• (MFC-L5700DN/MFC-L5755DW) Maximum 300 mm • (DCP-L5600DN/MFC-L5900DW/MFC-L6700DW/MFC-L6900DW) Maximum 355.6 mm

Print Media Specifications

Paper Input	**Paper Tray (Standard)**	**Paper Type**	• Plain Paper, Letterhead, Coloured Paper, Thin Paper, Recycled Paper, Thick Paper [1]
		Paper Size	• A4, Letter, A5, A5 (Long Edge), A6, Executive, Legal, Folio, Mexico Legal, India Legal
		Paper Weight	• 60 to 120 g/m^2
		Maximum Paper Capacity	• (DCP-L5600DN/MFC-L5700DN/MFC-L5755DW/ MFC-L5900DW) Up to 250 sheets of 80 g/m^2 Plain Paper • (MFC-L6700DW/MFC-L6900DW) Up to 520 sheets of 80 g/m^2 Plain Paper
	Multi-purpose tray (MP tray)	**Paper Type**	• Plain Paper, Letterhead, Coloured Paper, Thin Paper, Thick Paper, Thicker Paper, Recycled Paper, Bond, Label, Envelope, Env.Thin, Env.Thick

Paper Input	**Multi-purpose tray (MP tray)**	**Paper Size**	• Width: 76.2 to 215.9 mm • Length: 127 to 355.6 mm
		Paper Weight	• 60 to 200 g/m^2
		Maximum Paper Capacity	• Up to 50 sheets of 80 g/m^2 Plain Paper Envelope: 10 envelopes up to 10 mm thick
	Paper Tray 2, 3 (Optional) [2]	**Paper Type**	• Plain Paper, Letterhead, Coloured Paper, Thin Paper, Recycled Paper, Thick Paper [1]
		Paper Size	• A4, Letter, A5, Executive, Legal, Folio, Mexico Legal, India Legal
		Paper Weight	• 60 to 120 g/m^2
		Maximum Paper Capacity	• (LT-5500/LT-5505) Up to 250 sheets of 80 g/m^2 Plain Paper • (LT-6500/LT-6505) Up to 520 sheets of 80 g/m^2 Plain Paper
Paper Output [3]	**Face Down Output Tray**		• (DCP-L5600DN/MFC-L5700DN/MFC-L5755DW/ MFC-L5900DW/MFC-L6700DW) Up to 150 Sheets of 80 g/m^2 Plain Paper (face down delivery to the face down output paper tray) • (MFC-L6900DW) Up to 250 Sheets of 80 g/m^2 Plain Paper (face down delivery to the face down output paper tray)
	Face Up Output Tray		• (DCP-L5600DN/MFC-L5700DN/MFC-L5755DW/ MFC-L5900DW/MFC-L6700DW) One sheet (face up delivery to the face up output tray) • (MFC-L6900DW) Up to 10 sheets (face up delivery to the face up output tray)
2-sided	**Automatic 2-sided Printing**	**Paper Type**	• Plain Paper, Letterhead, Coloured Paper, Thin Paper, Recycled Paper
		Paper Size	• (For models without the lever on the 2-sided tray) A4 • (For models with the lever on the 2-sided tray) Select the paper size you want to use by sliding the 2-sided lever: - A4 - Letter, Legal, Mexico Legal, India Legal, Folio
		Paper Weight	• 60 to 105 g/m^2

1 Open the back cover (face up output tray) before printing to let the printed paper exit onto the face up output tray.

2 You can install up to two Lower Trays.

3 For labels, we recommend removing the printed sheets from the output paper tray immediately after they exit the machine to avoid the possibility of smudging.

Fax Specifications

NOTE

This feature is available for MFC models.

Compatibility		• ITU-T Super Group 3
Coding System		• MH / MR / MMR / JBIG
Modem Speed		• 33,600 bps (with Automatic Fallback)
2-sided Print Receiving		• Yes
Automatic 2-sided Sending		• (MFC-L5755DW/MFC-L5900DW/MFC-L6700DW/MFC-L6900DW) Yes (from ADF)
Scanning Width		• Maximum 208 mm
Printing Width		• Maximum 208 mm
Greyscale		• 8bit / 256 levels
Resolution	**Horizontal**	• 203 dpi
	Vertical	• Standard: 98 dpi • Fine: 196 dpi • Super fine: 392 dpi • Photo: 196 dpi
Address Book		• 300 Locations
Groups		• Up to 20
Broadcasting		• 350 Locations
Automatic Redial		• 3 times at 5 minutes intervals
Memory Transmission		• Up to 500 pages [1]
Out of Paper Reception		• Up to 500 pages [1]

[1] 'Pages' refers to the 'ITU-T Test Chart #1' (a typical business letter, Standard resolution, JBIG code). Specifications and printed materials are subject to change without prior notice.

Copy Specification

Copy Width	• Maximum 210 mm
Automatic 2-sided Copy	• (MFC-L5755DW/MFC-L5900DW/MFC-L6700DW/MFC-L6900DW) Yes (from ADF)
Multiple Copies	• Sorts/Stacks up to 99 pages
Enlarge/Reduce	• 25 to 400% (in increments of 1%)
Resolution	• Maximum 1200 x 600 dpi
First Copy Out Time [1]	• (DCP-L5600DN/MFC-L5700DN/MFC-L5755DW/MFC-L5900DW) Less than 9.2 seconds at 23 °C / 230 V • (MFC-L6700DW/MFC-L6900DW) Less than 9.5 seconds at 23 °C / 230 V

[1] From Ready Mode and standard tray

Scanner Specifications

Colour / Black	• Yes / Yes
TWAIN Compliant	• Yes (Windows XP 32 bit SP3 / Windows XP 64 bit SP2 / Windows Vista / Windows 7 / Windows 8 / Windows 8.1) (OS X v10.8.5 / 10.9.x / 10.10.x)
WIA Compliant	• Yes

	(Windows XP 32 bit SP3 / Windows XP 64 bit SP2 / Windows Vista / Windows 7 / Windows 8 / Windows 8.1)
ICA Compliant	• Yes (OS X v10.8.5 / 10.9.x / 10.10.x)
Colour Depth	• 48 bit colour Processing (Input) • 24 bit colour Processing (Output)
Grey Scale	• 16 bit colour Processing (Input) • 8 bit colour Processing (Output)
Resolution [1]	• Up to 19200 × 19200 dpi (interpolated) • Up to 1200 x 1200 dpi (from Scanner Glass) • Up to 600 x 600 dpi (from ADF)
Scanning Width	• Maximum 210 mm
Automatic 2-sided Scanning	• (MFC-L5755DW/MFC-L5900DW/MFC-L6700DW/MFC-L6900DW) Yes (from ADF)

1 Maximum 1200 × 1200 dpi scanning with the WIA driver in Windows XP, Windows Vista, Windows 7, Windows 8 and Windows 8.1 (resolution up to 19200 × 19200 dpi can be selected by using the scanner utility)

Printer Specifications

Automatic 2-sided Print		• Yes
Emulation		• PCL6, BR-Script3, IBM Proprinter XL, Epson FX-850, PDF version1.7, XPS version 1.0
Resolution		• Up to 1200 x 1200 dpi
Print Speed [1] [2]	**1-sided print**	• (DCP-L5600DN/MFC-L5700DN/MFC-L5755DW/MFC-L5900DW) Up to 40 pages/minute (A4 size) • (MFC-L6700DW) Up to 46 pages/minute (A4 size) • (MFC-L6900DW) Up to 50 pages/minute (A4 size)
	2-sided Print	• (DCP-L5600DN/MFC-L5700DN/MFC-L5755DW/MFC-L5900DW) Up to 20 sides/minute (Up to 10 sheets/minute) (Letter or A4 size) • (MFC-L6700DW/MFC-L6900DW) Up to 24 sides/minute (Up to 12 sheets/minute) (Letter or A4 size)
First Print Time [3]		• (DCP-L5600DN/MFC-L5700DN/MFC-L5755DW/MFC-L5900DW) Less than 7.2 seconds at 23 °C / 230 V • (MFC-L6700DW/MFC-L6900DW) Less than 7.5 seconds at 23 °C / 230 V

1 The print speed may change depending on the type of document you print.
2 Print speed may be slower when the machine is connected by wireless LAN.
3 From Ready mode and standard tray

Interfaces Specifications

USB [1] [2]	• Hi-Speed USB 2.0 Use a USB 2.0 interface cable that is no more than 2.0 metres long.
LAN	• (DCP-L5600DN/MFC-L5700DN/MFC-L5755DW) 10Base-T / 100Base-TX [3] • (MFC-L5900DW/MFC-L6700DW/MFC-L6900DW)

LAN	10Base-T / 100Base-TX /1000Base-T [3] [4]
Wireless LAN	• (MFC-L5755DW/MFC-L5900DW/MFC-L6700DW/MFC-L6900DW) IEEE 802.11b/g/n (Infrastructure/Ad-hoc Mode) IEEE 802.11g/n (Wi-Fi Direct™)
NFC	• (MFC-L6900DW) Yes

1 Your machine has a USB 2.0 Hi-Speed interface. The machine can also be connected to a computer that has a USB 1.1 interface.
2 Third party USB ports are not supported.
3 Use a straight-through Category 5 (or greater) twisted-pair cable.
4 If you connect the machine to a Gigabit network, use network devices and cables that comply with the 1000BASE-T specification.

Supported Protocols and Security Features

Ethernet

10Base-T/100Base-TX/1000Base-T

Wireless LAN

IEEE 802.11b/g/n (Infrastructure Mode/Ad-hoc Mode), IEEE 802.11g/n (Wi-Fi Direct)

Protocols (IPv4)

ARP, RARP, BOOTP, DHCP, APIPA(Auto IP), WINS/NetBIOS name resolution, DNS Resolver, mDNS, LLMNR responder, LPR/LPD, Custom Raw Port/Port9100, POP3, SMTP Client, IPP/IPPS, FTP Client and Server, CIFS Client, TELNET Server, SNMPv1/v2c/v3, HTTP/HTTPS server, TFTP client and server, ICMP, Web Services (Print/Scan), SNTP Client, LDAP, IMAP4

Protocols (IPv6)

NDP, RA, DNS resolver, mDNS, LLMNR responder, LPR/LPD, Custom Raw Port/Port9100, IPP/IPPS, POP3, SMTP Client, FTP Client and Server, CIFS Client, TELNET Server, SNMPv1/v2c, HTTP/HTTPS server, TFTP client and server, ICMPv6, SNTP Client, LDAP, Web Services (Print/Scan), IMAP4

Network Security (Wired)

APOP, SMTP-AUTH, SSL/TLS (IPPS, HTTPS, SMTP, POP3, IMAP4), SNMP v3 802.1x (EAP-MD5, EAP-FAST, PEAP, EAP-TLS, EAP-TTLS), Kerberos, IPSec

Network Security (Wireless)

APOP, SMTP-AUTH, SSL/TLS (IPPS, HTTPS, SMTP, POP3, IMAP4), SNMP v3, 802.1x (LEAP, EAP-FAST, PEAP, EAP-TLS, EAP-TTLS), Kerberos, IPSec

Wireless Network Security

WEP 64/128 bit, WPA-PSK (TKIP/AES), WPA2-PSK (AES)

Wireless Certification

Wi-Fi Certification Mark License (WPA™/WPA2™ - Enterprise, Personal), Wi-Fi Protected Setup (WPS) Identifier Mark License, Wi-Fi CERTIFIED Wi-Fi Direct

Direct Print Feature Specifications

Compatibility	• PDF version1.7, JPEG, Exif+JPEG, PRN (created by own printer driver), TIFF (scanned by Brother models), XPS version 1.0
Interface	• USB direct interface : Front x 1, Rear x 1(MFC-L6900DW)

Computer Requirements Specifications

Supported Operating Systems And Software Functions

Computer Platform & Operating System Version		PC Interface			Processor	Hard Disk Space to Install	
		USB [1]	10Base-T / 100Base-TX / 1000Base-T [2 3] (Ethernet)	Wireless [4] 802.11b/g/n		For Drivers	For Applications (including Drivers)
Windows Operating System	Windows XP Home [5 6]	Printing PC Fax [7] Scanning			32 bit (x86) (SP3) or 64 bit (x64)(SP2) processor	150 MB	500 MB
	Windows XP Professional [5 6]						
	Windows Vista [5 6]					500 MB	1.2 GB
	Windows 7 [5 6]					650 MB	
	Windows 8 [5 6]						
	Windows 8.1 [5 6]						
	Windows Server 2008	N/A	Printing		32 bit (x86) or 64 bit (x64) processor	50 MB	N/A
	Windows Server 2008 R2				64 bit (x64) processor		
	Windows Server 2012						
	Windows Server 2012 R2						
Mac Operating System	OS X v10.8.5 OS X v10.9.x OS X v10.10.x	Printing PC-Fax (Send) [7] Scanning			Intel® Processor	80 MB	400 MB

1 Third party USB ports are not supported.

2 DCP-L5600DN/MFC-L5700DN/MFC-L5755DW support 10BASE-T/100BASE-TX

3 MFC-L5900DW/MFC-L6700DW/MFC-L6900DW support 10BASE-T/100BASE-TX/1000BASE-T

4 MFC-L5755DW/MFC-L5900DW/MFC-L6700DW/MFC-L6900DW

5 For WIA, 1200x1200 resolution. Brother Scanner Utility enables resolutions up to 19200 x 19200 dpi.

6 PaperPort™ 14SE supports Windows XP Home (SP3 or greater), XP Professional 32-bit (SP3 or greater),Windows Vista (SP2 or greater), Windows 7, Windows8 and Windows 8.1

7 PC-Fax supports black and white only.

For the latest driver updates, visit support.brother.com.

All trademarks, brand and product names are the property of their respective companies.

Related Information

- Appendix

How to Enter Text on Your Brother Machine

- When you must enter text on your Brother machine, a keyboard appears on the LCD.
- The characters that are available may differ depending on your country.
- The keyboard layout may differ depending on the operation you perform.

- Press A 1 @ to cycle between letters, numbers and special characters.
- Press aA to cycle between lowercase and uppercase letters.
- To move the cursor to the left or right, press ◀ or ▶.

Inserting spaces

- To enter a space, press [Space] or ▶.

Making corrections

- If you entered a character incorrectly and want to change it, press ◀ or ▶ to move the cursor to the incorrect character, and then press ⌫. Enter the correct character.
- To insert a character, press ◀ or ▶ to move the cursor to the correct place, and then enter the character.
- Press ⌫ for each character you want to erase, or press and hold ⌫ to erase all the characters.

Related Information

- Appendix
- Send Scanned Data to an Email Server
- Upload Scanned Data to an FTP Server
- Set Your Station ID
- Store Fax Numbers
- Configure Your Machine for a Wireless Network in Ad-Hoc Mode Using an Existing SSID
- Configure Your Machine for a Wireless Network Using the Machine's Control Panel Setup Wizard
- Configure Your Machine for a Wireless Network in Ad-Hoc Mode Using a New SSID
- Configure Your Machine for a Wireless Network When the SSID Is Not Broadcast
- Send an Internet Fax (I-Fax)
- Forward Received Email and Fax Messages
- Relay Broadcast from Your Brother Machine

Supplies

When the time comes to replace supplies, such as the toner or drum, an error message will appear on your machine's control panel or in the Status Monitor. For more information about the supplies for your machine, visit http://www.brother.com/original/index.html or contact your local Brother dealer.

- The toner cartridge and drum unit are two separate parts.
- The toner cartridge number will vary depending on your country and region.

Supply	Supply Model Name	Approximate Life (Page Yield)	Applicable Models
Toner Cartridge 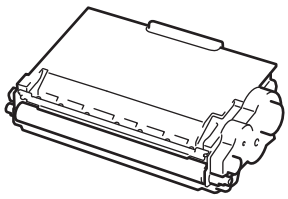	**Standard Toner:** (For Australia) TN-3420 (For New Zealand) TN-3415 (For Other countries) TN-3428	Approximately 3,000 pages [1] (A4 or Letter page)	DCP-L5600DN/ MFC-L5700DN/ MFC-L5755DW/ MFC-L5900DW/ MFC-L6700DW/ MFC-L6900DW
	High Yield Toner: (For Australia) TN-3440 (For New Zealand) TN-3425 (For Other countries) TN-3448	Approximately 8,000 pages [1] (A4 or Letter page)	DCP-L5600DN/ MFC-L5700DN/ MFC-L5755DW/ MFC-L5900DW/ MFC-L6700DW/ MFC-L6900DW
	Super High Yield Toner: (For Australia) TN-3470 (For New Zealand) TN-3465 (For Other countries) TN-3478	Approximately 12,000 pages [1] (A4 or Letter page)	(For Australia and New Zealand) MFC-L6700DW/ MFC-L6900DW (For Other countries) DCP-L5600DN/ MFC-L5700DN/ MFC-L5900DW/ MFC-L6900DW
	Ultra High Yield Toner: (For Australia) TN-3490 (For New Zealand) TN-3475 (For Other countries) TN-3498	Approximately 20,000 pages [1] (A4 or Letter page)	MFC-L6900DW
	Inbox Toner: supplied with your machine	Approximately 2,000 pages [1] (A4 or Letter page)	MFC-L5755DW
		Approximately 3,000 pages [1] (A4 or Letter page)	MFC-L6700DW
		Approximately 8,000 pages [1] (A4 or Letter page)	(For Australia and New Zealand) MFC-L6900DW (For Other countries) DCP-L5600DN/ MFC-L5700DN/ MFC-L5900DW
		Approximately 20,000 pages [1] (A4 or Letter page)	(Except Australia and New Zealand) MFC-L6900DW

Drum Unit 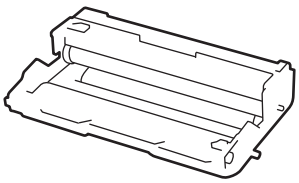	(For Australia) DR-3425 (For New Zealand) DR-3415 (For Other countries) DR-3455	Approximately 30,000 pages/ 50,000 pages [2]	DCP-L5600DN/ MFC-L5700DN/ MFC-L5755DW/ MFC-L5900DW/ MFC-L6700DW/ MFC-L6900DW

1 Approximate cartridge yield is declared in accordance with ISO/IEC 19752.

2 Approximately 30,000 pages based on 1 page per job and 50,000 pages based on 3 pages per job [A4/letter simplex pages]. The number of pages may be affected due to a variety of factors including but not limited to media type and media size.

Related Information

- Appendix
- Replace Supplies

Accessories

Availability of accessories may vary depending on your country or region. For more information about the accessories for your machine, visit http://www.brother.com/original/index.html or contact your Brother dealer or Brother customer service.

Model Name	Item	Applicable Models
LT-5500 (Grey)	Lower Tray (250 sheets)	DCP-L5600DN/MFC-L5700DN/MFC-L5755DW/ MFC-L5900DW/MFC-L6700DW
LT-5505 (White)		MFC-L6900DW
LT-6500 (Grey)	Lower Tray (520 sheets)	DCP-L5600DN/MFC-L5700DN/MFC-L5755DW/ MFC-L5900DW/MFC-L6700DW
LT-6505 (White)		MFC-L6900DW

Related Information

- Appendix

Glossary

This is a comprehensive list of features and terms that appear in Brother manuals. Availability of these features depends on the model you purchased.

A B C D E F G H I J L M N O P R S T U V W X

A

- Active Directory Authentication
- Ad-Hoc Mode
- Address Book
- Address Book List
- ADF (Automatic Document Feeder)
- AES
- APIPA
- APOP
- ARP
- Authentication
- Auto Reduction
- Automatic Fax Transmission
- Automatic Redial

B

- Backup Print
- Beeper Volume
- BOOTP
- BRAdmin Light (Windows)
- BRAdmin Professional (Windows)
- Broadcasting

- BRPrint Auditor (Windows)

C

- CA
- CA Certificate
- Caller ID
- Cancel Job
- Certificate
- Channels
- CIFS
- CNG Tones
- Coding Method
- Communication Error (or Comm. Error)
- Compatibility Group
- Contrast
- CSR
- Custom Raw Port

D

- Delayed Fax
- Density
- DHCP
- Digital Signature
- Distinctive Ring
- DNS Client
- DNS Server
- Driver Deployment Wizard

- Dual Access

E

- ECM (Error Correction Mode)
- Encryption
- Extension Telephone
- External Phone

F

- F/T Ring Time
- Fax Detect
- Fax Forwarding
- Fax Journal
- Fax Storage
- Fax Tones
- Fax/Tel
- Fine Resolution
- FTP

G

- Gateway
- Grey Scale
- Group Number

H

- HTTP (Web Server)
- HTTPS

I

- IEEE 802.1x

- Infrastructure Mode
- Internet Fax
- IP Address
- IPP
- IPPS
- IPsec
- IPv6

J

- Journal Period

L

- LEAP
- LLMNR
- LPD
- LPR

M

- MAC Address
- Manual Fax
- MDN
- mDNS
- Memory Receive

N

- NetBIOS Name Resolution
- Network Configuration Report
- Network Connection Repair Tool
- Network Key

- Network PC-FAX
- Network Remote Setup
- Network Shared Printing
- Node Name

O

- Open System
- Out of Paper Reception
- Overseas Mode

P

- Paging
- Pause
- PEAP
- Peer-to-Peer
- Photo resolution (Mono only)
- Protocols
- Public Key Cryptosystem
- Pulse

R

- RARP
- Real Time Transmission
- Remaining Jobs
- Remote Access Code
- Remote Activation Code (Fax/Tel Mode Only)
- Remote Deactivation Code (Fax/Tel Mode only)
- Remote Retrieval Access

- Remote Setup
- Resolution
- Ring Delay
- Ring Volume

S

- Scan to Email Server
- Scanning
- Search
- Secure Function Lock 3.0
- Settings Tables
- Shared Key Cryptosystem
- SMTP Client
- SMTP over SSL
- SMTP-AUTH
- SNMP
- SNMPv3
- SNTP
- SSID
- SSL/TLS
- Standard resolution
- Station ID
- Status Monitor
- Store Print Log to Network
- Subnet Mask
- Super Fine resolution (Mono only)

T

- TAD (Telephone Answering Device)
- TCP/IP
- TELNET
- Temporary Settings
- TKIP
- Tone
- Transmission
- Transmission Verification Report

U

- User Settings List

V

- Vertical Pairing

W

- Web Based Management
- Web Services
- WEP
- Wi-Fi Direct®
- WINS
- WINS Server
- WLAN Report
- WPA-PSK/WPA2-PSK Authentication Method
- WPS

X

- Xmit Report (Transmission Verification Report)

Active Directory Authentication

Active Directory Authentication restricts the use of the Brother machine. You cannot use your machine until you log on to the machine using a user ID and password.

Ad-Hoc Mode

The mode of operation in a wireless network, in which all devices (machines and computers) are connected without an access point/router.

Address Book

Names and numbers you have stored for easy dialling.

Address Book List

A listing of names and numbers stored in the Address Book memory, in alphabetical order.

ADF (Automatic Document Feeder)

The document can be placed in the ADF and scanned one page at a time automatically.

AES

Advanced Encryption Standard (AES) is the Wi-Fi®-authorised strong encryption standard.

APIPA

If you do not assign an IP address manually or automatically (using a DHCP, BOOTP, or RARP server), the Automatic Private IP Addressing (APIPA) protocol will automatically assign an IP address from the range 169.254.1.0 to 169.254.254.255.

APOP

Authenticated Post Office Protocol (APOP) expands POP3 (the Internet receiving protocol) to include an authentication method that encrypts the password when the client receives email.

ARP

Address Resolution Protocol (ARP) performs mapping of an IP address to a MAC address in a TCP/IP network.

Authentication

Most wireless networks use some kind of security settings. These security settings define the authentication (how the device identifies itself to the network) and encryption (how the data is encrypted as it is sent on the network). If you do not correctly specify these options when you are configuring your Brother wireless machine, it will not be able to connect to the wireless network. Therefore, care must be taken when configuring these options.

Authentication Methods for a Personal Wireless Network

A personal wireless network is a small network (such as a home wireless network) without IEEE 802.1x support.

- Open system

  Wireless devices are allowed to access the network without any authentication.
- Shared key

  A secret pre-determined key is shared by all devices that will access the wireless network. The Brother wireless machine uses the WEP key as the pre-determined key.
- WPA-PSK/WPA2-PSK

  Enables a Wi-Fi Protected Access® Pre-shared key (WPA-PSK/WPA2-PSK), which enables the Brother wireless machine to associate with access points using TKIP for WPA-PSK or AES for WPA-PSK and WPA2-PSK (WPA-Personal).

Authentication Methods for an Enterprise Wireless Network

An enterprise wireless network is a large network, for example using your machine in a business enterprise wireless network, with IEEE 802.1x support. If you configure your machine in an IEEE 802.1x supported wireless network, you can use the following authentication methods.

- LEAP
- EAP-FAST
- PEAP
- EAP-TTLS
- EAP-TLS

The authentication methods above use the user ID less than 64 characters and a password of less than 32 characters in length.

Auto Reduction

Reduces the size of incoming faxes.

Automatic Fax Transmission

Sending a fax without picking up the handset of the external telephone or pressing Hook.

Automatic Redial

A feature that enables your machine to redial the last fax number after five minutes if the fax did not go through because the line was busy.

Backup Print

Your machine prints a copy of every fax that is received and stored in memory. This is a safety feature so you will not lose messages during a power failure.

Beeper Volume

Volume setting for the sound when you press a button or make an error.

BOOTP

The Bootstrap Protocol (BOOTP) is a network protocol used by a network client to obtain an IP Address from a configuration server.

To use BOOTP, contact your network administrator.

BRAdmin Light (Windows)

BRAdmin Light is a utility for the initial setup of Brother network-connected devices. This utility can search for Brother products on your network, view the status and configure the basic network settings, such as IP address.

Go to your model's **Downloads** page on the Brother Solutions Center at support.brother.com to download BRAdmin Light.

BRAdmin Professional (Windows)

BRAdmin Professional is a utility for more advanced management of network-connected Brother devices. This utility can search for Brother products on your network and view the device status from an easy-to-read Windows Explorer-style screen that changes colour to identify the status of each device. You can configure network and device settings, and update device firmware from a Windows computer on your LAN. BRAdmin Professional can also log activity of Brother devices on your network and export the log data in an HTML, CSV, TXT, or SQL format. For users who want to monitor locally-connected machines, install the Print Auditor Client software on the client computer. This utility allows you to use BRAdmin Professional to monitor machines that are connected to a client computer via the USB interface.

Go to your model's **Downloads** page on the Brother Solutions Center at support.brother.com to download the software.

- This utility is available only for Windows.
- Go to your model's **Downloads** page on the Brother Solutions Center at support.brother.com to download the latest version of Brother's BRAdmin Professional utility.
- Node name: The node name appears in the current BRAdmin Professional window. The default node name is "BRNxxxxxxxxxxxx" for a wired network or "BRWxxxxxxxxxxxx" for a wireless network (where "xxxxxxxxxxxx" is your machine's MAC Address / Ethernet address).
- If you are using Windows Firewall, or the firewall function of an anti-spyware or antivirus application, temporarily disable them. When you are sure you can print, configure the software settings following the instructions.

Broadcasting

The ability to send the same fax message to more than one location.

BRPrint Auditor (Windows)

Brother's BRPrint Auditor software brings the monitoring power of Brother network management tools to locally-connected machines. This utility allows a client computer to collect usage and status information from your Brother machine connected via the parallel or USB interface. The BRPrint Auditor can then pass this information to another computer running BRAdmin Professional on the network. This allows the administrator to check items, such as page counts, toner and drum status, and the firmware version. In addition to reporting to Brother network management applications, this utility can email the usage and status information directly to a predefined email address in a CSV or XML file format (SMTP Mail support required). The BRPrint Auditor utility also supports email notification for reporting warning and error conditions.

CA

A Certificate Authority (CA) is an entity that issues digital certificates (especially X.509 certificates) and vouches for the binding between the data items in a certificate.

CA Certificate

A CA Certificate is the certification that identifies the CA itself and owns its private key. A CA Certificate verifies a certificate issued by the CA.

Caller ID

A service purchased from the telephone company that lets you see the number (or name) of the party calling you.

Cancel Job

Cancels a programmed print job and clears it from the machine's memory.

Certificate

A Certificate is the information that binds together a public key with an identity. The certificate can be used to verify that a public key belongs to an individual. The format is defined by the X.509 standard.

Channels

Wireless networks use channels. Each wireless channel is on a different frequency. There are up to 14 different channels that can be used when using a wireless network. However, in many countries the number of channels available is restricted.

CIFS

The Common Internet File System (CIFS) is the standard way that computer users share files and printers in Windows.

CNG Tones

The special tones (beeps) sent by fax machines during automatic transmission to tell the receiving machine that a fax machine is calling.

Coding Method

Method of coding the information contained in the document. All fax machines must use a minimum standard of Modified Huffman (MH). Your machine is capable of greater compression methods, Modified Read (MR), Modified Modified Read (MMR) and JBIG, if the receiving machine has the same capability.

Communication Error (or Comm. Error)

An error during fax sending or receiving, usually caused by line noise or static.

Compatibility Group

The ability of one fax unit to communicate with another. Compatibility is assured between ITU-T Groups.

Contrast

Setting to compensate for dark or light documents, by making faxes or copies of dark documents lighter and light documents darker.

CSR

A Certificate Signing Request (CSR) is a message sent from an applicant to a Certificate Authority (CA) to apply for issue of a certificate. The CSR contains information identifying the applicant, the public key generated by the applicant and the digital signature of the applicant.

Custom Raw Port

Custom raw port is a commonly used printing protocol on a TCP/IP network that enables interactive data transmission. Default is Port 9100.

Delayed Fax

Sends your fax at a specified later time that day.

Density

Changing the Density makes the whole image lighter or darker.

DHCP

The Dynamic Host Configuration Protocol (DHCP) is a network protocol that is used to configure network devices so that they can communicate on an IP Network.

To use DHCP, contact your network administrator.

Digital Signature

A Digital Signature is a value computed with a cryptographic algorithm and appended to a data object in such a way that any recipient of the data can use the signature to verify the data's origin and integrity.

Distinctive Ring

This feature is available only in the USA and Canada.

A subscriber service purchased from the telephone company that gives you another telephone number on an existing telephone line. The Brother machine uses the new number to simulate a dedicated fax line.

DNS Client

The Brother print server supports the Domain Name System (DNS) client feature. This feature allows the print server to communicate with other devices using its DNS name.

DNS Server

The Domain Name System (DNS) is a technology to manage the names of web sites and internet domains. A DNS server allows your computer to find its IP address automatically.

Driver Deployment Wizard

Brother's Installation CD-ROM includes the Windows printer driver and Brother network port driver (LPR and NetBIOS). If an administrator installs the printer driver and port driver using this application, the administrator can save the file to the file server or send the file by email to users. Then, each user just clicks that file to have the printer driver, port driver, IP address, etc. automatically copied to their computer.

Dual Access

Your machine can scan outgoing faxes or scheduled jobs into memory at the same time it is sending a fax or receiving or printing an incoming fax.

ECM (Error Correction Mode)

Detects errors during fax transmission and resends the pages of the fax that had an error.

Encryption

Most wireless networks use some kind of security settings. These security settings define the authentication (how the device identifies itself to the network) and encryption (how the data is encrypted as it is sent on the network). If you do not correctly specify these options when you are configuring your Brother wireless machine, it will not be able to connect to the wireless network. Therefore, care must be taken when configuring these options.

Encryption Methods for a Personal Wireless Network

A personal wireless network is a small network (such as a home wireless network) without IEEE 802.1x support.

- None

  No encryption method is used.
- WEP

  When using Wired Equivalent Privacy (WEP) the data is transmitted and received with a secured key.
- TKIP

  Temporal Key Integrity Protocol (TKIP) provides per-packet key mixing a message integrity check and rekeying mechanism.
- AES

  Advanced Encryption Standard (AES) provides stronger data protection using a symmetric-key encryption.

- IEEE 802.11n does not support either WEP or TKIP as an encryption method.
- To connect to your wireless network using IEEE 802.11n, we recommend selecting AES.

Encryption Methods for an Enterprise Wireless Network

An enterprise wireless network is a large network, for example using your machine in a business enterprise wireless network, with IEEE 802.1x support. If you configure your machine in an IEEE 802.1x supported wireless network, you can use the following encryption methods.

- TKIP
- AES
- CKIP

  The original key Integrity Protocol for LEAP by Cisco Systems, Inc.

Extension Telephone

A telephone on the fax number that is plugged into a separate wall socket.

External Phone

A TAD (telephone answering device) or telephone that is connected to your machine.

F/T Ring Time

The length of time that the Brother machine pseudo/double-rings (when the Receive Mode setting is Fax/Tel) to notify you to pick up a voice call that it answered.

Fax Detect

Enables your machine to respond to CNG tones if you interrupt a fax call by answering it.

Fax Forwarding

Sends a fax received into the memory to another pre-programmed fax number.

Fax Journal

Lists information about the last 200 incoming and outgoing faxes. TX means Transmit. RX means Receive.

Fax Storage

You can store faxes in the memory.

Fax Tones

The signals sent by sending and receiving fax machines while communicating information.

Fax/Tel

You can receive faxes and telephone calls. Do not use this mode if you are using a telephone answering device (TAD).

Fine Resolution

Resolution is 203 × 196 dpi. It is used for small print and graphs.

FTP

The File Transfer Protocol (FTP) allows the Brother machine to scan monochrome or colour documents directly to an FTP server located locally on your network or on the Internet.

Gateway

A gateway is a network point that acts as an entrance to another network and sends data transmitted via the network to an exact destination. The router knows where to direct data that arrives at the gateway. If a destination is located on an external network, the router transmits data to the external network. If your network communicates with other networks, you may need to configure the Gateway IP address. If you do not know the Gateway IP address, then contact your Network Administrator.

Grey Scale

The shades of grey available for copying and faxing photographs.

Group Number

A combination of Address Book numbers that are stored in Address Book for Broadcasting.

HTTP (Web Server)

Hypertext Transfer Protocol (HTTP) is used to transmit the data between a web server and a web browser. The Brother print server is equipped with a built-in web server that allows you to monitor its status or change some of its configuration settings using a web browser.

HTTPS

HTTPS (HTTP over SSL/TLS) is the version of the Hypertext Transfer Protocol (HTTP) that uses SSL/TLS so that web content is transferred and displayed securely.

IEEE 802.1x

IEEE 802.1x is a networking authentication standard used to connect to a wired or wireless LAN. It restricts connections which are not authentic and only users authenticated by a central authority are allowed to be connected.

Infrastructure Mode

The mode of operation in a wireless network, in which all devices (machines and computers) are connected via an access point/router.

Internet Fax

Internet Fax (I-Fax) allows you to send and receive fax documents using the Internet as the transport mechanism.

Before using this feature, configure the necessary machine's settings using the machine's control panel.

IP Address

An Internet Protocol (IP) address is a series of numbers that identifies each device connected to a network. An IP address consists of four numbers separated by dots. Each number is between 0 and 255.

Example: In a small network, you would normally change the final number.

192.168.1.1

192.168.1.2

192.168.1.3

How the IP address is assigned to your print server:

If you have a DHCP/BOOTP/RARP server in your network, the print server will automatically obtain its IP address from that server.

On smaller networks, the DHCP server may also be the Router.

If you do not have a DHCP/BOOTP/RARP server, the Automatic Private IP Addressing (APIPA) protocol will automatically assign an IP address from the range 169.254.1.0 to 169.254.254.255.

IPP

The Internet Printing Protocol (IPP Version 1.0) allows you to print documents directly to any accessible machine via the Internet.

IPPS

IPPS (Internet Printing Protocol) is the printing protocol that uses SSL. IPPS is used to send and receive printing data and manage printing devices.

IPsec

IPsec is an optional security feature of the IP protocol that provides authentication and encryption services.

IPv6

IPv6 is the next generation Internet protocol. For more information on the IPv6 protocol, go to your model's page on the Brother Solutions Center at support.brother.com.

Journal Period

The pre-programmed time period between automatically printed Fax Journal Reports. You can print the Fax Journal on demand without interrupting the cycle.

LEAP

Lightweight Extensible Authentication Protocol (LEAP) is a proprietary EAP method developed by Cisco Systems, Inc. that uses a user ID and password for authentication. LEAP is used in wireless networks.

LLMNR

The Link-Local Multicast Name Resolution (LLMNR) protocol resolves the names of neighboring computers, if the network does not have a Domain Name System (DNS) server. The LLMNR Responder feature works in both the IPv4 or IPv6 environment when using Windows Vista or greater.

LPD

Line Printer Daemon (LPD or LPR) protocol is a commonly-used printing protocol on a TCP/IP network, mainly for UNIX®-based operating systems.

LPR

Line Printer Daemon (LPR or LPD) protocol is a commonly-used printing protocol on a TCP/IP network.

MAC Address

The MAC Address (Ethernet Address) is a unique number assigned for the machine's network interface.

Manual Fax

When you press Hook to hear the receiving fax machine answer before you press Fax Start to begin transmission.

MDN

The Message Disposition Notification (MDN) field of the control panel menu requests the status of the Internet Fax/-mail message after delivery through the Simple Mail Transfer Protocol (SMTP) transport system.

Once the message has arrived at the receiver, this data is used when the machine or user reads or prints the received Internet Fax or Email.

For example, if the message is opened for reading or is printed, the receiver sends back a notification to the original sending machine or user.

The receiver must support the MDN field to be able to send a notification report, otherwise the request will be ignored.

mDNS

Multicase DNS (mDNS) allows the Brother print server to configure itself to work in an OS X Simple Network Configuration system automatically.

Memory Receive

Receives faxes into the machine's memory when the machine is out of paper.

NetBIOS Name Resolution

Network Basic Input/Output System (NetBIOS) name resolution enables you to obtain the IP address of the other device using its NetBIOS name during the network connection.

Network Configuration Report

The Network Configuration Report prints a report listing the current network configuration, including the network print server settings.

Network Connection Repair Tool

The Network Connection Repair Tool is a program Brother provides to correct the driver's settings so that they match the machine's network settings. To use the Network Connection Repair Tool, ask your network administrator.

Network Key

The Network Key is a password, which is used when the data is encrypted or decrypted. The Network Key is also described as the Password, Security Key, or Encryption Key. The table shows the number of characters of the key to use for each setting.

Open system/Shared key with WEP

This key is a 64-bit or a 128-bit value that must be entered in an ASCII or hexadecimal format.

	ASCII	Hexadecimal
64 (40) bit	Uses five text characters. For example, "WSLAN" (case-sensitive).	Uses 10 digits of hexadecimal data. For example, "71f2234aba" (not case-sensitive).
128 (104) bit	Uses 13 text characters. For example, "Wirelesscomms" (case-sensitive).	Uses 26 digits of hexadecimal data. For example, "71f2234ab56cd709e5412aa2ba" (not case-sensitive).

WPA-PSK/WPA2-PSK and TKIP or AES

Uses a Pre-Shared Key (PSK) that is eight or more characters in length, up to a maximum of 63 characters.

Network PC-FAX

Use Network PC-FAX to send a file from your computer as a fax. Windows users can also receive faxes via PC-FAX.

Network Remote Setup

The Remote Setup software allows you to configure network settings from either a Windows or Mac computer.

Network Shared Printing

Network Shared Printing is a type of printing in a network shared environment. In a network shared environment, each computer sends data via a server or print server.

Node Name

The Node Name is a machine name on the network. This name is often referred to as a NetBIOS name; it will be the name that is registered by the WINS server on your network. Brother recommends the name "BRNxxxxxxxxxxxx" for a wired network or "BRWxxxxxxxxxxxx" for a wireless network (where "xxxxxxxxxxxx" is your machine's MAC address / ethernet address.)

Open System

Open System is one of the network authentication methods. Under open system authentication, any wireless devices are allowed to access the network without requiring a WEP key.

Out of Paper Reception

Receives faxes into the machine's memory when the machine is out of paper.

Overseas Mode

Makes temporary changes to the fax tones to accommodate noise and static on overseas telephone lines.

Paging

This feature enables your machine to call your cell phone or pager when a fax is received into its memory.

Pause

Allows you to place a delay in the dialling sequence while you are dialling or while you are storing Address Book numbers. Press Pause on the LCD as many times as needed for longer pauses.

PEAP

Protected Extensible Authentication Protocol (PEAP) is a version of EAP method developed by Cisco Systems, Inc., Microsoft Corporation and RSA Security. PEAP creates an encrypted Secure Sockets Layer (SSL)/ Transport Layer Security (TLS) tunnel between a client and an authentication server, for sending a user ID and password. PEAP provides mutual authentication between the server and the client.

The Brother machine supports the following inner authentications:

- PEAP/MS-CHAPv2
- PEAP/GTC

Peer-to-Peer

Peer-to-Peer is a type of printing in a peer-to-peer environment. In a peer-to-peer environment, each computer sends and receives data directly to and from each device. There is no central server controlling access or machine sharing.

Photo resolution (Mono only)

A resolution setting that uses varying shades of grey for the best representation of photographs.

Protocols

Protocols are the standardised sets of rules for transmitting data on a network. Protocols allow users to gain access to network-connected resources. The print server used on your Brother machine supports the Transmission Control Protocol/Internet Protocol (TCP/IP) protocol.

Public Key Cryptosystem

A Public Key Cryptosystem is a modern branch of cryptography in which the algorithms employ a pair of keys (a public key and a private key) and use a different component of the pair for different steps of the algorithm.

Pulse

This feature is not available in some countries.

A form of rotary dialling on a telephone line.

RARP

Reverse Address Resolution Protocol (RARP) finds the logical address for a machine that knows only its physical address.

To use RARP, contact your network administrator.

Real Time Transmission

When memory is full, you can send faxes in real time.

Remaining Jobs

You can check which programmed fax jobs are waiting in the memory and cancel the jobs individually.

Remote Access Code

Your own four-digit code (– – –*) that allows you to call and access your machine from a remote location.

Remote Activation Code (Fax/Tel Mode Only)

Press this code (*51) (*91 for New Zealand) when you answer a fax call on an extension or external telephone.

Remote Deactivation Code (Fax/Tel Mode only)

When the machine answers a voice call, it pseudo/double-rings. You can pick up at an extension telephone by pressing this code (**#51** (**#91** for New Zealand)).

Remote Retrieval Access

The ability to access your machine remotely from a touch tone telephone.

Remote Setup

The Remote Setup program lets you configure many machine and network settings from a computer application. When you start this application, the settings on your machine will be downloaded automatically to your computer and displayed on your computer screen. If you change the settings, you can upload them directly to the machine.

Resolution

The number of vertical and horizontal lines per inch.

Ring Delay

The number of rings before the machine answers in Fax Only and Fax/Tel modes.

Ring Volume

Volume setting for the machine's ring.

Scan to Email Server

The Scan to Email Server feature lets you scan a monochrome or colour document and send it directly to an email address from the machine.

Scanning

The process of sending an electronic image of a paper document into your computer.

Search

An alphabetical electronic listing of stored Address Book and Group numbers.

Secure Function Lock 3.0

Secure Function Lock 3.0 increases security by restricting the use of functions.

Settings Tables

At-a-glance instructions that show all the settings and options that are available for setting up your machine.

Shared Key Cryptosystem

A Shared Key Cryptosystem is a branch of cryptography involving algorithms that use the same key for two different steps of the algorithm (such as encryption and decryption).

SMTP Client

Simple Mail Transfer Protocol (SMTP) client is used to send emails via the Internet or Intranet.

SMTP over SSL

SMTP over SSL feature enables sending encrypted email using SSL.

SMTP-AUTH

SMTP Authentication (SMTP-AUTH) expands SMTP (the Internet email sending protocol) to include an authentication method that ensures the true identity of the sender is known.

SNMP

The Simple Network Management Protocol (SNMP) is used to manage network devices including computers, routers and Brother network-ready machines. The Brother print server supports SNMPv1, SNMPv2c and SNMPv3.

SNMPv3

Simple Network Management Protocol version 3 (SNMPv3) provides user authentication and data encryption to manage network devices securely.

SNTP

The Simple Network Time Protocol (SNTP) is used to synchronize computer clocks on a TCP/IP network. You can configure the SNTP settings using Web Based Management.

SSID

Each wireless network has its own unique network name and it is technically referred to as a Service Set Identifier (SSID). The SSID is a 32-byte or less value and is assigned to the access point. The wireless network devices you want to associate to the wireless network should match the access point. The access point and wireless network devices regularly send wireless packets (referred to as beacons), which contain the SSID information. When your wireless network device receives a beacon, you can identify the wireless network that is close enough for the radio waves to reach your device.

SSL/TLS

Secure Socket Layer (SSL) or Transport Layer Security (TLS) is an effective method of protecting data that is sent over a local or wide area network. SSL/TLS works by encrypting data, such as a print job, sent over a network, so anyone trying to capture it will not be able to read it .

SSL/TLS can be configured on both wired and wireless networks and will work with other forms of security including WPA keys and firewalls.

Standard resolution

203 × 98 dpi (monochrome). 203 × 196 dpi (colour). It is used for regular sized text and the quickest transmission.

Station ID

The stored information that appears on the top of faxed pages. It includes the sender's name and fax number.

Status Monitor

The Status Monitor utility is a configurable utility to monitor the status of one or more devices, allowing you to get immediate notification when there is a problem, for example, when the machine runs out of paper or jams.

Store Print Log to Network

The Store Print Log to Network feature allows you to save the print log file from your Brother machine to a network server using CIFS.

Subnet Mask

A subnet mask allows you to identify which part of an IP address is used as the network address and which part is used as the host address.

In the following example, the last segment of the IP address is known as the host address and the first three segments are the network address.

Example: Computer 1 can talk to Computer 2

- Computer 1

  IP Address: 192.168.1.2

  Subnet Mask: 255.255.255.0
- Computer 2

  IP Address: 192.168.1.3

  Subnet Mask: 255.255.255.0

0 denotes that there is no limit to communication at this part of the address.

Super Fine resolution (Mono only)

203 × 392 dpi. Best for very small print and line art.

TAD (Telephone Answering Device)

You can connect an external TAD to your machine.

TCP/IP

Transmission Control Protocol/Internet Protocol (TCP/IP) is the most popular set of protocols used for communication, such as Internet and email. This protocol can be used in almost all operating systems, including Windows, Windows Server, OS X and Linux®.

TELNET

The TELNET protocol allows you to control the remote network devices on a TCP/IP network from your computer.

Temporary Settings

You can choose certain options for each fax transmission and copy without changing the default settings.

TKIP

Temporal Key Integrity Protocol (TKIP) is one of the encryption methods adopted by WPA™ to be used in a wireless network. TKIP provides per-packet key mixing, a message integrity check and rekeying mechanism.

Tone

This feature is not available in some countries.

A form of dialling on the telephone line used for Touch Tone telephones.

Transmission

The process of sending faxes over the telephone lines from your machine to the receiving fax machine.

Transmission Verification Report

A report for each transmission, that shows its date, time and number.

User Settings List

A printed report that shows the current settings of the machine.

Vertical Pairing

Vertical Pairing is a technology for Windows that allows your Vertical Pairing-supported wireless machine to connect to your Infrastructure network using the PIN Method of Wi-Fi Protected Setup™ and the Web Services feature. It also enables printer driver installation from the printer icon in the **Add a device** screen.

Web Based Management

A standard Web Browser can be used to manage your machine using the Hyper Text Transfer Protocol (HTTP) or Hyper Text Transfer Protocol over Secure Socket Layer (HTTPS). You can perform the function listed or get the following information from a machine on your network using a web browser:

- Machine status information
- Change Fax configuration items, such as General Setup, Address Book settings and Remote Fax (MFC models)
- Change network settings, such as TCP/IP information
- Configure Gigabit Ethernet and Jumbo Frame
- Configure Secure Function Lock
- Configure Store Print Log to Network
- Configure Scan to FTP
- Configure Scan to Network
- Configure LDAP (available for certain models)
- Software version information of the machine and print server
- Change network and machine configuration details

In order to use Web Based Management, you must use the TCP/IP protocol on your network and have a valid IP address programmed into the print server and your computer.

Web Services

The Web Services protocol enables Windows Vista, Windows 7, or Windows 8 users to install the drivers used for printing and scanning by using the machine icon in the **Network** folder. Web Services also lets you check the current status of the machine from your computer.

WEP

Wired Equivalent Privacy (WEP) is one of the encryption methods used in a wireless network. When using WEP, the data is transmitted and received with a secure key.

Wi-Fi Direct®

Wi-Fi Direct is one of the wireless configuration methods developed by the Wi-Fi Alliance®. This type of connection is a Wi-Fi® standard that allows devices to connect with each other without a wireless access point, using secured method.

WINS

Windows Internet Name Service (WINS) is an information-providing service for NetBIOS name resolution. It consolidates an IP address and a NetBIOS name that is in the local network.

WINS Server

Windows Internet Name Service (WINS) Server maps IP addresses to computer names (NetBIOS names) in a Windows network.

WLAN Report

The WLAN Report prints your machine’s wireless status report. If the wireless connection fails, check the error code on the printed report.

WPA-PSK/WPA2-PSK Authentication Method

WPA-PSK/WPA2-PSK authentication method enables a Wi-Fi Protected Access® Pre-shared key (WPA-PSK/WPA2-PSK), which enables the Brother wireless machine to associate with access points using TKIP for WPA-PSK or AES for WPA-PSK and WPA2-PSK (WPA-Personal).

WPS

Wi-Fi Protected Setup™ (WPS) is a standard that allows the setup of secured wireless networks. WPS was created by the Wi-Fi Alliance® in 2007.

Xmit Report (Transmission Verification Report)

A listing for each transmission, that shows its date, time and number.

Visit us on the World Wide Web
www.brother.com

These machines are approved for use in the country of purchase only. Local Brother companies or their dealers will support only machines purchased in their own countries.

Brother Earth
www.brotherearth.com

OCE/ASA
Version B