brother

Advanced User's Guide

MFC-L8600CDW
MFC-L8650CDW
MFC-L8850CDW
MFC-L9550CDW
DCP-L8400CDN
DCP-L8450CDW

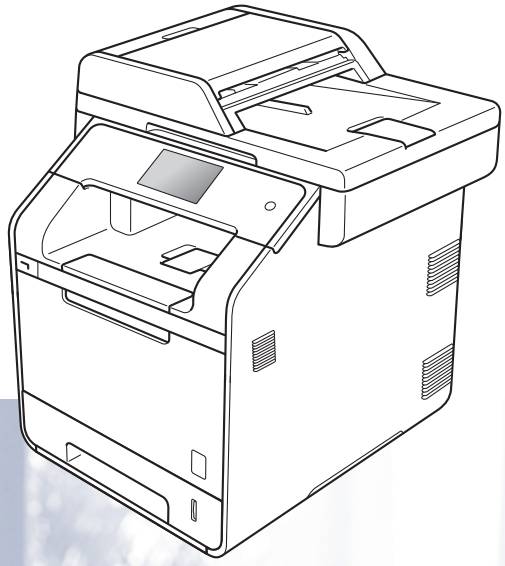

Not all models are available in all countries.

Version 0

ARL/ASA/NZ

User’s Guides and where do I find them?

Which Guide?	What’s in it?	Where is it?
Product Safety Guide	Read this Guide first. Please read the Safety Instructions before you set up your machine. See this Guide for trademarks and legal limitations.	Printed / In the Box
Quick Setup Guide	Follow the instructions for setting up your machine and installing the drivers and software for the operating system and connection type you are using.	Printed / In the Box
Basic User's Guide	Learn the basic Fax (MFC models only), Copy, Scan and Direct Print operations and how to replace supplies. See troubleshooting tips.	For MFC models Printed / In the Box For DCP models (Windows®) PDF file / CD-ROM / In the Box (Macintosh) PDF file / Brother Solutions Center [1]
Advanced User's Guide	Learn more advanced operations: Fax (MFC models only), Copy, security features, printing reports and performing routine maintenance.	(Windows®) PDF file / CD-ROM / In the Box (Macintosh) PDF file / Brother Solutions Center [1]
Software and Network User's Guide	This Guide provides instructions for Scanning, Printing and other operations that can be performed by connecting your Brother machine to a computer. You can also find useful information about using the Brother ControlCenter utility, using your machine in a network environment, and frequently used terms.	(Windows®) HTML file / CD-ROM / In the Box (Macintosh) HTML file / Brother Solutions Center [1]
Google Cloud Print Guide	This Guide provides details on how to configure your Brother machine to a Google account and use Google Cloud Print™ services for printing over the Internet.	PDF file / Brother Solutions Center [1]
Mobile Print/Scan Guide for Brother iPrint&Scan	This Guide provides useful information about printing from your mobile device and scanning from your Brother machine to your mobile device when connected on a Wi-Fi® network.	PDF file / Brother Solutions Center [1]
Web Connect Guide	This Guide provides details about how to configure and use your Brother machine to scan, load and view images and files on certain websites that provide these services.	PDF file / Brother Solutions Center [1]

[1] Visit http://solutions.brother.com/.

Table of Contents

1 General Setup 1

Memory storage 1
Set tone or pulse dialling mode
(not available in New Zealand) 1
Set Daylight Saving Time 2
Set the Time Zone 2
Ecology features 3
Toner Save 3
Sleep Time 3
Deep Sleep mode 4
Auto Power Off (DCP models only) 4
Quiet mode feature 4
Quiet mode 4
Touchscreen 5
Setting the backlight brightness 5
Setting the Dim Timer for the backlight 5
Dial Prefix (MFC models only) 6
Setting up the prefix number 6
Changing the prefix number 6

2 Security features 7

Secure Function Lock 3.0 7
Before you begin to use Secure Function Lock 3.0 8
Turning Secure Function Lock on/off 8
Configure Secure Function Lock 3.0 Using Web Based Management 9
Setting up the card authentication users
(For MFC-L9550CDW) 10
Setting up and changing the Public user mode 10
Switching Users 11
Active Directory Authentication 12
Turning Active Directory Authentication Lock on/off 12
IPSec 13
Setting Lock 13
Setting up the administrator password 14
Changing the Setting Lock administrator password 14
Turning Setting Lock on/off 15
Dial Restriction
(MFC models only) 15
Dial pad restriction 15
Address Book restriction 16
Shortcuts restriction 16
LDAP server restriction 16

3 Sending a fax (MFC models only) 17

Additional sending options 17
Sending faxes using multiple settings 17
Changing a 2-sided fax layout (MFC-L8850CDW and MFC-L9550CDW) 18
Contrast 19
Changing Fax Resolution 19
Additional sending operations 20
Sending a fax manually 20
Dual access 20
Broadcasting 21
Real Time Transmission 23
Overseas Mode 23
Delayed Fax 24
Delayed batch transmission 24
Checking and cancelling waiting jobs 25
Setting your changes as the new default 25
Restoring all fax settings to the factory settings 26
Saving fax options as a Shortcut 26
Electronic cover page 27
Destination Display 29

4 Receiving a fax (MFC models only) 30

Memory Receive Options 30
Fax Forwarding 30
Fax Storage 31
Changing Memory Receive Options 31
Turning off Memory Receive Options 32
Remote retrieval 33
Setting a Remote Access Code 33
Using your Remote Access Code 33
Remote fax commands 34
Retrieving fax messages 35
Changing the Fax Forwarding number 35
Additional receiving operations 36
Printing a reduced incoming fax 36
2-sided printing for Fax mode 36
Setting the Fax Receive Stamp 37
Printing a fax from the memory 37
Out of Paper Reception 37

5 Dialling and storing numbers (MFC models only) 38

Additional dialling operations 38
Combining Address Book numbers 38
Additional ways to store numbers 39
Storing Address Book numbers from Outgoing Calls 39
Setting up Groups for Broadcasting 39

6 Printing reports 42

Fax reports
(MFC models only) 42
Transmission Verification Report 42
Fax Journal (Activity Report) 42
Reports 43
How to print a report 43

7 Making copies 44

Copy settings 44
Stop copying 44
Improving copy quality 44
Enlarging or reducing copies 45
2-sided Copying 46
Tray selection 48
Adjusting Density and Contrast 48
Sorting copies 49
Making N in 1 copies (page layout) 50
2 in 1 ID Copy 52
Adjusting the Colour Saturation 53
Making 2-sided N in 1 copies (MFC-L8650CDW, MFC-L8850CDW, MFC-L9550CDW and DCP-L8450CDW) 53
Removing Background Colour 54
Saving copy options as a Shortcut 55
Saving paper 55

A Routine maintenance 56

Checking the machine 56
Printing the Test Print 56
Checking the Page Counters 56
Checking the remaining life of toner cartridges 56
Checking the remaining life of parts 56
Replacing periodic maintenance parts 57
Packing and shipping the machine 58

B Options 61

Options 61
Optional paper tray (For DCP-L8400CDN, DCP-L8450CDW, MFC-L8600CDW, MFC-L8650CDW and MFC-L8850CDW (LT-320CL))
(For MFC-L9550CDW (LT-325CL)) 62
Memory board 62
SO-DIMM Types 62
Installing extra memory 63

C Glossary 65

1 General Setup

NOTE

- This manual shows the LCD messages of the MFC-L9550CDW unless specified.
- Most of the illustrations in this User's Guide show the MFC-L8850CDW.

Memory storage

Your settings are stored permanently, and in the event of a power failure will *not* be lost. Temporary settings (for example, Contrast and Overseas Mode [1]) *will* be lost. Also, during a power failure the machine will retain the date and time and programmed fax timer jobs (for example, Delayed Fax) [1] for up to 60 hours. Other fax jobs in the machine's memory will not be lost [1].

[1] For MFC models only

Set tone or pulse dialling mode (not available in New Zealand)

Your machine comes set for a Tone dialling service. If you have a Pulse dialling (rotary) service, you need to change the dialling mode.

1. Press .
2. Press `All Settings`.
3. Swipe up or down, or press ▲ or ▼ to display `Initial Setup`.
   Press `Initial Setup`.
4. Swipe up or down, or press ▲ or ▼ to display `Tone/Pulse`.
   Press `Tone/Pulse`.
5. Press `Pulse` (or `Tone`).
6. Press .

Set Daylight Saving Time

You can set the machine to change for Daylight Saving Time. If you choose `Forward Hour`, it will reset the time forward one hour and if you choose `Backward Hour`, it will reset the time backward one hour.

1. Press .
2. Press 00:00 01.01.2014 (`Date & Time`).
3. Press `Daylight Save`.
4. Press `Forward Hour` or `Backward Hour`.
5. Press .

Set the Time Zone

You can set the time zone on the machine for your location.

1. Press .
2. Press 00:00 01.01.2014 (`Date & Time`).
3. Press `Time Zone`.
4. Enter your time zone.
   Press `OK`.
5. Press .

Ecology features

Toner Save

You can save toner using this feature. When you set Toner Save to On, print appears lighter. The factory setting is Off.

1. Press .
2. Press All Settings.
3. Swipe up or down, or press ▲ or ▼ to display General Setup.
4. Press General Setup.
5. Swipe up or down, or press ▲ or ▼ to display Ecology.
6. Press Ecology.
7. Press Toner Save.
8. Press On or Off.
9. Press .

NOTE

We do not recommend Toner Save for printing Photo or Greyscale images.

Sleep Time

The Sleep Time setting can reduce power consumption. When the machine is in Sleep mode (Power Save mode) it acts as though it is turned off. The machine will wake up and start printing when it receives a print job.

You can choose how long the machine must be idle before it goes into Sleep mode. The timer will restart if any operation is carried out on the machine, such as receiving a fax [1] or a print job. The factory setting is three minutes.

When the machine goes into Sleep mode, the Touchscreen backlight turns off.

[1] For MFC models only

1. Press .
2. Press All Settings.
3. Swipe up or down, or press ▲ or ▼ to display General Setup.
4. Press General Setup.
5. Swipe up or down, or press ▲ or ▼ to display Ecology.
6. Press Ecology.
7. Press Sleep Time.
8. Using the Touchscreen's keyboard, enter the length of time (0-50 minutes) the machine will remain idle before entering Sleep mode.
   Press OK.
9. Press .

Deep Sleep mode

If the machine is in Sleep mode and does not receive any jobs for a certain length of time, the machine will go into Deep Sleep mode automatically. Deep Sleep mode uses less power than Sleep mode. The machine will wake up when it receives a job or if you press the Touchscreen.

When the machine is in Deep Sleep mode, the Touchscreen backlight turns off and blinks.

Auto Power Off (DCP models only)

If the machine is in Deep Sleep mode for a certain length of time, it will go into Power Off mode. To start printing, press on the Touchpanel, and then send the print data.

You can choose how long the machine must be in Deep Sleep mode before it goes into Auto Power Off mode, by following these steps:

1. Press .
2. Press `All Settings`.
3. Swipe up or down, or press ▲ or ▼ to display `General Setup`.
4. Press `General Setup`.
5. Swipe up or down, or press ▲ or ▼ to display `Ecology`.
6. Press `Ecology`.
7. Press `Auto Power Off`.
8. Choose the length of time `Off`, `1hour`, `2hours`, `4hours` or `8hours` the machine will remain idle before entering Auto Power Off mode.
9. Press .

Quiet mode feature

Quiet mode

The Quiet mode setting can reduce noise while printing. When Quiet Mode is turned `On`, the print speed becomes slower. The default setting is `Off`.

1. Press .
2. Press `All Settings`.
3. Swipe up or down, or press ▲ or ▼ to display `General Setup`.
4. Press `General Setup`.
5. Swipe up or down, or press ▲ or ▼ to display `Ecology`.
6. Press `Ecology`.
7. Press `Quiet Mode`.
8. Press `On` or `Off`.
9. Press .

Touchscreen

Setting the backlight brightness

You can adjust the brightness of the Touchscreen LCD backlight. If you are having difficulty reading the Touchscreen, try changing the brightness setting.

1. Press .
2. Press `All Settings`.
3. Swipe up or down, or press ▲ or ▼ to display `General Setup`.
4. Press `General Setup`.
5. Swipe up or down, or press ▲ or ▼ to display `LCD Settings`.
6. Press `LCD Settings`.
7. Press `Backlight`.
8. Press `Light`, `Med` or `Dark`.
9. Press .

Setting the Dim Timer for the backlight

You can set how long the Touchscreen LCD backlight stays on after you go back to your Home screen.

1. Press .
2. Press `All Settings`.
3. Swipe up or down, or press ▲ or ▼ to display `General Setup`.
4. Press `General Setup`.
5. Swipe up or down, or press ▲ or ▼ to display `LCD Settings`.
6. Press `LCD Settings`.
7. Press `Dim Timer`.
8. Press `Off`, `10Secs`, `20Secs` or `30Secs`.
9. Press .

Dial Prefix (MFC models only)

The Dial Prefix setting will automatically dial a predefined number before every fax number you dial. For example: If your telephone system requires a 9 to dial an outside number, use this setting to automatically dial 9 for every fax you send.

Setting up the prefix number

1. Press .
2. Press All Settings.
3. Swipe up or down, or press ▲ or ▼ to display Initial Setup.
4. Press Initial Setup.
5. Swipe up or down, or press ▲ or ▼ to display Dial Prefix.
6. Press Dial Prefix.
7. Press On (or Off).
8. Press Dial Prefix.
9. Enter the prefix number (up to 5 digits) using the Touchscreen's keyboard. Press OK.

NOTE

- You can use the numbers and symbols 0 to 9, #, and ∗. (You cannot use ! with any other numbers or symbols.)
- If your telephone system requires a time break recall (hookflash), press ! on the Touchscreen.
- If pulse dialing mode is on, # and ∗ are not available to use.

10. Press .

Changing the prefix number

1. Press .
2. Press All Settings.
3. Swipe up or down, or press ▲ or ▼ to display Initial Setup.
4. Press Initial Setup.
5. Swipe up or down, or press ▲ or ▼ to display Dial Prefix.
6. Press Dial Prefix.
7. Press On (or Off).
   You can turn off the prefix number by pressing Off. The prefix number will remain off until you press On.
8. Press Dial Prefix.
9. Do one of the following using the Touchscreen's keyboard.
   - To change the prefix number, press ◀ or ▶ to position the cursor under the digit to be deleted and press the Back Space button . Then press the correct digit.

     Repeat until the prefix number is correct, and then press OK.
   - To exit without making a change, press OK.

NOTE

- You can use the numbers and symbols 0 to 9, #, and ∗. (You cannot use ! with any other numbers or symbols.)
- If your telephone system requires a time break recall (hookflash), press ! on the Touchscreen.
- If pulse dialing mode is on, # and ∗ are not available to use.

10. Press .

2 Security features

Secure Function Lock 3.0

Secure Function Lock lets you restrict Public access to the following machine operations:

- **Fax TX** (Fax Sending) [1]
- **Fax RX** (Fax Receiving) [1]
- **Copy**
- **Scan** (Remote) [2] [3]
- **Scan** (Direct) [3] [4]
- **USB Direct Print**
- **Print** [5]
- **Web Connect** (**Upload**)
- **Web Connect** (**Download**)
- **Color Print** [5] [6]
- **Page Limits** [6]

1 For MFC models only

2 Scan except Scan to USB

3 Scan includes scan jobs via Brother iPrint&Scan.

4 Scan to USB

5 Print and Color Print include print jobs via Google Cloud Print™ and Brother iPrint&Scan.

6 Available for **Print**, **USB Direct Print**, **Copy** and **Web Connect** (**Download**).

This feature also prevents users from changing the default settings of the machine by limiting access to the machine's settings.

Before using the security features you must first enter an administrator password.

The administrator can set up restrictions for individual users along with a user password.

Make a careful note of your password. If you forget it, you will have to reset the password stored in the machine. For information about how to reset the password, contact Brother customer service.

NOTE

- Secure Function Lock can be set by using Web Based Management or BRAdmin Professional 3 (Windows® only).
- Only administrators can set limitations and make changes for each user.
- (For MFC-L9550CDW)
  Use card authentication to switch to a different user and access operations, such as sending or receiving faxes, copying, remote [1] or direct [2] scanning, USB Direct Print and Web Connect.

1 Scanning, except Scan to USB

2 Scan to USB

Before you begin to use Secure Function Lock 3.0

You can configure the Secure Function Lock settings using a web browser. Before configuration, the following preparations are needed.

1. Start your web browser.
2. Type “http://machine’s IP address/” into your browser’s address bar (where “machine’s IP address” is the IP address of the Brother machine).
   - For example:

     http://192.168.1.2/

NOTE

You can find the machine’s IP address in the Network Configuration List (see Software and Network User's Guide).

3. Type an Administrator password in the **Login** box. (This is a password to log on to the machine’s web page.) Click ➔.

NOTE

If you are using a web browser to configure the machine’s settings for the first time, set a password (see Software and Network User's Guide).

Turning Secure Function Lock on/off

1. Click **Administrator**.
2. Click **User Restriction Function**.
3. Select **Secure Function Lock** or **Off**.
4. Click **Submit**.

NOTE

The Secure Function Lock icon is displayed beneath the time and date.

Configure Secure Function Lock 3.0 Using Web Based Management

Set up groups with restrictions and users with a password and card ID (NFC ID) [1]. You can set up to 100 restricted groups and 100 users. Configure these settings using a web browser. To set up the web page, see *Before you begin to use Secure Function Lock 3.0* on page 8. Then follow these steps:

[1] For MFC-L9550CDW

1. Click **Administrator**.
2. Click **Restricted Functions xx-xx**.
3. Type an alphanumeric Group name (up to 15 characters) in the **User List / Restricted Functions** field.

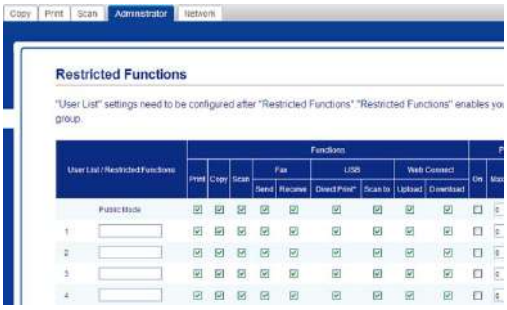

4. In the **Print** and other columns, clear the check box to restrict access to operations. To configure the maximum page count, select the **On** check box in **Page Limits**, and then type the number in the **Max. Pages** box.
5. Click **Submit**.
6. Click **User List xx-xx**.
7. In the **User List** field, type the user name up to 20 characters.
8. In the **PIN Number** box, type a four-digit password.
9. (For MFC-L9550CDW)
   In the **Card ID (NFC ID)** box, type the card number (up to 16 characters.) [1]

   [1] You can use numbers from 0 - 9 and letters from A - F (not case-sensitive).
10. Select **User List / Restricted Functions** from the drop-down list for each user.

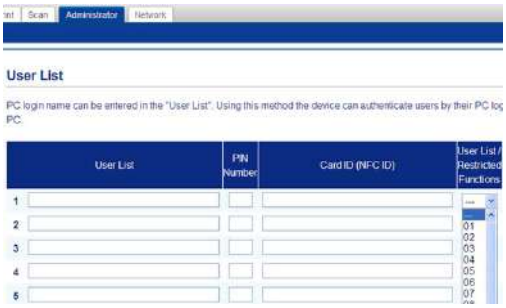

11. Click **Submit**.

Setting up the card authentication users (For MFC-L9550CDW)

Before setting up the card authentication users, you must set up restricted operations and a user list using the web browser.

For more information, see *Configure Secure Function Lock 3.0 Using Web Based Management* on page 9.

1. Changing to the restricted user mode using the Touchscreen (for more information, see *Changing to restricted user mode using the Touchscreen* on page 11).
2. Press

3. Press `Register Card`.
4. Touch the card to the NFC Reader. The Touchscreen displays the card ID.
5. Press `OK`.

NOTE

- To change the card ID, touch the new card to the NFC Reader in step ❹.
- The NFC Reader may not be able to detect when the card is in a case or cover. Always remove the card from a case or cover when you touch the card to the NFC Reader.

Setting up and changing the Public user mode

Public user mode restricts the operations that are available for all users who do not have a password.

When you set up restrictions for Public users, you must do it through Web Based Management or BRAdmin Professional 3 (Windows® only) (see Software and Network User's Guide).

1. Click **Administrator**.
2. Click **Restricted Functions xx-xx**.
3. In the **Public Mode** row, clear the check box to restrict the operation in Public user mode. To configure the maximum page count, select the **On** check box in **Page Limits**, and then type the number in the **Max. Pages** box.

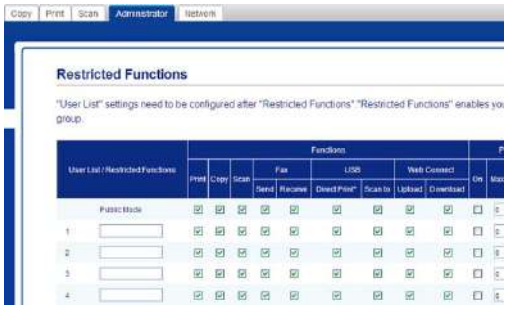

4. Click **Submit**.

Switching Users

This setting allows you to switch between registered restricted users or Public mode when Secure Function Lock is turned on.

Changing to restricted user mode using the Touchscreen

1. Press Public or XXXXX.

   (Where xxxxx is the user's name.)
2. Press `Change User`.
3. Swipe up or down, or press ▲ or ▼ to display your user name.
4. Press your user name.
5. Enter your four-digit user password using the Touchscreen's keyboard. Press `OK`.

NOTE

- If the current ID is restricted for the operation you want, `Access Denied` appears on the Touchscreen.
- If your ID has page limit restrictions and has already reached the maximum number of pages, the Touchscreen displays `Limit Exceeded` or `No Permission` when you try to print. Contact your administrator to check your Secure Function Lock Settings.
- If your ID has **Color Print** restrictions set to disabled, the Touchscreen displays `No Permission` or `Function Locked` when you try to print coloured documents.

Changing to restricted user mode using the NFC Reader (For MFC-L9550CDW)

1. Press to return to the Ready screen.
2. Touch the card to the NFC Reader.
3. When you have successfully logged in, the Touchscreen displays `Authorization Succeeded`.

NOTE

- You can log on by touching the card to the NFC Reader even if the machine is set to Public mode or another user is logged in.
- The NFC Reader may not be able to detect when the card is in a case or cover. Always remove the card from a case or cover when you touch the card to the NFC Reader.

Changing to Public mode using the Touchscreen

1. Press XXXXX.

   (Where xxxxx is the user's name.)
2. Press `Go to Public`.

NOTE

- After a restricted user has finished using the machine, it returns to Public mode after one minute.
- If the operation you want is restricted for all users, `Access Denied` will appear on the Touchscreen and the Change User screen will appear. You cannot access the operation. Contact your administrator to check your Secure Function Lock Settings.
- If **Public Mode** has **Color Print** restrictions set to disabled, the Touchscreen displays `No Permission` or `Function Locked` when you try to print coloured documents.

Active Directory Authentication

Active Directory Authentication restricts the use of the Brother machine. If Active Directory Authentication is enabled, the machine's control panel will be locked. The machine's settings cannot be changed until the user enters the user ID, domain name and password.

Active Directory Authentication includes the following features:

- Store incoming faxes
- Obtain the machine's email address from the LDAP server

You can change the Active Directory Authentication setting using Web Based Management or BRAdmin Professional 3 (Windows®).

For more information about Active Directory Authentication, see
Software and Network User's Guide.

Turning Active Directory Authentication Lock on/off

1. Start your web browser.
2. Type “http://machine’s IP address/” into your browser’s address bar (where “machine’s IP address” is the IP address of the Brother machine).
   - For example:

     http://192.168.1.2/
3. Click **Administrator**.
4. Click **User Restriction Function**.
5. Select **Active Directory Authentication** or **Off**.
6. Click **Submit**.

NOTE

- You need to configure Active Directory Server Settings to enable Active Directory Authentication.
- Control Panel Lock is enabled if Active Directory Server is correctly configured.

IPSec

IPsec (Internet Protocol Security) is a security protocol that uses an optional Internet Protocol function to prevent manipulation and ensure the confidentiality of data transmitted as IP packets. IPsec encrypts data carried over the network, such as print jobs sent from computers to a printer. Because the data is encrypted at the network layer, applications that use a higher-level protocol use IPsec even if the user is not aware of its use.

IPsec supports the following operations:

- IPsec transmissions
- IPsec settings

For more information about IPsec, see Software and Network User's Guide.

Setting Lock

Setting Lock lets you set a password to stop other people from accidentally changing your machine’s settings.

Make a careful note of your password. If you forget it, you will have to reset the passwords stored in the machine. Contact your administrator or Brother customer service.

While the Setting Lock is `On`, you cannot access the machine's settings.

(For MFC models only)

Machine settings cannot be changed through the **Remote Setup** utility while Setting Lock is `On`.

Setting up the administrator password

1. Press .
2. Press `All Settings`.
3. Swipe up or down, or press ▲ or ▼ to display `General Setup`.
4. Press `General Setup`.
5. Swipe up or down, or press ▲ or ▼ to display `Setting Lock`.
6. Press `Setting Lock`.
7. Enter a four-digit number for the new password using the Touchscreen's keyboard.
   Press `OK`.
8. Enter the new password again when the Touchscreen displays `Verify:`.
   Press `OK`.
9. Press .

Changing the Setting Lock administrator password

1. Press .
2. Press `All Settings`.
3. Swipe up or down, or press ▲ or ▼ to display `General Setup`.
4. Press `General Setup`.
5. Swipe up or down, or press ▲ or ▼ to display `Setting Lock`.
6. Press `Setting Lock`.
7. Press `Set Password`.
8. Enter the old four-digit password using the Touchscreen's keyboard.
   Press `OK`.
9. Enter a four-digit number for the new password using the Touchscreen's keyboard.
   Press `OK`.
10. Re-enter the new password again when the Touchscreen displays `Verify:`.
    Press `OK`.
11. Press .

Turning Setting Lock on/off

If you enter the wrong password, the Touchscreen displays `Wrong Password`. Enter the correct password.

Turning Setting Lock on

1. Press .
2. Press `All Settings`.
3. Swipe up or down, or press ▲ or ▼ to display `General Setup`.
4. Press `General Setup`.
5. Swipe up or down, or press ▲ or ▼ to display `Setting Lock`.
6. Press `Setting Lock`.
7. Press `Lock Off⇒On`.
8. Enter the registered four-digit administrator password using the Touchscreen's keyboard.
   Press `OK`.

Turning Setting Lock off

1. Press

   on the Touchscreen.
2. Enter the registered four-digit administrator password using the Touchscreen's keyboard.
   Press `OK`.

Dial Restriction (MFC models only)

This feature is to prevent users from sending a fax or call to a wrong number by mistake. You can set the machine to restrict dialling when you use the dial pad, Address Book and Shortcuts.

If you choose `Off`, the machine does not restrict the dialling method.

If you choose `Enter # Twice`, the machine will prompt you to re-enter the number, and then if you re-enter the same number correctly, the machine will start dialling. If you enter a different number, the Touchscreen displays an error message.

If you choose `On`, the machine will restrict all fax sending and outbound calls for that dialling method.

Dial pad restriction

1. Press .
2. Press `All Settings`.
3. Swipe up or down, or press ▲ or ▼ to display `Fax`.
4. Press `Fax`.
5. Swipe up or down, or press ▲ or ▼ to display `Dial Restriction`.
6. Press `Dial Restriction`.
7. Press `Dial Pad`.
8. Press `Enter # Twice`, `On` or `Off`.
9. Press .

Address Book restriction

1. Press .
2. Press All Settings.
3. Swipe up or down, or press ▲ or ▼ to display Fax.
4. Press Fax.
5. Swipe up or down, or press ▲ or ▼ to display Dial Restriction.
6. Press Dial Restriction.
7. Press Address Book.
8. Press Enter # Twice, On or Off.
9. Press .

Shortcuts restriction

1. Press .
2. Press All Settings.
3. Swipe up or down, or press ▲ or ▼ to display Fax.
4. Press Fax.
5. Swipe up or down, or press ▲ or ▼ to display Dial Restriction.
6. Press Dial Restriction.
7. Press Shortcuts.
8. Press Enter # Twice, On or Off.
9. Press .

LDAP server restriction

1. Press .
2. Press All Settings.
3. Swipe up or down, or press ▲ or ▼ to display Fax.
4. Press Fax.
5. Swipe up or down, or press ▲ or ▼ to display Dial Restriction.
6. Press Dial Restriction.
7. Press LDAP Server.
8. Press Enter # Twice, On or Off.
9. Press .

NOTE

- The Enter # Twice setting will not work if you lift an external phone or press Hook before entering the number. You will not be asked to re-enter the number.
- You cannot restrict dialing when using Redial/Pause.
- If you chose On or Enter # Twice, you cannot use the Broadcasting feature.

3 Sending a fax (MFC models only)

Additional sending options

Sending faxes using multiple settings

Before you send a fax, you can change any combination of these settings:

- 2-sided Fax [1]
- Contrast
- Fax Resolution
- Real Time TX
- Overseas Mode
- Delayed Fax
- Batch TX
- Coverpage Note
- Coverpage Setup
- Broadcasting

[1] For MFC-L8850CDW and MFC-L9550CDW

1. Do one of the following:
   - When Fax Preview is set to Off, press (Fax).
   - When Fax Preview is set to On, press (Fax) and Sending Faxes.

   The Touchscreen displays:

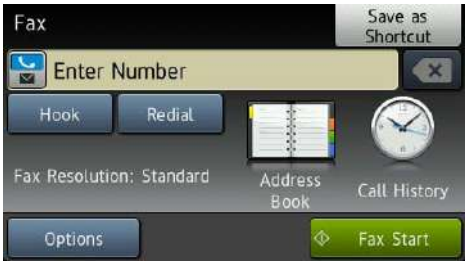

2. Press Options.
3. Swipe up or down, or press ▲ or ▼ to display the setting you want, and then press the setting.
4. Press the option you want.
5. Do one of the following:
   - Repeat steps ❸ and ❹ to change more settings.
   - If you are finished choosing settings, press OK. Go to the next step for sending your fax.

NOTE

- Most settings are temporary and the machine returns to its default settings after you send a fax.
- You can save some of the settings you use most often by setting them as the default settings. These settings will stay until you change them again (see *Setting your changes as the new default* on page 25).
- You can also save some of the settings you use most often by setting them as a Shortcut (see *Saving fax options as a Shortcut* on page 26).

Changing a 2-sided fax layout (MFC-L8850CDW and MFC-L9550CDW)

You must choose a 2-sided scanning format before you send a 2-sided fax. The format you choose will depend on the layout of your 2-sided document.

1. Load your document in the ADF.
2. Do one of the following:
   - When Fax Preview is set to `Off`, press (`Fax`).
   - When Fax Preview is set to `On`, press (`Fax`) and `Sending Faxes`.
3. Press `Options`.
4. Swipe up or down, or press ▲ or ▼ to display `2-sided Fax`.
5. Press `2-sided Fax`.
6. Do one of the following:
   - If your document is flipped on the Long edge, press `2-sided Scan`: `Long Edge`.

Long edge	
Portrait	Landscape
	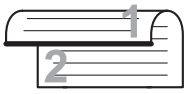

   - If your document is flipped on the Short edge, press `2-sided Scan`: `Short Edge`.

Short edge	
Portrait	Landscape

Contrast

For most documents the default setting of Auto will give the best results. Auto automatically chooses the appropriate contrast for your document.

If your document is very light or very dark, changing the contrast may improve the quality of the fax.

Select Dark to make the faxed document lighter.

Select Light to make the faxed document darker.

1. Do one of the following:
   - When Fax Preview is set to Off, press (Fax).
   - When Fax Preview is set to On, press (Fax) and Sending Faxes.
2. Press Options.
3. Swipe up or down, or press ▲ or ▼ to display Contrast.
4. Press Contrast.
5. Press Auto, Light or Dark.

NOTE

Even if you choose Light or Dark, the machine will send the fax using the Auto setting if you choose Photo as the Fax Resolution.

Changing Fax Resolution

The quality of a fax can be improved by changing the Fax Resolution. This is a temporary setting that will only be active for your next fax.

1. Do one of the following:
   - When Fax Preview is set to Off, press (Fax).
   - When Fax Preview is set to On, press (Fax) and Sending Faxes.
2. Press Options.
3. Swipe up or down, or press ▲ or ▼ to display Fax Resolution.
4. Press Fax Resolution.
5. Press Standard, Fine, S.Fine or Photo.

NOTE

You can choose four different resolution settings.

Black & white	
Standard	Appropriate for most typed documents.
Fine	Good for small print and transmits a little slower than Standard resolution.
S.Fine	Good for small print or artwork and transmits slower than Fine resolution.
Photo	Use when the document has varying shades of grey or is a photograph. This has the slowest transmission time.

The time taken to send will increase when selecting S.Fine or Photo.

Additional sending operations

Sending a fax manually

Manual transmission

Manual transmission lets you hear the dialling, ringing and fax-receiving tones while sending a fax.

1. Load your document.
2. Do one of the following:
   - When Fax Preview is set to `Off`, press (`Fax`).
   - When Fax Preview is set to `On`, press (`Fax`) and `Sending Faxes`.
3. Press `Hook` and listen for a dial tone.
4. Dial the fax number.
5. When you hear the fax tones, press `Fax Start`.
   - If you are using the scanner glass, press `Send`.

Dual access

You can dial a number and start scanning the fax into memory—even when the machine is sending from memory, receiving faxes or printing computer jobs. The Touchscreen displays the new job number.

The number of pages you can scan into the memory will vary depending on the type of information that is printed on them.

NOTE

If you get an `Out of Memory` message while scanning the first page of a fax, press to cancel scanning. If you get an `Out of Memory` message while scanning a subsequent page, you can press `Send Now` to send the pages scanned so far, or press to cancel the operation.

Broadcasting

Broadcasting lets you send the same fax message to more than one fax number. You can include Groups, Address Book numbers and up to 50 manually dialled numbers in the same broadcast.

You can broadcast up to 350 different numbers.

Before you begin the broadcast

Address Book numbers must be stored in the machine's memory before they can be used in a broadcast (see Basic User's Guide).

Group numbers must also be stored in the machine's memory before they can be used in a broadcast. Group numbers include many stored Address Book numbers for easier dialling (see *Setting up Groups for Broadcasting* on page 39).

How to broadcast a fax

1. Load your document.
2. Do one of the following:
   - When Fax Preview is set to `Off`, press (`Fax`).
   - When Fax Preview is set to `On`, press (`Fax`) and `Sending Faxes`.
3. Press `Options`.
4. Swipe up or down, or press ▲ or ▼ to display `Broadcasting`.
5. Press `Broadcasting`.
6. Press `Add Number`.

NOTE

If you downloaded Internet Fax:

If you want to broadcast using an E-mail address, press , enter the E-mail address (see Basic User's Guide), and press `OK`.

7. You can add numbers to the broadcast in the following ways:
   - Press `Add Number` and enter a number using the Touchscreen's keyboard (see Basic User's Guide).

     Press `OK`.
   - Press `Add from Address book`. Swipe up or down, or press ▲ or ▼ to display the number you want to add to the broadcast. Select the check boxes of the numbers you want to add to the broadcast. After you select all the numbers you want, press `OK`.
   - Press `Search in Address book`. Press the first letter of the name, and then press `OK`. Press the name, and then press the number you want to add.

8 After you enter all the fax numbers by repeating steps ❻ and ❼, press OK.

9 Press Fax Start.
After the broadcast is finished, the machine will print a broadcast report to let you know the results.

NOTE

- If you did not use up any of the numbers for Groups, you can broadcast faxes to as many as 350 different numbers.
- The machine's available memory will vary depending on the types of jobs in the memory and the numbers used for broadcasting. If you broadcast to the maximum number available, you will not be able to use dual access and delayed fax.
- If the Out of Memory message appears, press ✕ to stop the job. If more than one page has been scanned, press Send Now to send the portion that is in the machine's memory.

Cancelling a Broadcast in progress

While broadcasting you can cancel the fax currently being sent or the whole broadcast job.

1 Press ✕.

2 Do one of the following:
- To cancel the entire broadcast, press Entire Broadcast. Go to step ❸.
- To cancel the current job, press the button that displays the number or name being dialled. Go to step ❹.
- To exit without cancelling, press ✕.

3 When the Touchscreen asks if you want to cancel the entire broadcast, do one of the following:
- Press Yes to confirm.
- To exit without cancelling, press No.

4 Do one of the following:
- To cancel the current job, press Yes.
- To exit without cancelling, press No.

Real Time Transmission

When you are sending a fax, the machine will scan the document into the memory before sending it. As soon as the telephone line is free, the machine will start dialling and sending.

Sometimes, you may want to send an important document immediately without waiting for memory transmission. You can turn on `Real Time TX`.

NOTE

- If the memory is full and you are sending a fax from the ADF, the machine will send the document in real time (even if `Real Time TX` is set to `Off`). If the memory is full, faxes from the scanner glass cannot be sent until you clear some of the memory.
- In Real Time Transmission, the automatic redial feature does not work when using the scanner glass.

1. Load your document.
2. Do one of the following:
   - When Fax Preview is set to `Off`, press (`Fax`).
   - When Fax Preview is set to `On`, press (`Fax`) and `Sending Faxes`.
3. Press `Options`.
4. Swipe up or down, or press ▲ or ▼ to display `Real Time TX`.
5. Press `Real Time TX`.
6. Press `On` (or `Off`).
7. Press `OK`.
8. Enter the fax number.
9. Press `Fax Start`.

Overseas Mode

If you are having difficulty sending a fax overseas due to a bad connection, then turning on Overseas Mode may help.

This is a temporary setting that will only be active for your next fax.

1. Load your document.
2. Do one of the following:
   - When Fax Preview is set to `Off`, press (`Fax`).
   - When Fax Preview is set to `On`, press (`Fax`) and `Sending Faxes`.
3. Press `Options`.
4. Swipe up or down, or press ▲ or ▼ to display `Overseas Mode`.
5. Press `Overseas Mode`.
6. Press `On`.
7. Press `OK`.
8. Enter the fax number.
9. Press `Fax Start`.

Delayed Fax

You can store up to 50 faxes in the memory to be sent within a 24-hour period.

1. Load your document.
2. Do one of the following:
   - When Fax Preview is set to `Off`, press (`Fax`).
   - When Fax Preview is set to `On`, press (`Fax`) and `Sending Faxes`.
3. Press `Options`.
4. Swipe up or down, or press ▲ or ▼ to display `Delayed Fax`.
5. Press `Delayed Fax`.
6. Press `Delayed Fax`.
7. Press `On`.
8. Press `Set Time`.
9. Enter the time you want the fax to be sent (in 24-hour format) using the Touchscreen's keyboard.
   Press `OK`.

NOTE

The number of pages you can scan into the memory depends on the type of information printed on each page.

Delayed batch transmission

Before sending the delayed faxes, your machine will help you economize by sorting all the faxes in the memory by destination and scheduled time.

All delayed faxes that are scheduled to be sent at the same time to the same fax number will be sent as one fax to save transmission time.

1. Press .
2. Press `All Settings`.
3. Swipe up or down, or press ▲ or ▼ to display `Fax`.
4. Press `Fax`.
5. Swipe up or down, or press ▲ or ▼ to display `Setup Send`.
6. Press `Setup Send`.
7. Press `Batch TX`.
8. Press `On` or `Off`.
9. Press .

Checking and cancelling waiting jobs

Check which jobs are still waiting in the memory to be sent. If there are no jobs, the Touchscreen displays `No Jobs Waiting`. You can cancel a fax job that is stored and waiting in the memory.

1. Press .
2. Press `All Settings`.
3. Swipe up or down, or press ▲ or ▼ to display `Fax`.
4. Press `Fax`.
5. Swipe up or down, or press ▲ or ▼ to display `Remaining Jobs`.
6. Press `Remaining Jobs`.
   Jobs that are waiting will appear on the Touchscreen.
7. Swipe up or down, or press ▲ or ▼ to scroll through the waiting jobs and press the job you want to cancel.
8. Press `Cancel`.
9. Do one of the following:
   - To cancel, press `Yes`. If you want to cancel another job repeat step ❼.
   - To exit without cancelling, press `No`.
10. When you have finished cancelling jobs, press .

Setting your changes as the new default

You can save the fax settings for `Fax Resolution`, `Contrast`, `Glass Scan Size`, `Real Time TX`, `Coverpage Setup` and `Overseas Mode` you use most often by setting them as the default. These settings will stay until you change them again.

1. Do one of the following:
   - When Fax Preview is set to `Off`, press (`Fax`).
   - When Fax Preview is set to `On`, press (`Fax`) and `Sending Faxes`.
2. Press `Options`.
3. Swipe up or down, or press ▲ or ▼ to choose the setting you want to change, and then press the new option.

   Repeat this step for each setting you want to change.
4. After changing the last setting, swipe up or down, or press ▲ or ▼ to display `Set New Default`.
5. Press `Set New Default`.
6. The Touchscreen asks you to confirm the change to the new default settings. Press `Yes` to confirm.
7. Press .

Restoring all fax settings to the factory settings

You can restore all the fax settings you have changed to the factory settings. These settings will stay until you change them again.

1. Do one of the following:
   - When Fax Preview is set to `Off`, press (`Fax`).
   - When Fax Preview is set to `On`, press (`Fax`) and `Sending Faxes`.
2. Press `Options`.
3. After changing the last setting, swipe up or down, or press ▲ or ▼ to display `Factory Reset`.
4. Press `Factory Reset`.
5. The Touchscreen asks you to confirm to change back to the factory settings. Press `Yes` to confirm.
6. Press .

Saving fax options as a Shortcut

You can store all the new fax options you use frequently by saving them as a Shortcut.

1. Do one of the following:
   - When Fax Preview is set to `Off`, press (`Fax`).
   - When Fax Preview is set to `On`, press (`Fax`) and `Sending Faxes`.
2. Enter the fax number.
3. Press `Options`.
4. Swipe up or down, or press ▲ or ▼ to display `Fax Resolution`, `2-sided Fax` [1], `Contrast`, `Real Time TX`, `Overseas Mode` or `Glass Scan Size`, and then press the setting you want to change. Then press the new option you want.
   Repeat this step for each setting you want to change.
5. When you have finished choosing new options, press `OK`.
6. Press `Save as Shortcut`.
7. Confirm the displayed list of options you chose for the Shortcut, and then press `OK`.
8. Press a tab from 1 to 8.
9. Press where you have not added a Shortcut.
10. Enter a name for the Shortcut using the Touchscreen's keyboard. (To help you enter letters, see Basic User's Guide.) Press `OK`.
11. Press `OK` to confirm.

[1] For MFC-L8850CDW and MFC-L9550CDW

Electronic cover page

You will need to have programmed your Station ID in order to use this feature (see Basic User's Guide).

You can automatically send a cover page. Your cover page includes your Station ID, a comment, and the name stored in the Address Book.

You can choose one of the following preset comments:

`1.Note Off`

`2.Please Call`

`3.Urgent`

`4.Confidential`

Instead of using one of the preset comments, you can enter two personal messages of your own, up to 27 characters long.

(See *Composing your own comments* on page 27.)

`5.`(User Defined)

`6.`(User Defined)

Composing your own comments

You can set up two comments of your own.

1. Press .
2. Press `All Settings`.
3. Swipe up or down, or press ▲ or ▼ to display `Fax`.
4. Press `Fax`.
5. Swipe up or down, or press ▲ or ▼ to display `Setup Send`.
6. Press `Setup Send`.
7. Press `Coverpage Setting`.
8. Press `Coverpage Note`.
9. Press `5.` or `6.` to store your own comment.
10. Enter your own comment using the Touchscreen's keyboard.
    Press `OK`.
    Press

    to choose numbers, letters or special characters (see Basic User's Guide).
11. Press .

Send a cover page for the next fax

If you want to send a cover page for the next fax, you can add the cover page.

1. Do one of the following:
   - When Fax Preview is set to `Off`, press (`Fax`).
   - When Fax Preview is set to `On`, press (`Fax`) and `Sending Faxes`.
2. Press `Options`.
3. Swipe up or down, or press ▲ or ▼ to display `Coverpage Setup`.
4. Press `Coverpage Setup`.
5. Press `Coverpage Setup`.
6. Press `On`.
7. Press `Coverpage Note`.
8. Swipe up or down, or press ▲ or ▼ to choose the comment you want to use, and then press the comment.
   Press .
9. Press `OK`.
10. Enter the fax number.
11. Press `Fax Start`.

Using a printed cover page

If you want a printed cover page you can write on, print the sample page and attach it to your fax.

1. Press .
2. Press `All Settings`.
3. Swipe up or down, or press ▲ or ▼ to display `Fax`.
4. Press `Fax`.
5. Swipe up or down, or press ▲ or ▼ to display `Setup Send`.
6. Press `Setup Send`.
7. Press `Coverpage Setting`.
8. Press `Print Sample`.
9. Press `OK`.

Destination Display

When you send a fax, the machine displays the information from the Address Book or the number you dialled. You can set the machine to hide the destination information on the Touchscreen.

1. Press .
2. Press `All Settings`.
3. Swipe up or down, or press ▲ or ▼ to display `Fax`.
4. Press `Fax`.
5. Swipe up or down, or press ▲ or ▼ to display `Setup Send`.
6. Press `Setup Send`.
7. Press `Destination`.
8. Press `Hidden` or `Display`.
9. Press .

4 Receiving a fax (MFC models only)

Memory Receive Options

Memory Receive lets you receive faxes while you are away from the machine.

You can use *only one* Memory Receive option at a time:

- Fax Forwarding
- Fax Storage
- Off

Fax Forwarding

The Fax Forwarding feature lets you automatically forward your received faxes to another machine or to an email address. If you choose `Backup Print: On`, the machine will also print the fax.

1. Press .
2. Press `All Settings`.
3. Swipe up or down, or press ▲ or ▼ to display `Fax`.
4. Press `Fax`.
5. Swipe up or down, or press ▲ or ▼ to display `Setup Receive`.
6. Press `Setup Receive`.
7. Swipe up or down, or press ▲ or ▼ to display `Memory Receive`.
8. Press `Memory Receive`.
9. Press `Fax Forward`.
10. Do one of the following:
    - Press `Manual` to enter the forwarding fax number (up to 20 characters) using the Touchscreen's keyboard (see Basic User's Guide).

      Press `OK`.
    - Press `Address Book`.

      Swipe up or down, or press ▲ or ▼ to scroll until you find the fax number where you want your faxes forwarded.

      Press the fax number or E-mail address you want.

NOTE

- You can enter an E-mail address by pressing on the Touchscreen.
- If you would like to forward to an email address you must setup your SMTP settings or something similar.
- If you choose a Group number from the Address Book, the faxes will be forwarded to multiple fax numbers.

11. If `Fax Preview` is set to `Off`, press `Backup Print: On` or `Backup Print: Off`.

IMPORTANT

- If you choose `Backup Print: On`, the machine will also print received faxes at your machine so you will have a copy.
- When `Fax Preview` is set to `On`, the backup print feature does not work.

12. Press .

Fax Storage

The Fax Storage feature lets you store your received faxes in the machine's memory. You can retrieve stored fax messages from a fax machine at another location using the remote retrieval commands (see *Retrieving fax messages* on page 35).

Your machine will print a backup copy of each stored fax.

1. Press .
2. Press `All Settings`.
3. Swipe up or down, or press ▲ or ▼ to display `Fax`.
4. Press `Fax`.
5. Swipe up or down, or press ▲ or ▼ to display `Setup Receive`.
6. Press `Setup Receive`.
7. Swipe up or down, or press ▲ or ▼ to display `Memory Receive`.
8. Press `Memory Receive`.
9. Press `Fax Storage`.

NOTE

To turn off Fax Storage, press `Off`.

10. Press .

Changing Memory Receive Options

If received faxes are in your machine's memory when you change the Memory Receive operations, the Touchscreen will ask you one of the following questions:

If received faxes have already been printed

■ `Erase all documents?`

- If you press `Yes`, faxes in the memory will be erased before the setting changes.
- If you press `No`, faxes in the memory will not be erased and the setting will be unchanged.

If unprinted faxes are in the memory

■ `Print all faxes?`

- If you press `Yes`, faxes in the memory will be printed before the setting changes. If a backup copy has already been printed.
- If you press `No`, faxes in the memory will not be printed and the setting will be unchanged.

IMPORTANT

If you choose Backup Print On, the machine will also print received faxes at your machine so you will have a copy. This is a safety feature in case there is a power failure before the fax is forwarded or a problem at the receiving machine.

Turning off Memory Receive Options

1. Press .
2. Press `All Settings`.
3. Swipe up or down, or press ▲ or ▼ to display `Fax`.
4. Press `Fax`.
5. Swipe up or down, or press ▲ or ▼ to display `Setup Receive`.
6. Press `Setup Receive`.
7. Swipe up or down, or press ▲ or ▼ to display `Memory Receive`.
8. Press `Memory Receive`.
9. Press `Off`.

NOTE

The Touchscreen will give you more options if there are received faxes still in your machine's memory (see *Changing Memory Receive Options* on page 31).

10. Press .

Remote retrieval

You can call your machine from any touch-tone phone or fax machine and then use the remote access code and remote commands to retrieve fax messages.

Setting a Remote Access Code

The Remote Access Code lets you access the remote retrieval features when you are away from your machine. Before you can use the remote access and retrieval features, you must set up your own code. The factory default code is the inactive code (– – –✱).

1. Press .
2. Press `All Settings`.
3. Swipe up or down, or press ▲ or ▼ to display `Fax`.
4. Press `Fax`.
5. Swipe up or down, or press ▲ or ▼ to display `Remote Access`.
6. Press `Remote Access`.
7. Enter a three-digit code using the numbers `0` to `9`, `*` or `#` using the Touchscreen's keyboard.
   Press `OK`.

NOTE

DO NOT use the same code used for your Remote Activation code (✱**51**) or Remote Deactivation code (**#51**) (see Basic User's Guide). (For New Zealand: Remote Activation code (✱**91**) or Remote Deactivation code (**#91**))

8. Press .

NOTE

You can change your code at any time. To make your code inactive, press and hold ⌫ at step ❼ to restore the default setting – – –✱, and then press `OK`.

Using your Remote Access Code

1. Dial your fax number from a telephone or another fax machine using touch tone dialling.
2. When your machine answers, during a period of silence enter your Remote Access Code .
3. The machine signals if it has received messages:
   - **1 long beep -- Fax messages**
   - **No beeps -- No messages**
4. When the machine gives two short beeps, enter a command (see *Remote fax commands* on page 34). The machine will hang up if you wait longer than 30 seconds to enter a command. The machine will beep three times if you enter an invalid command.
5. Press **9 0** to reset the machine when you are finished.
6. Hang up.

NOTE

- If your machine is set to `Manual` mode and you want to use the remote retrieval features, wait for about 100 seconds after it starts ringing, and then enter the remote access code within 30 seconds.
- This setting may not be available in some countries or supported by your local telephone company.

Remote fax commands

Follow the commands in the table to access features when you are away from the machine. When you call the machine and enter your remote access code (3 digits followed by ∗), the system will give two short beeps and you must enter a remote command.

Remote commands		Operation details
95	**Change the Fax Forwarding or Fax Storage Settings**	
	1 OFF	You can choose `Off` after you have retrieved or erased all your messages.
	2 Fax Forwarding	One long beep means the change is accepted. If you hear three short beeps, you cannot make changes because the conditions have not been met (for example, registering a fax forwarding number). You can register the maximum number of rings (see *Changing the Fax Forwarding number* on page 35). When you have registered the number, fax forwarding will work.
	4 Fax Forwarding number	
	6 Fax Storage	
96	**Retrieve a fax**	
	2 Retrieve all faxes	Enter the number of a remote fax machine to receive stored fax messages (see *Retrieving fax messages* on page 35).
	3 Erase faxes from the memory	If you hear one long beep, fax messages have been erased from the memory.
97	**Check the receiving status**	
	1 Fax	You can check whether your machine has received any faxes. If yes, you will hear one long beep. If no, you will hear three short beeps.
98	**Change the Receive Mode**	
	1 External TAD	If you hear one long beep, your change has been accepted.
	2 Fax/Tel	
	3 Fax Only	
90	**Exit**	Press **9 0** to stop remote retrieval. Wait for the long beep, then replace the handset.

Retrieving fax messages

You can call your machine from any touch-tone telephone or fax machine and have your fax messages sent to another machine. Before you use this feature, you have to turn on Fax Storage or Fax Preview (see *Fax Storage* on page 31 or Basic User's Guide).

1. Dial your fax number.
2. When your machine answers, during a period of silence enter your Remote Access Code (3 digits followed by ∗). If you hear one long beep, you have messages.
3. When you hear two short beeps, press **9 6 2**.
4. Wait for a long beep, and then use the Touchpanel to enter the number of the remote fax machine where you want your fax messages sent, followed by **##** (up to 20 digits).

NOTE

You cannot use ∗ and # as dial numbers. However, press **#** if you want to create a pause.

5. Hang up after you hear your machine beep. Your machine will call the other fax machine, which will then print your fax messages.

Changing the Fax Forwarding number

You can change your fax forwarding number from another touch-tone telephone or fax machine.

1. Dial your fax number.
2. When your machine answers, enter your Remote Access Code (3 digits followed by ∗) during a period of silence. If you hear one long beep, you have messages.
3. When you hear two short beeps, press **9 5 4**.
4. Wait for the long beep, enter the new number (up to 20 digits) of the remote fax machine you want your fax messages forwarded to using the Touchpanel, then enter **##**.

NOTE

You cannot use ∗ and # as dial numbers. However, press **#** if you want to create a pause.

5. Press **9 0** to stop Remote Access when you have finished.
6. Hang up after you hear your machine beep.

Additional receiving operations

Printing a reduced incoming fax

If you choose On, the machine reduces each page of an incoming fax to fit on one page of A4, Letter, Legal or Folio sized paper.

The machine calculates the reduction ratio by using the page size of the fax and your Paper Size settings (see Basic User's Guide).

1. Press .
2. Press All Settings.
3. Swipe up or down, or press ▲ or ▼ to display Fax.
4. Press Fax.
5. Swipe up or down, or press ▲ or ▼ to display Setup Receive.
6. Press Setup Receive.
7. Swipe up or down, or press ▲ or ▼ to display Auto Reduction.
8. Press Auto Reduction.
9. Press On or Off.
10. Press .

2-sided printing for Fax mode

Your machine prints received faxes on both sides of the paper when 2-sided is set to On.

Use A4 [1] sized paper for this setting (60 to 105 gsm).

[1] For Philippines: Letter, Legal or Folio (8.5 in. × 13 in.)

1. Press .
2. Press All Settings.
3. Swipe up or down, or press ▲ or ▼ to display Fax.
4. Press Fax.
5. Swipe up or down, or press ▲ or ▼ to display Setup Receive.
6. Press Setup Receive.
7. Swipe up or down, or press ▲ or ▼ to display 2-sided.
8. Press 2-sided.
9. Press On or Off.
10. Press .

NOTE

When 2-sided is turned on, incoming faxes will automatically be reduced to fit the size of paper in the paper tray.

Setting the Fax Receive Stamp

You can set the machine to print the received date and time at the top centre of each received fax page.

1. Press .
2. Press `All Settings`.
3. Swipe up or down, or press ▲ or ▼ to display `Fax`.
4. Press `Fax`.
5. Swipe up or down, or press ▲ or ▼ to display `Setup Receive`.
6. Press `Setup Receive`.
7. Swipe up or down, or press ▲ or ▼ to display `Fax Rx Stamp`.
8. Press `Fax Rx Stamp`.
9. Press `On` or `Off`.
10. Press .

NOTE

- Make sure you have set the current date and time on the machine (see Basic User's Guide).
- *If you downloaded Internet Fax:*

  The received time and date will not appear when using Internet Fax.

Printing a fax from the memory

If you choose `Fax Storage`, you can still print a fax from the memory when you are at your machine (see *Fax Storage* on page 31).

1. Press .
2. Press `All Settings`.
3. Swipe up or down, or press ▲ or ▼ to display `Fax`.
4. Press `Fax`.
5. Press ▲ or ▼ to display `Print Document`.
6. Press `Print Document`.
7. Press `OK`.
8. Press .

Out of Paper Reception

As soon as the paper tray becomes empty during fax reception, the Touchscreen displays `No Paper`. Load paper in the paper tray (see Basic User's Guide).

Incoming faxes will continue to be stored in the memory until the memory becomes full or paper is loaded in the paper tray. When the memory is full the machine will stop automatically answering calls. To print the faxes, load fresh paper in the tray.

5 Dialling and storing numbers (MFC models only)

Additional dialling operations

Combining Address Book numbers

Sometimes you may want to choose from several long-distance carriers when you send a fax. Rates may vary depending on the time and destination. To take advantage of low rates, you can store the access codes of long-distance carriers and credit card numbers as Address Book numbers. You can store these long dialling sequences by dividing them and setting them up as separate Address Book numbers in any combination. You can even include manual dialling using the dial pad (see Basic User's Guide).

For example, you might have stored ‘01632’ in Address Book: Brother 1 and ‘960555’ in Address Book: Brother 2. You can use them both to dial ‘01632-960555’ if you press the following:

1. Press (Fax).
2. Press Address Book.
3. Swipe up or down, or press ▲ or ▼ to display the number of Brother 1.
4. Press the number.
5. Press Apply.
6. Press Address Book.
7. Swipe up or down, or press ▲ or ▼ to display the number of Brother 2.
8. Press the number.
9. Press Apply.
10. Press Fax Start. You will dial ‘01632-960555’.

To temporarily change a number, you can substitute part of the number by pressing it on the dial pad. For example, to change the number to ‘01632-960556’, you could enter the number (Brother 1: 01632) using Address Book, press Apply and then press **960556** on the dial pad.

NOTE

If you must wait for another dial tone or signal at any point in the dialling sequence, create a pause in the number by pressing Pause. Each key press adds a 3.5-second delay. You can press Pause as many times as needed to increase the length of the pause.

Additional ways to store numbers

Storing Address Book numbers from Outgoing Calls

You can store Address Book numbers from the Outgoing Call history.

1. Press (Fax).
2. Press Call History.
3. Press Outgoing Call.
4. Press the number.
5. Press Edit.
6. Press Add to Address Book.
7. Press Name.
8. Enter the name (up to 15 characters) using the Touchscreen's keyboard. (To help you enter letters, see Basic User's Guide.)
   Press OK.
9. Press OK to confirm the fax or telephone number.
10. Press .

Setting up Groups for Broadcasting

A Group, which can be stored in the Address Book, allows you to send the same fax message to many fax numbers by pressing Fax, Address Book, Group name, Apply and Fax Start.

First, you must store each fax number in Address Book (see Basic User's Guide). Then you can include them as numbers in the Group. Each Group uses up an Address Book number. You can store up to 20 Groups, or you can assign up to 299 numbers to a large Group. (See *Broadcasting* on page 21.)

1. Press (Fax).
2. Press Address Book.
3. Press Edit.
4. Press Setup Groups.
5. Press Name.
6. Enter the Group name (up to 15 characters) using the Touchscreen's keyboard.
   Press OK.
7. Press Add/Delete.
8. Add Address Book numbers to the Group by pressing them to display a red checkmark.
   Press OK.
9. Read and confirm the displayed list of names and numbers you have chosen, and then press OK to save your Group.

10 Do one of the following:

- To store another Group for broadcasting, repeat steps ❸ - ❾.
- To finish storing Groups for broadcasting, press .

NOTE

You can print a list of all the Address Book numbers (see *Reports* on page 43).

Changing a Group name

1 Press (Fax).

2 Press Address Book.

3 Press Edit.

4 Press Change.

5 Swipe up or down, or press ▲ or ▼ to display the Group you want.

6 Press the Group name.

7 Press the Name.

8 Enter the new Group name (up to 15 characters) using the Touchscreen's keyboard.
Press OK.

NOTE

How to change the stored name:

To change a character, press ◀ or ▶ to position the cursor to highlight the incorrect character, and then press . Enter the new character (see Basic User's Guide).

9 Press OK.

10 Press .

Deleting a Group

1 Press (Fax).

2 Press Address Book.

3 Press Edit.

4 Press Delete.

5 Swipe up or down, or press ▲ or ▼ to display the Group you want.

6 Press the Group name.
Press OK.

7 When the Touchscreen asks Erase this data?, press Yes.

8 Press .

Adding or deleting Group numbers

1. Press (Fax).
2. Press Address Book.
3. Press Edit.
4. Press Change.
5. Swipe up or down, or press ▲ or ▼ to display the Group you want.
6. Press the Group name.
7. Swipe up or down, or press ▲ or ▼ to display Add/Delete.
8. Press Add/Delete.
9. Swipe up or down, or press ▲ or ▼ to display the number you want to add or delete.
10. Do the following for each number you want to change:
    - To add a number to the Group, press the check box of the number to add a check mark.
    - To delete a number from the Group, press the check box of the number to remove the check mark.
11. Press OK.
12. Press OK.
13. Press .

6 Printing reports

Fax reports (MFC models only)

Press on the Touchscreen to set up the Transmission Verification Report and the Journal Period.

Transmission Verification Report

You can use the Transmission Verification Report as proof that you sent a fax (see Basic User's Guide).

Fax Journal (Activity Report)

You can set the machine to print a journal at specific intervals (every 50 faxes, 6, 12 or 24 hours, or 2 or 7 days).
The factory setting is `Every 50 Faxes`.

If you set the interval to `Off`, you can still print the report by following the procedure in *Reports* on page 43.

1. Press .
2. Press `All Settings`.
3. Swipe up or down, or press ▲ or ▼ to display `Fax`.
4. Press `Fax`.
5. Swipe up or down, or press ▲ or ▼ to display `Report Setting`.
6. Press `Report Setting`.
7. Press `Journal Period`.
8. Press `Journal Period`.
9. Swipe up or down, or press ▲ or ▼ to choose an interval.
   If you choose `Every 50 Faxes`, go to step ⓭.
   - 6, 12, 24 hours, 2 or 7 days

     The machine will print the report at the chosen time and then erase all jobs from its memory.

     If the machine's memory becomes full with 200 jobs before the time you chose has passed, the machine will print the Journal early and then erase all jobs from the memory. If you want an extra report before it is due to print, you can print it without erasing the jobs from the memory.
   - Every 50 Faxes

     The machine will print the Journal when the machine has stored 50 jobs.
10. Press `Time`, and then enter the time to start printing (in 24-hour format) using the Touchscreen's keyboard.
    (For example: enter 19:45 for 7:45 PM.)
    Press `OK`.
11. If you chose `Every 7 Days`, press `Day`.
12. Swipe up or down, or press ▲ or ▼ display `Every Monday`, `Every Tuesday`, `Every Wednesday`, `Every Thursday`, `Every Friday`, `Every Saturday` or `Every Sunday`, and then press the first day of the 7-day countdown.
13. Press .

Reports

The following reports are available:

1 `XMIT Verify` (MFC models only)

Displays the Transmission Verification Report for your last outgoing 200 faxes and prints the last report.

2 `Address Book` (MFC models only)

Prints a list of names and numbers stored in the Address Book memory, in alphabetical order.

3 `Fax Journal` (MFC models only)

Prints a list of information about your last 200 incoming and outgoing faxes. (TX: transmit.) (RX: receive.)

4 `User Settings`

Prints a list of your current settings.

5 `Printer Settings`

Prints a list of your current printer settings.

6 `Network Configuration`

Prints a list of your current network settings.

7 `Drum Dot Print`

Prints the Drum Dot Check Sheet to troubleshoot a dotted print problem.

8 `WLAN Report` (MFC-L8600CDW, MFC-L8650CDW, MFC-L8850CDW, MFC-L9550CDW and DCP-L8450CDW)

Prints the result of wireless LAN connectivity diagnosis.

How to print a report

1. Press .
2. Press `All Settings`.
3. Swipe up or down, or press ▲ or ▼ to display `Print Reports`.
4. Press `Print Reports`.
5. Swipe up or down, or press ▲ or ▼ to display the report you want.
6. Press the report name.
7. (MFC models only)
   Do one of the following:
   - If you chose `XMIT Verify`, go to step ❽.
   - For other reports, go to step ❾.
8. (MFC models only)
   Do one of the following:
   - To view the Transmission Verification Report, press `View on LCD`.
   - To print the Transmission Verification Report, press `Print Report`.
9. Press `OK`.

7 Making copies

Copy settings

You can change the copy settings for the next copy.

These settings are temporary. The machine returns to its default settings one minute after copying.

Press Copy and then press Options. Swipe up or down, or press ▲ or ▼ to scroll through the copy settings. When the setting you want is displayed, press it and choose your preferred option.

When you have finished changing settings, press Colour Start or Mono Start.

Stop copying

To stop copying, press ✕.

Improving copy quality

You can choose from a range of quality settings. The factory setting is Auto.

- Auto

  Auto is the recommended mode for ordinary printouts. Appropriate for documents that contain both text and photographs.

- Text

  Appropriate for documents containing mainly text.

- Photo

  Better copy quality for photographs.

- Receipt

  Appropriate for copying receipts.

1. Load your document.
2. Press (Copy).
3. Enter the number of copies.
4. Press Options.
5. Swipe up or down, or press ▲ or ▼ to display Quality.
6. Press Quality.
7. Press Auto, Text, Photo or Receipt.
8. If you do not want to change additional settings, press OK.
9. Press Colour Start or Mono Start.

Enlarging or reducing copies

To enlarge or reduce the next copy follow these steps:

1. Load your document.
2. Press (Copy).
3. Enter the number of copies you want.
4. Press Options.
5. Swipe up or down, or press ▲ or ▼ to display Enlarge/Reduce.
6. Press Enlarge/Reduce.
7. Press 100%, Enlarge, Reduce or Custom(25-400%).
8. Do one of the following:
   - If you chose Enlarge, press the enlargement or ratio you want.
   - If you chose Reduce, swipe up or down, or press ▲ or ▼ to display the reduction ratio you want and press it.
   - If you chose Custom(25-400%), press ⌫ to erase the displayed percentage, or press ◀ to move the cursor, and then enter an enlargement or reduction ratio from 25% to 400% in 1% increments.

     Press OK.
   - If you chose 100%, go to step ❾.

100%*
200%
141% A5⇒A4
104% EXE⇒LTR
97% LTR⇒A4
94% A4⇒LTR
91% Full Page
85% LTR⇒EXE
83% LGL⇒A4
78% LGL⇒LTR
70% A4⇒A5
50%
Custom(25-400%) [1]

* The factory setting is shown in Bold with an asterisk.

[1] Custom(25-400%) allows you to enter a ratio from 25% to 400% in 1% increments.

9. If you do not want to change additional settings, press OK.
10. Press Colour Start or Mono Start.

NOTE

Page Layout is *not* available with Enlarge/Reduce.

2-sided Copying

You must choose a 2-sided copy layout from the following options before you can start 2-sided copying. The layout of your document determines which 2-sided copy layout you should choose.

(MFC-L8600CDW and DCP-L8400CDN)

Portrait

■ **1–sided→2–sided Long Edge Flip**

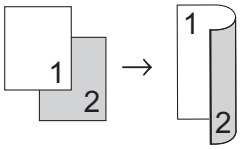

■ **1–sided→2–sided Short Edge Flip**

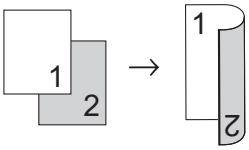

Landscape

■ **1–sided→2–sided Long Edge Flip**

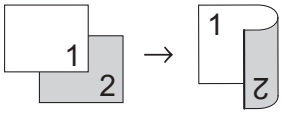

■ **1–sided→2–sided Short Edge Flip**

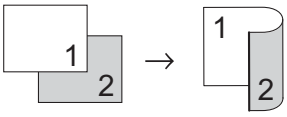

(MFC-L8650CDW, MFC-L8850CDW, MFC-L9550CDW and DCP-L8450CDW)

If you want to use the automatic 2-sided copy feature, load your document in the ADF.

Portrait

■ **2–sided→2–sided**

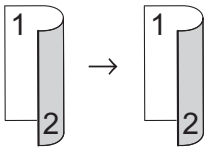

■ **1–sided→2–sided Long Edge Flip**

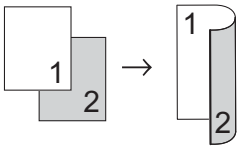

■ **2–sided→1–sided Long Edge Flip**

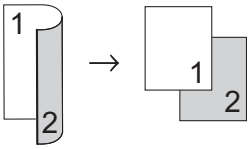

■ **1–sided→2–sided Short Edge Flip**

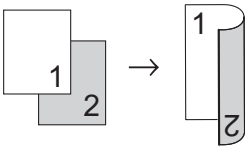

■ **2–sided→1–sided Short Edge Flip**

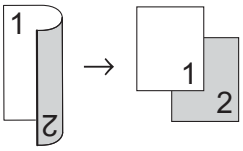

Landscape

■ **2–sided→2–sided**

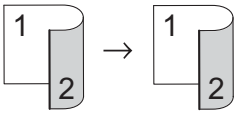

■ **1–sided→2–sided Long Edge Flip**

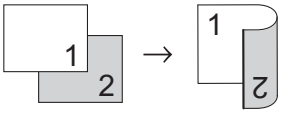

■ **2–sided→1–sided Long Edge Flip**

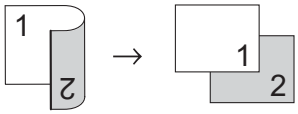

■ **1–sided→2–sided Short Edge Flip**

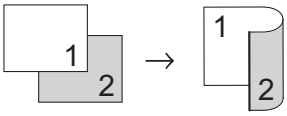

■ **2–sided→1–sided Short Edge Flip**

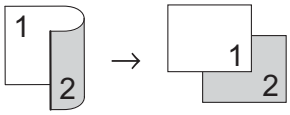

1. Load your document.
2. Press (Copy).
3. Enter the number of copies.
4. Press Options.
5. Swipe up or down, or press ▲ or ▼ to display 2-sided Copy.
6. Press 2-sided Copy.
7. Swipe up or down, or press ▲ or ▼ to display the following layout options:
   Off,
   2-sided⇒2-sided [1],
   1-sided⇒2-sided Long Edge Flip,
   2-sided⇒1-sided Long Edge Flip [1],
   1-sided⇒2-sided Short Edge Flip,
   2-sided⇒1-sided Short Edge Flip [1]

   [1] MFC-L8650CDW, MFC-L8850CDW, MFC-L9550CDW and DCP-L8450CDW
8. Press the option you want.
9. If you do not want to change additional settings, press OK.
10. Press Colour Start or Mono Start to scan the page.
    If you placed the document in the ADF, the machine scans the pages and starts printing.

    If you are using the scanner glass, go to step ⓫.
11. After the machine scans the page, press Scan to scan the next page.
12. Place the next page on the scanner glass.
13. Press OK.
    Repeat steps ⓫ to ⓭ for each page of the layout.
14. After scanning all the pages, press Complete in step ⓫ to finish.

Tray selection

You can change the Tray Use option for the next copy.

1. Load your document.
2. Press (Copy).
3. Enter the number of copies.
4. Press Options.
5. Swipe up or down, or press ▲ or ▼ to display Tray Use.
6. Press Tray Use.
7. Press Tray#1 Only, Tray#2 Only [1], MP Only, MP>T1>T2 [1], MP>T2>T1 [1], T1>T2>MP [1] or T2>T1>MP [1].

   [1] T2 and Tray#2 Only appears if Tray 2 is installed.
8. If you do not want to change additional settings, press OK.
9. Press Colour Start or Mono Start.

NOTE

To change the default setting for Tray Use, see Basic User's Guide.

Adjusting Density and Contrast

Density

Adjust the copy density to make copies darker or lighter.

1. Load your document.
2. Press (Copy).
3. Enter the number of copies.
4. Press Options.
5. Swipe up or down, or press ▲ or ▼ to display Density.
6. Press Density.
7. Press a level of density, from Light to Dark.
8. If you do not want to change additional settings, press OK.
9. Press Colour Start or Mono Start.

Contrast

Adjust the contrast to help an image look sharper and more vivid.

1. Load your document.
2. Press (Copy).
3. Enter the number of copies.
4. Press Options.
5. Swipe up or down, or press ▲ or ▼ to display Contrast.
6. Press Contrast.
7. Press a level of contrast.
8. If you do not want to change additional settings, press OK.
9. Press Colour Start or Mono Start.

Sorting copies

You can sort multiple copies. Pages will be sorted in the order 1 2 3, 1 2 3, 1 2 3, and so on.

1. Load your document.
2. Press (Copy).
3. Enter the number of copies.
4. Press Options.
5. Swipe up or down, or press ▲ or ▼ to display Stack/Sort.
6. Press Stack/Sort.
7. Press Sort.
8. Read and confirm the displayed list of settings you have chosen. If you do not want to change any other settings, press OK.
9. Press Colour Start or Mono Start to scan the page.
   If you placed the document in the ADF, the machine scans the pages and starts printing.

   If you are using the scanner glass, go to step ⑩.
10. After the machine scans the page, press Yes to scan the next page.
11. Place the next page on the scanner glass.
12. Press OK.
    Repeat steps ⑩ to ⑫ for each page of the layout.
13. After scanning all the pages, press No in step ⑩ to finish.

Making N in 1 copies (page layout)

You can reduce the amount of paper used when copying by using the N in 1 copy feature. This allows you to copy two or four pages onto one page. If you want to copy both sides of an ID card onto one page, see *2 in 1 ID Copy* on page 52.

IMPORTANT

- Make sure the paper size is set to A4, Letter, Legal, Folio , A5 [1] or B5 [1].

  [1] For 2 in 1 ID Copy

- You cannot use the Enlarge/Reduce setting with the N in 1 feature.
- (P) means Portrait and (L) means Landscape.

1. Load your document.
2. Press (Copy).
3. Enter the number of copies.
4. Press Options.
5. Swipe up or down, or press ▲ or ▼ to display Page Layout.
6. Press Page Layout.
7. Swipe up or down, or press ▲ or ▼ to display Off(1in1), 2in1(P), 2in1(L), 2in1(ID) [1], 4in1(P) or 4in1(L).

   [1] For information about 2in1(ID), see *2 in 1 ID Copy* on page 52.

8. Press the option you want.
9. If you do not want to change additional settings, press OK.
10. Press Colour Start or Mono Start to scan the page.
    If you placed the document in the ADF, the machine scans the pages and starts printing.

    If you are using the scanner glass, go to step ⓫.

11. After the machine scans the page, press Yes to scan the next page.
12. Place the next page on the scanner glass.
13. Press OK.
    Repeat steps ⓫ to ⓭ for each page of the layout.
14. After scanning all the pages, press No in step ⓫ to finish.

If you are copying from the ADF:

Place your document *face up* in the direction shown in the illustration:

■ 2in1(P)

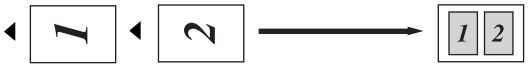

■ 2in1(L)

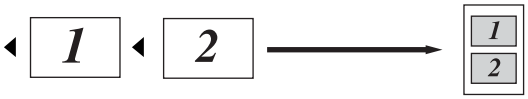

■ 4in1(P)

■ 4in1(L)

If you are copying from the scanner glass:

Place your document *face down* in the direction shown in the illustration:

■ 2in1(P)

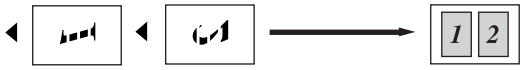

■ 2in1(L)

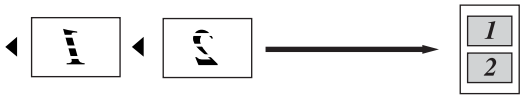

■ 4in1(P)

■ 4in1(L)

2 in 1 ID Copy

You can copy both sides of your identification card onto one page, keeping the original card size.

NOTE

You can copy an identification card to the extent permitted under applicable laws (see Product Safety Guide).

1. Place your identification card *face down* near the left corner of the scanner glass.

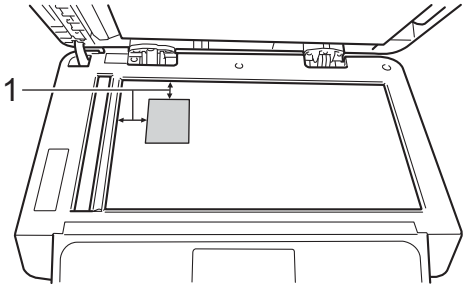

1 4 mm or greater (top, left)

- Even if a document is placed on the ADF, the machine scans from the scanner glass when in this mode.

2. Press (`Copy`).
3. Enter the number of copies.
4. Press `Options`.
5. Swipe up or down, or press ▲ or ▼ to display `Page Layout`.
6. Press `Page Layout`.
7. Swipe up or down, or press ▲ or ▼ to display `2in1(ID)`.
8. Press `2in1(ID)`.
9. Read and confirm the displayed list of settings you have chosen, and then press `OK`.
10. Press `Colour Start` or `Mono Start`. The machine starts scanning one side of the identification card.
11. After the machine has scanned one side, press `Yes`. Turn over the identification card and place it near the left corner of the scanner glass, then press `OK` to scan the other side.

NOTE

When 2 in 1 ID Copy is chosen, the machine sets the quality to `Auto`, the density to `+1` and the contrast to `0`.

Adjusting the Colour Saturation

You can change the default setting for colour saturation.

1. Load your document.
2. Press (Copy).
3. Enter the number of copies.
4. Press Options.
5. Swipe up or down, or press ▲ or ▼ to display Colour Adjust.
6. Press Colour Adjust.
7. Press Red, Green or Blue.
8. Press a level of colour saturation.
9. Repeat steps ❼ and ❽ if you want to adjust the next colour.
   After adjusting the colour settings, press .
10. If you do not want to change additional settings, press OK.
11. Press Colour Start.

Making 2-sided N in 1 copies (MFC-L8650CDW, MFC-L8850CDW, MFC-L9550CDW and DCP-L8450CDW)

When you make 2-sided N in 1 copies from a 2-sided document, you must choose a layout option in 2-sided Copy Page Layout. You will be able to access 2-sided Copy Page Layout after selecting 2-sided⇒2-sided for 2-sided Copy and any N in 1 layout for Page Layout.

You must select an appropriate option in the table.

Bound Edge of the Document	Edge of the copies to be bound	Option you must choose
Long Edge	Long Edge	LongEdge⇒LongEdge
	Short Edge	LongEdge⇒ShortEdge
Short Edge	Long Edge	ShortEdge⇒LongEdge
	Short Edge	ShortEdge⇒ShortEdge

IMPORTANT

- Load your document in the ADF to use the 2-sided Copy Page Layout feature.
- The 2-sided Copy Page Layout feature does not work when you choose 2in1(ID) for Page Layout.

1. Load your document in the ADF.
2. Press (Copy).
3. Enter the number of copies.
4. Press Options.

5. Select `2-sided⇒2-sided` in `2-sided Copy` (see *2-sided Copying* on page 46).
6. Select `2in1(P)`, `2in1(L)`, `4in1(P)` or `4in1(L)` in `Page Layout` (see *Making N in 1 copies (page layout)* on page 50).
7. Swipe up or down, or press ▲ or ▼ to display `2-sided Copy Page Layout`.
8. Press `2-sided Copy Page Layout`.
9. Press `LongEdge⇒ LongEdge`, `LongEdge⇒ ShortEdge`, `ShortEdge⇒ LongEdge` or `ShortEdge⇒ ShortEdge`.
10. If you do not want to change additional settings, press `OK`.
11. Press `Colour Start` or `Mono Start`.

Removing Background Colour

`Remove Background Colour` removes the background colour of the document when copying. Using this setting will make the copy clearer to read and may save toner.

NOTE

This setting is for use only when making colour copies.

1. Load your document.
2. Press (`Copy`).
3. Enter the number of copies.
4. Press `Options`.
5. Swipe up or down, or press ▲ or ▼ to display `Remove Background Colour`.
6. Press `Remove Background Colour`.
7. Press `Off`, `Low`, `Medium` or `High`.
8. If you do not want to change additional settings, press `OK`.
9. Press `Colour Start`.

Saving copy options as a Shortcut

You can store the copy options you use most often by saving them as a Shortcut.

1. Press (Copy).
2. Press Options.
3. Swipe up or down, or press ▲ or ▼ to display the following settings:
   Quality
   Enlarge/Reduce
   Density
   Contrast
   Stack/Sort
   Page Layout
   Colour Adjust
   2-sided Copy
   2-sided Copy Page Layout [1]
   Tray Use
   Remove Background Colour
   Then press the setting you want.
4. Swipe up or down, or press ▲ or ▼ to display the available options, and then press your new option.
   Repeat steps ❸ and ❹ for each setting you want to change.
5. When you have finished choosing new options, press Save as Shortcut.
6. Read and confirm the displayed list of options you have chosen for the Shortcut, and then press OK.
7. Press a tab from 1 to 8.
8. Press ➕ where you have not added a Shortcut.
9. Enter a name for the Shortcut using the Touchscreen's keyboard.
   (To help you enter letters, see Basic User's Guide.)
   Press OK.
10. Press OK to save your Shortcut.

[1] MFC-L8650CDW, MFC-L8850CDW, MFC-L9550CDW and DCP-L8450CDW

Saving paper

You can use the Paper Save preset to reduce the amount of paper consumed for copies. Paper Save uses the 4 in 1 layout and 2-sided [1] copy options.

[1] MFC-L8650CDW, MFC-L8850CDW, MFC-L9550CDW and DCP-L8450CDW

1. Load your document.
2. Press (Copy).
3. Swipe left or right to display Paper Save.
4. Press Paper Save.
5. Enter the number of copies.
6. Do one of the following:
   - To change more settings, go to step ❼.
   - When you have finished changing settings, go to step ❿.
7. Press Options.
8. Swipe up or down, or press ▲ or ▼ to display the available settings, and then press the setting you want.
9. Swipe up or down, or press ▲ or ▼ to display the available options, and then press your new option.
   Repeat steps ❽ and ❾ for each setting you want. When you have finished changing settings, press OK.
10. Press Colour Start or Mono Start.

A Routine maintenance

Checking the machine

Printing the Test Print

You can print a Test Print page to check your print quality.

1. Press .
2. Press `Test Print`.
3. The Touchsceen displays `Press [OK]`. Press `OK`.
   The machine will print the Test Print page.
4. Press .

Checking the Page Counters

You can see the machine's Page Counters for copies, printed pages, reports and lists, faxes or a summary total.

1. Press .
2. Press `All Settings`.
3. Swipe up or down, or press ▲ or ▼ to display `Machine Info.`.
4. Press `Machine Info.`.
5. Press `Page Counter`.
   The Touchscreen displays the number of pages for `Total`, `Fax/List`, `Copy` and `Print`.
6. Press .

Checking the remaining life of toner cartridges

You can see the approximate remaining life of each toner cartridge.

1. Press .
2. Press `Toner Life`.
   The Touchscreen displays the approximate remaining life of the toner cartridges in a bar chart.
3. Press .

Checking the remaining life of parts

You can see the remaining life of the machine's parts on the Touchscreen.

1. Press .
2. Press `All Settings`.
3. Swipe up or down, or press ▲ or ▼ to display `Machine Info.`.
4. Press `Machine Info.`.
5. Press `Parts Life`.
6. Press ▲ or ▼ to see the approximate remaining parts life of the `Drum`, `Belt Unit`, `Fuser`, `Laser Unit`, `PF Kit MP`, `PF Kit 1` and `PF Kit 2` [1].

   [1] When Tray 2 is installed.
7. Press .

NOTE

The remaining life of the toner cartridge is listed on the User Settings report (see *How to print a report* on page 43).

Replacing periodic maintenance parts

The periodic maintenance parts must be replaced regularly to maintain the print quality. The parts listed in the table must be replaced after printing approximately 50,000 pages [1] for PF Kit MP and 100,000 pages [1] for PF Kit 1, PF Kit 2 [2], Fuser and Laser. Contact Brother customer service when these messages appear on the Touchscreen.

Touchscreen message	Description
`Replace Fuser`	Replace the fuser unit.
`Replace Laser`	Replace the laser unit.
`Replace PF Kit1`	Replace the paper feeding kit for the paper tray.
`Replace PF Kit2` [2]	Replace the paper feeding kit for the lower tray (option).
`Replace PF Kit MP`	Replace the paper feeding kit for the multi-purpose tray.

[1] A4 or Letter size single-sided pages.

[2] When Tray 2 is installed.

Packing and shipping the machine

WARNING

This machine is heavy and weighs more than 29.0 kg. To prevent possible injuries, at least two people should lift the machine. One person should hold the front of the machine, and one person should hold the back, as shown in the illustration. Be careful not to trap your fingers when you put the machine down.

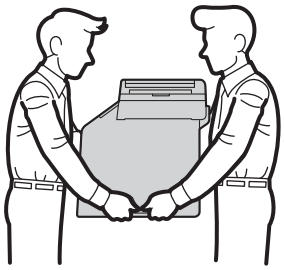

If you use a Lower Tray, DO NOT carry the machine with the Lower Tray as you may be injured or cause damage to the machine because it is not attached to the Lower Tray.

NOTE

If for any reason you must ship your machine, carefully repack the machine in the original packaging to avoid any damage during transit. The machine should be adequately insured with the carrier.

1. Press and hold down ⏻ to turn off the machine. Leave the machine turned off for at least 10 minutes to cool down.
2. Disconnect all the cables, and then unplug the power cord from the electrical socket.
3. Place the packing material (1) into the carton.

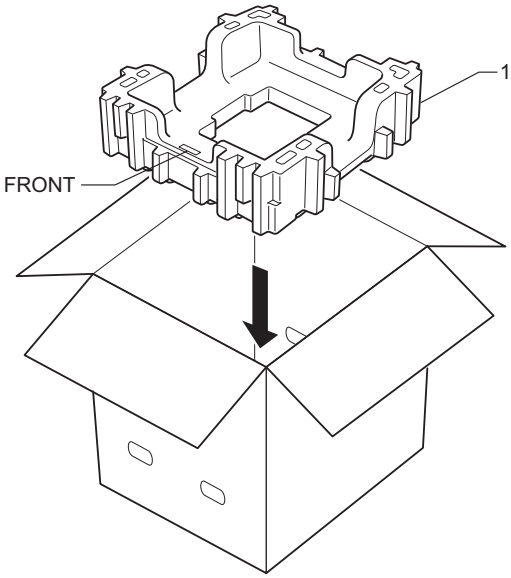

4 Wrap the machine in a plastic bag, then place it on the bottom packing material (1).

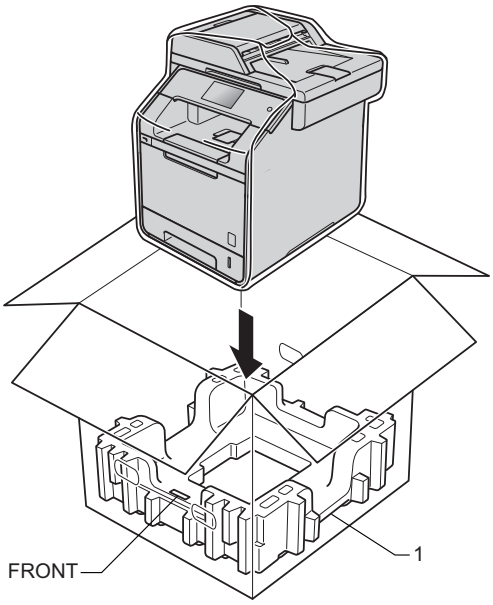

5 Place the packing material (2) marked “RIGHT” on the right of the machine. Place the packing material (3) marked “LEFT” on the left of the machine. Place the AC power cord and printed materials in the original carton as shown in the illustration.

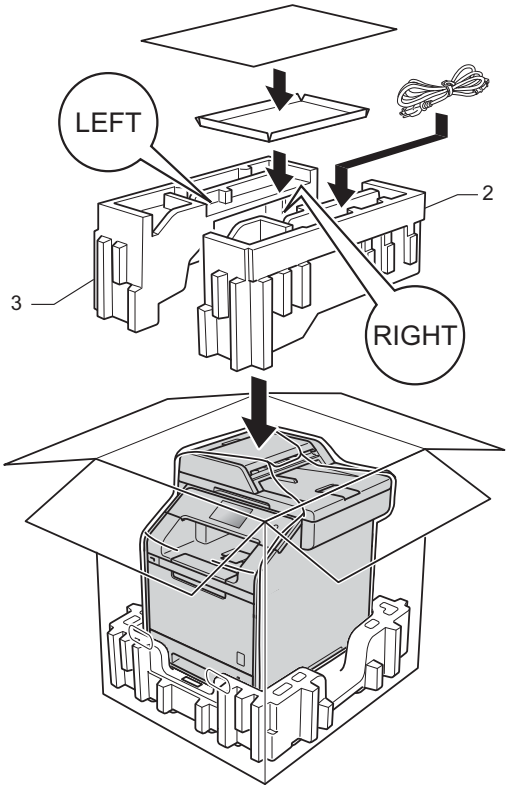

6 Close the carton and tape it shut.

A

7 <If you have a Lower Tray>
Repack the lower tray as shown in the illustration.

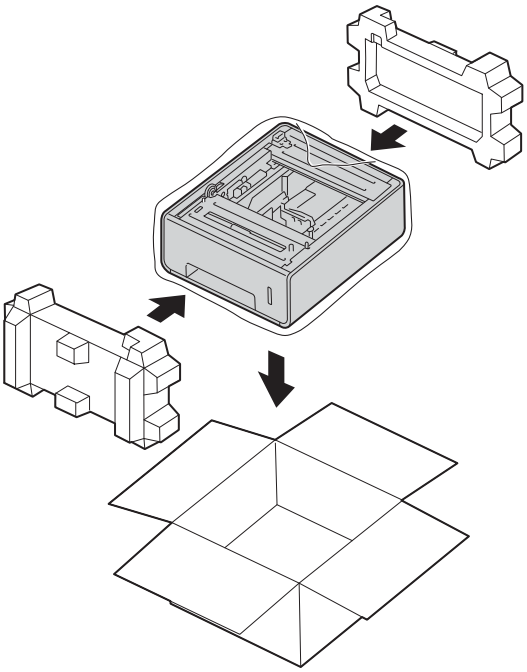

B Options

Options

This machine has the following optional accessories. You can increase the capabilities of the machine with these items.

Lower tray unit

(For DCP-L8400CDN, DCP-L8450CDW, MFC-L8600CDW, MFC-L8650CDW and MFC-L8850CDW)

LT-320CL

(For MFC-L9550CDW)

LT-325CL

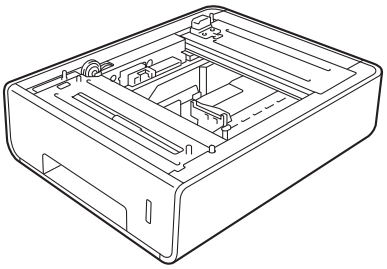

SO-DIMM memory

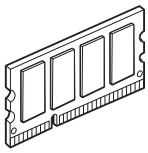

Optional paper tray (For DCP-L8400CDN, DCP-L8450CDW, MFC-L8600CDW, MFC-L8650CDW and MFC-L8850CDW (LT-320CL)) (For MFC-L9550CDW (LT-325CL))

An optional lower tray can be installed on the MFC-L8600CDW, MFC-L8650CDW, MFC-L8850CDW, MFC-L9550CDW, DCP-L8400CDN and DCP-L8450CDW, and it can hold up to 500 sheets of 80 gsm paper.

When an optional tray is installed, the machine can hold up to 800 sheets of plain paper.

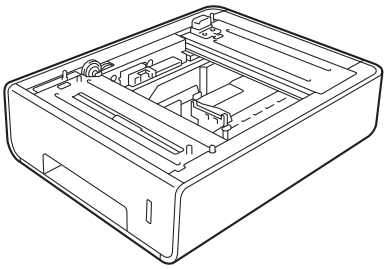

For setup, see the instructions that we have supplied with the lower tray unit.

WARNING

If you use a Lower Tray, DO NOT carry the machine with the Lower Tray. You may injure yourself or cause damage to the machine because the Lower Tray is not securely attached to the machine.

Memory board

Your machine has 256 MB of standard memory and one slot for optional memory expansion. You can increase the memory up to maximum of 512 MB by installing one SO-DIMM (Small Outline Dual In-line Memory Module).

SO-DIMM Types

You can install the following SO-DIMMs:

- 256 MB Kingston KTH-LJ2015/256
- 256 MB Transcend TS256MHP423A

NOTE

- For more information, visit the Kingston Technology's website at http://www.kingston.com/.
- For more information, visit the Transcend website at http://www.transcend.com.tw/.

In general, the SO-DIMM must have the following specifications:

Type	144-pin and 16-bit output
CAS latency	4
Clock frequency	267 MHz (533 Mb/S/Pin) or more
Capacity	256 MB
Height	30.0 mm
DRAM type	DDR2 SDRAM

NOTE

- There might be some SO-DIMMs that will not work with the machine.
- For more information, call the dealer you bought the machine from or Brother customer service.

Installing extra memory

1. Turn off the machine's power switch. Unplug the telephone line cord.

2. Disconnect the interface cable from the machine, and then unplug the power cord from the AC power outlet.

NOTE

Be sure to turn off the machine's power switch before you install or remove the SO-DIMM.

3. Remove the plastic (1) and then metal (2) SO-DIMM covers.

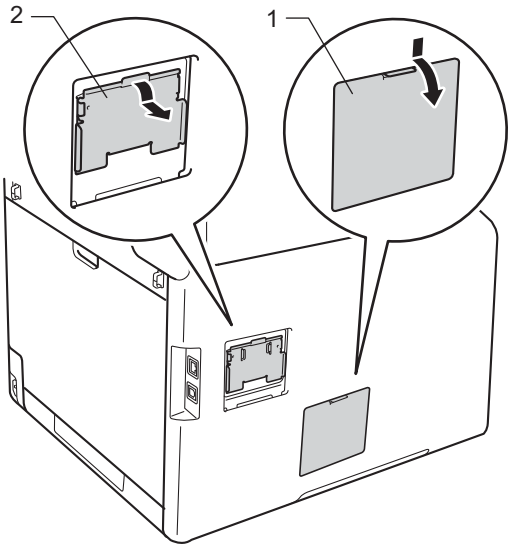

4. Unpack the SO-DIMM and hold it by its edges.

IMPORTANT

To prevent damage to the machine from static electricity, DO NOT touch the memory chips or the board surface.

5. Hold the SO-DIMM by the edges and align the notches in the SO-DIMM with the protrusions in the slot. Insert the SO-DIMM diagonally (1), then tilt it toward the interface board until it locks into place (2).

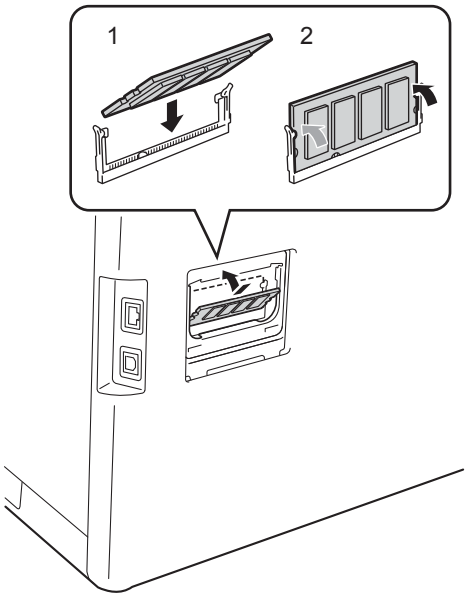

6. Put the metal (2) and then the plastic (1) SO-DIMM covers back on.

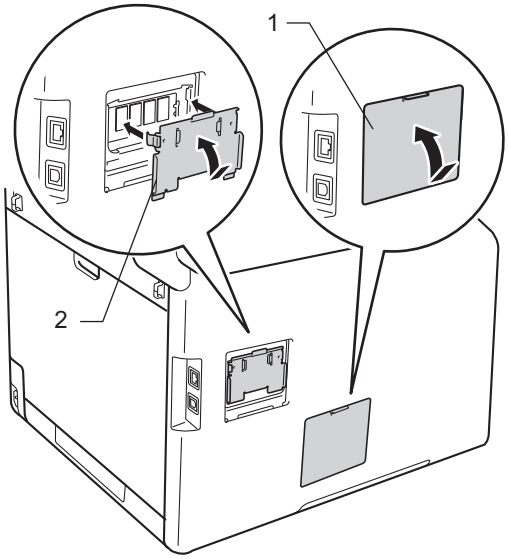

B

7 Plug the machine's power cord back into the AC power outlet first, and then connect the interface cable.

8 Plug in the telephone line cord. Turn on the machine's power switch.

NOTE

To make sure that you have installed the SO-DIMM correctly, you can print the User Settings List that shows the current RAM SIZE, (see *How to print a report* on page 43.)

C Glossary

This is a comprehensive list of features and terms that appear in Brother manuals. Availability of these features depends on the model you purchased.

Address Book

Names and numbers you have stored for easy dialling.

Address Book List

A listing of names and numbers stored in the Address Book memory, in alphabetical order.

ADF (automatic document feeder)

The document can be placed in the ADF and scanned one page at a time automatically.

Auto Reduction

Reduces the size of incoming faxes.

Automatic fax transmission

Sending a fax without picking up the handset of the external telephone or pressing `Hook`.

Automatic Redial

A feature that enables your machine to redial the last fax number after five minutes if the fax did not go through because the line was busy.

Backup Print

Your machine prints a copy of every fax that is received and stored in memory. This is a safety feature so you will not lose messages during a power failure.

Batch Transmission

As a cost saving feature, all delayed faxes to the same fax number will be sent as one transmission.

Beeper Volume

Volume setting for the sound when you press a key or make an error.

Broadcasting

The ability to send the same fax message to more than one location.

Cancel Job

Cancels a programmed print job and clears it from the machine's memory.

CNG tones

The special tones (beeps) sent by fax machines during automatic transmission to tell the receiving machine that a fax machine is calling.

Caller ID

A service purchased from the telephone company that lets you see the number (or name) of the party calling you.

Coding method

Method of coding the information contained in the document. All fax machines must use a minimum standard of Modified Huffman (MH). Your machine is capable of greater compression methods, Modified Read (MR), Modified Modified Read (MMR) and JBIG, if the receiving machine has the same capability.

Communication error (or Comm. Error)

An error during fax sending or receiving, usually caused by line noise or static.

Compatibility group

The ability of one fax unit to communicate with another. Compatibility is assured between ITU-T Groups.

Contrast

Setting to compensate for dark or light documents, by making faxes or copies of dark documents lighter and light documents darker.

Delayed Fax

Sends your fax at a specified later time that day.

Density

Changing the Density makes the whole image lighter or darker.

Distinctive Ring

A subscriber service purchased from the telephone company that gives you another telephone number on an existing telephone line. The Brother machine uses the new number to simulate a dedicated fax line.

Dual Access

Your machine can scan outgoing faxes or scheduled jobs into the memory at the same time it is sending a fax, receiving a fax, or printing an incoming fax.

ECM (Error Correction Mode)

Detects errors during fax transmission and resends the pages of the fax that had an error.

Extension telephone

A telephone on the fax number that is plugged into a separate wall socket.

External phone

A TAD (telephone answering device) or telephone that is connected to your machine.

F/T Ring Time

The length of time that the Brother machine fast double-rings (when the Receive Mode setting is Fax/Tel) to notify you to pick up a voice call that it answered.

Fax Ability (New Zealand only)

A subscriber service purchased from the telephone company that provides another telephone number on an existing telephone line. The brother fax machine uses the new number to simulate a detected fax line.

Fax Detect

Enables your machine to respond to CNG tones if you interrupt a fax call by answering it.

Fax Forwarding

Sends a fax received into the memory to another pre-programmed fax number.

Fax Journal

Lists information about the last 200 incoming and outgoing faxes. TX means Transmit. RX means Receive.

Fax Storage

You can store faxes in the memory.

Fax tones

The signals sent by sending and receiving fax machines while communicating information.

Fax/Tel

You can receive faxes and telephone calls. Do not use this mode if you are using a telephone answering device (TAD).

Fine resolution

Resolution is 203 × 196 dpi. It is used for small print and graphs.

Greyscale

The shades of grey available for copying and faxing photographs.

Group number

A combination of Address Book numbers that are stored in Address Book for Broadcasting.

Journal Period

The pre-programmed time period between automatically printed Fax Journal Reports. You can print the Fax Journal on demand without interrupting the cycle.

Manual fax

When you press `Hook` to hear the receiving fax machine answer before you press `Fax Start` to begin transmission.

OCR (optical character recognition)

Nuance™ PaperPort™ 12 SE or Presto! PageManager software application converts an image of text to text you can edit.

Out of Paper Reception

Receives faxes into the machine's memory when the machine is out of paper.

Overseas Mode

Makes temporary changes to the fax tones to accommodate noise and static on overseas telephone lines.

Pause

Allows you to place a 3.5 second delay in the dialling sequence while you are dialling using the dial pad or while you are storing numbers in Address Book. Press `Pause` as many times as needed for longer pauses.

Pulse

A form of rotary dialling on a telephone line.

Real Time Transmission

When memory is full, you can send faxes in real time.

Remaining Jobs

You can check which programmed fax jobs are waiting in the memory and cancel the jobs individually.

Remote Access Code

Your own four-digit code (– – –✱) that allows you to call and access your machine from a remote location.

Remote Activation code (Fax/Tel mode only)

Press this code (✱**51**) when you answer a fax call on an extension or external telephone. (✱**91** for New Zealand)

Remote Deactivation code (Fax/Tel mode only)

When the machine answers a voice call, it fast double-rings. You can pick up at an extension or external telephone by pressing this code (**#51**). (**#91** for New Zealand)

Remote Retrieval Access

The ability to access your machine remotely from a touch tone telephone.

Resolution

The number of vertical and horizontal lines per inch.

Ring Delay

The number of rings before the machine answers in `Fax` and `Fax/Tel` modes.

Ring Volume

Volume setting for the machine's ring.

Scanning

The process of sending an electronic image of a paper document into your computer.

Search

An alphabetical electronic listing of stored Address Book and Group numbers.

Settings Tables

At-a-glance instructions that show all the settings and options that are available for setting up your machine.

Station ID

The stored information that appears on the top of faxed pages. It includes the sender's name and fax number.

TAD (telephone answering device)

You can connect an external TAD to your machine.

Temporary settings

You can choose certain options for each fax transmission and copy without changing the default settings.

Tone

A form of dialling on the telephone line used for Touch Tone telephones.

Touchscreen LCD and Touchpanel

The Touchscreen LCD (Liquid Crystal Display) on the machine displays interactive messages and prompts for using the machine. You can operate the Touchscreen by pressing or swiping on the screen. The Touchpanel, on the right side of the Touchscreen LCD, illuminates its LEDs when they are available for the current operation.

Transmission

The process of sending faxes over the telephone lines from your machine to the receiving fax machine.

User Settings List

A printed report that shows the current settings of the machine.

Xmit Report (Transmission Verification Report)

A listing for each transmission, that shows its date, time and number.

D Index

Numerics

2-sided copy 46

A

Address Book
broadcasting 21
using Groups 21
Group dial
setting up Groups for broadcasting 39
Apple Macintosh
See Software and Network User's Guide.
Auto Power Off 4

B

Broadcasting 21
cancelling 22
setting up Groups for 39

C

Cancelling
broadcast in process 22
fax jobs in memory 25
fax storage 31
jobs awaiting redial 25
memory receive options 32
ControlCenter2 (for Macintosh)
See Software and Network User's Guide.
ControlCenter4 (for Windows®)
See Software and Network User's Guide.
Copy
2 in 1 ID Copy 52
2-sided 46
button 44
contrast 49
density 48
Enlarge/Reduce 45
N in 1 (page layout) 50
quality 44
saving paper 55
sort 49
temporary settings 44
using scanner glass 47, 49, 50
Cover page 27
custom comments 27
printed form 28

D

Daylight Saving Time 2
Deep Sleep mode 4
Delayed batch transmission 24
Destination Display 29
Dialing
dial prefix 6
Dialling
Groups (broadcasting) 21
restricting dialling 15
Drum unit
checking (remaining life) 56
Dual access 20

E

Enlarge/Reduce 45

F

Fax codes
changing 33
remote access code 33
Fax forwarding
changing remotely 34, 35
programming a number 30
Fax storage 31
printing from memory 37
turning off 32
turning on 31
Fax, stand-alone
receiving
fax forwarding 30, 34
fax receive stamp 37
into memory (fax storage) 31
reducing to fit on paper 36
retrieving from a remote site 34, 35
sending 17
broadcasting 21
cancelling from memory 25
contrast 19
delayed batch 24
delayed fax 24
destination display 29
from memory (dual access) 20
manual 20
overseas 23
real time transmission 23
resolution 19

G

Groups for broadcasting 39

M

Machine information
checking remaining life of parts 56
page counts 56
Macintosh
See Software and Network User's Guide.
Maintenance, routine 56
checking the remaining life of parts 56
Manual
transmission 20
Memory
adding DIMM (option) 62
installing 63
storage 1

N

N in 1 (page layout) 50
Network
faxing
See Software and Network User's Guide.
printing
See Software and Network User's Guide.
scanning
See Software and Network User's Guide.
Nuance™ PaperPort™ 12SE
See Software and Network User's Guide.
and Help in the PaperPort™ 12SE
application to access How-to-Guides.

O

Outgoing Calls
Add to Address Book 39

P

Page layout (N in 1) 50
PC-Fax
  See Software and Network User's Guide.
Power failure 1
Presto! PageManager
  See Software and Network User's Guide.
  See also Help in the Presto! PageManager application.
Print
  fax from memory 37
  reports 43
Printing
  See Software and Network User's Guide.

Q

Quality
  copying 44
Quiet mode 4

R

Reducing
  copies 45
  incoming faxes 36
Remote retrieval 33
  access code 33
  commands 34
  getting your faxes 35
Remote setup
  See Software and Network User's Guide.
Reports 42, 43
  Address Book 43
  Drum Dot Print 43
  Fax Journal 42, 43
    journal period 42
  how to print 43
  Network Configuration 43
  Printer Setttings 43
  Transmission Verification 42
  User Settings 43
  WLAN Report 43
Resolution
  fax (standard, fine, superfine, photo) 19
  setting for next fax 19

S

Scanning
  See Software and Network User's Guide.
Security
  restricting dialling 15
  Setting lock 13
Sleep mode 3
Sort 49

T

Temporary copy settings 44
Toner Save 3
Touchscreen
  backlight brightness 5

W

Windows®
  See Software and Network User's Guide.
Wireless Network
  See Quick Setup Guide and Software and Network User's Guide.

D

brother

Visit us on the World Wide Web
http://www.brother.com/

These machines are approved for use in the country of purchase only. Local Brother companies or their dealers will only support machines purchased in their own countries.

Brother Earth

www.brotherearth.com