Stampcreator PRO™

HIGH QUALITY STAMP SYSTEM

SC-2000USB

Quick Reference

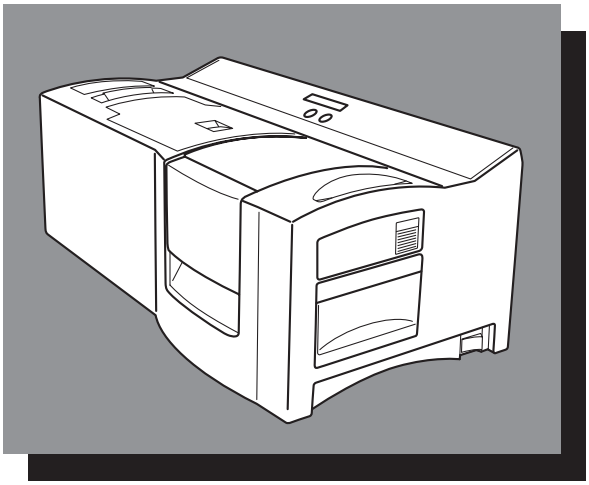

*Be sure to read and understand this guide before using the machine. We recommend that you keep this guide nearby for future reference.

brother®

LBA911001

Thank you for purchasing the SC-2000USB!

With your new Brother stamp printer, you can print personalised stamps for any purpose. Simply insert a stamp cassette into the SC-2000USB, design your stamp with the enclosed P-touch Editor software or Stampcreator Express software, and then print it out. Your customised stamp prints out in seconds. Stamps are available in various sizes.

The many features of the P-touch Editor software and Stampcreator Express software make creating great stamps quick and easy. Not only does the software automate the more complicated layout functions, but it also includes a variety of pre-formatted templates for immediate use.

For Australia Only:

Warranty & Repair
For details about warranty on your Brother Product, the details are listed on the following link: **http://www.brother.com.au** under Service & Support > Warranty. For warranty service (repair) of your Brother product you will need to retain a copy of your sales docket and contact the Support Centre for location of the nearest Authorised Warranty Centre (AWC).

Support
For technical support for your Brother Product other than what you can resolve through the User's Guide, please visit our website or our solutions website for FAQs/Troubleshooting, Drivers & Software, or contact the Product Support Centre for any technical or customer care/support enquiry.

Product Support Centre: Australia

Brother International (Aust) Pty Ltd

Phone: 02 8875 6000

Fax: 02 9870 7223

E-mail: please visit **www.brother.com.au/ServiceSupport/EmailSupport.aspx** and submit an e-mail enquiry.

Web Site: **www.brother.com.au**

Solutions Site: **http://solutions.brother.com**

Our Technical Support Consultants are available 5 days a week by phone during the hours of 8.30am to 5pm Monday to Friday.

Table of Contents

General Information **2**
Safety Precautions **3**
General Precautions **5**
System Requirements **5**
Unpacking **6**
Changing the LCD display language **8**
Connecting the Interface and Power Supply Cables **9**
Installing the Software **10**
P-touch Editor, Stampcreator Express and printer driver 10
Using the Software **14**
P-touch Editor software 14
Stampcreator Express software 16
Adding new styles to the Stampcreator Express software 19
Using the SC-2000USB **21**
Installing the ink ribbon cassette 21
Loading draft sheets and installing the draft tray 21
Engraving a stamp 22
Printing an ID label for the engraved stamp 24
Assembling the Stamp **25**
Correcting the Engraved Stamp **25**
Refilling the Stamp Ink **26**
Maintenance **27**
Cleaning the draft sheet rollers 27
Cleaning the ID label rollers 27
Cleaning the print head 28
Replacing the xenon lamp unit 28
Troubleshooting **29**
Removing a jammed draft sheet or ID label sheet 31
Error Message List **32**

General Information

Compilation and Publication Notice

Under the supervision of Brother Industries, Ltd., this manual has been compiled and published, covering the latest product's descriptions and specifications.

The contents of this manual and the specifications of this product are subject to change without notice.

Brother reserves the right to make changes without notice in the specifications and materials contained herein and shall not be responsible for any damages (including consequential) caused by reliance on the materials presented, including but not limited to typographical and other errors relating to the publication.

© 2011 Brother Industries, Ltd.

Trademarks

The Brother logo is a registered trademark of Brother Industries, Ltd.
Brother is a registered trademark of Brother Industries, Ltd.
© 2011 Brother Industries, Ltd. All rights reserved.
Microsoft, Windows and Windows Vista are registered trademarks of Microsoft Corporation in the United States and other countries.
The names of other software or products used in this document are trademarks or registered trademarks of the respective companies that developed them.
Each company whose software title is mentioned in this manual has a Software Licence Agreement specific to its proprietary programs.
All other brand and product names mentioned in this manual are registered trademarks of their respective companies.

Safety Precautions

Read all of these instructions and save them for later reference. Follow all warnings and instructions marked on the product.

Warning	Tells you what to do to avoid the risk of injury.
Caution	Tells you about procedures you must follow to prevent damage to the printer.

The symbols used in this manual are as follows:

	Action NOT allowed.		DO NOT disassemble the product.
	DO NOT splash the product with or immerse the product in water.		DO NOT touch a given portion of the product.
	Mandatory action.		Unplugging.
	Alerts to the possibility of electrical Shock.		

■ To use the machine safely

Warning

Follow these guidelines to avoid fire, electric shock, or other damage.

■ The Printer

- Unplug the power cord immediately and stop using the printer during an electrical storm. There may be a remote risk of electric shock from lightning.
- Do not touch any metal parts near the print head. The print head becomes very hot during use and remains very hot immediately after use. Do not touch it directly with your hands.
- Dispose of plastic bags correctly and keep away from babies and children. Do not wear or play with plastic bags.
- Unplug the power cord immediately and stop using the printer if you notice any abnormal odour, heat, discolouration, deformation or anything unusual when the printer is in use or storage.
- Do not disassemble the printer.
  For inspection, adjustment and repair of the printer contact the retail outlet where the printer was purchased or your local authorised service centre.
- Do not drop, hit or otherwise bang the printer.
- Do not allow the printer to get wet in any way.
- Do not use the printer with foreign objects in it. If water or any foreign objects should enter the printer, unplug the power cord from the electrical outlet and remove the foreign object. If necessary, contact the retail outlet where the printer was purchased or your local authorised service centre.
- Never look at the flash which may leak from the stamp compartment.
- DO NOT put your fingers on the edge of the machine under the ink ribbon compartment cover. Doing this may cause injury.

⚠ Warning

Follow these guidelines to avoid fire, electric shock, or other damage.

■ Power Cord

- Use only the authorised power source (220-240 V AC) for the printer.
- Use only the power cord included with the printer.
- Do not handle the power cord or plug if your hands are wet.
- Do not overload the power outlet socket with too many appliances or insert the power cord into a damaged outlet socket.
- Do not cut, damage, alter or place heavy objects on the power cord.
- Do not use the power cord if it is damaged.
- Ensure the power plug is correctly inserted into the power outlet.
- If the printer will not be used for an extended period, remove the power supply cord from the electrical outlet.

⚠ Caution

Follow these guidelines to avoid fire, electric shock, or other damage.

■ The Printer

- The standard electrical outlet should be close to the printer and be easily accessible.

■ Power Cord

- Always hold the power plug when removing the power cord from or inserting it into the outlet. Pulling on the power cord cable could cause problems with the power cord.

■ Installation/Storage

- Place the printer on a flat, stable surface such as a desk.
- Do not place any heavy objects on top of the printer.

General Precautions

- Be sure the machine is always placed on a level, stable surface.
- Lift the machine by grabbing the specified areas.
- Be sure to meet the power requirements specified for this machine.
- Keep the machine and its accessories out of direct sunlight and extremely dusty places.
- Do not expose the machine or any of its accessories to extremely high or extremely low temperatures or high humidity.
- Do not try to disassemble the machine or any of its accessories.
- When connecting and disconnecting the cables, always be sure to grab only the connector.
- Store the draft sheets, the ID label sheets, and the cleaning sheets in their packages. Do not use folded or damaged draft sheets, ID label sheets, or cleaning sheets.
- Never look at the flash which may leak from the stamp compartment.
- Do not touch the machine's internal parts since they become extremely hot after the machine has been used for a long time.
- Do not leave the machine for a long period of time with the ink ribbon compartment cover or stamp compartment cover open or the xenon lamp unit or draft tray uninstalled.
- Do not touch any of the machine's internal sensors.
- Avoid using the machine in extremely dusty places. Keep it out of both direct sunlight and rain.
- Do not expose the machine to extremely high temperature or humidity.
- Do not leave any rubber or vinyl on the machine for an extended period of time. Doing so may cause staining.
- Do not clean the machine with alcohol or other organic solvents. Only use a soft, dry cloth.
- Do not put any foreign objects into or heavy objects on the machine.
- To avoid injures, do not touch the cutter's edge.
- Do not touch the print head, which becomes very hot when SC-2000USB is used. Even after the machine is turned off, the print head remains hot for some time.
- Use only the power supply cord designed exclusively for this machine. Use of any other cord will void the warranty.
- Use only the attached interface cables for this machine. Use of any other cable will void the warranty.
- When the machine is not being used for a long period of time, disconnect the power supply cord.
- Do not try to disassemble the SC-2000USB.

System Requirements

Computer Requirements

Check that your system meets the following requirements.

- OS: Windows® XP / Windows Vista®[*1] / Windows® 7[*1]
- Interface: USB port (USB Spec 1.1 or 2.0 protocol)
  Serial port (9-pin, RS-232C, supports 115,200 bps)
- Hard Drive: Over 70MB of available space[*2]
- Memory: Windows® XP: 128 MB or more
  Windows Vista®: 512 MB or more
  Windows® 7: 1 GB (32-bit) or 2 GB (64-bit) or more
- Monitor: SVGA, high color or higher graphics card
- Others: CD-ROM drive, pointing device

[*1]The PC should meet Microsoft®'s recommendations for the OS installed.
[*2]Required available space when installing the software with all of the options.

Unpacking

SC-2000USB

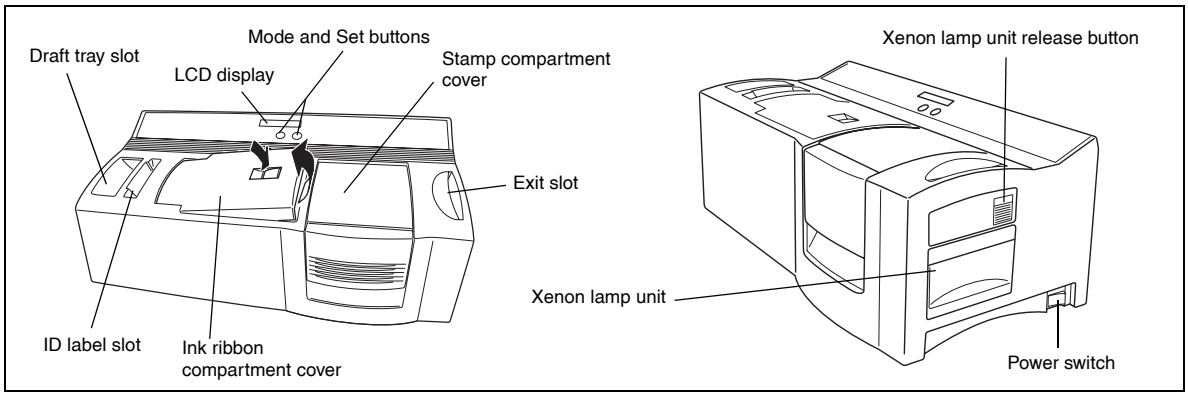

Power supply cord (for connecting the SC-2000USB to the AC outlet)

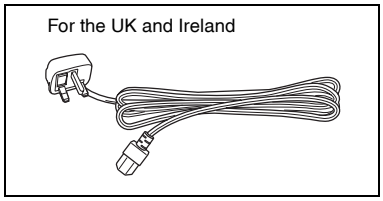

☞ *The illustration is for UK.*
The shape of the plug may vary depending on the country/region.

Interface cables (for connecting the SC-2000USB to the computer)

USB interface cable (for the USB port of a PC running Windows® XP/ Windows Vista®/Windows® 7)

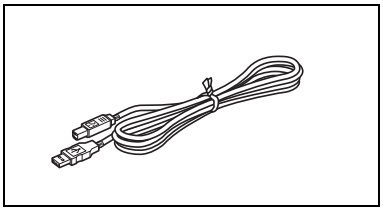

Serial interface cable (for the serial port of a PC running Windows® XP/ Windows Vista®/Windows® 7)

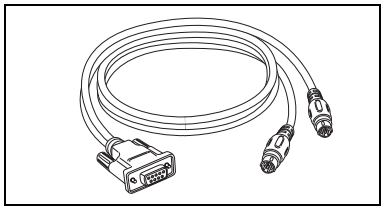

150 draft sheets (for printing the data in order to engrave the stamp)

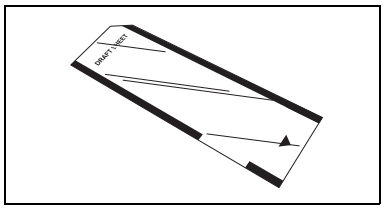

9 cleaning sheets (for cleaning the rollers)

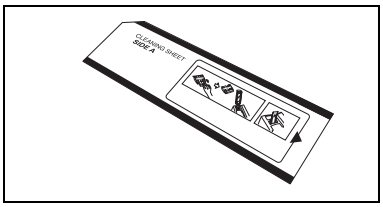

5 ID label sheets (for printing a label that can be attached to each stamp for identification)

size 1438 (× 2)
size 1850 (× 2)
size 2770 (× 1)

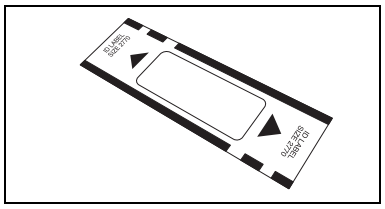

Draft tray (for feeding in the draft sheets)

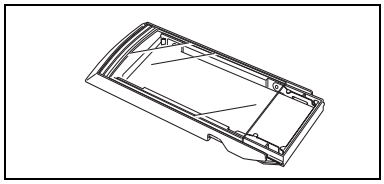

Print head cleaning pen (for cleaning the print head)

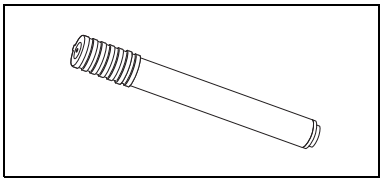

Stamp correction pen (for correcting the engraved stamp)

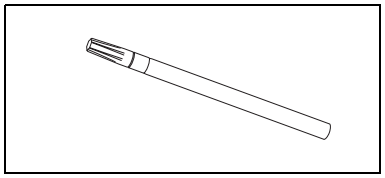

5 stamps with caps

size 1438 (× 2)
size 1850 (× 2)
size 2770 (× 1)

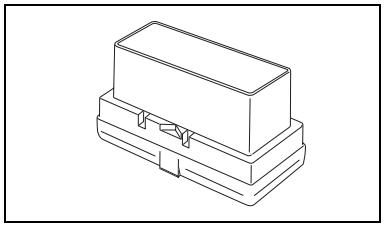

5 stamp skirts

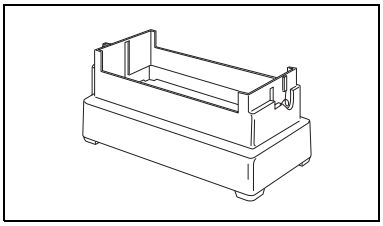

5 grips

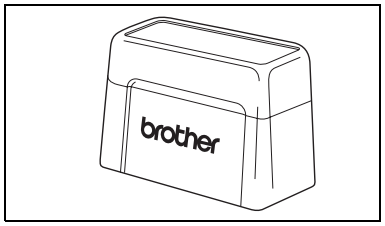

CD-ROM containing the PC software and their manuals

Precautions:

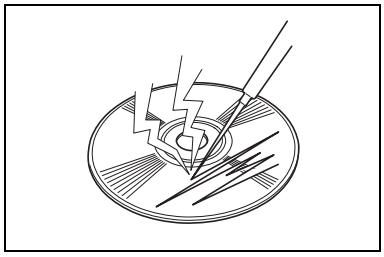

- Be careful that the CD-ROM is not scratched.

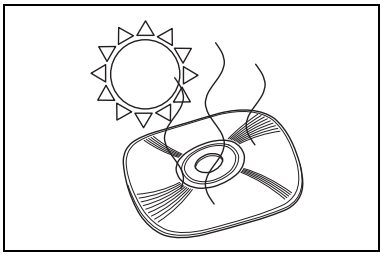

- Do not subject the CD-ROM to extremely high or extremely low temperatures.

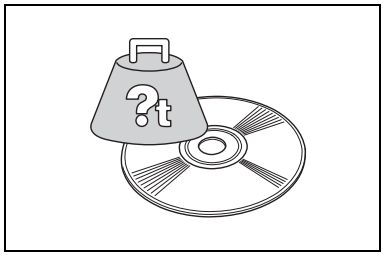

- Do not put heavy objects on the CD-ROM.

Brother Industries, Ltd. and its suppliers possess all rights and copyrights to this software (including, but not limited to, the programming, images, clip art, templates, and text incorporated into the software), the text in the enclosed manuals, and duplicates of the software. This software, either in part or in whole, may not be duplicated, modified, reverse-engineered, disassembled or decompiled without permission.

Changing the LCD display language

❶ While holding down the [Set] button, turn on the SC-2000USB. When "READY" appears in the display, release the [Set] button.

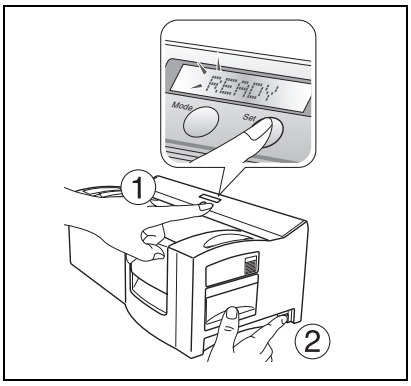

❷ Press the [MODE] button three times until "LANGUAGE" appears.

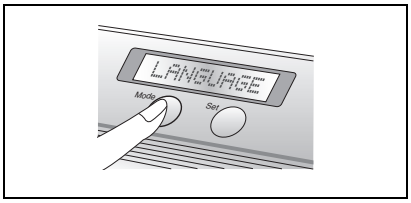

❸ Press the [Set] button once.

❹ Press the [MODE] button until the name of the desired language appears.

ENGLISH
DEUTSCH
FRANCAIS
NEDERLANDS
NORSK
SVENSKA
ITALIANO
PORTUGUÊS
ESPAÑOL

❺ Press the [Set] button to apply the setting.

❻ Turn the SC-2000USB off, then on again.

This completes the setting of the LCD display language.

Connecting the Interface and Power Supply Cables

After connecting the interface and power supply cables to the SC-2000USB, it can be used to create stamps from any layout that you design in the P-touch Editor software or Stampcreator Express software installed on your computer.

❶ Be sure both the SC-2000USB and the computer are turned off.

❷ Attach the appropriate interface cable connector to the computer port specified in the table below.

P–touch Editor software	Operating system	Computer port
Ver. 4.2 for Windows®	Windows® XP / Windows Vista® / Windows® 7	USB port or Serial port (9 pin)

☞ *After connecting the 9-pin connector, be sure to tighten the screws to lock it into place.*

❸ Connect the other end of the interface cable to the interface port on the back of the SC-2000USB.

❹ Insert one end of the power supply cord into the power supply port on the SC-2000USB and the other end of the cord into an AC outlet.

❺ Flip the power switch on the right side of the SC-2000USB to " | ", and then turn on the computer. The message "READY" appears on the LCD display of the SC-2000USB when it is ready to begin engraving stamps.

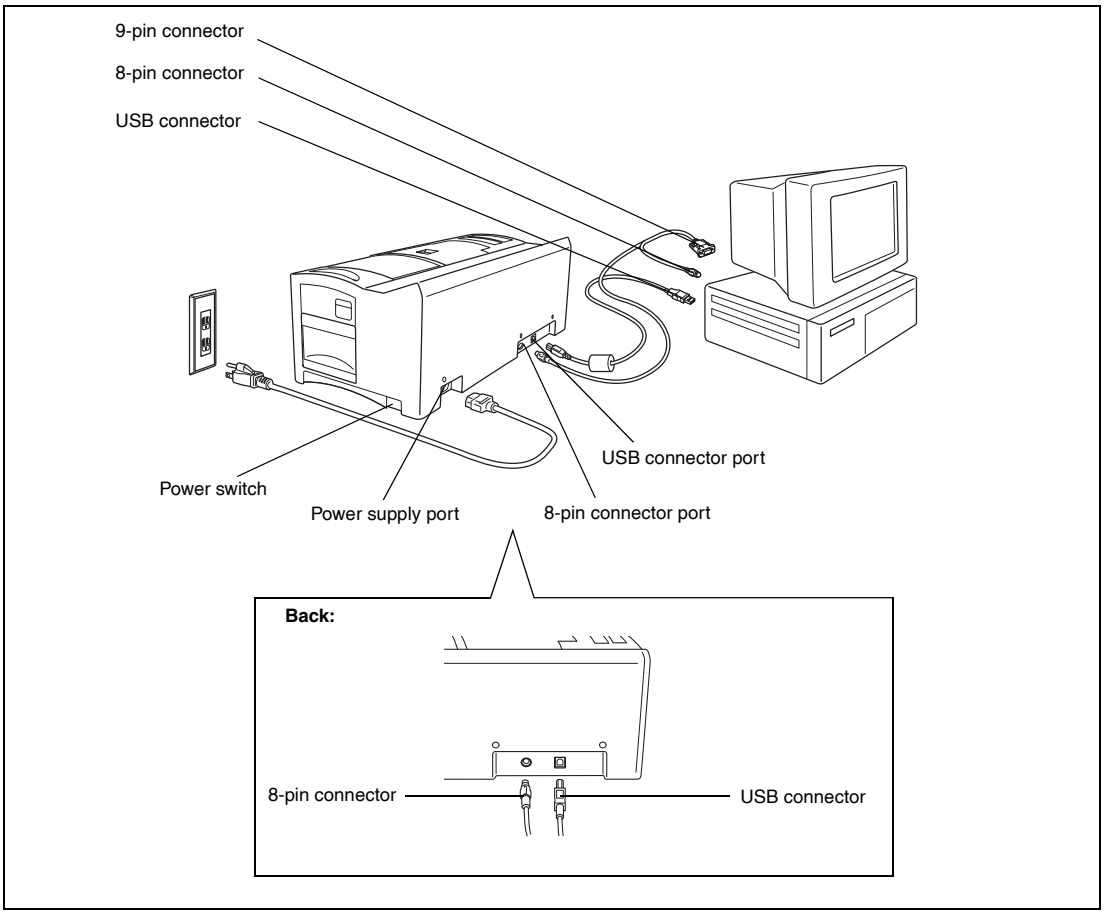

Installing the Software

P–touch Editor, Stampcreator Express and printer driver

Before stamps can be engraved on the SC-2000USB, the stamp-editing tool P-touch Editor software, Stampcreator Express software and the SC-2000USB printer driver must be installed.

Follow the procedure described below to install the stamp-editing tool P-touch Editor software onto the computer.

☞ *You must have administrator privileges in order to install the software on a computer running Windows® XP, Windows Vista® or Windows® 7.*

❶ Connect the SC-2000USB to the computer's USB or serial port, and then **turn on only the computer**.

❷ Insert the SC-2000USB CD-ROM into the computer's CD-ROM drive.
A dialog box that allows you to select the language and to select which components to install. Select the language of Windows® that you are using, and then click the Standard Installation button.

The InstallShield® Wizard for installing the software starts up.
If the dialog box does not appear automatically, go to My Computer (Computer), double-click the CD-ROM icon, and then double-click Setup.exe.

For Windows Vista® and Windows® 7 users only

When the AutoPlay dialog box appears, click "Run Setup.exe".

❸ When the Licence Agreement dialog box appears, please read the licence agreement carefully.
If you accept all terms of the preceding licence agreement, click the Yes button to continue.

❹ In the Customer Information dialog box, type the necessary information into the appropriate boxes, and then click the Next button.
If the information has already been registered in Windows®, it will appear in the appropriate boxes.

❺ In the Choose Destination Location dialog box, if it is OK to install the P-touch Editor software into the folder shown in the "Destination Folder" box, click the Next button.
To install the software into a different folder, click the Browse button, and then select the folder.

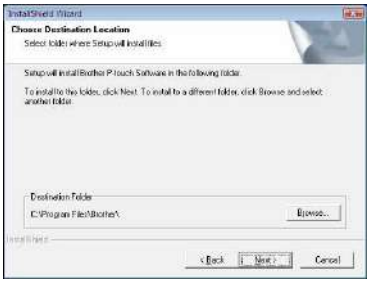

❻ In the Add shortcut dialog box, specify where to add shortcuts for P-touch Editor, and then click the Next button.

❼ If you are satisfied with the settings that appear in the Start Copying Files dialog, click the Next button to begin copying files.

❽ When the Driver Setup dialog box appears, select “USB cable” if the SC-2000USB is connected to a USB port or select “Serial cable” if the SC-2000USB is connected to a serial port, and then click the OK button.

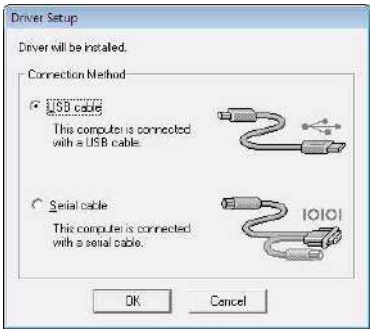

For a USB port connection, continue with step 9.

For a serial port connection, continue with step 16.

For a USB port connection:

❾ For Windows Vista® and Windows® 7 users only

After checking the files during the installation procedure, when the Windows Security box appears, click the Install button.

For Windows® XP users only

After checking the files during the installation procedure, when the Software Installation dialog box appears, click the Continue Anyway button.

❿ When this Driver Setup dialog box appears, connect a USB cable from your computer to the SC-2000USB. Then turn the SC-2000USB on.

For Windows Vista® and Windows® 7 users

⓫ Click the Finish button to exit the wizard.

This completes the installation of P-touch Editor, Stampcreator Express and the printer driver for USB connection.
Restart your computer now.

For Windows® XP users

⓫ The Found New Hardware Wizard starts up.
When asked if Windows can connect to Windows Update to search for software, select “No, not this time”, and then click the Next button.

⓬ In the next dialog box, select “Install the software automatically (Recommended)”, and then click the Next button.

⓭ When the Hardware Installation dialog box appears, click the Continue Anyway button.

⓮ Click the Finish button to exit the Found New Hardware Wizard.

⓯ Click the Finish button to exit the wizard.

This completes the installation of P-touch Editor software, Stampcreator Express software and the printer driver for a USB connection.
Restart your computer now.

For a serial connection:

⓰ A Driver Setup dialog box appears, allowing you to select whether to install or uninstall the printer driver. Check that “Brother SC-2000USB” is selected for installation, select “Install”, and then click the Next button.

⓱ A dialog box appears, allowing you to select the COM port where the SC-2000USB is connected. Select “COM1:” if the SC-2000USB is connected to the COM1 port, “COM2:” if the SC-2000USB is connected to the COM2 port, and then click the Next button.

⓲ In the dialog box that appears, allowing you to confirm how the installation will be carried out, check that the installation will be carried out as desired, and then click the Next button.

⓳ A dialog box showing that the printer has been installed appears.
Click the Next button.

⓴ Click the Finish button to exit the wizard.

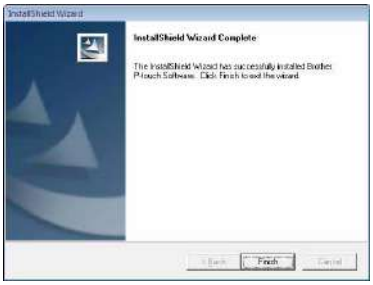

This completes the installation of P-touch Editor software, Stampcreator Express software and the printer driver for a serial connection.
Restart your computer now.

Using the Software

P–touch Editor software

❶ Use P-touch Editor to create a stamp design.

For details on using the P-touch Editor software to create a stamp design, refer to the P-touch Editor Help, which can be opened by selecting “How To” from the “Help” menu in the P-touch Editor software.

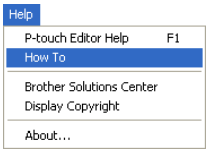

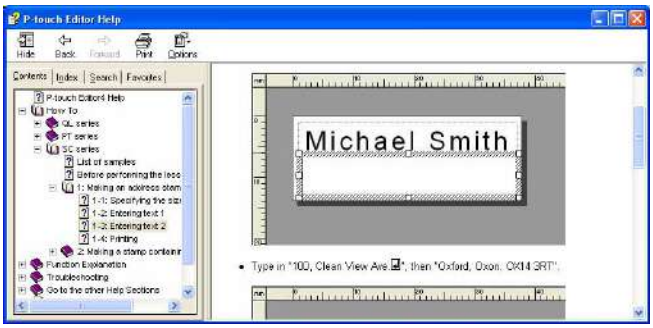

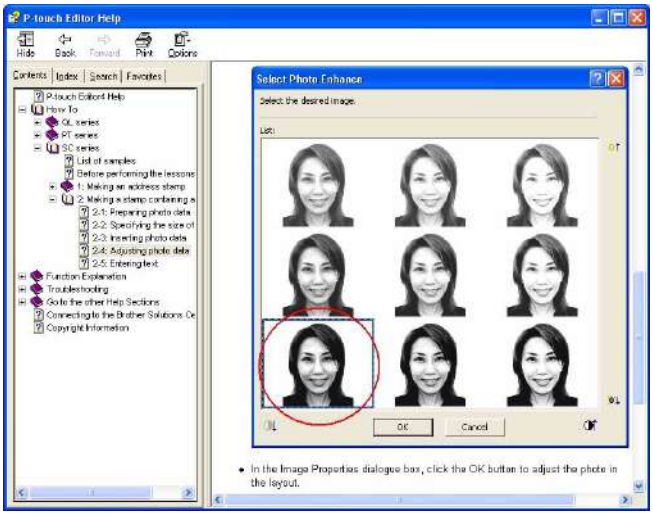

❷ Engrave a stamp with the stamp design created in step 1.

Click to display the Print Properties. (If they are already displayed, skip this step.)

Click in the Print Properties to display the Printer Setup dialog box.

Check that "Brother SC-2000USB" is selected below "Application Matching Printer", and then click the OK button.

Click ... in the Print Properties. The Print dialog box appears.

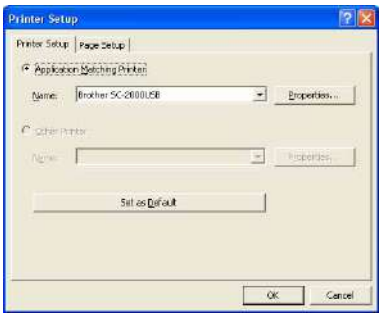

Select "Stamp", and then select the appropriate "Document Type" setting.

Logo: Best for stamps with a logo mark

Text: Good for stamps with text only

Text+Photo: Good for stamps with text and photos (graphics)

Photo: Best for stamps containing photos with a "Photo Enhance" effect applied.

Then, click the Print button to start printing a draft sheet.

For details on engraving a stamp, refer to the section "Engraving a stamp" on page 22 of this Quick Reference.

❸ Print an ID label.

Click ... in the Print Properties. The Print dialog box appears.

Select "ID Label", and then select the appropriate "Document Type" setting.

Insert an ID label sheet into the ID Label Slot of the SC-2000USB, then click the Print button to start ID label printing.

For details on printing an ID label, refer to the section "Printing an ID label for the engraved stamp" on page 24 of this Quick Reference.

For details on assembling a stamp, refer to the section "Assembling the Stamp" on page 25 of this Quick Reference.

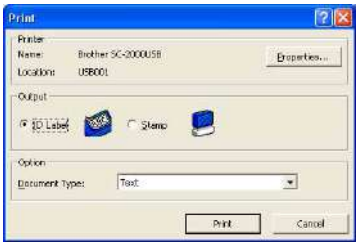

Stampcreator Express software

❶ Start up Stampcreator Express by following the procedure described below.

(a) Click the start button in the taskbar to display the Start menu.

(b) Select "All Programs".

(c) Select "Stampcreator Express".

(d) Click "Stampcreator Express".

❷ After Stampcreator Express is started, the Style Selection window appears.
Click the Browse button.

❸ In the Select a Style dialog box, click the arrow in the "Category" box, and then click the desired category to select it.

In this example, select the category "02_OFFICE".

❹ Select a style by double-clicking it or by clicking the style, then clicking the OK button.

In this example, select the style "203".

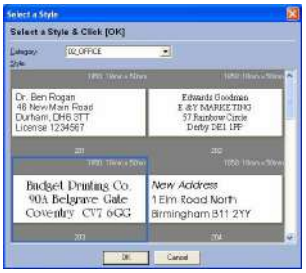

❺ The Type Text window appears.
Select the text line that you want to change by clicking it, by selecting the number of the text line from the drop-down list, or by pressing the Enter key.

In this example, select text line 1, and then type in “Brother Industries, Ltd.”
Change text lines 2 and 3 as you wish.
If the entered text exceeds the length of the original text, the text size is automatically adjusted so that the text fits within the text field.

❻ To change the font, character style or spacing of each text line, select the text line, and then click **A** to display the Font dialog box.

Select the Font from the “Font” box, click the appropriate button to select the bold or italic character style, and then set the character spacing. Then, click the Close button to return to the Type Text window.

☞ *Note: The spacing is applied to all text lines.*

In this example, select “Arial Black” as the Font, select the italic character style, and then set the Spacing to “-2 %”.

❼ When you have finished designing the stamp, click the Next button.

❽ Below “Print ID Label or Make Stamp?” in the next window that appears, click the Stamp button.

When the Print Stamp dialog box appears, check the stamp size, and then click the OK button.

For details on engraving a stamp, refer to the section “Engraving a stamp” on page 22 of this Quick Reference.

❾ Below “Print ID Label or Make Stamp?” in the window, click the ID Label button.

When the Print ID Label dialog box appears, check the stamp size, insert the appropriate ID label into the ID label slot of SC-2000USB, and then click the OK button.

For details on printing an ID label, refer to the section “Printing an ID label for the engraved stamp” on page 24 of this Quick Reference.

For details on assembling a stamp, refer to the section “Assembling the Stamp” on page 25 of this Quick Reference.

Adding new styles to the Stampcreator Express software

A style in the Stampcreator Express software is a type of template. A template is created from the same type of file designed using the P-touch Editor software.
For details on using the P-touch Editor software, refer to the User's Guide, which can be opened by selecting "User's Guide" from the "Help" menu in the P-touch Editor software.

❶ When creating a stamp design in the P-touch Editor software, set "Text Layout" on the Text Properties dialog box to "**Fixed Frame Size**".

To select a "Text Layout" setting:
Open the Text Properties dialog box by double-clicking the text object or clicking the text object and selecting "Text…" from the "Format" menu.

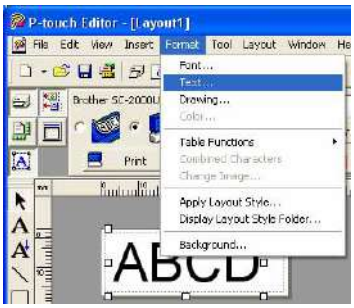

Select "**Fixed Frame Size**" in the "Text Layout" box, and then click the Details button.

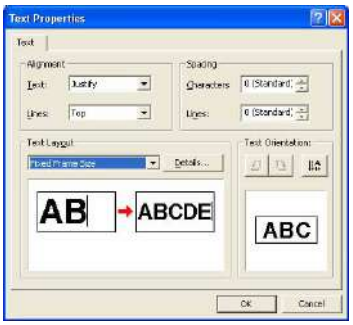

In the Text Options dialog box, select the "**Shrink to Fit**" option.

If the "Maintain Height-to-Width Proportion" check box is selected, the text size is automatically reduced so that the text fits within the text field when the text exceeds the length of the original text.

If the "Maintain Height-to-Width Proportion" check box is cleared, the text width is automatically adjusted so that the text fits within the text field when the text exceeds the length of the original text.

❷ Save the stamp design as a template file in the ".lbl" file format.
Select "Save As…" from the "File" menu.

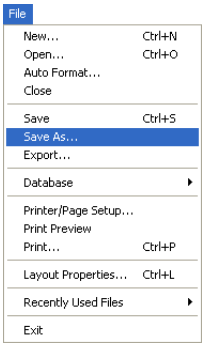

Save the template file in the following folder.
<Windows_drive>:\Program Files\Brother\SE42\Template\SC2000\

In this example, make a new folder titled "09_Original" in the "SC2000USB" folder and name the template file "901".
Then, click the Save button.

❸ Start up Stampcreator Express, and then click the Browse button.

"09_Original" is available in the "Category" list in the Select a Style dialog box, and the new style "901" is available in the "09_Original" category.

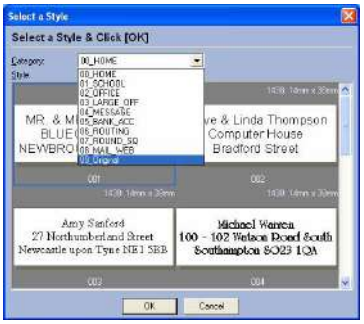

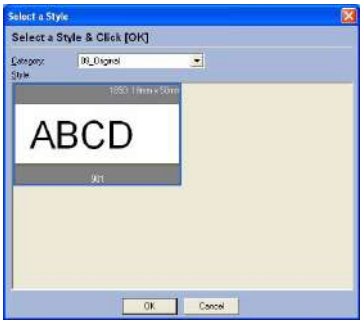

Using the SC–2000USB

After you have designed a stamp layout using the P-touch Editor software or Stampcreator Express software, you can engrave it into a stamp.

Installing the ink ribbon cassette

❶ Press down on the ink ribbon compartment cover button to open the cover.

☞ *Open and close the ink ribbon compartment cover by pressing only on the positions specified.*

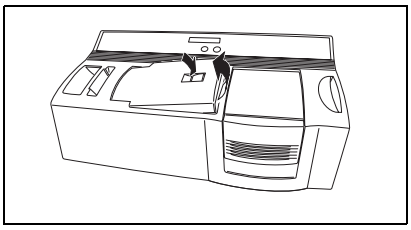

❷ If the ink ribbon in the cassette is loose, turn it over and use your finger to wind the toothed wheel on the large knob on the right side until there is no slack in the ribbon.

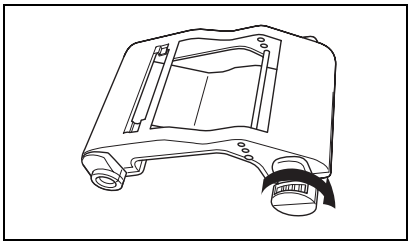

❸ Insert the knobs on the left end of the cassette into the slots on the left side of the compartment, then push down on the right end of the cassette so that the knobs on the right side slide into the slots on the right side of the compartment.

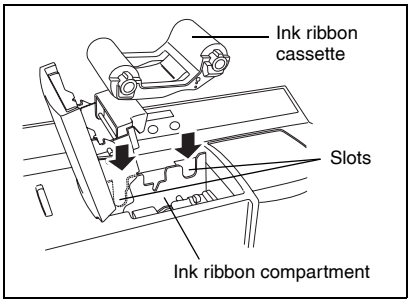

❹ Slowly close the ink ribbon compartment cover so that it locks into place.

☞ *Be careful not to pinch your fingers with the compartment cover while closing it.*

Loading draft sheets and installing the draft tray

❶ Slide out the inner tray.

❷ Lift up the draft tray lid.

❸ Place the draft sheets (with the words “DRAFT SHEET” facing up) into the draft tray so that the corners of the sheets fit under the tabs in the front corners of the tray.

☞ *No more than 50 draft sheets should be loaded into the draft tray.*

Be sure that there is no dust, fingerprints, etc. on the draft sheets.

Do not use a draft sheet that has been folded.

Be sure that a cleaning sheet is not accidentally inserted together with the draft sheets.

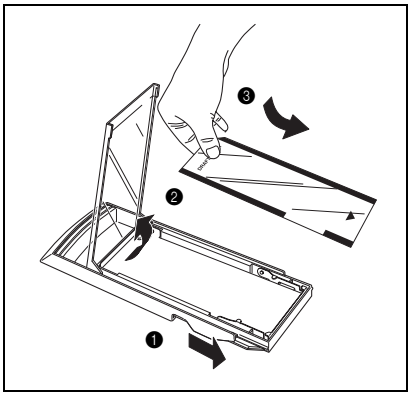

❹ Close the draft tray lid.

❺ Slide the inner tray back into the outer case.

❻ Fully insert the draft tray straight into the draft tray slot.

☞ *Be careful not to pinch your fingers while inserting the draft tray. To remove the draft tray, grab its outer case, then pull out the entire draft tray.*

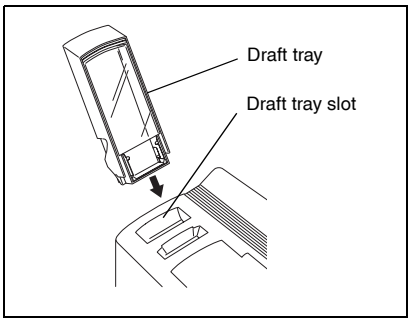

After installing the ink ribbon cassette and the draft tray loaded with draft sheets, you can use P-touch Editor software or Stampcreator Express software to create any layout containing graphics and text, and then engrave it into a stamp.

Engraving a stamp

❶ Turn on the SC-2000USB and start up the computer.

❷ Start up P-touch Editor and make sure that "SC-2000USB" is selected as the printer in the Print Setup dialog box ([Print Setup] command in the [File] menu of the PC software).

❸ In the Page Format setting of the Page Properties, select the desired stamp size, then design your stamp layout.

❹ Click the [Print] command in the [File] menu, select "Stamp" in the Print dialog box, then click the OK button. After the data is printed onto the draft sheet, which is then fed over the xenon lamp, the message "INSTALL STAMP !" appears on the LCD display of the SC-2000USB.

❺ Lift open the stamp compartment cover, slowly pull the lever toward you to open the doors in the stamp compartment, and then check that the printed draft sheet is stopped over the xenon lamp unit.

☞ *Be careful not to touch the draft sheet that is stopped over the xenon lamp unit.*
Do not allow the clear plastic surface of the xenon lamp unit to become dirty or scratched. Use a soft cloth to wipe off any dust on the clear plastic surface.
To cancel engraving, press the Mode button on the SC-2000USB until "CANCEL" appears on the display, then press the Set button to feed out the draft sheet.

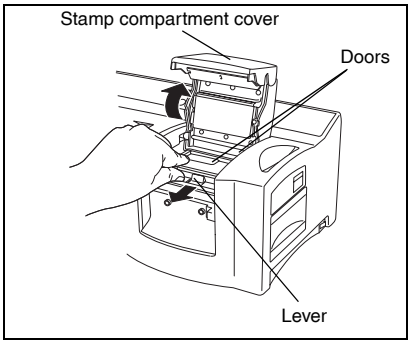

❻ Remove the cap from a stamp, insert the stamp between the doors so that the teeth in the centre of the doors fit into the notches in the centre of the stamp and so that the stamp surface lies flat on the printed draft sheet, and then slowly close the doors.

☞ *Do not use a stamp that has the protective film covering removed from the stamp surface or that has been assembled with the skirt and grip.*
Before inserting the stamp, be sure that there is no dust on the protective film covering its surface.
Be sure that the stamp is at the same temperature as the SC-2000USB, otherwise the stamp may not be engraved correctly.
Be careful not to break the ink bag inside the stamp.

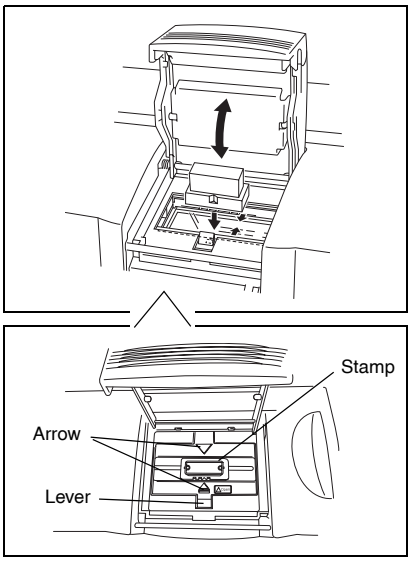

❼ Close the stamp compartment cover so that it locks and causes the xenon lamp to flash. The message “REMOVE STAMP !” appears on the display.

☞ *Be careful not to pinch your fingers with the compartment cover while closing it.*
Do not open the stamp compartment cover until after the flash has fired.

❽ Open the stamp compartment cover and the doors, remove the stamp, and then slowly peel the protective film off the surface of the stamp. The printed draft sheet is fed out from the exit slot on the top right end of the SC-2000USB.

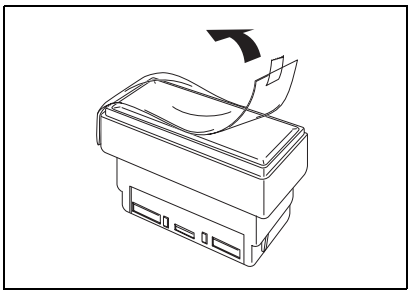

Printing an ID label for the engraved stamp

After we have engraved the stamp, we can print the same layout on a label which we can attach to our stamp to easily identify it. In order to see how the stamp will appear when it is engraved, the ID label can be printed before engraving the stamp.

❶ Insert an ID label sheet, so that the words “ID LABEL” can be read, straight into the narrow ID label slot to the right of the draft tray slot.

☞ *Be careful not to touch the print area of the ID label sheet since dust, fingerprints, hand creams, etc. may prevent the characters from being printed correctly.*
Be sure that the ID label is the correct size.
Do not use an ID label that has been folded.

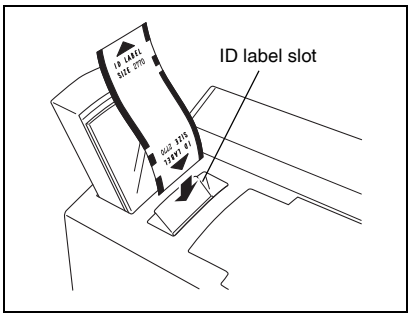

❷ With the layout of the engraved stamp displayed in P-touch Editor, click the [Print] command in the [File] menu, select “ID Label” in the Print dialog box, then click the OK button.

❸ After the label is printed and fed from the exit slot on the top right end of the SC-2000USB, remove it, peel off the ID label from its backing paper, affix it to the top of the stamp grip.

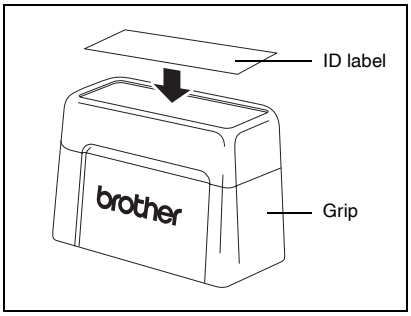

Assembling the Stamp

❶ With the cap on the stamp, place it face down.

☞ *If the packing board has been removed, put it back into the stamp.*

❷ Place the skirt over the top of the stamp and push it down firmly.

❸ Place the grip over the skirt and push it down firmly so that the fasteners hook onto the tabs and the ink bag inside the stamp breaks.

❹ Keep the stamp facing down to speed up the flow of the ink.

☞ *The length of time that you must wait before the ink begins to flow from the stamp depends on many factors, such as the size of the engraved area and the room temperature.*
Keep the stamp covered when it is not being used.

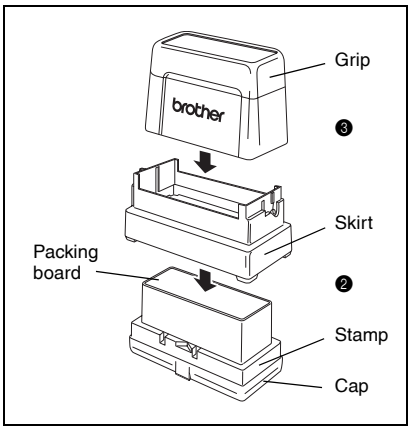

Correcting the Engraved Stamp

Even after the stamp is engraved, it can be corrected using the stamp correction pen to seal any undesired area in the stamp so that ink will not flow through it.

❶ With the cap on, hold the enclosed stamp correction pen upright and shake it well.

❷ Remove the cap and press the tip of the pen down onto a piece of scrap paper until ink appears.

❸ Make a test stamp, and then use the pen to fill in any undesired areas in the surface of the engraved stamp.

☞ *Do not try stamping until the correction fluid is completely dry.*
Be sure to apply plenty of correction fluid to the areas that you wish to fill in.
Keep the cap on the stamp correction pen when it is not being used.

☞ *You can also use the correction pen to make corrections if ink has run from the space between the glossy area and the non-glossy area around the printing surface.*

☞ *When applying the correction fluid, place plenty of fluid on the area you want to correct like you are making a point with the tip of the pen, so the tip of the pen does not rub off the area you are correcting.*

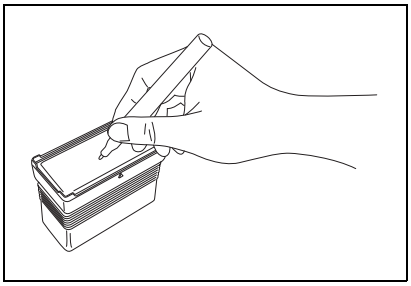

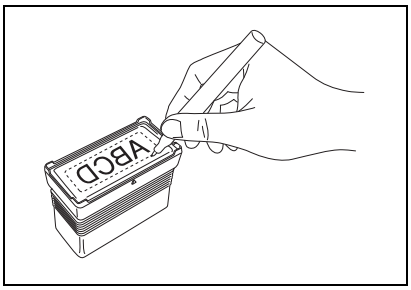

Refilling the Stamp Ink

If the stamp is faint or incomplete, use the ink bottle (sold separately) to refill the ink.

❶ Remove the grip from the stamp.

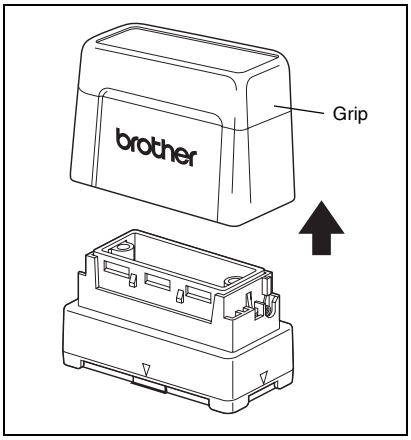

❷ Use the ink bottle to add five drops of ink to each refill hole in the stamp.

☞ *Be extremely careful when adding ink.*
Do not use ink other than that specified, otherwise the stamp may be damaged.
If too much ink is added, it may start leaking from the stamp's surface. In that case, make a test stamp on scrap paper to remove any excess ink.

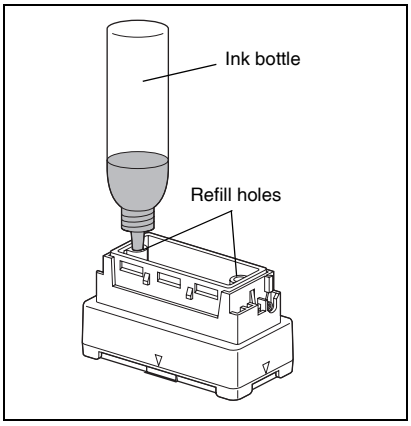

❸ Put the grip back on the stamp.

☞ *Immediately after refilling the ink, keep the stamp facing down until the ink begins to flow from the stamp.*
After refilling the ink, be sure to put the cap back on the ink refill bottle.

Maintenance

Cleaning the draft sheet rollers

The draft sheet rollers should be cleaned after 50 draft sheets (1 pack) have been printed.

❶ Peel off the pre-cut section from the side of the cleaning sheet marked SIDE A.

☞ *Never reuse a cleaning sheet.*
Do not use a cleaning sheet that has been folded or damaged or has had any part of the paper other than the pre-cut section removed.

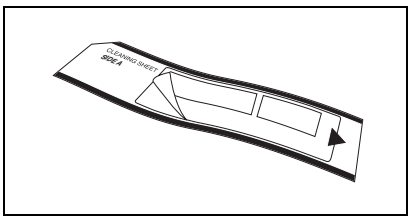

❷ Load the cleaning sheet into the draft tray with side A facing up as shown in the illustration.

❸ Insert the draft tray into the draft tray slot.

❹ Press the Mode button on the SC-2000USB until "CLEAN" appears on the LCD display.

❺ Press the Set button to feed in the cleaning sheet, and then eject it from the exit slot.

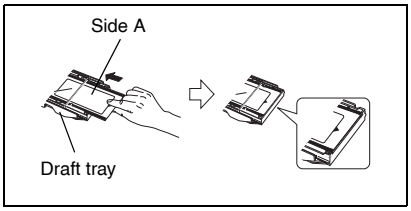

☞ *Store unused cleaning sheets in their packages and do not expose them to high temperatures, high humidity or direct sunlight.*

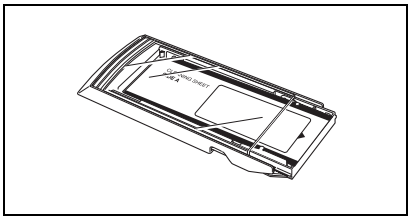

Cleaning the ID label rollers

The ID label rollers should be cleaned if the ID labels often feed incorrectly.

❶ Peel off the pre-cut section from the side of the cleaning sheet marked SIDE A.

☞ *Never reuse a cleaning sheet.*
Do not use a cleaning sheet that has been folded or damaged or has had any part of the paper other than the pre-cut section removed.

❷ Insert the cleaning sheet into the ID label slot with side A facing toward the ink ribbon compartment.

❸ Press the Mode button on the SC-2000USB until "CLEAN" appears on the LCD display.

❹ Press the Set button to feed in the cleaning sheet, and then eject it from the exit slot.

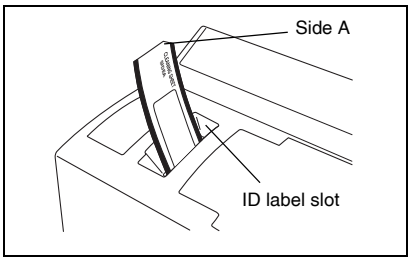

Cleaning the print head

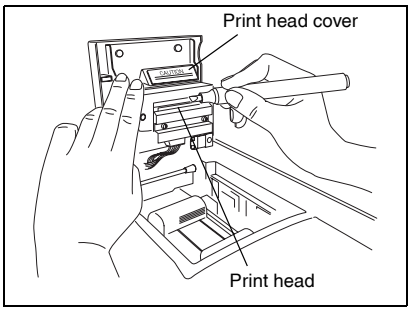

❶ Flip off the SC-2000USB's power switch.

❷ Open the ink ribbon compartment cover, then pull back the print head cover.

❸ Use the enclosed print head cleaning pen to gently wipe back and forth along the print head.

☞ *Be careful not to touch the print head.*
Keep the cap on the print head cleaning pen when it is not being used.

❹ Release the print head cover and close the ink ribbon compartment cover.

❺ Try printing again.

❻ If the printed characters are still blurred, repeat steps ❶ through ❺.

Replacing the xenon lamp unit

The xenon lamp unit has a life span of approximately 2000 flashes. When the message "REPLACE Xe UNIT" appears on the display, the xenon lamp unit must be replaced.

❶ Press the Mode button on the SC-2000USB until "RESET COUNTER" appears on its display, then press the Set button.

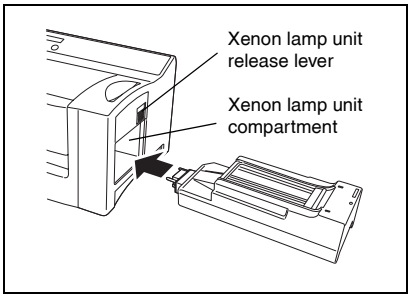

❷ Slide the xenon lamp unit release lever up and pull out the xenon lamp unit.

❸ Fully insert the new xenon lamp unit until it locks into place. Check that "N = 0" appears on the display of the SC-2000USB.

❹ Press the Set button on the SC-2000USB.

Troubleshooting

PROBLEM	SOLUTION
• Nothing happens after the OK button is clicked in the Print dialog box.	• Delete the print job and after turning the SC-2000USB off, then on again, try printing again.
• The printed characters are blurred.	• Clean the print head as explained on page 28.
• Some of the printed characters are missing.	• Clean the print head as explained on page 28. • Check that there is no slack or wrinkles in the ink ribbon. • If there is dust, fingerprints, etc. on the draft sheet or ID label sheet, use a clean sheet.
• The characters are not printed on the ID label or engraved in the stamp in the correct position.	• Check that the ID label or stamp is the correct size. • If the problem cannot be corrected, contact your service representative.
• A draft sheet was not fed from the draft tray.	• Check that a draft sheet has been loaded in the draft tray. • Check that the draft sheet has been correctly loaded into the draft tray. • Check that no more than 50 draft sheets are loaded into the draft tray. • Check that the draft tray has been fully inserted into the draft tray slot. • Clean the draft sheet rollers as explained on page 27.
• A draft sheet or ID label sheet does not feed into the ID label slot.	• Check that the ID label sheet has been inserted into the ID label slot as far as possible. • Check that the ID label sheet is inserted so that the words “ID LABEL” can be read. • Check that the ID label is the correct size. • Clean the ID label rollers as explained on page 27.
• The stamp cannot be inserted.	• Be sure to open the doors within the stamp compartment by pulling the lever toward you. • Check that the cap was removed from the stamp before trying to insert it. • Check that the skirt is not attached to the stamp before trying to insert it. • Check that the grip is not attached to the stamp before trying to insert it.
• The draft sheet is fed out before the message “INSTALL STAMP !” is displayed.	• Turn off the machine, and wait a while before turning it back on and trying again to engrave a stamp.
• The stamp could not be engraved.	• Check that a stamp is inserted. • Check that the stamp is inserted correctly. • Check that the stamp is the correct size. • Check that the message “INSTALL STAMP !” appears on the LCD display and that the printed draft sheet has stopped over the xenon lamp unit. • Check that the stamp compartment cover is closed so that it locks. • If the problem cannot be corrected, contact your service representative.

PROBLEM	SOLUTION
• The xenon lamp flashed, but the desired stamp could not be engraved.	• Check that the cap was removed from the stamp before it was inserted. • Check that there is no dust on the protective film covering the surface of the stamp. • Check that the clear plastic surface of the xenon lamp unit is not dirty. • Check that the printed draft sheet stopped over the xenon lamp unit before trying to engrave a stamp. • The lines in the layout are too thin, the text is too small, or the fill pattern is too detailed. • Replace the xenon lamp unit as explained on page 28.
• The stamp was engraved too much.	• The layout is too detailed.
• The stamp was not engraved well enough.	• Check that the clear plastic surface of the xenon lamp unit is not dirty. • Replace the xenon lamp unit as explained on page 28.
• Half of the stamp was either engraved too much or not enough.	• Check that the stamp is inserted so that its surface lies flat on the printed draft sheet before engraving it.
• The stamp is attached to the printed draft sheet.	• Check that the protective film was not peeled off the surface of the stamp before it was engraved.
• The draft sheet is not fed out after the stamp is engraved (the xenon lamp flashed).	• Check that the draft sheet feeds out automatically the next time that an ID label sheet or another draft sheet is printed.
• The draft sheet or ID label sheet is jammed within the unit or the error messages “REMOVE LABEL 1”, “REMOVE LABEL 2”, or “REMOVE LABEL 3” appears on the display.	• Turn off the SC-2000USB, then remove the jammed draft sheet or ID label sheet as explained on page 31.

Removing a jammed draft sheet or ID label sheet

For a jam at the draft tray slot ("CHECK TRAY !" appears on the display):

❶ Grab the outer case of the draft tray, then pull out the tray.

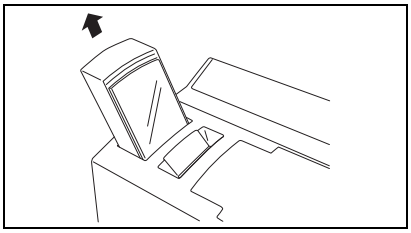

❷ Pull out the jammed draft sheet.

☞ *Do not pull too hard.*

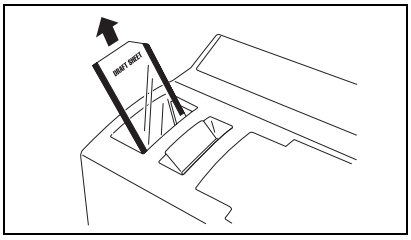

For a jam at the ID label slot ("REMOVE LABEL 1" or "CHANGE LABEL" appears on the display):

Slowly pull out the jammed draft sheet or ID label sheet.

☞ *Do not pull too hard.*

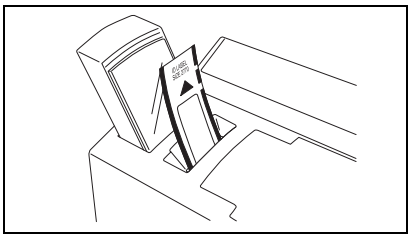

For a jam in the ink ribbon compartment ("REMOVE LABEL 1", "REMOVE LABEL 2" or "REMOVE LABEL 3" appears on the display):

❶ Open the ink ribbon compartment cover and remove the ink ribbon cassette.

❷ Slowly pull the jammed draft sheet or ID label sheet out of the ink ribbon compartment.

☞ *Do not pull too hard.*

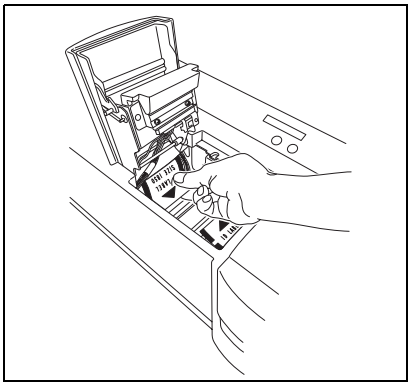

For a jam near the xenon lamp unit ("REMOVE LABEL 3" appears on the display):

❶ Open the ink ribbon compartment cover.

❷ Slide the xenon lamp unit release lever up and pull out the xenon lamp unit.

❸ Put your hand into the xenon lamp compartment and slowly pull out the jammed draft sheet or ID label sheet.

☞ *Do not insert your hand too far into the xenon lamp compartment. Do not pull too hard.*

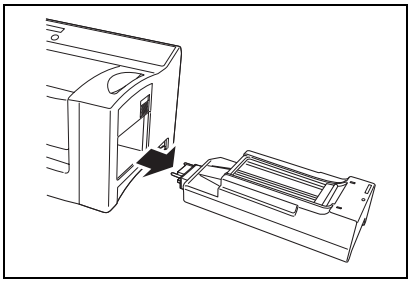

Error Message List

MESSAGE	SOLUTION
CLOSE COVER !	• Close the ink ribbon compartment cover.
CHECK RIBBON !	• Install the ink ribbon cassette. • Replace the ink ribbon cassette.
INSTALL Xe UNIT	• Install the xenon lamp unit.
REPLACE Xe UNIT	• Replace the xenon lamp unit.
INSERT LABEL !	• Insert an ID label sheet into the ID label slot.
CHANGE LABEL !	• Correctly insert the specified draft sheet or ID label sheet into the ID label slot.
REMOVE LABEL 1	• Remove the draft sheet or ID label sheet from the ID label slot or pull out the draft tray and remove the draft sheet.
REMOVE LABEL 2	• Open the ink ribbon compartment cover, and then remove the draft sheet or ID label sheet.
REMOVE LABEL 3	• Open the ink ribbon compartment cover, remove the xenon lamp unit, and then remove the draft sheet or ID label sheet.
CHANGE STAMP !	• Insert a stamp that is the correct size.
RESET STAMP !	• Re-insert the stamp.
I/F ERROR !	• Check the interface cable connections. • For Serial connection only, check the COM port setting on the PC. Display the printer Properties box, and then select the following setting for "Port Setting" of the COM port. Bits per second : 115200 Data bits : 8 Parity : None Stop bits : 1 Flow Control : Hardware • Contact your service representative.
CACHE FULL !	• Check the interface cable connections. • Contact your service representative.
SRAM DEFECT !	• Contact your service representative.
HEAD ERROR !	• Contact your service representative.
Xe UNIT ERROR !	• Replace the xenon lamp unit. • Contact your service representative.
SIZE PCB ERROR!	• Contact your service representative.
CHECK TRAY !	• Load draft sheets into the draft tray, and then insert the draft tray into the draft tray slot. • Clean the draft sheet rollers using a cleaning sheet. • Contact your service representative.
CHARGE ERROR !	• Turn off the machine, and wait for one minute before turning on the machine and trying to print again.

brother®