PHILIPS
HD3132

User manual

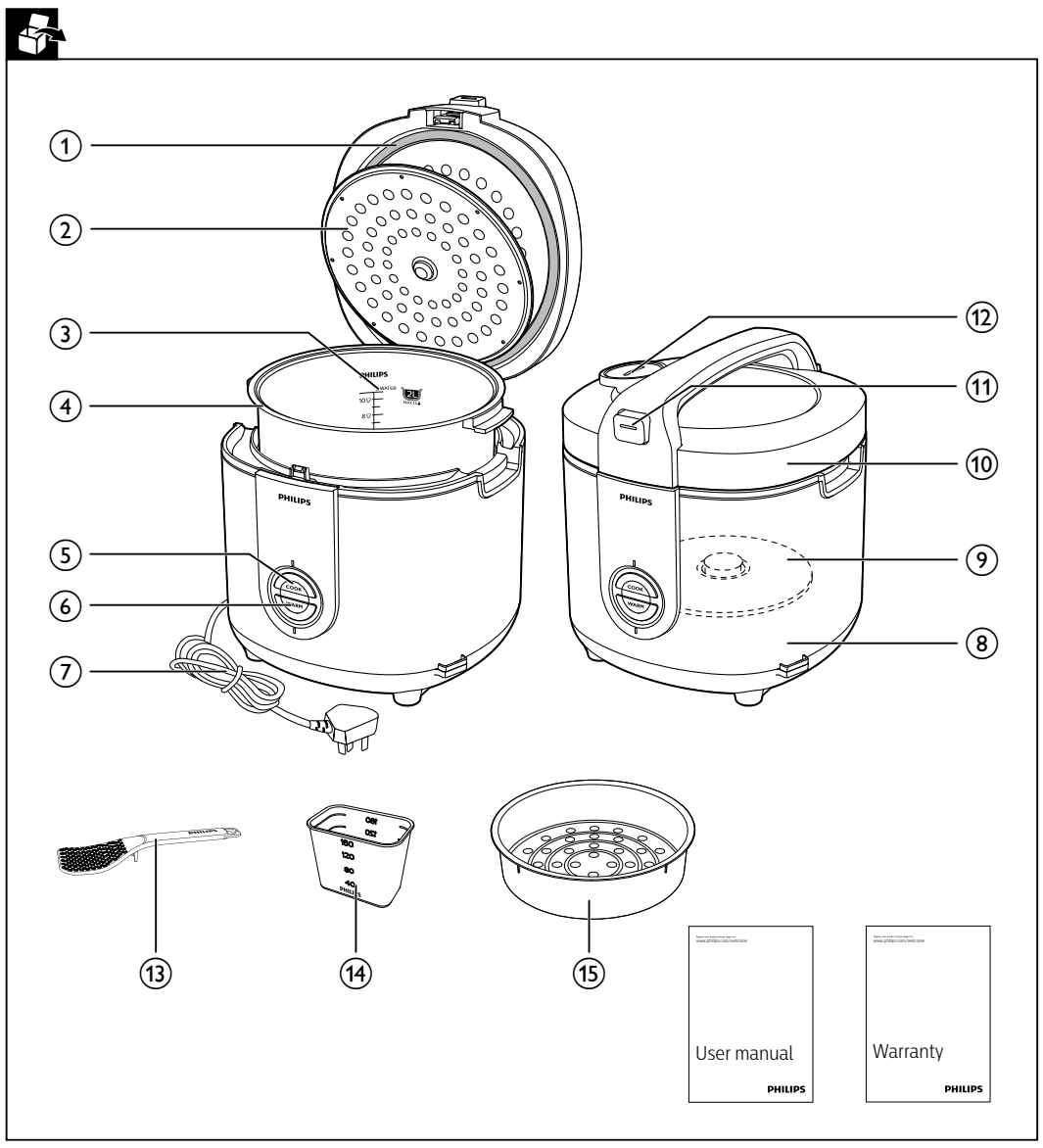

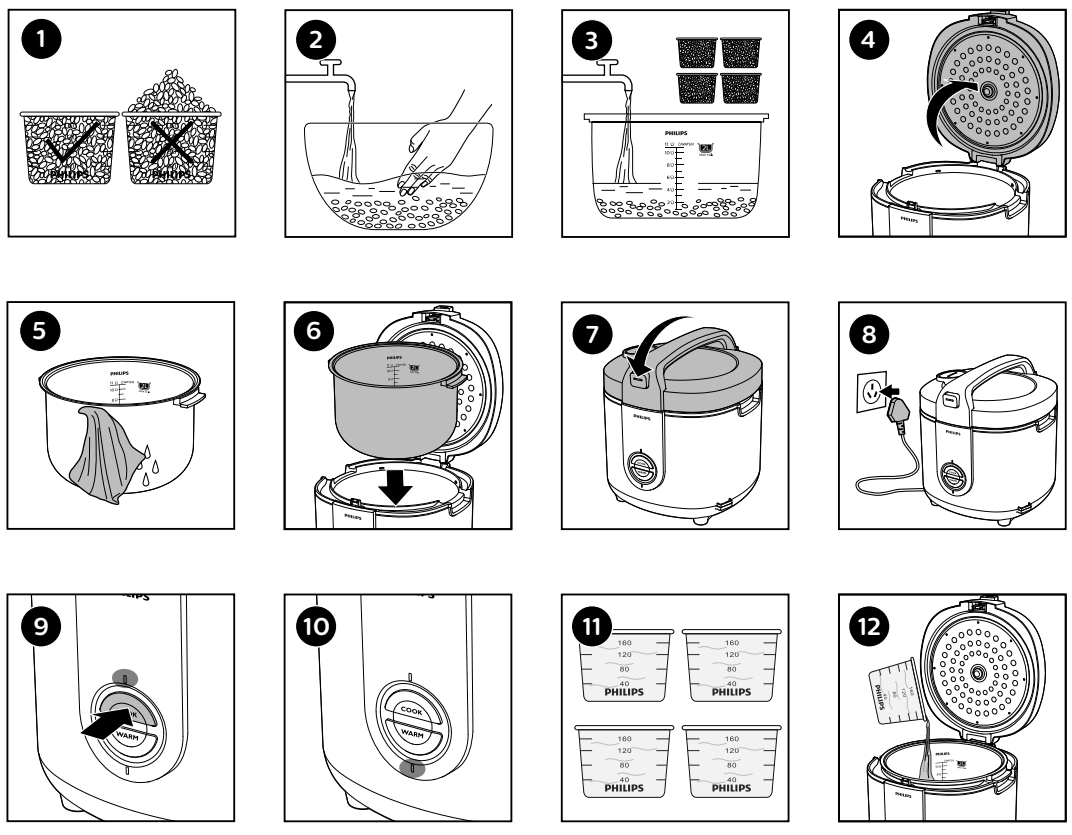

© 2021 Philips Domestic Appliances Holding B.V.
All rights reserved.
6608.000.0779.3 (13/05/2021)

1 Your rice cooker

Congratulations on your purchase, and welcome to Philips! To fully benefit from the support that Philips offers, register your product at **www.philips.com/welcome**.

2 Important

Read this important information leaflet carefully before you use the rice cooker and save it for future reference.

Danger

- The appliance must not be immersed.

Warning

- This appliance is not intended for use by persons (including children) with reduced physical sensory or mental capabilities, or lack of experience and knowledge, unless they have been given supervision or instruction concerning use of the appliance by a person responsible for their safety.
- Children should be supervised to ensure that they do not play with the appliance.
- This appliance should be positioned in a stable situation with the handles (if any) positioned to avoid spillage of the hot liquids.
- This appliance is intended to be used in household and similar applications such as:
  - staff kitchen areas in shops, offices and other working environments;
  - farm houses;
  - by clients in hotels, motels and other residential type environments;
  - bed and breakfast type environments.
- If the supply cord is damaged, it must be replaced by the manufacturer, its service agent or similarly qualified persons in order to avoid a hazard.
- The appliance is not intended to be operated by means of an external timer or a separate remote-control system.
- WARNING: Make sure to avoid spillage on the power connector to avoid a potential hazard.
- WARNING: Always follow the instructions and use the appliance properly to avoid potential injury.
- According to the instructions prescribed in this user manual, use a soft damp cloth to clean the surfaces in contact with food and make sure to remove all the food residues stuck to the appliance.
- Check if the voltage indicated on the appliance corresponds to the local power voltage before you connect it.
- Only connect the appliance to a grounded power outlet. Always make sure that the plug is inserted firmly into the power outlet.
- Do not use the appliance if the plug, the power cord, the inner pot, the sealing ring, or the main body is damaged.
- Do not let the power cord hang over the edge of the table or worktop on which the appliance stands.
- Make sure the heating element, the temperature sensor, and the outside of the inner pot are clean and dry before you put the plug in the power outlet.
- Do not plug in the appliance or press any of the buttons on the control panel with wet hands.

Caution

- Caution: Surface of the heating element is subject to residual heat after use.
- Never use any accessories or parts from other manufacturers or that

Philips does not specifically recommend. If you use such accessories or parts, your guarantee becomes invalid.

- Do not expose the appliance to high temperatures, nor place it on a working or still hot stove or cooker.
- Do not expose the appliance to direct sunlight.
- Place the appliance on a stable, horizontal, and level surface.
- Always put the inner pot in the appliance before you put the plug in the power outlet and switch it on.
- Do not place the inner pot directly over an open fire to cook rice.
- Do not use the inner pot if it is deformed.
- The accessible surfaces may become hot when the appliance is operating. Take extra caution when touching the appliance.
- Beware of hot steam coming out of the steam vent during cooking or out of the appliance when you open the lid. Keep hands and face away from the appliance to avoid the steam.
- Do not lift and move the appliance while it is operating.
- Do not exceed the maximum water level indicated in the inner pot to prevent overflow which might cause potential hazard.
- Do not place the cooking utensils inside the pot while cooking, keeping warm or reheating rice.
- Only use the cooking utensils provided. Avoid using sharp utensils.
- To avoid scratches, it is not recommended to cook ingredients with crustaceans and shellfish. Remove the hard shells before cooking.
- Do not insert metallic objects or alien substances into the steam vent.
- Do not place a magnetic substance on the lid. Do not use the appliance near a magnetic substance.
- Always let the appliance cool down before you clean or move it.
- Always clean the appliance after use. Do not clean the appliance in a dishwasher.
- Always unplug the appliance if not used for a longer period.
- If the appliance is used improperly or for professional or semiprofessional purposes, or if it is not used according to the instructions in this user manual, the guarantee becomes invalid and Philips refuses liability for any damage caused.

Electromagnetic fields (EMF)

This Philips appliance complies with all applicable standards and regulations regarding exposure to electromagnetic fields.

3 What's in the box

Rice cooker main unit
Measuring cup
User manual
Rice scoop
Steam basket
Warranty card

Overview

①	Sealing ring	⑨	Heating element
②	Detachable inner lid	⑩	Lid
③	Water level indications	⑪	Lid release button
④	Inner pot	⑫	Detachable steam vent cap
⑤	Cook button	⑬	Rice scoop
⑥	Keep-warm button	⑭	Measuring cup
⑦	Power cord	⑮	Steam basket
⑧	Main body		

4 Using the rice cooker

Before first use

1 Take out all the accessories from the inner pot. Remove the packaging material of the inner pot.
2 Clean the parts of the rice cooker thoroughly before using the rice cooker for the first time (see chapter "Cleaning and Maintenance").

Note

- Make sure all parts are completely dry before you start using the rice cooker.

Preparations before use

Before using the rice cooker, you need to follow the preparation:

1 Measure the rice using the measuring cup provided (Fig. 1).
2 Wash the rice thoroughly (Fig. 2).
3 Put the pre-washed rice in the inner pot.
4 Add water to the level indicated on the scale inside the inner pot that corresponds to the number of cups of rice used (Fig. 3). Then smooth the rice surface.
5 Press the lid release button to open the lid (Fig. 4).
6 Wipe the outside of the inner pot dry (Fig. 5), then put the inner pot in the rice cooker (Fig. 6). Check if the inner pot is in proper contact with the heating element.
7 Close the lid of the rice cooker (Fig. 7), put the plug in the power socket (Fig. 8).

Note

- Each cup of uncooked rice normally gives 3 cups of cooked rice. Do not exceed the quantities indicated on the inside of the inner pot.
- The level marked inside the inner pot is just an indication. You can always adjust the water level for different types of rice and your own preference. If the voltage is unstable at the area you live, it is possible that the rice cooker overflows.
- Besides following the water level indications, you can also add rice and water at 1:1-1.2 ratio for rice cooking. Do not exceed the quantities indicated on the inside of the inner pot.
- Use a separate container to wash the rice to avoid damaging the non-stick coating of the inner pot.
- Make sure that the outside of the inner pot is dry and clean, and that there is no foreign residue on the heating element or the magnetic switch.

Cooking Rice

1 Follow the steps in "Preparations before use".
2 Press the cook button (**Cook**), and the cook indicator lights up (Fig. 9).
3 When the cooking is finished, the cooking indicator will be off.
4 The rice cooker switches to the keep warm mode automatically, and the keep warm (**Warm**) indicator lights up (Fig. 10).

Note

- Do not exceed the volume indicated nor exceed the maximum water level indicated in the inner pot, as this may cause the rice cooker to overflow.
- Do not open the lid right after the rice cooker enters the keep-warm mode and ensure that rice is in keep-warm mode for 15 minutes if you cook much rice.

Steaming

1 Measure a few cups of water with the measuring cup (Fig. 11).
2 Pour the water into the inner pot (Fig. 12).
3 Put the steam basket into the inner pot (Fig. 13).
4 Put the food into the steam basket (Fig. 14).
5 Close the lid of the rice cooker, put the plug in the power socket.
6 Press the cook button (**Cook**), and the cook indicator lights up (Fig. 9).
7 When the steaming is finished, pull up the control lever.
8 The rice cooker switches to the keep warm mode, and the keep warm (**Warm**) indicator lights up (Fig. 10).

Note

- Use a kitchen glove or a cloth, as the plate and steam basket will be very hot.
- You can cook rice while steaming food. Do not exceed the volume indicated nor immerse the steam basket in the water, as this may cause the rice cooker to overflow.
- You can adjust the water level as needed.

5 Cleaning and Maintenance

Note

- Unplug the rice cooker before starting to clean it.
- Wait until the rice cooker has cooled down sufficiently before cleaning it.

Interior

Inside of the lid and the main body:
- Wipe with wrung out and damp cloth.
- Make sure to remove all the food residues stuck to the rice cooker.

Heating element:
- Wipe with wrung out and damp cloth.
- Remove food residues with wrung out and damp cloth or toothpicks.

Exterior

Surface of the lid and outside of the main body:
- Wipe with a cloth damped with soap water.
- Only use soft and dry cloth to wipe the control panel.
- Make sure to remove all the food residues around the control buttons.

Accessories

Rice scoop, inner pot, steam basket, steam vent cap, detachable inner lid:
- Soak in hot water and clean with sponge.

6 Recycling

Do not throw away the product with the normal household waste at the end of its life, but hand it in at an official collection point for recycling. By doing this, you help to preserve the environment.
Follow your country's rules for the separate collection of electrical and electronic products. Correct disposal helps prevent negative consequences for the environment and human health.

7 Guarantee and service

If you need service or information, or if you have a problem, visit the Philips website at **www.philips.com** or contact the Philips Customer Care Center in your country. You can find its phone number in the worldwide guarantee leaflet. If there is no Customer Care Center in your country, go to your local Philips dealer.

8 Specifications

Model Number	HD3132
Rated power output	875W
Rated capacity	6.0L
Rice capacity	2.0L

9 Troubleshooting

If you encounter problems when using this rice cooker, check the following points before requesting service. If you cannot solve the problem, contact the Philips Consumer Care Center in your country.

Problem	Solution
The lights on the buttons does not go on.	There is a connection problem. Check if the power cord is connected to the cooker properly and if the plug is inserted firmly into the power outlet.
	The light is defective. Take the appliance to your Philips dealer or a service center authorized by Philips.
The rice is not cooked.	There is not enough water. Add water according to the scale on the inside of the inner pot.
	You did not press down the control key.
	Make sure that there is no foreign residue on the heating element and the outside of the inner pot before switching the rice cooker on.
	The heating element is damaged, or the inner pot is deformed. Take the cooker to your Philips dealer or a service center authorized by Philips.
The rice is not well cooked.	Add more water.
The cooker does not switch to keep warm mode automatically in "Rice Cooking" mode.	The temperature control is defective. Take the appliance to your Philips dealer or a service center authorized by Philips.
The rice is scorched.	You have not rinsed the rice properly. Rinse the rice until water runs clear.
Water spills out of the rice cooker during cooking.	• Make sure that you add water to the level indicated on the scale inside the inner pot that corresponds to the number of cups of rice used. • Make sure the water does not exceed the next level on the scale, as this may cause the appliance to overflow during cooking.
Rice smells bad after cooking.	Clean the inner pot with some washing detergent and warm water.
	After cooking, make sure the steam vent cap, inner lid and inner pot is cleaned thoroughly.