Shark WANDVAC™

CORD-FREE HANDHELD VACUUM

WV203ANZ

IMPORTANT SAFETY INSTRUCTIONS – FOR HOUSEHOLD USE ONLY

READ CAREFULLY BEFORE USE – SAVE THESE INSTRUCTIONS

⚠ WARNING

To reduce the risk of injury, fire, electric shock, and property damage resulting from improper use of the appliance, carefully observe the following instructions. This unit contains electrical connections and moving parts that potentially present risk to the user.

POWER SUPPLY, CHARGING DOCK, AND VACUUM CONTAIN ELECTRICAL CONNECTIONS:

1. There are **NO** serviceable parts.
2. **DO NOT** use to vacuum any liquids.
3. **DO NOT** immerse in water or other liquids.
4. If vacuum is damaged, discontinue use.
5. To avoid fire, explosion, or injury, inspect vacuum and charging dock for any damage before use. **DO NOT** use damaged vacuum or charging dock.
6. **DO NOT** use outdoors or on wet surfaces. Use only on dry surfaces.
7. If vacuum cleaner is not working as it should, or has been dropped, damaged, left outdoors, or immersed in water, call Mann&Noble Customer Service on AU 02 8801 7666 NZ 0800 112 660 for advice.
8. **DO NOT** handle charger or vacuum cleaner with wet hands.
9. **DO NOT** leave vacuum cleaner unattended while powered on.
10. Keep vacuum away from heated surfaces.
11. Always turn off vacuum before connecting charging dock.
12. Use only Shark® chargers and batteries. Other types of batteries may burst, causing injury and damage.
13. Use charging dock on flat and stable surfaces only.
14. **DO NOT** incinerate appliance, even if it is severely damaged, as lithium-ion battery may explode in a fire.

GENERAL USE

15. **DO NOT** carry the charger by the cord or yank to disconnect from an outlet; instead grasp the plug and pull to disconnect.
16. Keep charger cord away from heated surfaces.
17. Use only as described in this manual.
18. Keep your work area well lit.
19. To avoid unintentional starting, always turn off the vacuum cleaner before picking it up or carrying it, and before attaching or detaching the charger, dust cup, filter, or any accessories.
20. **DO NOT** put any objects into openings.
21. **DO NOT** use if any opening is blocked; keep free of dust, lint, hair, or anything that may reduce airflow.
22. This vacuum is not a toy, and must not be played with. Children over 8 years old and persons with reduced physical, sensory, or mental capabilities may only use the vacuum with supervision or prior safety instruction and an understanding of the hazards involved. Children may not clean or maintain the vacuum without supervision.
23. **DO NOT** use without dust cup and filter in place.
24. **DO NOT** use if airflow is restricted; if the air paths become blocked, turn off the vacuum cleaner. Clear all obstructions and power on again.
25. Keep nozzle away from hair, face, fingers, uncovered feet, or loose clothing.
26. Only use manufacturer's recommended attachments.
27. **DO NOT** charge at temperatures below 50°F (10°C) or above 104°F (40°C). Charging improperly or at temperatures outside of the specified range may damage the battery and increase the risk of fire.
28. Store the appliance indoors. **DO NOT** use or store it below 37.4°F (3°C). Ensure the appliance is at room temperature before operating.

DUST CUP/FILTERS/ACCESSORIES

Before turning on the vacuum:

29. Make sure filter is thoroughly dry after routine cleaning.
30. Make sure dust cup and filter are in place after routine maintenance.
31. Make sure accessories are free of blockages and keep openings away from face and body.
32. Use only Shark® brand filters and accessories. Using other brands will void warranty.

GENERAL CLEANING

33. **DO NOT** vacuum up hard or sharp objects such as glass, nails, screws, or coins that could damage the vacuum cleaner.
34. **DO NOT** vacuum up drywall dust, fireplace ash, or embers.
35. **DO NOT** use as an attachment to power tools for dust collection.
36. **DO NOT** vacuum up smoking or burning objects such as hot coals, cigarette butts, or matches.
37. **DO NOT** vacuum up flammable or combustible materials (e.g., lighter fluid, gasoline, or kerosene) or use vacuum in areas where they may be present.
38. **DO NOT** vacuum up toxic solutions (e.g., chlorine bleach, ammonia, or drain cleaner).
39. **DO NOT** use in an enclosed space where vapors are present from paint, paint thinner, moth-proofing substances, flammable dust, or other explosive or toxic materials.
40. **DO NOT** immerse vacuum cleaner in water or other liquids.
41. Use extra care when cleaning on stairs.

LITHIUM-ION BATTERY

42. The battery is the power source for the appliance. **DO NOT** carry the appliance with your finger on the power button. **DO NOT** charge appliance with the power on.
43. Use only the included charging dock to charge. Use of incorrect charger may create a risk of fire.
44. Use appliance only with included lithium-ion battery. Use of any other battery may create a risk of injury and fire.
45. Under abusive conditions, liquid may be ejected from the battery. Avoid contact with liquid, as it may cause irritation or burns. If contact occurs, flush with water. If liquid contacts eyes, seek medical help.
46. Store the appliance indoors. To maintain battery life, **DO NOT** use or store battery at temperatures below 37.4°F (3°C) or above 104°F (40°C).
47. **DO NOT** expose appliance to fire or temperature above 266°F (130°C) as it may cause explosion.
48. There are **NO** serviceable parts. To ensure safety, **DO NOT** modify or attempt to repair the appliance.

WHAT'S INSIDE

- A Shark Wandvac™ Handheld
- B Duster Crevice Tool
- C Multi-Surface Pet Tool
- D ION Charging Stand
- E ION Charging Base
- F Accessory Storage Tray

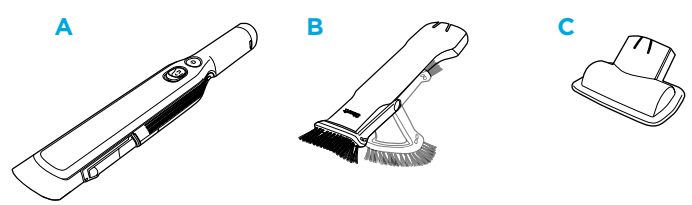

ION CHARGING STAND ASSEMBLY

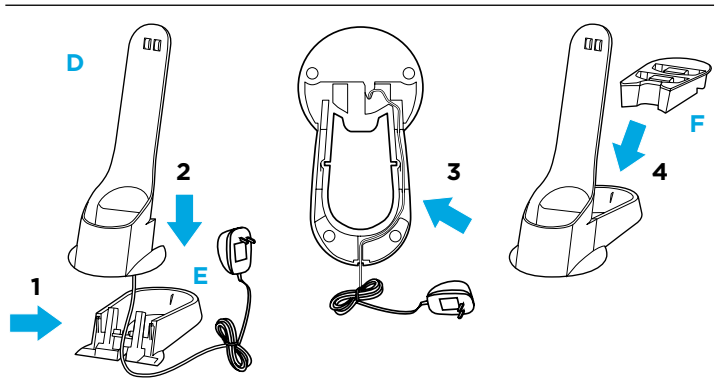

1. Align the holes in the bottom of the **ION Charging Stand** with the posts on the front of the **Charging Base**. Run the **Charger Cord** between the posts.
2. With the cord in place, slide the stand down until it clicks securely into place on the base.
3. Route the cord through the groove in the bottom of the base and out the indent in the back.
4. Insert the **Accessory Storage Tray** into the opening behind the charging stand.

CHARGING THE BATTERY

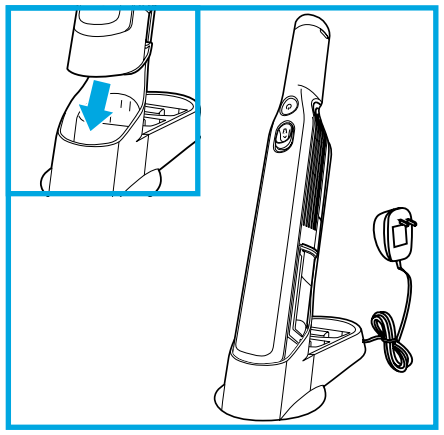

Prior to first use, the lithium-ion battery must be charged completely, even if it comes with a partial charge.

Place the Shark Wandvac™ Handheld onto the Wandvac Charging Dock with the nozzle in the cradle.

Plug the charging dock into a wall outlet.

In Use

Solid blue

Low Battery

Blinking

Charging

Fades in and out

Charged

Dim

NOTE: During first use, run the battery all the way down to properly condition it, then charge fully. It takes approximately 2.5 hours to charge battery completely.

USING YOUR SHARK WANDVAC™ HANDHELD

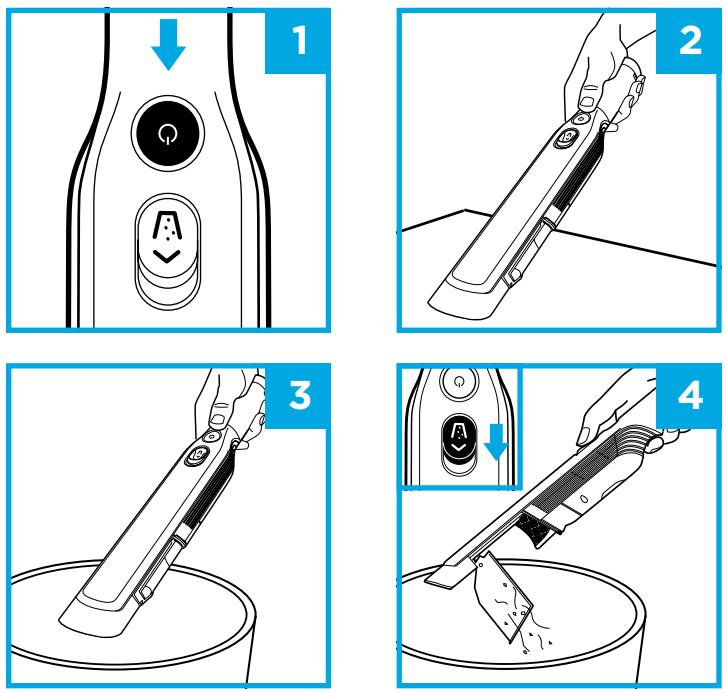

1. Press Power button.
2. Run the nozzle over the surface to be cleaned.
3. To empty the dust cup, hold your ION Handheld over the trash.
4. Slide dust cup button forward to release debris.

NOTE: For maintenance, see reverse side.

MAINTENANCE

EMPTYING THE DUST CUP

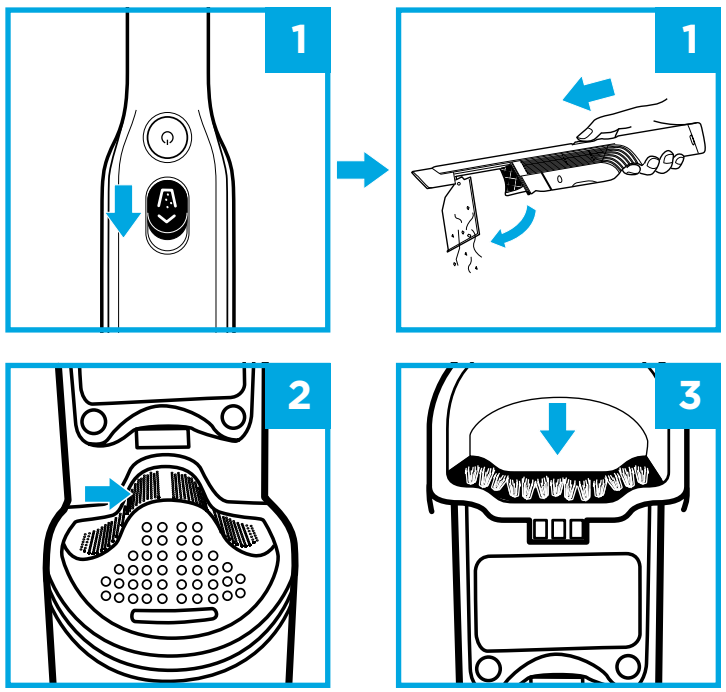

1. With the power off, slide the Open Dust Cup button forward, and the dust cup will swing open.
2. Tap dust cup filter screen lightly to knock off dust and debris.
3. Wipe dust cup bristle lightly with dry cloth to remove dust and dirt.

MAINTENANCE

CLEANING THE FILTER

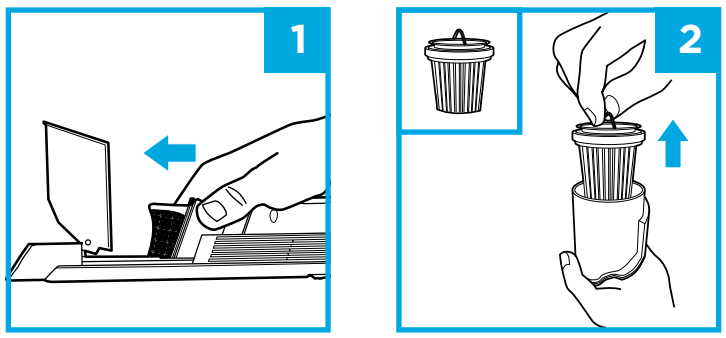

1. With the dust cup open and the power off, pinch both sides of the filter housing and slide it forward to remove.
2. Hold the housing over a trash receptacle. Lift the fabric filter by the metal ring to remove it from the housing.

To clean the fabric filter, tap to remove dust and large particles. For deeper cleaning, hand-wash the filter with water only and let it air-dry for 24 hours before reinstalling.

To clean the filter housing, make sure filter is removed, then hand-wash with water only.

TROUBLESHOOTING AND ERROR CODES

LIGHT INDICATOR	WHAT IT MEANS
Light blinking blue	Low battery.
Light blinks blue twice, then pauses	Blockage. Turn off power and remove blockage, then turn power back on.
Solid blue light	Power is on.
Blue light fades in and out steadily	Unit is charging.
Dim blue light	Unit is fully charged.
No light	Power is off, or unit needs to recharge.

ONE (1) YEAR LIMITED REPLACEMENT WARRANTY

For guarantee claims, you will need to submit a proof of purchase in the form of a valid receipt that displays date and place of purchase. This warranty does not replace but is in addition to your statutory rights.

If your product becomes defective due to faulty material or workmanship within a period of 1 year from the date of purchase, we warrant to do the following:

- For New Zealand Consumers: We will replace the defective/faulty part with a new product, free of charge, or if the unit is deemed defective/faulty we replace the unit with an equivalent or upgraded model, at our discretion.
- For Australian Consumers: Our goods come with guarantees that cannot be excluded under the Australian Consumer Law. You are entitled to a replacement or refund for a major failure and for compensation for any other reasonably foreseeable loss or damage. You are also entitled to have the goods repaired or replaced if the goods fail to be of acceptable quality and the failure does not amount to a major failure.

Replacement items will be covered by the limited warranty for the balance of the warranty period from the date of the original purchase.

Your warranty is subject to the following conditions

- DO NOT operate the appliance with a damaged plug or cord, or if the unit has been dropped, damaged or dropped in water.
- To avoid the risk of electric shock, do not disassemble or attempt to repair the appliance on your own. If the supply cord is damaged, it must be replaced by a qualified electrician to avoid a hazard. Incorrect re-assembly or repair can cause a risk of electric shock or injury to persons when the appliance is used.
- The item has not been misused, abused, neglected, altered, modified or repaired by anyone.
- The item has been subjected to fair wear and tear.
- The item has not been used for trade, professional or hire purposes.
- The item has not sustained damage through foreign objects, substances or accident

Customer costs within warranty

The customer is responsible for any inwards freight charge to return a product for warranty if requested, and outward freight charge for warranty parts and or replacement unit.

Who is covered?

This warranty applies only to the original purchaser, who bought the product from an authorised retailer and may not be transferred. Proof of purchase is required.

What is not covered?

- Filters and brush rolls
- Accessories supplied with the item.
- Components that are subject to natural wear and tear caused by normal use in accordance with operating instructions.
- Unauthorised/improper maintenance/handling or overload is excluded from this warranty.

CLEANING THE DUST CUP

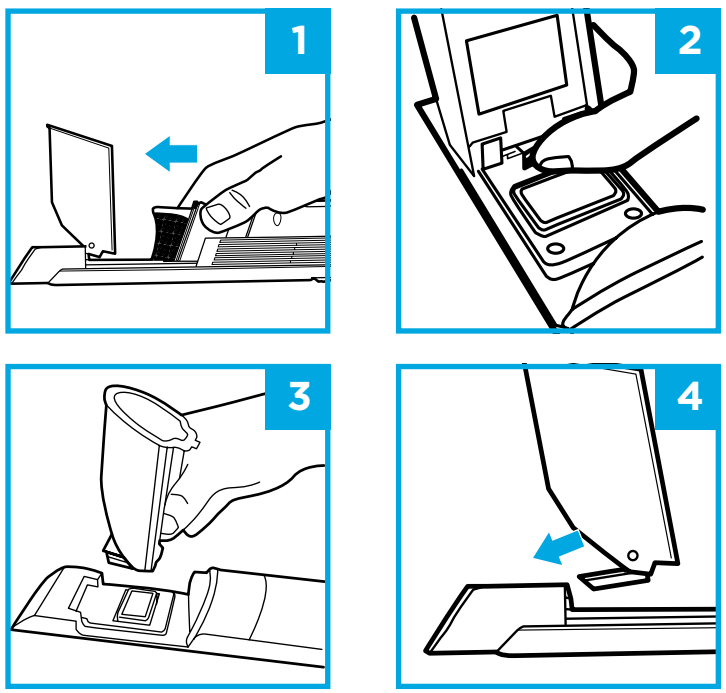

1. With the dust cup open and the power off, pinch both sides of the filter housing and slide it forward to remove.
2. With the dust cup open, press and hold the release tab, and lift off the dust cup.
3. Hand-wash dust cup with soap and water only, and allow parts to air-dry completely before reinstalling.
4. To reinstall, slide the tab on the dust cup into the slot on the bottom of the nozzle until it clicks into place.

Do not wash any parts of this vacuum or its accessories in a dishwasher.

Find all FAQs and additional accessories available for purchase at sharkclean.com.au or sharkclean.co.nz

The Shark Wandvac™ Handheld will not operate.

- The battery needs to be recharged.
- Try using a different electrical outlet to charge.
- The battery is damaged and needs to be replaced.

The Shark Wandvac Handheld will not pick up debris if suction is weak.

- The dust cup is full. Empty the dust cup.
- The fabric filter needs cleaning or replacement. Clean or replace the fabric filter.
- The battery needs to be recharged.
- The filter screen is clogged and needs cleaning. Open dust cup and clean filter screen.

Dust is escaping from the Shark Wandvac Handheld.

- The fabric filter is not installed correctly. Remove filter, then reinstall.
- The fabric filter has a hole or a puncture and needs to be replaced.
- The dust cup is not installed correctly. Remove dust cup, then reinstall.

I dropped my unit and the dust cup fell off.

- To reinstall, slide the tab on the dust cup into the slot on the bottom of the nozzle until it clicks into place.

REGISTER YOUR PURCHASE

AUS sharkclean.com.au
NZ sharkclean.co.nz

TECHNICAL SPECIFICATIONS

Battery Voltage:	10.8V
Motor Watts:	115W
Amps:	10.6A

Shark Wandvac WV203ANZ
Cord-Free
Handheld Vacuum charger
part number: 1076FI200

BATTERY REMOVAL AND DISPOSAL

This product uses a rechargeable and reusable lithium-ion battery. When the battery no longer holds a charge, it should be removed from the hand vacuum and recycled. **DO NOT** incinerate or compost the battery.

LITHIUM-ION BATTERY MUST BE RECYCLED OR DISPOSED OF PROPERLY

RECORD THIS INFORMATION

Model Number: _____

Date of Purchase: _____
(Keep receipt)

Store of Purchase: _____

Mann&Noble

Proudly distributed by:
Mann&Noble Pty Ltd
Building D
33 Quarry Road
Erskine Park
NSW, 2759
Australia

AUS 02 8801 7666
NZ 0800 112 660

AUS sharkclean.com.au
NZ sharkclean.co.nz

Illustrations may differ from actual product. We are constantly striving to improve our products, therefore the specifications contained herein are subject to change without notice. SHARK WANDVAC is a trademark of SharkNinja Operating LLC

© 2021 SharkNinja Operating LLC
PRINTED IN CHINA

WV203ANZ_IB_E_MP_REV_21