Shark®

StainStriker™

HairPro® Pet

OWNER'S GUIDE

PX250 SERIES

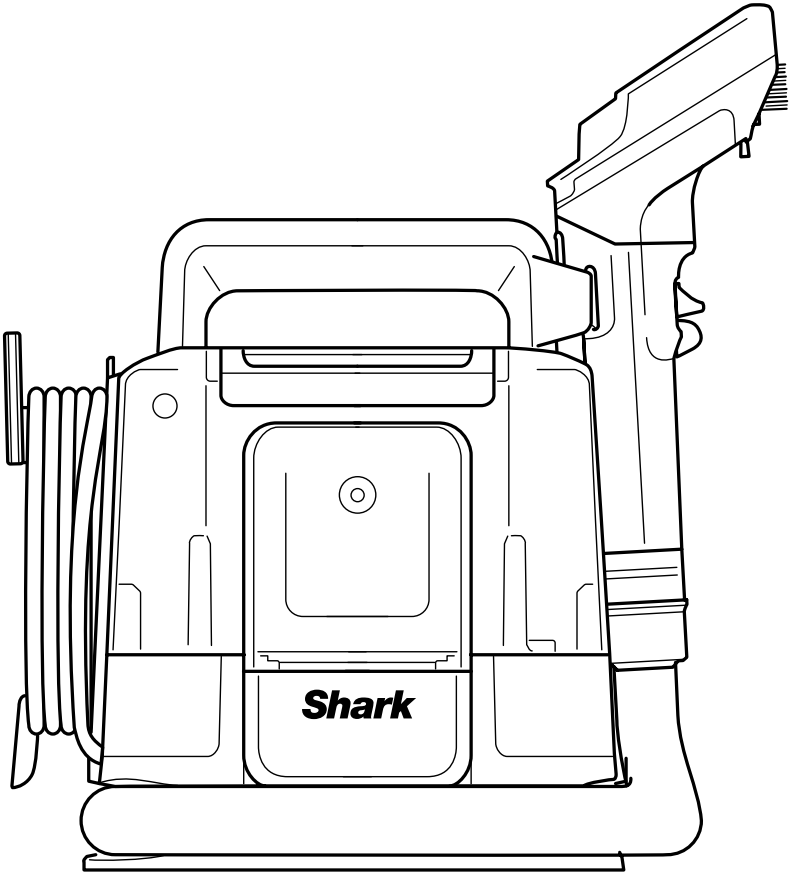

Scan QR to view
HOW-TO VIDEOS
and more.

IMPORTANT SAFETY INSTRUCTIONS – FOR HOUSEHOLD USE ONLY

READ CAREFULLY BEFORE USE – SAVE THESE INSTRUCTIONS. FOR HOUSEHOLD USE ONLY. READ ALL INSTRUCTIONS BEFORE USING THIS SPOT CARPET/UPHOLSTERY CLEANER

⚠ WARNING **REDUCE THE RISK OF FIRE, ELECTRIC SHOCK, INJURY, OR PROPERTY DAMAGE:**

This appliance is not intended for use by persons (including children) with reduced physical, sensory or mental capabilities, or lack of experience and knowledge, unless they have been given supervision or instruction concerning use of the appliance by a person responsible for their safety. Children should be supervised to ensure that they do not play with the appliance.

1. Do not put any object into openings. Do not use with any opening blocked; keep free of dust, lint, hair, and anything that may reduce air flow.
2. **DO NOT** modify the plug provided with the appliance. If the grounded plug does not fit fully into the outlet, reverse the plug. If it still does not fit, contact qualified electrician.
3. **DO NOT** force into outlet or try to modify it.
4. **DO NOT** pull, close door, or wrap around sharp edges or corners on the cord. To unplug, grasp the plug, not the cord. Keep cord away from heated surfaces.
5. To reduce the risk of fire or electric shock due to internal component damage, use ONLY Shark Deep Clean Pet and StainStriker formula in the correct tanks, as intended for use with this appliance. See Instructions below.
6. The areas around where you are cleaning may become wet, use care to avoid slipping and falling.
7. Use care when removing and reattaching the hand tool to the Spot Cleaner to avoid accidental activation of the cleaning solution.
8. **DO NOT** spray solution on your skin or in your eyes.
9. **DO NOT** fill solution tanks while installed on the appliance. Remove before filling.
10. **DO NOT** operate if there is any wetting of the exterior surfaces of the appliance. If the appliance is wet, dry with a cloth before use.
11. To reduce the risk of shock and unintended operation, turn off and unplug Spot Cleaner before any adjustment, cleaning, maintenance, or troubleshooting.
12. Before each use, carefully inspect each part for damage or wear. If a part is damaged or worn out, immediately discontinue use. **DO NOT** use if any part is damaged or if Spot Cleaner is not working as it should, has been dropped, left outdoors, or dropped into water.
13. **DO NOT** immerse or spray water on the body of the Spot Cleaner. To clean the surface, wipe with a dry cloth.
14. **DO NOT** allow to be used by children or as a toy. Close supervision is necessary when used near children.
15. **DO NOT** handle plug or Spot Cleaner with wet hands.
16. **DO NOT** use without the dirty water tank, clean solution tank, or filter in place.
17. Use only identical Shark® replacement parts. Only use Shark® branded filters and accessories.
18. If plugging unit into extension cord, ensure cord is no more than 15m to prevent damage to the motor.
19. **DO NOT** place Spot Cleaner on uneven surfaces.
20. **DO NOT** use to pick up:
    a) Large objects
    b) Hard or sharp objects (glass, nails, screws, or coins)
    c) Large quantities of dust (e.g., drywall dust).
    d) Smoking or burning objects (hot coals, cigarette butts, or matches)
    e) Flammable or combustible materials (lighter fluid, gasoline, or kerosene)
    f) Toxic materials (chlorine bleach, ammonia, or drain cleaner)
21. **DO NOT** use in the following areas:
    a) Poorly lit areas
    b) Outdoor areas
    c) Spaces that are enclosed and may contain explosive or toxic fumes or vapors (lighter fluid, gasoline, kerosene, paint, paint thinners, mothproofing substances, or flammable dust).

    DO NOT: Engage spray trigger unless pointing at the affected area. WARNING: May still spray when the unit is powered off.
22. Do not leave appliance when plugged in. Unplug from outlet when not in use and before servicing.
23. Keep hair, loose clothing, fingers, and all parts of the body away from openings and moving parts.
24. Use extra care when cleaning on stairs.
25. **GROUNDING INSTRUCTIONS:** This appliance must be grounded. If it should malfunction or break down, grounding provides a path of least resistance for electric current to reduce the risk of electric shock. This appliance's cord has an equipment-grounding conductor and a grounding attachment plug. This appliance is for use on a nominal 120V circuit. Make sure that the appliance is connected to an outlet with the same configuration as the plug that is properly installed and grounded in accordance with all local codes and ordinances. No adapter should be used with this appliance.

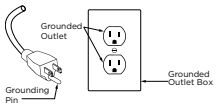

AA200

26. Do not store unit where temperatures reach freezing levels to avoid damaging internal parts.
27. **FIRST AID** keep out of reach of children. Causes skin and serious eye irritation. If in eyes, rinse continuously with water for minutes. Remove contact lenses if present and easy to do so. Continue rinsing. If on skin, wash with soap and water. If skin and eye irritation persists, seek medical attention.
28. Please recycle container. Dispose of contents/container with licensed waste disposal site in accordance with the requirements of the local waste disposal authority. Do not dispose in drains or watercourses in concentrate form.

SAVE THESE INSTRUCTIONS

PARTS

- A Power Button
- B CarpetXpert™ Tank
- C Rinse & Go™ Self-Wash Cycle
- D StainStriker Tank
- E Dirty Water tank
- F Hair Filter
- G Mini Stain Eliminator
- H Suction Inlet
- I Spray Outlet
- J Spray Trigger
- K Detach Button
- L (3.5”) Stain Eliminator
- M Bristles/Hair-Gripping Fins
- N Pet Hair Extractor Tool
- O (7”) Stain Eliminator Tool
- P Pet Mess Extractor Tool
- Q 6oz. Deep Clean Pet Formula
- R 12oz. OXY Multiplier Formula

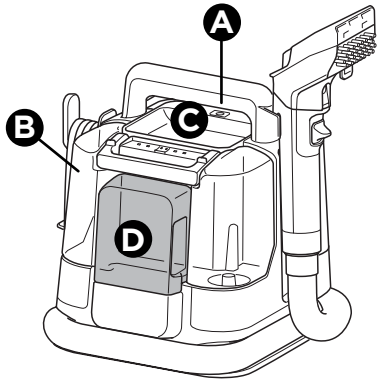

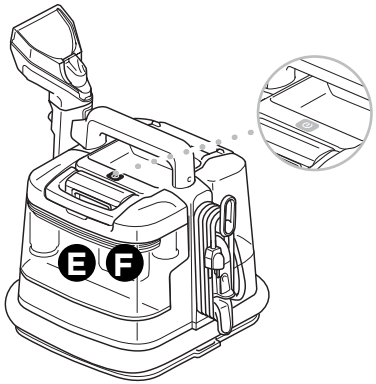

NOTE: *Not all accessories come with all units. Tools may vary by model.
For additional accessories available, please visit sharkclean.com

GETTING STARTED

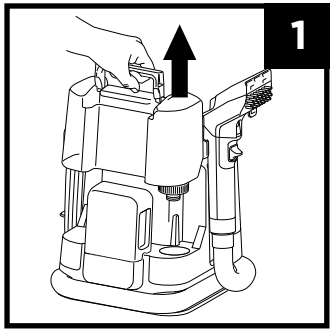

1. Lift the CarpetXpert™ Tank off the unit. Turn the tank over, unscrew the cap, and remove it.

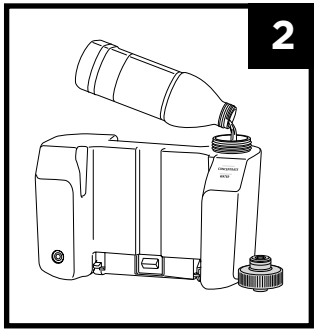

2. Add water to the CarpetXpert™ Tank up to the WATER fill line. Then add Deep Clean Pet formula to the CONCENTRATE fill line. **IMPORTANT**: Never use very hot water, even from the faucet. Never use boiling water. Never use microwaved water. Warm water is okay.

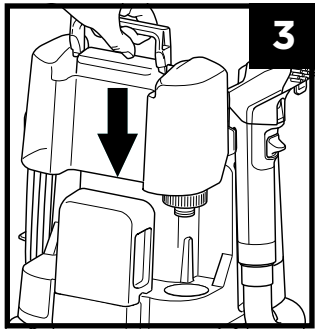

3. Replace the cap, then reinstall the tank until it clicks into place.

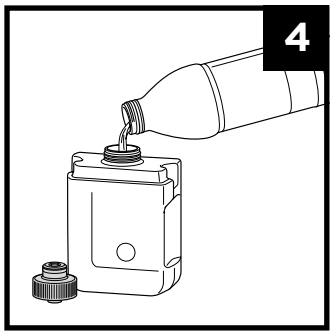

4. Detach the StainStriker™ tank from the unit and turn over. Unscrew the cap and pour the OXY Multiplier formula into the tank.

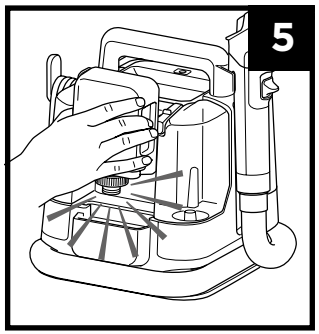

5. Replace the cap and reinstall the tank until it clicks into place.

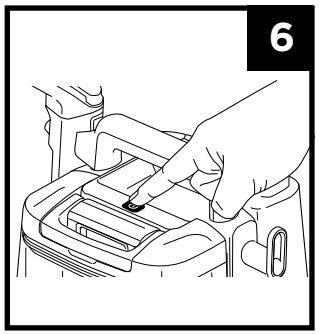

6. Unwrap the power cable and plug into a power socket. Turn **ON** unit to begin cleaning.

TIP: Before first use, remove the dirty water tank then reinstall it, making sure it is securely in place and the seal is properly fitted.

IMPORTANT: Clean with a traditional vacuum cleaner first before using StainStriker.
Use **ONLY** Shark branded cleaning solutions: Deep Clean Pet and OXY Multiplier.

WET STAIN CLEANING

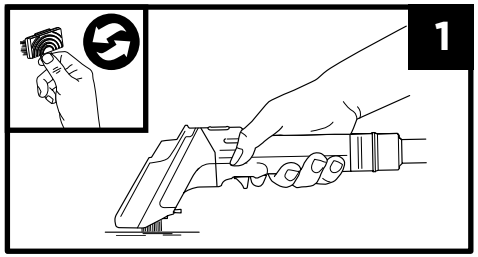

1. Follow the Stain Guide on the Stain Tool Handle. Press the power button to turn on the unit. Spray the stain area, then scrub it with the tool. Tilt the tool forward and drag it across the stain to extract liquid. Repeat if needed. To avoid longer dry times, do not overspray.

CLEANING TIPS:

- For older and tougher stains, allow up to 5 minutes for the cleaning solution to penetrate deeper into the stain.
- If a difficult stain was not fully removed, wait 24 hrs, and try a 2nd pass. With extremely difficult stains, this might be needed.
- Fresh stains can be cleaned immediately after spraying.
- Always agitate the area thoroughly to break up the stain. Brush in multiple directions for best results.

For information, scan QR to view **HOW-TO VIDEOS**.

DRY STAIN CLEANING

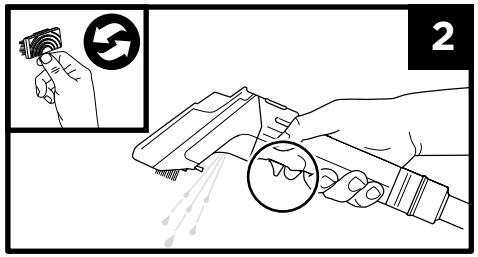

2. Follow the Stain Guide on the stain tool. Press the power button to turn on the unit. Scrub the stain area with the tool bristles, then spray the stain and scrub again. Tilt the tool forward and drag it across the stain to extract liquid. Repeat if needed. To avoid longer dry times, do not overspray.

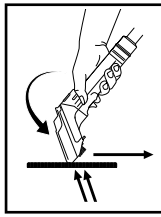

DRY TIME TIPS:

• Do not overspray, especially on furniture and upholstery. Overspraying may cause fluid to be absorbed deep into cushions and upholstery.

• For the most effective suction, tilt the handle forward, apply pressure, then drag the tool backward. Repeat until little to no fluid is being sucked into the window on the tool.

MAINTENANCE

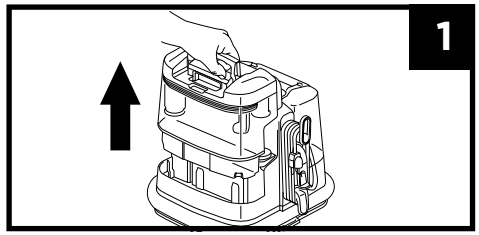

1. Detach the dirty water tank, making sure to keep it upright. Set the tank down on a level surface. Push the handle all the way back until it clicks, then lift off the lid.

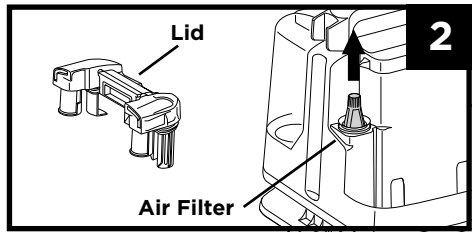

2. Clean and rinse off the underside of the lid. Remove cone shaped Air Filter by pulling it up, and rinse off any debris.

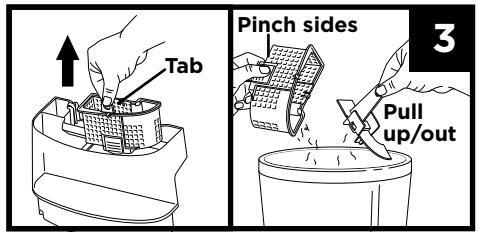

3. To remove hair from the hair filter, take the filter out of the dirty water tank by pulling the tab directly up. Hold the filter over the trash, then pinch the bottom sides of the filter basket and pull out the tab. Tap the hair out into the trash.

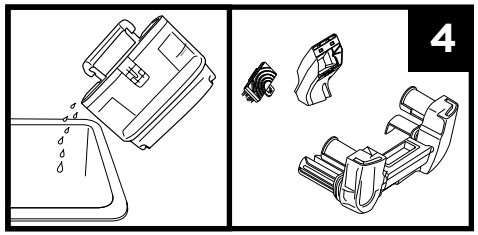

4. Pour debris and liquid out of the dirty water tank into a sink or drain. Rinse tank thoroughly with soap and water. Clean debris off the hand tools, bristles, and float valve thoroughly using soap and water. Allow all parts to air-dry completely before reinstalling.

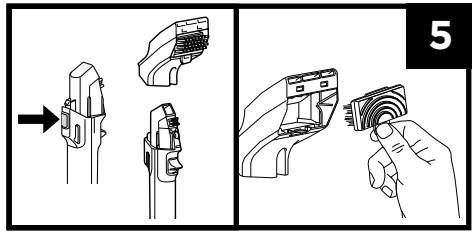

5. Detach the stain tool by pressing the release button. Remove the cover from the tool to clean the air path. Wash the bristles on the tool thoroughly.

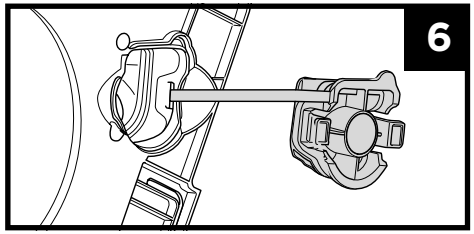

6. To clear any clogged debris, remove the connecting clip on the bottom of the unit. Pinch the sides of the clip, then pull it out.
Important: Be sure to securely replace the cover on the tool to prevent leaking.

NOTE: Clean unit after every use to avoid odors, bacteria, and mold.

RINSE & GO™ SELF-WASH CYCLE

USING RINSE & GO WITH HAND TOOLS

Rinse & Go can be used with the Mini Stain Eliminator and the 3.5” Stain Eliminator. To clean the interior of these tools and the hose:

1. Turn on power (for suction).
2. Insert the tip of the hand tool into the Rinse & Go groove on top of the CarpetXpert tank. Press the tool down onto the button to suction up cleaning solution **(fig. 1, fig. 2)**.
3. Tilt tool back and forth for optimal liquid flow **(fig. 3)**.
4. After cleaning is complete, lift hose up for 3 seconds until fully clear to prevent liquid leaking out of the hose.
5. Continue cleaning, or turn off power if you are finished cleaning.

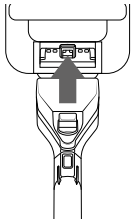

fig. 1

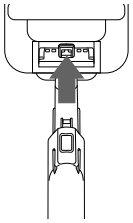

fig. 2

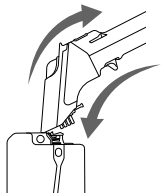

fig. 3

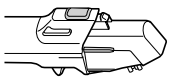

Mini Stain Eliminator

3.5” Stain Eliminator

TIP: If fluid is not going into the crevice tool, angle the tool forward to create a better seal.

TIP: If hose if not fully clean, gently shake it back-and-forth while using Rinse & Go.

CLEANING FORMULAS

Shark Deep Clean Pet
Deep carpet cleaning Pet formula for removing dirt & grime.

Shark OXY Multiplier
Tough stain-eliminating formula for stubborn stains & odors.

Scan the QR code to order refills.

TECHNICAL SPECIFICATIONS

PX250 Series: 120V, 60Hz, 3.3A
RECORD THIS INFORMATION

Model Number: _____

Date of Purchase: _____
(Keep receipt)

Store of Purchase: _____

MINI STAIN ELIMINATOR

✔ Difficult Stains
✔ Hair Pickup
✔ Use with Solution (wet)
✔ Rinse & Go

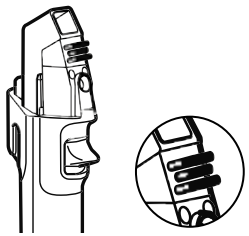

TIPS:

- Rubber nubs avoid tangles, are easy to wash off, and are intended for softer fabrics.
- Bristles are intended for deeper stain cleaning.
- Your unit will come with 1 bristle insert installed on the tool, and 1 rubber insert in the box.

MAINTENANCE:

- After each use, use the Rinse & Go™ Self-Wash Cycle to rinse out the hose and the crevice tool.

(3.5”) STAIN ELIMINATOR

✔ Difficult Stains
✔ Light Hair Pickup
✔ Use with Solution (wet)
✔ Rinse & Go

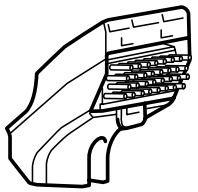

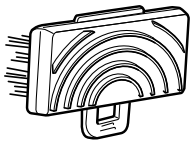

TIPS:

- Use hair-gripping fins on delicate surfaces and on hairy surfaces to prevent tangling.
- Bristles are intended for deeper stain cleaning.
- When removing hair, use shorter strokes to avoid clumps. Remove hair as soon as it appears. Do not let it accumulate.
- To remove large amounts of hair, use the Pet Hair Tool.

MAINTENANCE:

- After each use, clean the hose with the Rinse & Go Self-Wash Cycle.
- Remove the window and reversible bristles from the stain tool and wash them.
- Allow all parts to air-dry before storing.

(7”) STAIN ELIMINATOR (Select Models)

✔ Larger Area Stains
✔ Light Hair Pickup
✔ Use with Solution (wet)

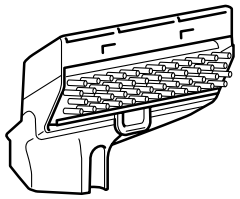

TIPS:

- Similar to Stain Eliminator, but twice as wide.
- Intended for larger jobs including sofas, stairs, and large stains.

MAINTENANCE:

- After each use, remove the hand tool and clean the hose using the Rinse & Go Self-Wash Cycle.
- Remove window and bristles to wash them.
- Allow all parts to air-dry before storing.

HAND TOOLS: USAGE, TIPS, AND MAINTENANCE

PET HAIR EXTRACTOR TOOL

✔ Surface Stains
✔ Heavy Hair Pickup
✔ Use Dry or with Solution (wet)

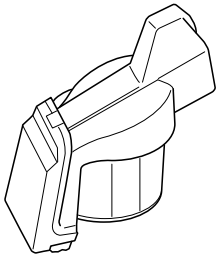

TIPS:

- Use a back-and-forth scrubbing motion in short strokes to pull up hair or break down a stain.
- When removing a large amount of hair, use shorter strokes to avoid clumps. Remove hair as soon as it appears.
- To maintain suction power, make sure to regularly dispose of the liquid from the cup, and remove any debris in the filter by rinsing it out.
- To prevent clogs, do not empty the cup into toilets or drains.

MAINTENANCE:

- After each use, remove the hand tool and clean the hose using the Rinse & Go Self-Wash Cycle.
- Remove the cup and filter from the tool by rotating each toward the unlock icon on the side of the tool.
- Empty debris from the cup into the trash, and rinse filter.
- Remove the window and filter from the tool and wash them.
- Air-dry all parts before storing.

PET MESS EXTRACTOR TOOL (select models)

✔ Unhygienic Wet Pet Messes
✔ Use with Solution (wet)

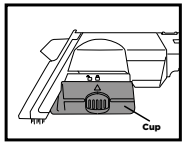

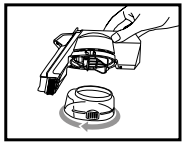

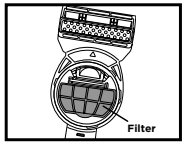

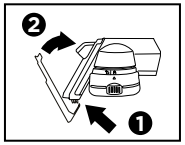

TIPS:

- Not designed for solid messes or sucking up hair.
- Spray the mess with solution, and use short back-and-forth strokes with the tool to scrub the mess and suction up the solution.
- Make sure to keep the tool level, without tipping, to prevent dirty liquid from entering the hose and unit interior.
- Periodically dump out the dirty liquid from the cup in the tool to maintain suction power.
- DO NOT exceed the MAX FILL LINE on the pet tool cup or pet mess will enter hose and the unit’s interior.

MAINTENANCE:

- If hair is found on the rubber nubs, hold the tool over the trash, remove the window, and tap off the hair.
- To reattach window: **(1)** toe-in to the front/bottom of tool, and **(2)** rotate into the rubber nubs so the nubs enter the holes, and the window clicks into position. **(see fig 1)**
- Remove the cup and empty liquid messes into a toilet or drain.
- Clean any debris off the filter.
- Wash parts with soap and water, and allow them to air-dry before storing.

TROUBLESHOOTING

Problem	Solution
Inconsistent spray or no spray	Ensure there is cleaning solution in both solution tanks. Make sure the CarpetXpert™ Tank is installed correctly. Make sure the unit is plugged in and the power is on.
Low suction or no suction	Make sure the dirty water tank is not overfilled and is installed correctly. Check the clog access point underneath the unit and clear any debris trapped inside at the end of the hose. Make sure hand tools are connected correctly. Remove any debris from the cleaning attachments. Make sure the clog access door is in place and tightly sealed. See #6 in Maintenance section.
Unit not turning on	Make sure the unit is plugged in completely. Try a different socket. Ensure On/Off button was pressed.
Liquid leaking from unit	The dirty water tank may be overfilled. Make sure the dirty water tank and the CarpetXpert™ Tank are both installed correctly. Make sure the float valve in the dirty water tank is not stuck. Make sure the unit is on a stable, flat surface. Make sure the clog access door is in place and tightly sealed. See #6 in Maintenance section.
Solution tanks leaking	Make sure the caps on the solution tanks are tightened fully. Make sure both tanks are installed correctly and the caps have clicked into place.

THREE (3) YEAR LIMITED WARRANTY

The Three (3) Year Limited Warranty applies to purchases made from authorized retailers of **SharkNinja Operating LLC.** Warranty coverage applies to the original owner and to the original product only and is not transferable.

SharkNinja warrants that the unit shall be free from defects in material and workmanship for a period of three (3) years from the date of purchase when it is used under normal household conditions and maintained according to the requirements outlined in the Owner's Guide, subject to the following conditions and exclusions:

What is covered by this warranty?

1. The original unit and/or non-wearable parts deemed defective, in SharkNinja's sole discretion, will be repaired or replaced up to three (3) years from the original purchase date.
2. In the event a replacement unit is issued, the warranty coverage ends six (6) months following the receipt date of the replacement unit or the remainder of the existing warranty, whichever is later. SharkNinja reserves the right to replace the unit with one of equal or greater value.

What is not covered by this warranty?

1. Normal wear and tear of wearable parts which require regular maintenance and/or replacement to ensure the proper functioning of your unit, are not covered by this warranty. Replacement parts are available for purchase at **sharkaccessories.com**.
2. Any unit that has been tampered with or used for commercial purposes.
3. Damage caused by misuse, abuse, negligent handling, failure to perform required maintenance (e.g., not cleaning the filters or not removing debris from the hand tool or hose), or damage due to mishandling in transit.
4. Consequential and incidental damages.
5. Defects caused by repair persons not authorized by SharkNinja. These defects include damages caused in the process of shipping, altering, or repairing the SharkNinja product (or any of its parts) when the repair is performed by a repair person not authorized by SharkNinja.
6. Products purchased, used, or operated outside North America.

How to get service

If your appliance fails to operate properly while in use under normal household conditions within the warranty period, visit **sharkaccessories.com** for product care and maintenance self-help. Our Customer Service Specialists are also available at **1-800-798-7398** to assist with product support and warranty service options, including the possibility of upgrading to our VIP warranty service options for select product categories. So we may better assist you, please register your product online at registeryourshark.com and have the product on hand when you call.

SharkNinja will cover the cost for the customer to send in the unit to us for repair or replacement. A fee of $25.95 (subject to change) will be charged when SharkNinja ships the repaired or replacement unit.

How to initiate a warranty claim

You must call **1-800-798-7398** to initiate a warranty claim. You will need the receipt as proof of purchase. We also ask that you register your product online at **registeryourshark.com** and have the product on hand when you call, so we may better assist you. A Customer Service Specialist will provide you with return and packing instruction information

How state law applies

This warranty gives you specific legal rights, and you also may have other rights that vary from state to state. Some states do not permit the exclusion or limitation of incidental or consequential damages, so the above may not apply to you.

NOTES

NOTES

sharkclean.com

PLEASE READ CAREFULLY AND KEEP FOR FUTURE REFERENCE.

This Owner's Guide is designed to help you get a complete understanding of your new Shark® StainStriker™ HairPro® Pet.

SharkNinja Operating LLC
US: Needham, MA 02494
CAN: Ville St-Laurent, QC H4S 1A7

1-800-798-7398
sharkclean.com

Illustrations may differ from actual product. We are constantly striving to improve our products, therefore the specifications contained herein are subject to change without notice.

This product may be covered by one or more U.S. patents. See sharkninja.com/patents for more information.

©2024 SharkNinja Operating LLC. HAIRPRO and SHARK are registered trademarks of SharkNinja Operating LLC. STAINSTRIKER is a trademark of SharkNinja Operating LLC.

PX250_IB_A5_MP_Mv10

@sharkcleaning