Shark®

POWERDETECT™ Upright Vacuum with Detect Technology, DuoClean Detect™, Powered Lift-Away®, Self-Cleaning Brushroll, and Odor Neutralizer Technology

AZ4000 Series

OWNER'S GUIDE

IMPORTANT SAFETY INSTRUCTIONS

FOR HOUSEHOLD USE ONLY

⚠ WARNING

To reduce the risk of fire, electric shock, injury, or property damage, when using an electrical appliance, basic precautions should always be followed, including the following:

READ ALL INSTRUCTIONS BEFORE USING THIS VACUUM

1. Inspect power cord and plug for any damage before use. **DO NOT** use vacuum cleaner with a damaged cord or plug. Turn off all controls before plugging in or unplugging the vacuum cleaner. Store your vacuum cleaner with the power cord secured around the two cord hooks. To minimize the risk of power cord damage, do not allow the motorized brush roll to ingest the cord. If this occurs, immediately shut off power to the vacuum and remove the cord.
2. This appliance has a polarized plug. If the plug does not fit fully into the outlet, reverse the plug (one blade is wider than the other). If it still does not fit, contact a qualified electrician. **DO NOT** force into outlet or try to modify to fit.
3. Your vacuum cleaner may consist of a motorized nozzle, wand, hose, and/or vacuum pod. This device contains electrical connections, electrical wiring, and moving parts that potentially present risk to the user. The hose contains electrical wires. Do not use when damaged, cut, or punctured.
4. Use only identical replacement parts.
5. Carefully observe and follow the instructions provided below to avoid improper use of the appliance. **DO NOT** use the vacuum for any purpose other than those described in this manual.
6. Before use, carefully inspect all parts for any damage. **DO NOT** use if any parts are damaged.
7. The use of an extension cord is **NOT** recommended.
8. This vacuum cleaner contains no serviceable parts.
9. This appliance can be used by persons with reduced physical, sensory, or mental capabilities or lack of experience and knowledge if they have been given supervision or instruction concerning use of the appliance in a safe way and understand the hazards involved. Cleaning and user maintenance shall not be made by children. Keep the appliance and its cord out of reach of children. **DO NOT** allow the appliance to be used by children. **DO NOT** allow to be used as a toy. Close supervision is necessary when used near children.
10. Always turn off the vacuum cleaner before connecting or disconnecting any motorized nozzles, hose, or other accessories.
11. **DO NOT** handle plug or vacuum cleaner with wet hands.
12. **DO NOT** use without filters in place.
13. Only use Shark® branded filters and accessories.
14. **DO NOT** damage the power cord:
    - **a)** **DO NOT** pull or carry vacuum cleaner by the cord or use the cord as a handle.
    - **b)** **DO NOT** unplug by pulling on cord. Grasp the plug, not the cord.
    - **c)** **DO NOT** run the vacuum cleaner over the power cord, close a door on the cord, pull the cord around sharp corners, or leave the cord near heated surfaces.
15. **DO NOT** put any objects into nozzle or accessory openings. **DO NOT** use with any opening blocked; keep free of dust, lint, hair, and anything that may reduce airflow.
16. **DO NOT** use if nozzle or accessory airflow is restricted. If the air paths or the motorized floor nozzle become blocked, turn the vacuum cleaner off and unplug from electrical outlet. Remove all obstructions before you plug in and turn on the unit again.
17. Keep nozzle and all vacuum openings away from hair, face, fingers, uncovered feet, or loose clothing.
18. **DO NOT** use if vacuum cleaner is not working as it should, or has been dropped, damaged, left outdoors, or dropped into water.
19. Use extra care when cleaning on stairs.
20. **DO NOT** leave the vacuum cleaner unattended while plugged in.
21. When powered on, keep the vacuum cleaner moving over the carpet surface at all times to avoid damaging the carpet fibers.
22. **DO NOT** place vacuum cleaner on unstable surfaces such as chairs or tables.
23. Your Shark® vacuum may not be designed to stand up on its own. When taking a break from cleaning, you may need to lean it against furniture or a wall, or lay it flat on the floor. Using the vacuum for an application where the unit lacks stability may result in personal injury.
24. **DO NOT** use to pick up:
    - **a)** Liquids.
    - **b)** Large objects.
    - **c)** Hard or sharp objects (glass, nails, screws, or coins).
    - **d)** Large quantities of dust (drywall dust, fireplace ash, or embers). **DO NOT** use as an attachment to power tools for dust collection.
    - **e)** Smoking or burning objects (hot coals, cigarette butts, or matches).
    - **f)** Flammable or combustible materials (lighter fluid, gasoline, or kerosene).
    - **g)** Toxic materials (chlorine bleach, ammonia, or drain cleaner).
25. **DO NOT** use in the following areas:
    - **a)** Poorly lit areas.
    - **b)** Wet or damp surfaces.
    - **c)** Outdoor areas.
    - **d)** Spaces that are enclosed and may contain explosive or toxic fumes or vapors (lighter fluid, gasoline, kerosene, paint, paint thinners, mothproofing substances, or flammable dust).
26. Turn off all controls before plugging in or unplugging the vacuum.
27. Observe the following when interacting with the Odor Neutralizer Technology cartridge:
    - **a)** **DO NOT** attempt to disassemble Odor Neutralizer Technology cartridge.
    - **b)** Avoid direct contact with the fragrance pod in the cartridge.
    - **c)** **DO NOT** directly inhale from the Odor Neutralizer Technology cartridge.
    - **d)** Keep away from children and pets.
    - **e)** Keep away from heat, sparks, and open flame.
    - **f)** **DO NOT** place in direct sunlight.

    FRAGRANCE CARTRIDGE FIRST AID
    - **a)** Avoid contact with fabrics and finished surfaces.
    - **b)** Eye contact: Remove contact lenses if present. Rinse continuously with water for several minutes.
    - **c)** Skin contact: Wash hands thoroughly after handling. If irritation or rash develops, seek medical advice/attention.
    - **d)** Inhalation: Move person to fresh air if they are experiencing any respiratory symptoms. If symptoms persist, seek medical advice/attention.
    - **e)** Ingestion: **DO NOT** induce vomiting. Seek medical advice/attention.
28. Unplug from electrical outlet when not in use and before any maintenance or cleaning.
29. Hand wash with water only. Washing with cleaning chemicals could damage the unit.
30. During cleaning or routine maintenance, **DO NOT** cut anything other than hair, fibers, or string wrapped around the brushroll.
31. Allow all filters to air-dry completely before replacing in the vacuum to prevent liquid from being drawn into electric parts.
32. Make sure the dust cup and all filters are in place after routine maintenance.
33. If provided, secure the power cord around the two cord hooks during storage.

SAVE THESE INSTRUCTIONS

sharkclean.com

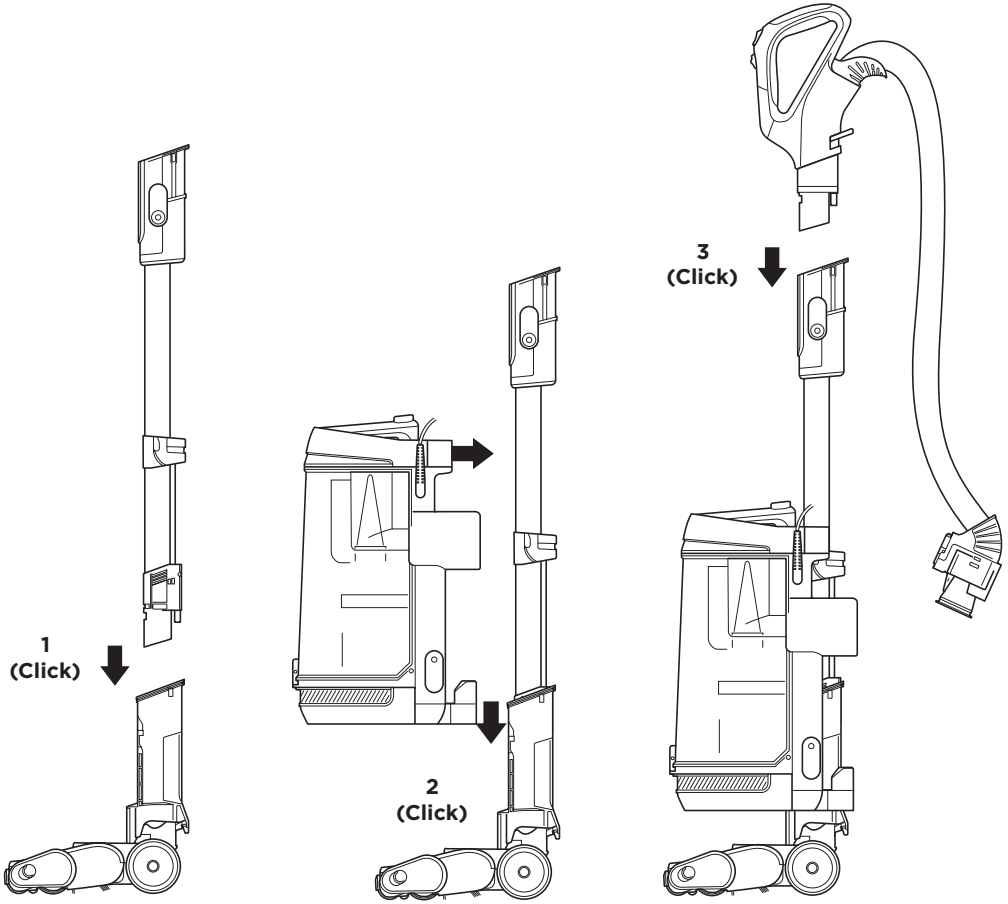

1. Place motorized **Nozzle** on floor and insert **Wand**, pressing it in until it clicks securely into place.
2. Place **Pod** onto wand and slide down to connect.
3. Insert **Handle** into wand, pressing it in until it clicks securely into place.
4. Connect **Hose** to back of pod, pressing it in until it clicks securely into place.
5. Store included accessories on the **Accessory Posts** on the pod.
6. Remove **Odor Neutralizer Technology Dial** from bag. Flip up the dial handle, align the teal arrows, then insert the dial into the nozzle.
7. To lock and engage the dial, rotate it counterclockwise until it clicks into the desired odor intensity setting.

See Odor Neutralizer Technology Settings and Odor Cartridge Replacement sections for more information and instructions.

IMPORTANT: For proper operation, ensure all connections are securely clicked into place.

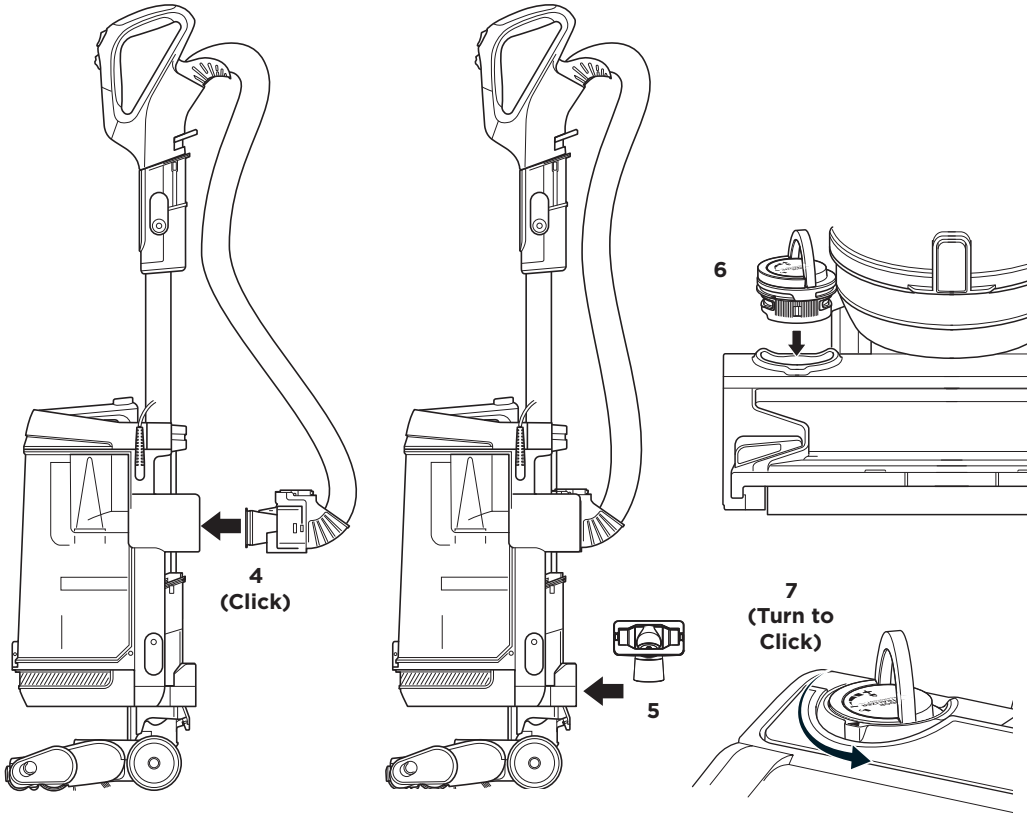

ODOR NEUTRALIZER TECHNOLOGY SETTINGS

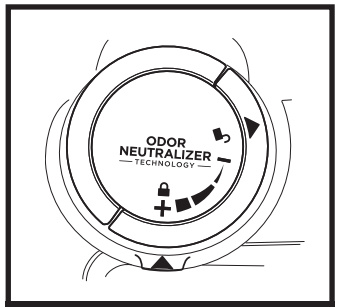

ODOR DIAL

Flip up the dial handle and rotate the odor dial to adjust Odor Neutralizer Technology intensity or to unlock the dial for cartridge access.

Insertion/Removal: Rotate the odor dial to align the teal arrows. Remove the dial to access the odor cartridge for removal or replacement.

Low: Rotate the dial toward the Low position to decrease the intensity to the lowest level when the vacuum is in use.

High: Rotate the dial toward the High position for the highest intensity level when the vacuum is in use. This position is the recommended setting for optimal performance.

ODOR NEUTRALIZER TECHNOLOGY TIPS

Odor Dial Must be Installed for Vacuum to Function Properly

- Remove odor cartridge from dial if you don't want the benefits of Odor Neutralizer Technology.

Maintenance Required

- Clean all filters as recommended under Cleaning Filters.
- Empty the dust cup before storing your vacuum.
- Replace the cartridge as recommended under odor cartridge replacement.
- Visit qr.sharkclean.com/odortech to learn more and purchase replacements.
- If wet pet messes are cleaned up, thoroughly clean the vacuum.

Fragrance Strength Over Time

- The intensity of the Odor Neutralizer Technology's fragrance may diminish over time. It may also have no noticeable fragrance at all. This is natural and does not indicate the technology isn't working. Follow replacement instructions to ensure continued performance.

NOTES:
- The odor dial needs to be installed for the vacuum to function properly, with or without the odor cartridge.
- Odor Neutralizer Technology effectively deodorizes while interacting with odors from inanimate sources.

ODOR NEUTRALIZER TECHNOLOGY

ODOR CARTRIDGE REPLACEMENT

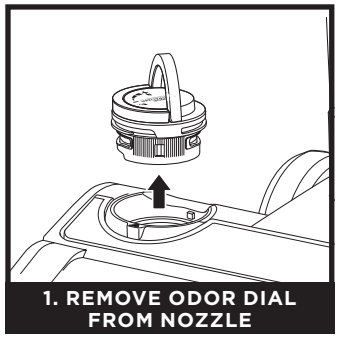

1. REMOVE ODOR DIAL FROM NOZZLE

Flip up the handle and rotate the dial clockwise until the two teal arrows are aligned. Pull the handle to remove the dial from the nozzle.

2. REMOVE OLD ODOR CARTRIDGE

Rotate the cartridge counterclockwise in the dial housing and pull out the cartridge to remove it.

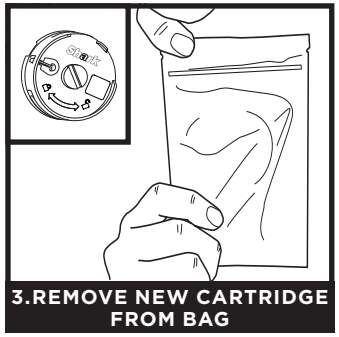

3.REMOVE NEW CARTRIDGE FROM BAG

Remove the new odor cartridge from the sealed packaging. To maintain the life of the cartridge, keep it in the sealed packaging until you are ready to install it.

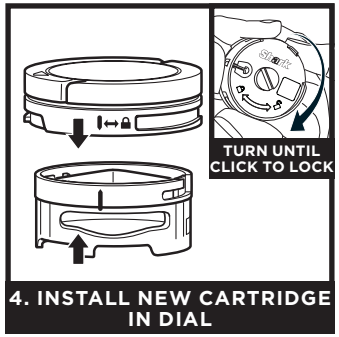

4. INSTALL NEW CARTRIDGE IN DIAL

Align the yellow arrow on the side of the cartridge with the yellow arrow on the side of the dial cover, then insert the cartridge into the dial. Rotate the cartridge clockwise to lock it in place.

5. INSTALL DIAL IN NOZZLE

Align the teal arrow on the dial cover with the teal arrow on the nozzle, then reinsert the dial into the nozzle. Rotate the dial counterclockwise until it clicks into an intensity setting to engage. Rotate further to change the intensity setting.

6. USED CARTRIDGE DISPOSAL

Dispose of the old cartridge by dropping it into the trash.

NOTE: Odor cartridges should be replaced every 6 months for optimal Odor Neutralizer Technology performance.

SETTINGS

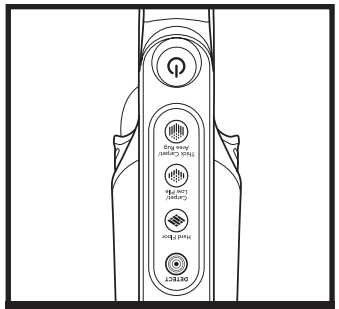

TOUCHSCREEN SELECTOR

To select the cleaning mode, tap one of the icons on the touchscreen on the handle:

Detect Mode: Select Detect mode to activate DuoClean Detect™. In this mode, the vacuum will automatically detect hidden dirt, different types of floor surfaces, and edges and corners, and will adjust suction to maximize cleaning performance.

Manual Surface Modes: Tap one of the surface modes to clean specific surfaces without DuoClean Detect.

Hard Floor: Suction and brushroll speed optimized for cleaning hard floor surfaces and above-floor areas.

Carpet/Low Pile: Suction and brushroll speed optimized for deep cleaning low-pile carpets.

Thick Carpet/Area Rug: Suction and brushroll speed optimized for cleaning thick carpets and area rugs.

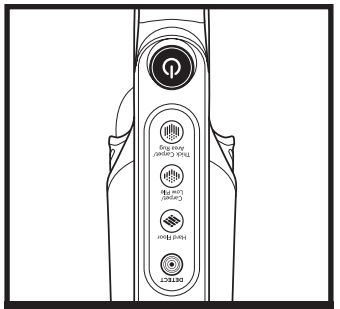

POWER BUTTON

Press power button to turn on vacuum. Please note the brushrolls will not spin unless the wand is reclined.

DUOCLEAN DETECT

Floor Detect™: Senses different surface types and automatically adjusts brushroll speed and suction power for optimized cleaning on each surface.

Dirt Detect: Senses hidden debris you can't see and automatically boosts suction power. The LED indicator light will turn purple, and suction will increase for more cleaning power. Continue cleaning until the light turns white, indicating the surface is clean.

Edge Detect: Focuses and maximizes suction along corners and edges to target stubborn dirt. When an edge is detected, the arrow indicator on the top of the nozzle will turn on.

DETECT INDICATORS

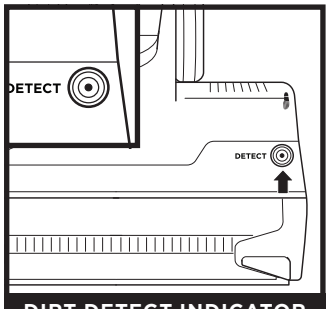

DIRT DETECT INDICATOR

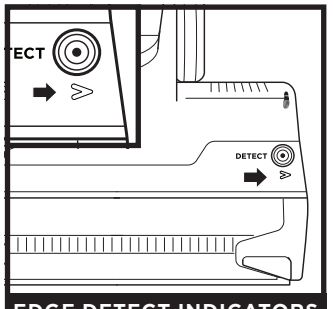

EDGE DETECT INDICATORS

DIRT DETECT INDICATOR

White: Cleaning.

Purple: Cleaning Boost. Surface is dirty, suction will increase to pull in hidden debris.

Red: Sensors require cleaning. Reference maintenance section.

NOTE: Detect Indicators will be off in manual surface modes.

EDGE DETECT INDICATORS

When an edge is detected, the arrow indicator closest to edge will turn on, and the headlights closest to the edge will brighten to illuminate hidden debris.

Blinking White Arrows: When the Edge Detect sensors are obstructed, the arrow indicator lights will blink. Move the unit away from the edge, turn off power, and restart. If the arrows continue to blink, clean the sensors.

HEADLIGHT INDICATOR LIGHTS

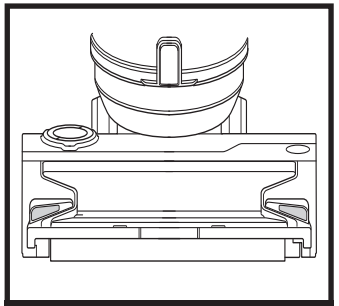

HEADLIGHTS

The headlights will flash or turn red to indicate issues that need attention.

Solid White Lights: The brushrolls are spinning and the unit is working as intended.

Solid Red Lights: There is a jam in the brushroll area. Turn off the vacuum and unplug it, then remove any blockages in the nozzle.

Flashing Red Lights: The motorized floor nozzle is overheating. Turn off the vacuum, unplug it, and remove any blockages. Let the vacuum cool down for at least 60 minutes before restarting.

Flashing White Lights: The vacuum is operating in an environment that is either too hot or too cold.

NOTE: For deep cleaning per ASTM F608 (embedded dirt in carpets) and IEC 62885-2 Cl 5.5 (debris on carpet) tests, please set to Carpet/Low Pile mode.

NOTE: For best cleaning per ASTM F2607 (hard surface floor cleaning) and IEC 62885-2 Cl 5.3 (debris on hard floor) tests, please set to Hard Floor mode.

NOTE: For maximum suction for above-floor cleaning per ASTM F558, set to Hard Floor mode.

WHOLE-HOME CLEANING

CLEANING MODES

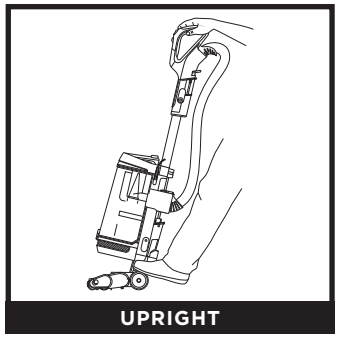

UPRIGHT

To engage brushrolls, step on floor nozzle and tilt handle back.

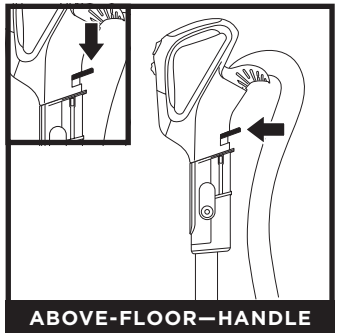

ABOVE-FLOOR—HANDLE

Press the **Handle Release** button to detach the handle from the wand.

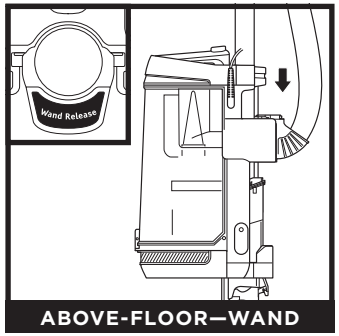

ABOVE-FLOOR—WAND

Press the **Wand Release** button to detach the wand from the pod.

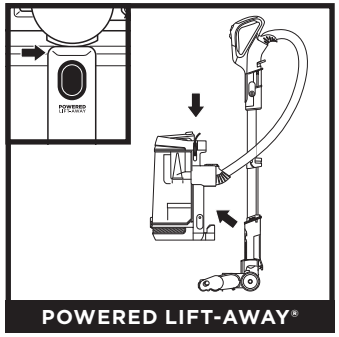

POWERED LIFT-AWAY®

Press the **Lift-Away** button to detach the pod from the floor nozzle.

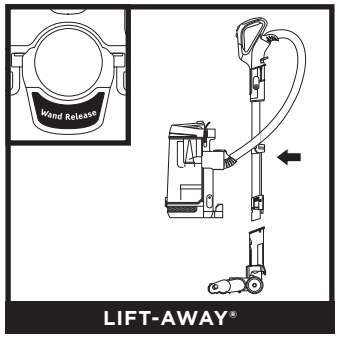

LIFT-AWAY®

With the pod removed, press the **Wand Release** button to detach the wand from the floor nozzle.

NOTE: All accessories are compatible with both the wand and the handle.

EMPTYING THE DUST CUP

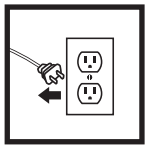

IMPORTANT: Unplug the power cord before performing any maintenance.

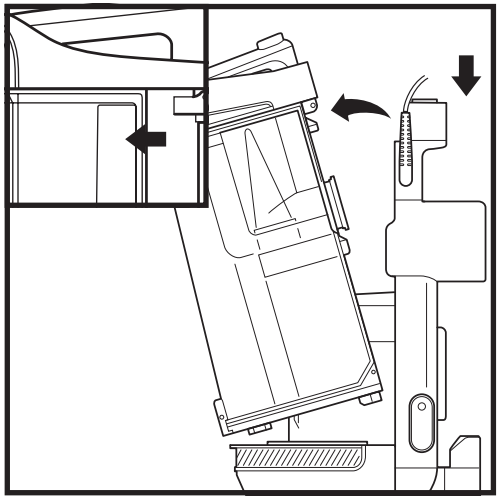

To remove **Dust Cup**, press release button on top of the pod. Tilt dust cup away from wand, then lift to remove.

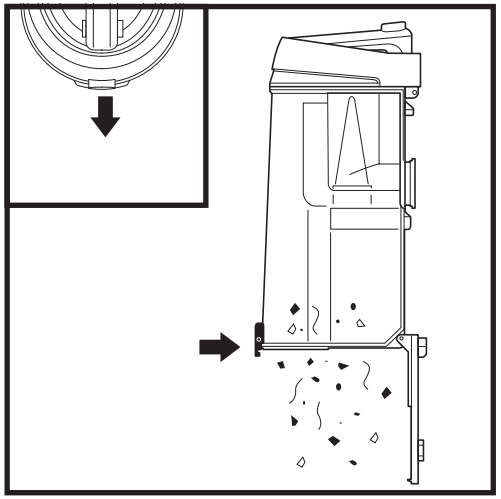

To empty debris into trash, press lower release button and bottom of dust cup will drop open.

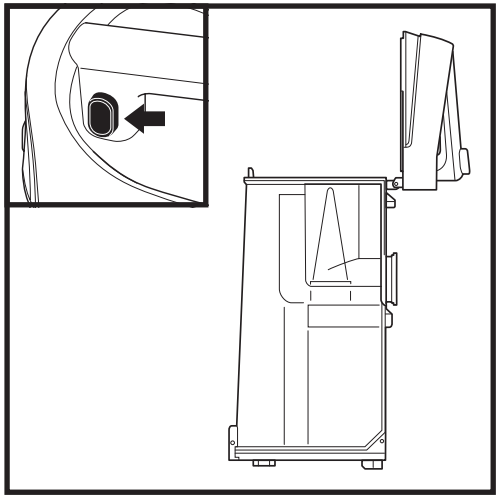

To remove collected debris from **Lint Screen**, press top release button and lift handle to access screen.

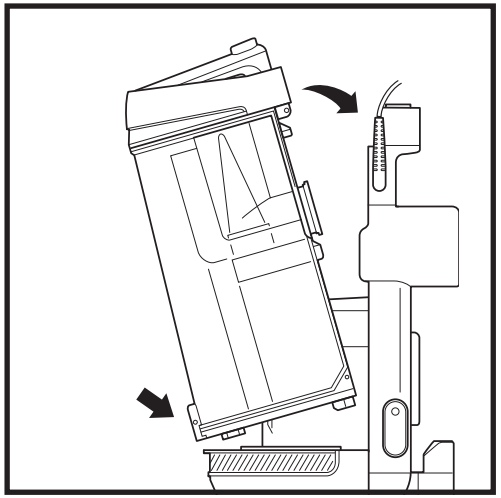

To reinstall, place bottom of dust cup into pod and then tilt until it clicks into place.

CLEANING AND REPLACING THE FILTERS

CLEANING FILTERS

Regularly rinse and replace the filters to maintain your vacuum's suction power.

To prevent damage from cleaning chemicals, rinse filters with cold water only. Allow all filters to air-dry for at least 24 hours before reinstalling them to prevent liquid from being drawn into electric parts.

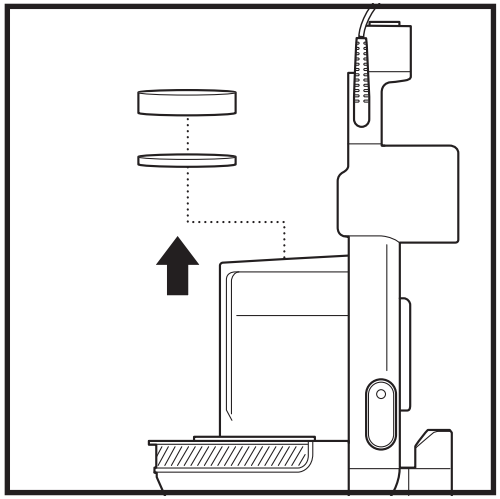

IMPORTANT: DO NOT use soap when cleaning the filters.

CLEAN PRE-MOTOR FILTERS EVERY MONTH

Remove **Dust Cup**, then lift out **Filters**.

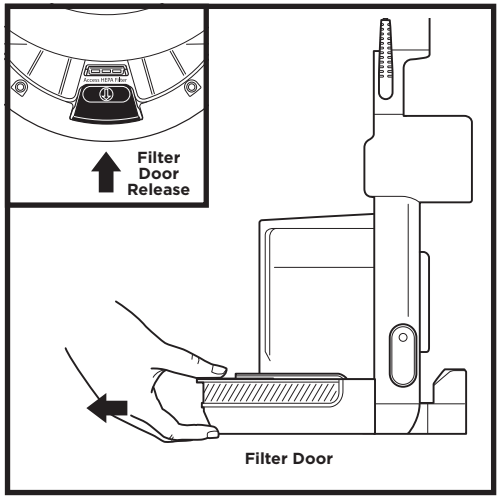

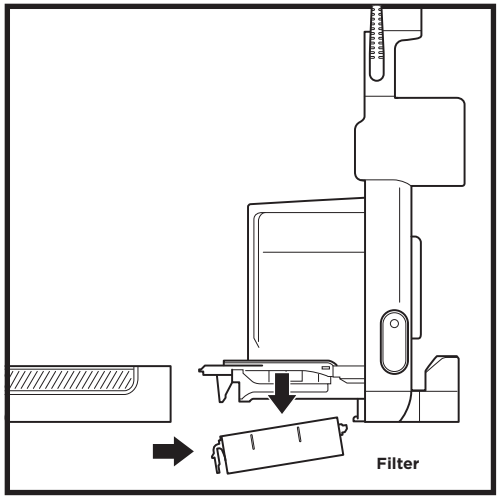

CLEAN HEPA FILTER EVERY YEAR

With the dust cup removed, press the release button on the **Filter Door**. Pull the door forward, slide it out, then remove the **HEPA filter**.

To reinstall the filter, insert it into the unit and replace the filter door.

NOTE: The pre-motor filters should be replaced every 2.5 years. The post-motor filter should be replaced every 3 years.

MAINTENANCE

NOZZLE MAINTENANCE

SELF-CLEANING BRUSHROLL

If any hair is wrapped around the brushroll, continue vacuuming, using Carpet/Low Pile mode on a bare floor surface, a low-pile carpet, or a small area rug. This will allow the self-cleaning brushroll to remove the hair wrap and send it to the dust cup.

If you run over a hard or sharp object or notice a noise change while vacuuming, check for blockages or objects caught in the brushroll.

If some fibers remain wrapped around the brushroll after continued use, clear them from the brushroll.

CLEANING THE SOFT ROLLER

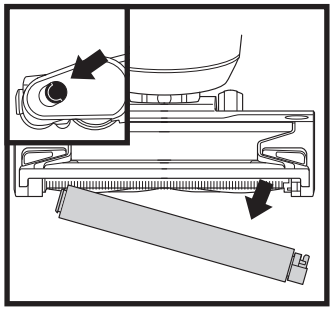

Slide the Soft Roller access button forward to release the Soft Roller.

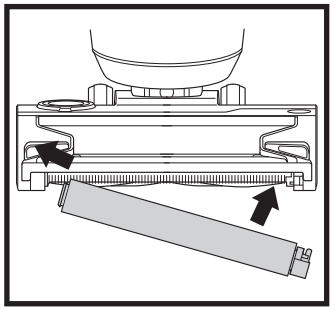

Hand wash the Soft Roller as needed. Use only water, and allow it to air-dry completely for at least 24 hours. Reinsert the Soft Roller in the front of the nozzle until it clicks into place.

CORD MAINTENANCE

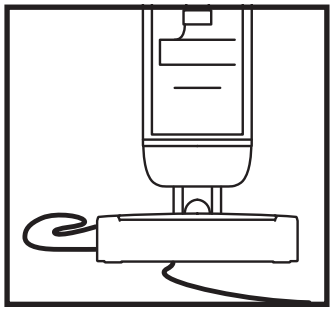

To minimize the risk of power cord damage, **DO NOT** run the vacuum over the power cord. If this occurs, immediately shut off power to the vacuum and remove the cord from the brushroll or nozzle.

1. **DO NOT** pull or carry vacuum cleaner by the cord or use cord as a handle.
2. **DO NOT** unplug by pulling on the cord. Grasp the plug, not the cord.
3. **DO NOT** close the door on the cord.
4. **DO NOT** pull the cord around sharp corners.
5. **DO NOT** leave the cord near heated surfaces.

MAINTENANCE

DETECT SENSOR MAINTENANCE

Make sure to clean the Detect sensors regularly, or when the Dirt Detect Indicator is red, as hair and other debris may build up and obstruct the sensors. If the sensors are partially obstructed, Detect mode will not function as expected. To easily access the nozzle for sensor cleaning, press the Powered Lift-Away button to detach the pod, then press the wand release button to detach the wand from the nozzle.

CLEANING THE DIRT DETECT SENSORS

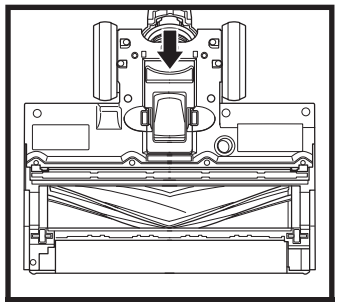

BOTTOM OF NOZZLE

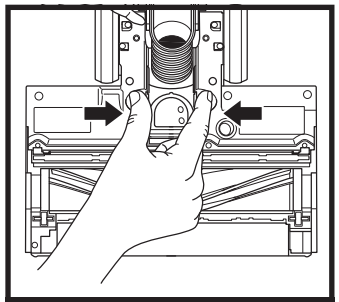

NOZZLE INLET ACCESS

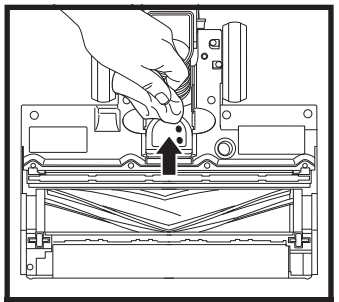

WIPE OFF SENSORS

1. Turn the nozzle upside down and locate the nozzle inlet access point between the brushrolls and rear wheels.
2. Pinch the nozzle hose inlet and pull open the door. Arrows indicate the two small Dirt Detect sensors.
3. Gently wipe the sensors with a microfiber cloth and remove all hair and debris.

CLEANING THE FLOOR DETECT™ SENSOR

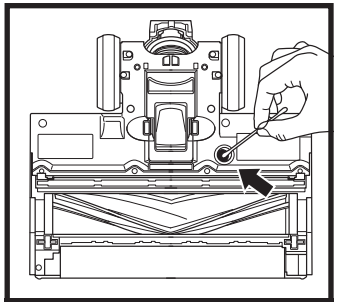

FLOOR DETECT SENSOR

1. Locate the Floor Detect sensor on the bottom of the nozzle.
2. Use a cotton swab to wipe away dirt and debris from the sensor and surrounding area.

CLEANING THE EDGE DETECT SENSORS

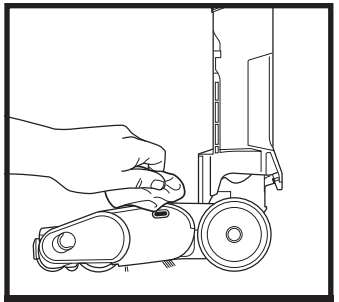

EDGE DETECT SENSORS

1. Locate Edge Detect sensors on the sides of the nozzle (small clear ovals on the top, rear edge).
2. Check the sensors, and remove any dirt or debris that may be blocking them.
3. Gently wipe the sensors with a microfiber cloth, using a circular motion.

CHECKING FOR BLOCKAGES

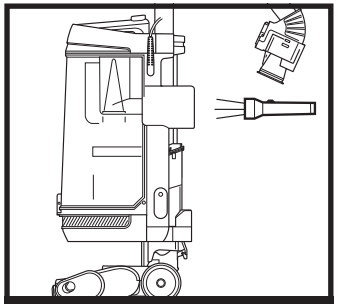

HOSE BLOCKAGE

Detach hose from vacuum pod, and check hose and opening on back of pod for blockages.

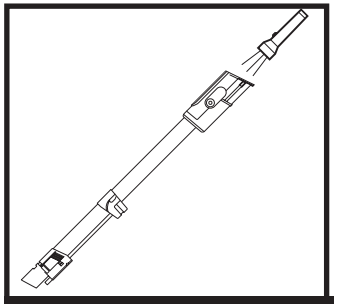

WAND BLOCKAGE

Detach wand from floor nozzle and handle, and check both ends for blockages.

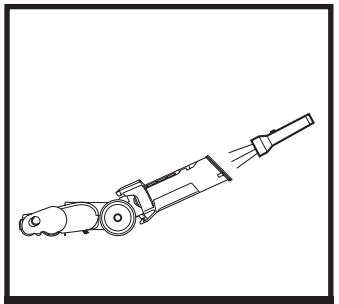

NOZZLE BLOCKAGE

Detach wand from floor nozzle, tilt nozzle neck back, and check opening for blockages.

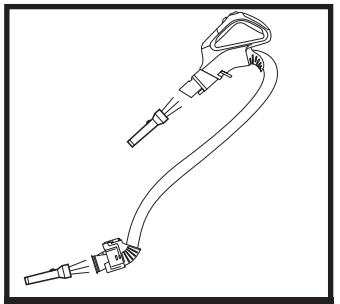

HANDLE/HOSE BLOCKAGE

Detach handle from wand and hose from the vacuum pod, and check openings for blockages.

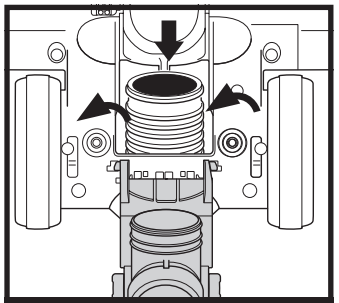

NOZZLE HOSE BLOCKAGE

To access the nozzle hose, pinch the release touchpoints on the bottom of the nozzle, then lift the cover and clear any blockages.

SQUEEGEE BRISTLE STRIP

If your vacuum has low suction or no suction, or if it is struggling to pick up debris while moving in reverse, then you'll need to remove and clean the Squeegee Bristle Strip on the bottom of the nozzle.
To access the squeegee strip, press the Powered-Lift Away button to detach the pod from the wand, then press the Wand Release button to detach the wand from the nozzle.

REMOVING THE SQUEEGEE BRISTLE STRIP

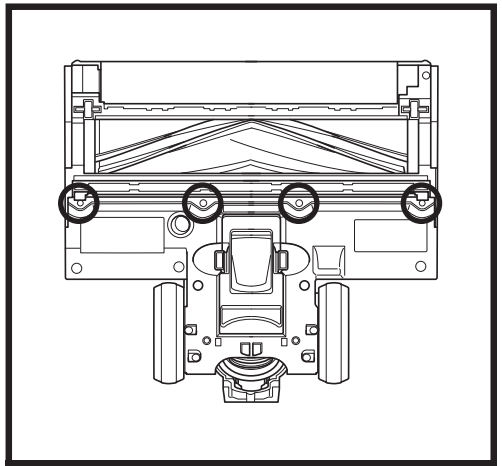

REMOVE SCREWS

1. Turn the nozzle over and locate the squeegee bristle strip between the brushroll and the rear wheels. Use a Phillips-head screwdriver to remove the 4 screws.

NOTE: Keep screws after removal.

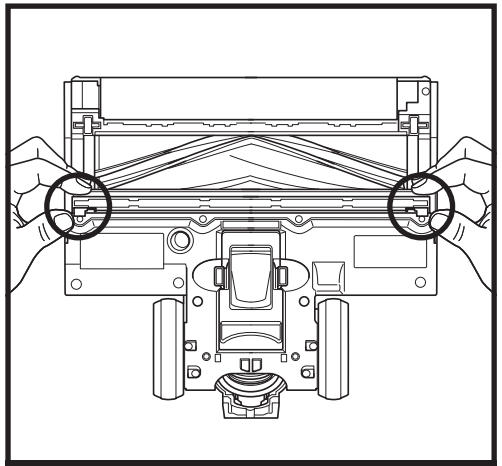

REMOVE SQUEEGEE

2. Remove the squeegee strip by pulling up on the fabric flaps on both ends of the strip.

CLEANING THE SQUEEGEE BRISTLE STRIP & CAVITY

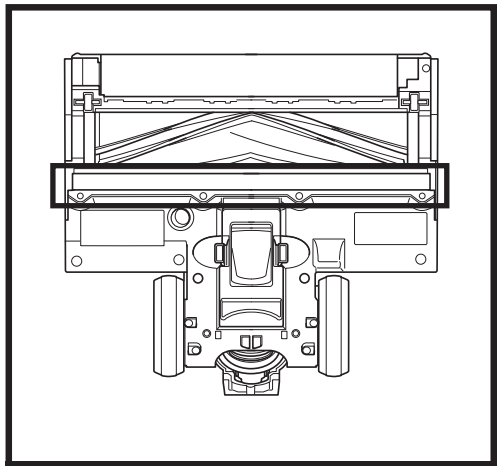

CLEANING THE CAVITY

1. With the strip removed, clean the squeegee cavity and bristle strip. Use a paper towel to wipe off any debris or dust in the cavity and on the bristle strip.

REINSTALLING THE SQUEEGEE BRISTLE STRIP

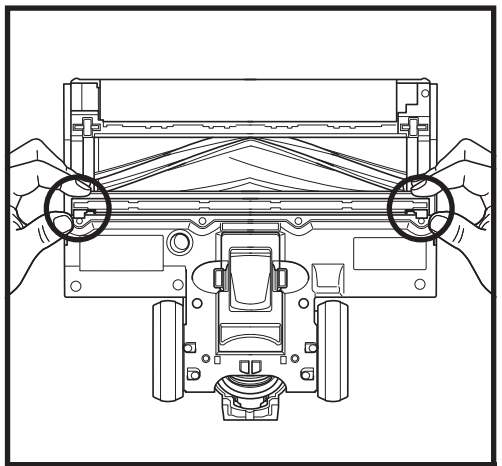

SQUEEGEE REPLACEMENT

1. Hold the squeegee strip by the fabric flaps on the ends, with the bristle side facing up. Insert the plastic piece into the cavity first, while tilting the strip forward, toward the brushroll.

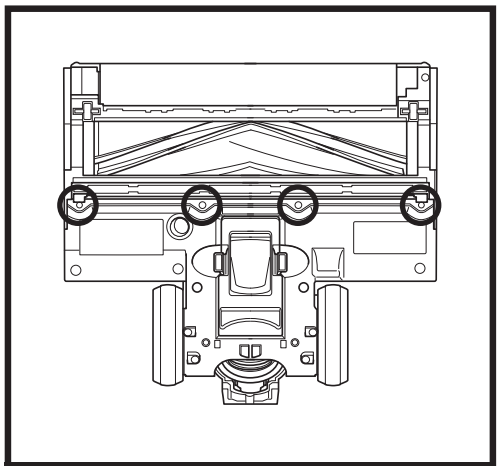

LINE UP SCREW HOLES

2. Align the 4 screw holes on the squeegee strip over the holes in the nozzle. Make sure the strip sits flush with the nozzle, then fasten it securely in place with the screws.

AVAILABLE ACCESSORIES

A Crevice Tool
This slender tool offers extended reach to access corners, baseboards, tight spaces, and ceilings.

B Upholstery Tool
Picks up hair, dust, and large debris from mattresses, couches, curtains, lampshades, and other delicate upholstered fabrics.

C Pet Multi-Tool
A single convertible tool for cleaning tough pet messes two ways: use the stiff bristle brush to clean stuck-on debris, or take off the bristles to reveal an upholstery tool perfect for removing stubborn pet hair and large piles of debris.

D Duster Crevice Tool
Two cleaning tools in one. The crevice tool gives you extended reach to clean in tight spaces, while the soft brush is ideal for dusting delicate surfaces.

E Pet Power Brush
The turbine brush loosens and removes pet hair and debris from carpets, and powerfully deep-cleans dander out of upholstery and other surfaces.

F Under-Appliance Wand
Clean under and behind hard-to-move appliances and furniture with this adjustable 36” tool. Flip the extension piece over to clean the underside of appliances.

G Anti-Allergen Dust Brush
This brush features nylon fiber bristles specifically designed for removing fine dust and allergen particles from the most delicate surfaces.

H HairPro® Self-Cleaning Pet Power Brush
Tackles pet hair and ground-in dirt from above-floor areas like carpeted stairs and upholstery, while actively removing hair wrap as it cleans.

I Home & Car Detail Kit
Deep-clean your car like a professional detailer, or clean hard-to-reach areas in your home. Micro-sized tools let you clean around delicate objects and access the tightest spaces like car vents and computer keyboards.

J Accessory Bag
This convenient accessory storage bag measures 32 cm x 70 cm and fits the Under-Appliance Wand. Smaller size available at sharkaccessories.com.

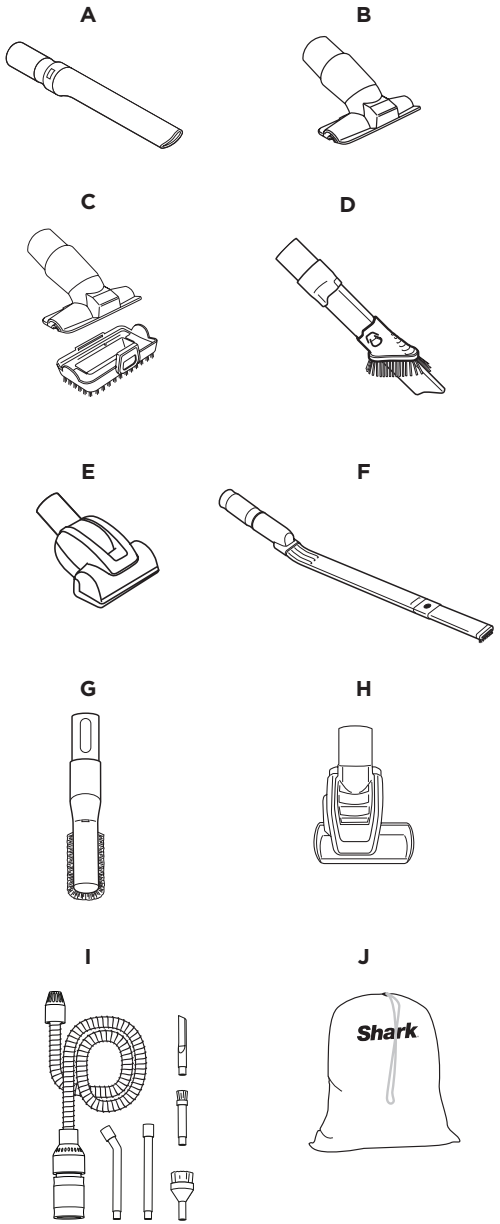

NOTE: Not all accessories come with all units. For a list of the accessories included with this model, see the top inside flap of the box. To order additional accessories, visit **sharkaccessories.com**.

TROUBLESHOOTING

Power cord caught in brushroll or floor nozzle.
- To minimize the risk of power cord damage, DO NOT run the vacuum over the power cord. If this occurs, immediately shut off power to the vacuum and remove the cord from the brushroll or nozzle.
- Inspect power cord and plug for any damage before use. DO NOT use vacuum cleaner with a damaged cord or plug. Turn off all controls before plugging in or unplugging the vacuum cleaner. Store your vacuum cleaner with the power cord secured around the two cord hooks.

Vacuum is not picking up debris. No suction or light suction.
- Check filters to see if they need cleaning. Follow instructions for rinsing and air-drying the filters before reinstalling them.
- Dust cup may be full; empty dust cup.
- Check hose, hose connections, nozzle, wand, pod, and accessories for blockages. Clear any blockages found. See Checking for Blockages section for more information.
- If any hair, string, or carpet fibers are wrapped around the brushroll, extend cleaning time to allow the self-cleaning brushroll to remove them. If some hair or fibers remain wrapped around brushroll after continued use, carefully remove them. See Cleaning the Brushroll section for more information.
- If low/no suction persists, contact Customer Service 1-800-798-7398.

Vacuum lifts area rugs.
- Make sure the touchscreen selector on the handle switch is set to the Thick Carpet/Area Rug setting.
- Suction is powerful. Take care when vacuuming area rugs or rugs with delicately sewn edges.

Dirt Detect Indicator light not responding.
- Make sure the touchscreen selector on the handle switch is set to Detect Mode. The Dirt Detect Indicator will be off in manual surface modes.
- Check sensors located in nozzle inlet to see if there are any blockages (See Detect Sensor Maintenance section for more information.).
- Remove any blockages and clean sensors.

Brushrolls do not spin.
- If the headlight indicator lights turn red, immediately turn off and unplug the vacuum. Remove pod and wand from floor nozzle and clear any blockages. Reconnect nozzle, plug in vacuum, and turn on power.
- With the power on, recline the handle, which will automatically turn on the brushrolls.

Vacuum turns off on its own or headlight indicator light flashes red.
If your vacuum overheats, the thermostat will automatically turn off the motor. Perform the following steps to restart:
1. Turn vacuum off and unplug it.
2. Empty dust cup and clean filters. See Emptying the Dust Cup and Cleaning and Replacing the Filters sections for more information.
3. Check for blockages in hose, wand, floor nozzle, accessories, and inlet openings.
4. Allow unit to cool for a minimum of 60 minutes.
5. Plug in vacuum and turn it on.

Vacuum is emitting air that smells bad.
- Dust cup may be full; empty dust cup. Empty dust cup after each use for optimal Odor Neutralizer Technology performance.
- Check filters to see if they need cleaning. Follow instructions for rinsing and air-drying the filters before reinstalling them.
- Check to make sure odor cartridge is installed in the dial and the dial is installed in the nozzle.
- Check the Odor Neutralizer Technology dial on the nozzle to see what setting is enabled.
- If Odor Neutralizer Technology dial is at any setting from Low to High and the cartridge has been installed for 6 months or longer, consider replacing it.
- If the odor cartridge is still emitting a scent but you dislike it, consider turning the intensity down, or reinstall the dial in the nozzle without the cartridge.
- If the Odor Neutralizer Technology cartridge is not emitting a scent, consider replacing it.

For all other issues, please go to support.sharkclean.com/ or call Customer Service 1-800-798-7398.

FIVE (5) YEAR LIMITED WARRANTY

The Five (5) Year Limited Warranty applies to purchases made from authorized retailers of **SharkNinja Operating LLC.** Warranty coverage applies to the original owner and to the original product only and is not transferable.

SharkNinja warrants that the unit shall be free from defects in material and workmanship for a period of five (5) years from the date of purchase when it is used under normal household conditions and maintained according to the requirements outlined in the Owner's Guide, subject to the following conditions and exclusions:

What is covered by this warranty?

1. The original unit and/or non-wearable parts deemed defective, in SharkNinja's sole discretion, will be repaired or replaced up to five (5) years from the original purchase date.
2. In the event a replacement unit is issued, the warranty coverage ends six (6) months following the receipt date of the replacement unit or the remainder of the existing warranty, whichever is later. SharkNinja reserves the right to replace the unit with one of equal or greater value.

What is not covered by this warranty?

1. Normal wear and tear of wearable parts (such as foam filters, HEPA filters, pads, etc.), which require regular maintenance and/or replacement to ensure the proper functioning of your unit, are not covered by this warranty. Replacement parts are available for purchase at **sharkaccessories.com**.
2. Any unit that has been tampered with or used for commercial purposes.
3. Damage caused by misuse (e.g., vacuuming up water or other liquids), abuse, negligent handling, failure to perform required maintenance (e.g., not cleaning the filters, not removing debris from the brushroll), or damage due to mishandling in transit.
4. Consequential and incidental damages.
5. Defects caused by repair persons not authorized by SharkNinja. These defects include damages caused in the process of shipping, altering, or repairing the SharkNinja product (or any of its parts) when the repair is performed by a repair person not authorized by SharkNinja.
6. Products purchased, used, or operated outside North America.

How to get service

If your appliance fails to operate properly while in use under normal household conditions within the warranty period, visit **sharkclean.com/support** for product care and maintenance self-help. Our Customer Service Specialists are also available at **1-800-798-7398** to assist with product support and warranty service options, including the possibility of upgrading to our VIP warranty service options for select product categories. So we may better assist you, please register your product online at registeryourshark.com and have the product on hand when you call.

SharkNinja will cover the cost for the customer to send in the unit to us for repair or replacement. A fee of $25.95 (subject to change) will be charged when SharkNinja ships the repaired or replacement unit.

How to initiate a warranty claim

You must call **1-800-798-7398** to initiate a warranty claim. You will need the receipt as proof of purchase. We also ask that you register your product online at registeryourshark.com and have the product on hand when you call, so we may better assist you. A Customer Service Specialist will provide you with return and packing instruction information.

How state law applies

This warranty gives you specific legal rights, and you also may have other rights that vary from state to state. Some states do not permit the exclusion or limitation of incidental or consequential damages, so the above may not apply to you.

REGISTER YOUR PURCHASE

registeryourshark.com

Scan QR code using mobile device

Scan here or visit qr.sharkclean.com/odortech for more information

Benefits of registering your product and creating an account:

- Get easier, faster product support and access to warranty information
- Access troubleshooting and product care instructions
- Be among the first to know about exclusive product promotions

TIP: You can find the model and serial numbers on the QR code label on the bottom of the back of the vacuum pod.

RECORD THIS INFORMATION

Model Number: _____

Serial Number: _____

Date of Purchase: _____
(Keep receipt)

Store of Purchase: _____

TECHNICAL SPECIFICATIONS

Voltage: 120V~, 60Hz

Watts: 1416W

ODOR NEUTRALIZER TECHNOLOGY SPECIFICATIONS

1. Product Name: Odor Neutralizer Technology Cartridge
2. Manufacturer: Shark Ninja 89 A Street Needham, MA 02494
3. Weight: 17.6g / 0.62oz
4. Ingredients: Solid SM composite polymer C17 + fragrance SE 272235

PLEASE READ CAREFULLY AND KEEP FOR FUTURE REFERENCE.

This Owner's Guide is designed to help you get a complete understanding of your new Shark® POWERDETECT™ Upright Vacuum with Detect Technology, DuoClean Detect™, Powered Lift-Away®, Self-Cleaning Brushroll, and Odor Neutralizer Technology.

SharkNinja Operating LLC
US: Needham, MA 02494
CAN: Ville St-Laurent, QC H4S 1A7

1-800-798-7398
sharkclean.com

Illustrations may differ from actual product. We are constantly striving to improve our products; therefore the specifications contained herein are subject to change without notice.

This product may be covered by one or more U.S. patents. See sharkninja.com/patents for more information.

© 2024 SharkNinja Operating LLC. HAIRPRO, LIFT-AWAY, POWERED LIFT-AWAY, and SHARK are registered trademarks of SharkNinja Operating LLC. DUOCLEAN DETECT, FLOOR DETECT and POWERDETECT are trademarks of SharkNinja Operating LLC.

AZ4000Series_IB_E_REV_Mv2

@sharkcleaning