Shark® IONFLEX™ 2X
Shark® IONFLEX™

with DuoClean™

IF200
IF250
Series

INSTRUCTIONS

sharkclean.com

1-800-798-7398

THANK YOU
for purchasing the Shark® IONFLEX™ with DuoClean™

TIP: You can find the model and serial numbers on the QR code label which is located on the bottom of the dust cup.

REGISTER YOUR PURCHASE

registeryourshark.com

1-800-798-7398

Scan QR code using mobile device

RECORD THIS INFORMATION

Model Number: _____

Serial Number: _____

Date of Purchase (Keep receipt): _____

Store of Purchase: _____

TECHNICAL SPECIFICATIONS

Voltage:	25.2V ⎓
Watts:	300W
Amps:	11.9A

PLEASE READ CAREFULLY AND KEEP FOR FUTURE REFERENCE.

This instruction manual is designed to help you get a complete understanding of your new Shark IONFLEX with DuoClean.

If you have any questions, please call the Customer Service line at 1-800-798-7398.

CONTENTS

Important Safety Instructions 3

Getting To Know Your Shark® IONFLEX™ with DuoClean™ 6

Using Your ION Power Pack Battery 7
Installing Your ION Power Pack Battery 7
Charging Your ION Power Pack Battery 7
Using the ION Power Pack Battery Charger 7
Using the ION Power Pack Battery Charging Dock 7
LED Battery Power Meter 7
Recycling Your ION Power Pack Battery 7

Assembling Your Vacuum 8

Using the MultiFLEX™ wand 9
MultiFLEX Storage 9

Using Smart Response™ Technology 10
Choosing a Surface Setting 10
Choosing a Suction Setting 10

Using Your Vacuum in Above-Floor Mode 11

Accessories 13

Maintaining Your Vacuum 15
Emptying the Dust Cup 15
Cleaning the Filters 16
Maintaining the Brushroll 17
Maintaining the Soft Roller 18
Checking for Blockages 18

Troubleshooting Guide 19

Warranty 21

Battery Warranty 22

IMPORTANT SAFETY INSTRUCTIONS

FOR HOUSEHOLD USE ONLY • PLEASE READ CAREFULLY BEFORE USE

⚠ WARNING

To reduce the risk of injury, fire, electric shock, and property damage resulting from improper use of the appliance, carefully observe the following instructions. This unit contains electrical connections and moving parts that potentially present risk to the user.

THE DUOCLEAN™ FLOOR NOZZLE, WAND, AND HANDHELD VACUUM CONTAIN ELECTRICAL CONNECTIONS:

- These are **NOT** serviceable parts.
- **DO NOT** use to vacuum any liquids.
- **DO NOT** immerse in water when cleaning.
- If handheld vacuum/wand is damaged, discontinue use.

1 To avoid fire, explosion, or injury, inspect ION Power Pack and chargers for any damage before use. **DO NOT** use vacuum cleaner with a damaged power pack or charger.

2 **DO NOT** use outdoors or on wet surfaces. Use only on dry surfaces.

3 If vacuum cleaner is not working as it should, or has been dropped, damaged, left outdoors, or immersed in water, return it to SharkNinja Operating LLC for examination, repair, or adjustment.

4 **DO NOT** handle charger or vacuum cleaner with wet hands.

5 **DO NOT** leave vacuum cleaner unattended.

6 Keep power pack away from heated surfaces.

7 Always turn off this appliance before connecting or disconnecting floor nozzle.

8 Use only Shark® chargers and batteries. Other types of batteries may burst, causing injury and damage.

9 Use ION Power Pack Charging Dock on flat and stable surfaces only.

10 **DO NOT** incinerate appliance, even if it is severely damaged, as power pack may explode in a fire.

GENERAL USE

11 **DO NOT** hang vacuum cleaner from wall mount when MultiFLEX™ Wand is in storage mode.

12 Use only as described in this manual.

13 Keep your work area well lit.

14 Keep the vacuum cleaner moving over the carpet surface at all times to avoid damaging the carpet fibers.

15 **DO NOT** place vacuum cleaner on unstable surfaces such as chairs or tables.

16 **DO NOT** put any objects into openings. **DO NOT** use with any opening blocked; keep free of dust, lint, hair, and anything that may reduce airflow.

17 **DO NOT** allow young children to operate the appliance or use as a toy. Close supervision is necessary when any appliance is used near children.

18 **DO NOT** use without Soft Roller, dust cup door, and all filters in place.

19 **DO NOT** use if airflow is restricted; if the air paths or the floor nozzle become blocked, turn off the vacuum cleaner and remove battery. Clear all obstructions before returning battery to vacuum and powering on again.

SAVE THESE INSTRUCTIONS

20 Keep floor nozzle away from hair, face, fingers, uncovered feet, or loose clothing.

21 Only use manufacturer's recommended attachments.

22 **DO NOT** charge power pack at temperatures below 50°F (10°C) or above 104°F (40°C).

23 Store the appliance indoors. **DO NOT** use or store it below 37.4°F (3°C). Ensure the appliance is at room temperature before operating.

DUST CUP/FILTERS/ACCESSORIES

Before turning on the vacuum:

24 Make sure that all filters are thoroughly dry after routine cleaning.

25 Make sure brushroll, Soft Roller, dust cup door, and all filters are in place after routine maintenance.

26 Make sure accessories are free of blockages and keep openings away from face and body.

27 Use only Shark® brand filters and accessories. Using other brands will void warranty.

GENERAL CLEANING

28 **DO NOT** vacuum up hard or sharp objects such as glass, nails, screws, or coins that could damage the vacuum cleaner.

29 **DO NOT** vacuum up drywall dust, fireplace ash, or embers. **DO NOT** use as an attachment to power tools for dust collection.

30 **DO NOT** vacuum up smoking or burning objects such as hot coals, cigarette butts, or matches.

31 **DO NOT** vacuum up flammable or combustible materials (e.g., lighter fluid, gasoline, or kerosene) or use vacuum in areas where they may be present.

32 **DO NOT** vacuum up toxic solutions (e.g., chlorine bleach, ammonia, or drain cleaner).

33 **DO NOT** use in an enclosed space where vapors are present from paint, paint thinner, moth-proofing substances, flammable dust, or other explosive or toxic materials.

34 **DO NOT** vacuum up any liquids.

35 **DO NOT** immerse vacuum cleaner in water or other liquids.

36 Use extra care when cleaning on stairs.

CONTINUED ON PAGE 5

IMPORTANT SAFETY INSTRUCTIONS

FOR HOUSEHOLD USE ONLY • PLEASE READ CAREFULLY BEFORE USE

⚠ WARNING

To reduce the risk of injury, fire, electric shock, and property damage resulting from improper use of the appliance, carefully observe the following instructions. This unit contains electrical connections and moving parts that potentially present risk to the user.

ION POWER PACK BATTERY

37 The ION Power Pack Battery is the power source for the appliance. When the ION Power Pack Battery is connected to the appliance, **DO NOT** carry the appliance with your finger on the power button. **DO NOT** charge appliance with the power on.

38 Disconnect the ION Power Pack Battery from the appliance before making any adjustments or troubleshooting.

39 Use only Shark® chargers YLS0243A-T288080/YLS0483A-T2880802 to charge. Use of incorrect charger may create a risk of fire when used with ION Power Pack Battery.

40 Use appliance only with specifically designated ION Power Pack Batteries. Use of any other battery packs may create a risk of injury and fire.

41 When ION Power Pack Battery is not in use, keep it away from all metal objects, such as paper clips, coins, keys, nails, or screws. Shorting the battery terminals together increases the risk of fire or burns.

42 Under abusive conditions, liquid may be ejected from the power pack. Avoid contact with liquid, as it may cause irritation or burns. If contact occurs, flush with water. If liquid contacts eyes, seek medical help.

43 **DO NOT** expose power pack or appliance to fire or temperature above 266°F (130°C) as it may cause explosion.

44 Follow all charging instructions and **DO NOT** charge the power pack or appliance outside of the temperature range specified in the instructions (see #21). Charging improperly or at temperatures outside of the specified range may damage the ION Power Pack Battery and increase the risk of fire.

45 Appliance should only be serviced by a qualified repair person using only identical replacement parts. To ensure safety, **DO NOT** modify or attempt to repair the appliance or the power pack yourself, except as indicated in the instructions for use and care.

46 ION Power Pack Battery should not be stored at temperatures below 37.4°F (3°C) or above 104°F (40°C) to maintain long-term battery life.

47 ION Power Pack Battery should not be exposed to or submerged in any water, salt water, or other liquids.

SAVE THESE INSTRUCTIONS

GETTING TO KNOW YOUR SHARK® IONFLEX™ WITH DUOCLEAN™

WELCOME!

Congratulations on your purchase. Use this instruction manual to learn about your new vacuum's great features. From assembly to use to maintenance, you will find it all in here.

NOTE: Your ION Power Pack Battery does not come fully charged. Prior to first use, charge completely. During first use, discharge fully to condition your ION Power Pack Battery. Failure to do so may cause LED indications to work incorrectly. Always store ION Power Pack Battery with a partial charge.

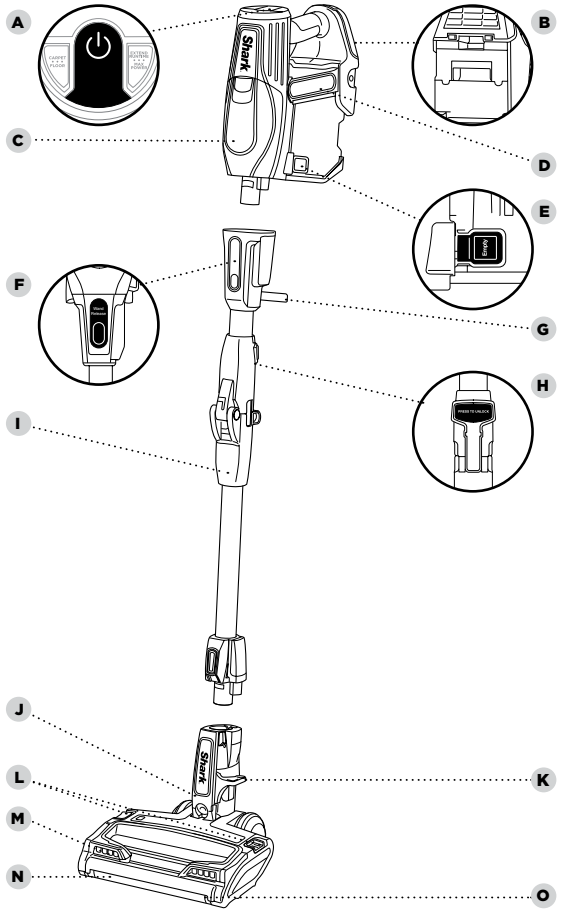

A Power Switch
B Battery Release
C Handheld Vacuum
D ION Power Pack Battery
E Dust Cup Release
F MultiFLEX™ Wand Release
G MultiFLEX Storage Carry Handle
H MultiFLEX Wand Button
I MultiFLEX Wand
J DuoClean Floor Nozzle
K Lower Wand Release Pedal
L Brushroll Garage Release Buttons
M Headlights
N Soft Roller
O Soft Roller Access Tab

USING YOUR ION POWER PACK BATTERY

TAKE CHARGE OF YOUR RUNTIME:

Upgrade to the 2X ION Power Pack System (additional battery and charging dock), purchase additional batteries, and discover more charging options by visiting sharkclean.com/batteries

RECYCLING YOUR ION POWER PACK BATTERY

When your ION Power Pack Battery needs to be replaced, dispose of it or recycle it in accordance with local ordinances or regulations. In some areas, it is illegal to place spent lithium-ion batteries in the trash or in a municipal solid waste stream. Return spent power packs to an authorized recycling center or to retailer for recycling. Contact your local recycling center for information on where to drop off the spent power pack.

NOTE: ION Power Pack takes approximately 3.5 hours for full charge.

INSTALLING YOUR ION POWER PACK BATTERY

Slide the ION Power Pack Battery into the slot on the back of the handheld vacuum.

To remove, pinch the release tab and slide the ION Power Pack Battery out of the handheld vacuum.

CHARGING YOUR ION POWER PACK BATTERY

Using the ION Power Pack Battery Charger

Connect the ION Power Pack Battery Charger to the port on the side of the ION Power Pack Battery, then plug the charger into a wall outlet. The ION Power Pack Battery can be charged whether it is inside or outside the handheld vacuum.

Using the ION Power Pack Battery Charging Dock

Connect ION Power Pack Battery Charger to the Charging Dock. Place power pack onto dock, then connect charger to wall outlet.

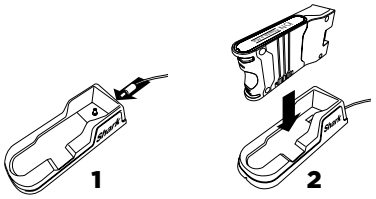

LED BATTERY POWER METER

In Use

As the ION Power Pack discharges, its 3 LED lights will gradually turn off in sequential order. When less than 5% of charge remains, the bottom LED light will flash, indicating a charge is needed.

Charging

As the ION Power Pack Battery charges, the lights will first blink and then illuminate steadily, in sequential order. All 3 lights will glow steadily upon receiving a full charge, and then turn off after a short period. This preserves long-term battery life and allows the battery to remain connected to the charger even after reaching full charge.

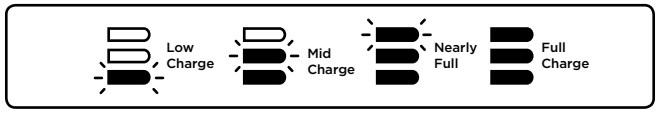

ASSEMBLING YOUR VACUUM

STEP 1

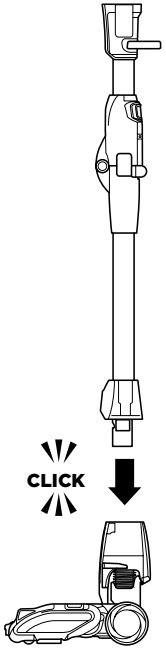

STEP 2

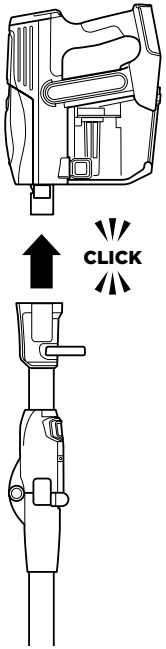

1 Insert the wand into the DuoClean™ floor nozzle, pressing it in until it clicks securely into place.

2 Insert the handheld vacuum into the top of the wand, pressing it in until it clicks securely into place.

USING THE MULTIFLEX™ WAND

WARNING: This vacuum does not stand up on its own. Using the unit when it lacks stability may result in personal injury. To place in MultiFLEX Storage mode, press the MultiFLEX Wand button and gently fold the handheld vacuum down toward the floor nozzle.

TIP: The carry handle located below the handheld vacuum can also be used to assist in taking the vacuum in and out of MultiFLEX Storage mode.

NOTE: Before vacuuming your delicate area rugs or carpet, refer to the rug manufacturer's recommended cleaning instructions.

WHAT DOES THE BRUSHROLL INDICATOR LIGHT MEAN?

Solid Green
The brushrolls are on and working as they should.

Solid Red
There is a jam in the brushroll area. Turn your vacuum off and remove the blockage.

No Light
The brushrolls are off because the vacuum is off, or the nozzle is not correctly connected to the wand or handheld vacuum.

USAGE

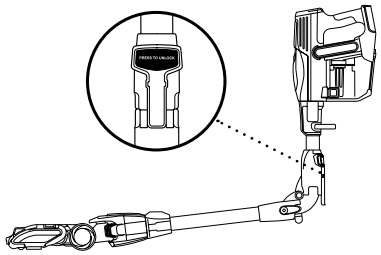

STORAGE

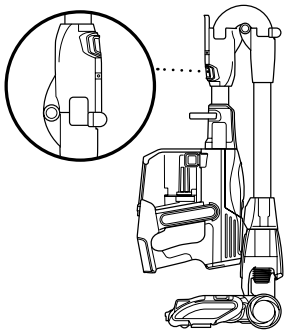

1 To start vacuuming, press the Power button, then recline the wand to start the brushrolls.

USING THE MULTIFLEX WAND

To easily access hard-to-reach areas under furniture without having to bend down, press the MultiFLEX Wand button to position the wand to a lower angle.

MULTIFLEX STORAGE

1 Press the MultiFLEX Wand Lock Release button and gently fold the handheld vacuum forward toward the floor nozzle until it locks in storage mode. Use the handle to carry the vacuum to its storage location.

To take the vacuum out of storage mode, press the MultiFLEX Wand Lock Release button while lifting up the handheld vacuum. When straightened, the wand will lock in place.

USING SMART RESPONSE™ TECHNOLOGY

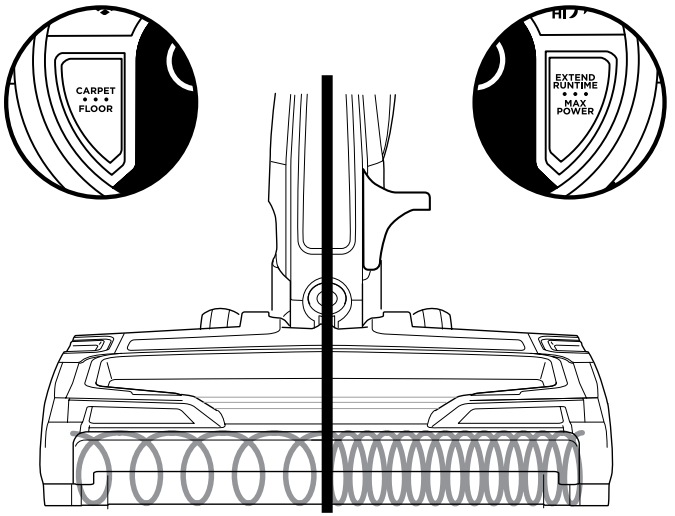

SMART RESPONSE TECHNOLOGY

The Smart Response Technology lets you select the ideal power setting and brushroll speed for each cleaning job.

CHOOSING A SURFACE SETTING

CARPET setting – For cleaning high pile carpets. Both brushrolls spin faster, working together to pick up debris below the surface of your carpets.

FLOOR setting – For cleaning bare floors and area rugs. The brushroll and the Soft Roller both spin together slowly to gently clean hard floors and delicate rugs. The Soft Roller traps fine dust and large particles, while the brushroll directs that debris to the suction channel.

CHOOSING A SUCTION SETTING

There are 2 suction settings:

EXTEND RUNTIME – For everyday cleaning.

MAX POWER – Maximum power for heavy-duty cleaning.

NOTE: The MAX POWER setting drains the ION Power Pack Batteries faster than extend runtime setting.

NOTE: For deep carpet cleaning per ASTM F608, use Carpet and Max Power settings.

USING YOUR VACUUM IN ABOVE-FLOOR MODE

TIP: To conveniently clean stairs, attach the handheld vacuum directly to the DuoClean™ floor nozzle.

STEP 1

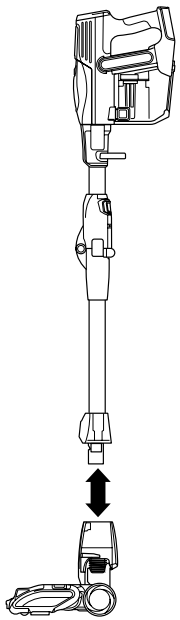

STEP 2

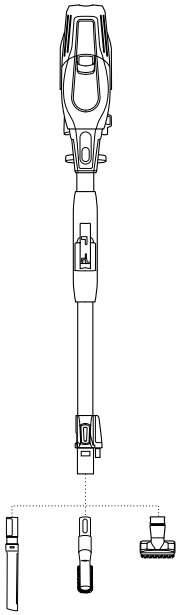

FOR LONG-REACH CLEANING:

1. Stand the vacuum upright. Step on the foot pedal and pull the wand up to disconnect it from the DuoClean floor nozzle. Press the MultiFLEX™ Wand button to vacuum with the wand at a lower angle.
2. Attach desired cleaning accessory to the wand.

STEP 1

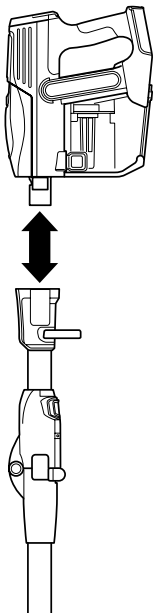

STEP 2

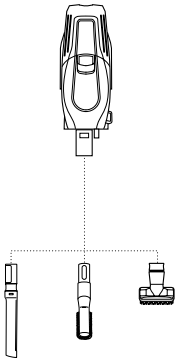

FOR SHORT-REACH CLEANING:

1. Press the MultiFLEX™ Wand Release button on the top of the wand to disconnect it from the handheld vacuum.
2. Attach desired cleaning accessory to the handheld vacuum.

ACCESSORIES

There are a variety of accessories that are compatible with this vacuum series.

The Quick Start Guide shows the select accessories that are included with your model.

To purchase additional accessories, visit sharkaccessories.com

A Pet Multi-Tool
Two tools for cleaning tough pet messes: first, a stiff bristle brush for cleaning stuck-on debris. Then remove the bristles to reveal an upholstery tool for removing stubborn pet hair and lint from furniture.

B 8” Crevice Tool
Clean tight spaces, reach baseboards and ceilings with this slim crevice tool.

C Anti-Allergen Dust Brush
Specially designed for removing fine dust and allergen particles from the most delicate surfaces.

D ION Power Pack Battery Charging Docks
Portable units for stand-alone charging of 1-2 batteries wherever an outlet is nearby.

E ION Power Pack Battery Charger
Can be plugged directly into the ION Power Pack Battery, or used as a power source for the ION Power Pack Battery Charging Dock.

F Deep-Cleaning Motorized Pet Tool
Motorized compact brush powerful enough to remove deeply embedded allergens, dirt and hair from multiple surfaces. Stores onboard for your convenience.

G MultiFLEX™ Under Appliance Wand
Pivoting wand that extends to clean under appliances and on top of furniture.

H Duster Crevice Tool
Two cleaning tools in one. The crevice tool provides extended reach into small spaces, while the dusting brush cleans a multitude of surfaces.

A
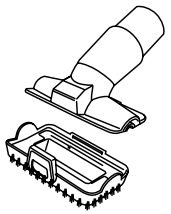

B
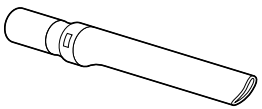

C

D
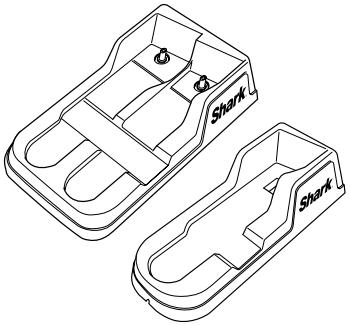

E
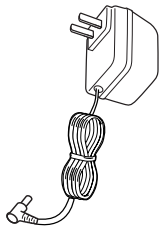

F
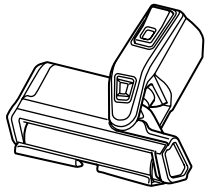

G
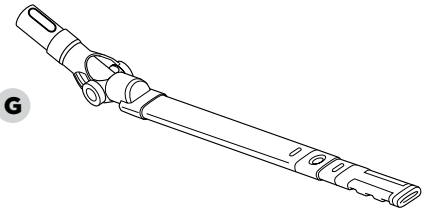

H
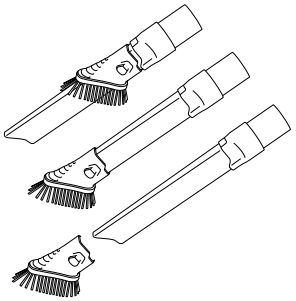

MAINTAINING YOUR VACUUM

WARNING: To reduce the risk of shock and unintended operation, turn off power and remove the ION Power Pack before servicing.

WARNING: Hand wash filters only with water to prevent damage from cleaning chemicals. Allow ALL filters to air-dry completely before replacing them in the vacuum to prevent liquid from being drawn into electric parts.

IMPORTANT: Clean the dust screen inside the dust cup as required.

NOTE: Empty dust cup when debris reaches the MAX fill line.

RECOMMENDED FILTER CLEANING SCHEDULE:

Pre-Motor Filter Kit
(Foam & Felt)
Clean once a month.

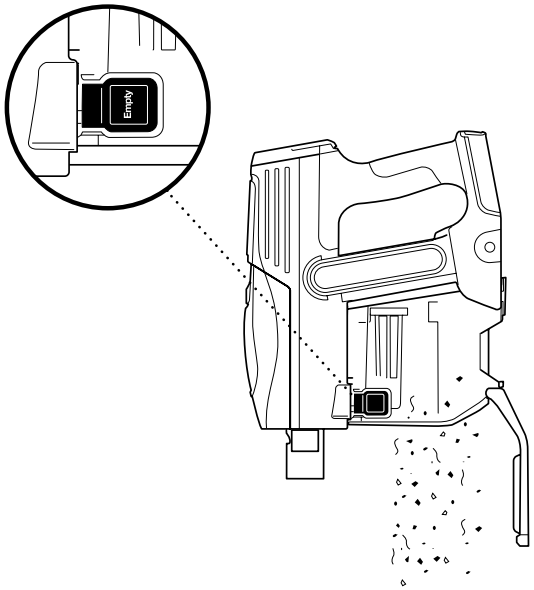

EMPTYING THE DUST CUP

1 To empty dust cup, first remove the handheld vacuum from the wand by pressing the Wand Release button and pulling up on the handheld vacuum. Position dust cup over a trash bin, then open the bottom of the dust cup by pressing the Dust Cup Release button on the side.

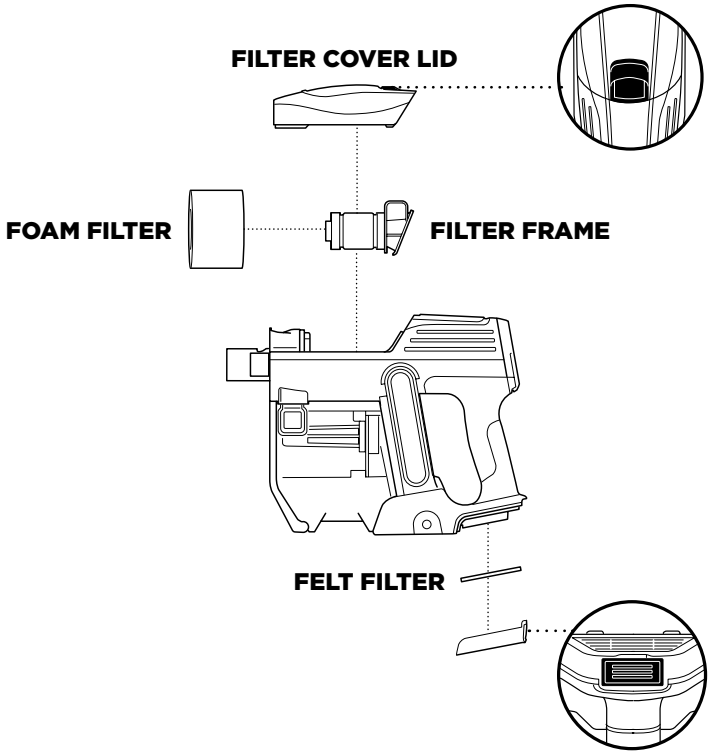

CLEANING THE FILTERS

1 To clean the foam filter, remove the filter cover lid on the top of the handheld vacuum and slide off the foam filter. Rinse foam filter with water. Tap loose dirt off filter between washes as needed. Once completely dry, reinsert the felt filter and close the filter cover lid.

2 To clean the felt filter, remove the cover on the bottom of the handheld vacuum by pressing the release button. Remove felt filter. Rinse with water. Once foam filter is completely dry, return it to the filter frame, then replace the filter frame and the filter cover.

WARNING: To reduce the risk of shock and unintended operation, turn off power and remove the ION Power Pack before servicing.

WARNING: When cleaning brushroll, be sure to not cut anything other than hair, string, fibers, or other debris.

TIP: Ensure the brushroll garage is completely sealed and closed before using.

NOTE: Heavy usage over time may require minimal upkeep in order to maintain your vacuum's appearance.

STEP 1

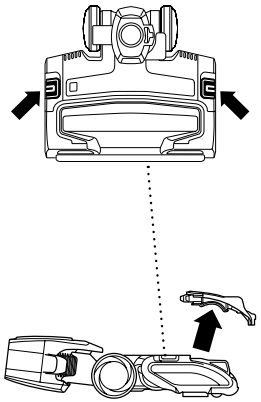

STEP 2

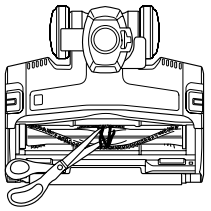

MAINTAINING THE BRUSHROLL

1. Open the brushroll garage by sliding both release buttons away from you, toward the back of the floor nozzle, then lifting off the garage lid. Remove any string, hair, or debris that may be wrapped around the brushroll by running scissors or the lower corner of the garage lid along the guide on the brushroll.
2. Close the brushroll garage by inserting the tabs on the lid into the slots on the floor nozzle, then pressing down on the lid, above the headlights, until both sides click into place.

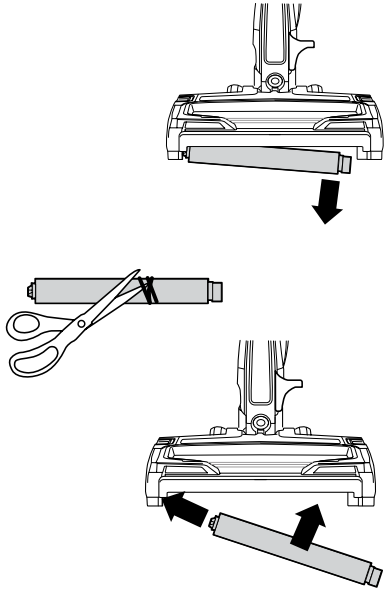

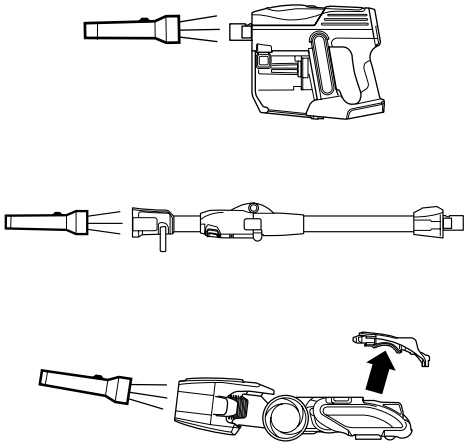

MAINTAINING THE SOFT ROLLER

1. Open the brushroll garage by sliding both release buttons away from you, toward the back of the floor nozzle, then lifting off the brushroll garage lid. Lift out the Soft Roller by the tab on the right side. Clean off any string, carpet fibers, or hair that may be wrapped around the Soft Roller, and remove debris from the roller housing.
2. Wash the Soft Roller as needed, using only water. Air-dry completely for at least 24 hours before returning it to the brushroll garage.
3. Reinsert the Soft Roller by sliding it into the front of the floor nozzle until it clicks into place. Close the brushroll garage by inserting the tabs on the garage lid into the slots on the floor nozzle, then pressing down on the lid, above the headlights, until both sides click into place.

CHECKING FOR BLOCKAGES: Handheld, Wand, and Floor Nozzle

1. Turn off vacuum and remove ION Power Pack.
2. Remove the wand from the handheld vacuum and check all intake openings to the dust cup.
3. Remove the floor nozzle from the wand and check the wand for blockages.
4. Tilt neck of floor nozzle back to straighten the airway to remove blockages.

TROUBLESHOOTING GUIDE

WARNING: To reduce the risk of shock and unintended operation, turn off power and remove the ION Power Pack before servicing.

Vacuum is not picking up debris, no suction or light suction.
(Refer to Maintenance section for more information.)

- Check filters to see if they need cleaning. Follow instructions for rinsing and completely air-drying the filters before reinserting in the vacuum.
- Dust cup may be full; empty dust cup.
- Check floor nozzle for blockages; clear blockages if required.
- Remove any string, carpet fibers, or hair that may be wrapped around the brushroll and Soft Roller or trapped behind the Soft Roller.
- Check connection between handvac and wand for blockages; clear blockages if required. If the issue persists, please contact Customer Service at 1-800-798-7398.

Vacuum lifts area rugs.

- Check that vacuum is in EXTEND RUNTIME mode. Take care when vacuuming area rugs or rugs with delicately sewn edges.
- Turn off the unit to disengage the brushroll and restart with the Power button.

Brushroll/Soft Roller does not spin.

- If Brushroll Indicator Light on the floor nozzle turns red, the brushroll and/or Soft Roller have stopped spinning. Immediately turn off and remove ION Power Pack from handheld vacuum and remove blockage before reconnecting and turning vacuum back on. If light turns green, the blockage has been successfully cleared. If it remains red, please contact Customer Service at 1-800-798-7398.
- If headlights are not illuminated, there is a connection issue between the handheld vacuum, wand, and nozzle. Try disconnecting and reattaching the pieces. If the headlights still do not illuminate, please contact Customer Service at 1-800-798-7398.

Vacuum turns off on its own.

There are several possible reasons for the vacuum turning off on its own, including blockages, ION Power Pack issues, and overheating. If vacuum turns off on its own, perform the following steps:

1. Check LED lights on ION Power Pack to see if it needs to be recharged. If power pack does not need charging, turn off vacuum and remove power pack.
2. Empty dust cup and clean filters (see Maintenance section).
3. Check wand, accessories, and inlet openings and remove any blockages.
4. Allow unit and ION Power Pack to cool for at least 45 minutes, until it returns to room temperature.
5. Return power pack to vacuum and press Power button.

Note: If vacuum still does not operate properly, contact Customer Service at 1-800-798-7398.

LED lights on ION Power Pack are flashing.

- If top 2 or bottom 2 LED lights are flashing (Fig. A, Fig. B), call Customer Service at 1-800-798-7398.
- Bottom LED light is flashing (Fig. C): ION Power Pack needs to be charged.
- Top and bottom LED lights are flashing (Fig. D): ION Power Pack temperature is not optimal, so charging is temporarily paused. Leave power pack plugged in and charging will resume soon.

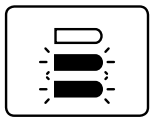
Fig. A

Fig. B

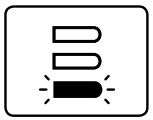
Fig. C

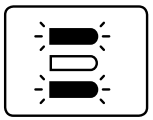
Fig. D

	LIGHT INDICATOR	WHAT IT MEANS
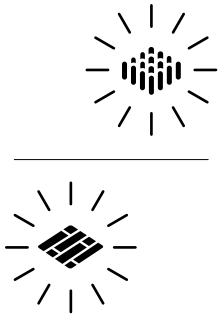	**FLOOR and CARPET LEDs alternate illuminating**	Unit temperature is high. Turn off vacuum. While unit is cooling, look for blockages and remove any that are found. Filters may also need to be cleaned.
	EXTEND RUNTIME and MAX POWER LEDs are flashing together	Blockage detected. Turn off unit and remove blockage.
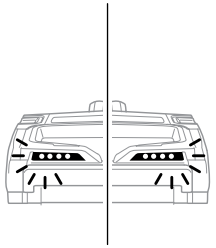	**Headlights aren't illuminating**	Brushroll garage is not properly closed. Close the garage by inserting the tabs on the garage lid into the slots in the floor nozzle, then pressing down on the lid, above the headlights, until both sides click into place.

For all other issues, please call Customer Service 1-800-798-7398.

FIVE (5) YEAR LIMITED WARRANTY

The 5-Year Limited Warranty applies to purchases made from authorized retailers of **SharkNinja Operating LLC**. Warranty coverage applies to the original owner and to the original product only and is not transferable. ION Power Pack is not covered by 5-year warranty (See battery warranty on next page).

SharkNinja warrants that the unit shall be free from defects in material and workmanship for a period of 5 years from the date of purchase when it is used under normal household conditions and maintained according to the requirements outlined in this instruction manual, subject to the following conditions and exclusions.

What is covered in my warranty?

1. The original unit and/or non-wearable components deemed defective, in SharkNinja's sole discretion, will be repaired or replaced for up to 5 years from the original purchase date.
2. In the rare event that a replacement unit is issued, the warranty coverage ends six months following the receipt date of the replacement unit or the remainder of the existing warranty, whichever is greater. If the unit is replaced, SharkNinja reserves the right to replace the unit with one of equal or greater value.

What is not covered in my warranty?

Our Customer Service/Product Specialists are available to provide all the warranty service options available to you, including the possibility of upgrading to our VIP Warranty Service Options for select product categories.

1. Normal wear and tear of wearable parts such as foam filters, HEPA filters, pads etc., which require regular maintenance and/or replacement to ensure the proper functioning of your unit are not covered by this warranty.
2. Any unit that has been tampered with or used for commercial purposes.
3. SharkNinja will cover the cost for the customer to send in the unit to us for repair or replacement. A fee of $19.95 for return shipping costs will be charged at the time of return shipment of the repaired or replacement unit.
4. Damage caused by misuse, abuse, or negligent handling, or damage due to mishandling in transit.
5. Consequential and incidental damages.
6. Defects caused by or resulting from damages from shipping or from repairs, service or alteration to the product or any of its parts which have been performed by a repair person not authorized by SharkNinja.
7. Products purchased, used or operated outside of North America.

Problems with your unit/How to get service

If your appliance fails to operate properly while in use under normal household conditions within the warranty period, visit sharkclean.com for product care/maintenance self-help. Our Customer Service and product specialists are also available at 1-800-798-7398 to assist with product support and warranty service options.

How to initiate a warranty claim

You can call 1-800-798-7398 to have a Customer Service specialist assist you. Please note you must call 1-800-798-7398 to initiate a warranty claim. Return and Packing Instruction information will be provided at that time.

For Customer Service hours, visit sharkclean.com

Replacement parts are available for purchase at sharkclean.com. For more information on which parts are classified as wearable and non-wearable, please visit sharkclean.com/warranty

This warranty gives you specific legal rights, and you also may have other rights that vary from state to state.

Some states do not permit the exclusion or limitation of incidental or consequential damages, so the above may not apply to you.

TWO (2) YEAR LIMITED BATTERY WARRANTY

The 2-Year Limited Warranty applies to purchases made from authorized retailers of **SharkNinja Operating LLC**. Warranty coverage applies to the original owner and to the original battery only and is not transferable.

SharkNinja warrants that the ION Power Pack shall be free from defects in material and workmanship for a period of 2 years from the date of purchase when it is used under normal household conditions and maintained according to the requirements outlined in this instruction manual, subject to the following conditions and exclusions.

What is covered in my warranty?

1. The original ION Power Pack, deemed defective, in SharkNinja's sole discretion, will be replaced for up to 2 years from the original purchase date.
2. In the rare event that a replacement battery is issued, the warranty coverage for the replacement battery ends six months following the receipt date of the replacement battery or the remainder of the existing warranty, whichever is greater.

What is not covered in my warranty?

Our Customer Service/Product Specialists are available to provide all the warranty service options available to you.

1. Normal wear and tear of ION Power Pack, which requires optimal temperature storage and operation to ensure the proper functioning of your battery, is not covered by this warranty.
2. Any battery that has been tampered with or used for commercial purposes.
3. Damage caused by misuse, abuse, or negligent handling, or damage due to mishandling in transit.
4. Consequential and incidental damages.
5. Defects caused by or resulting from damages from shipping or from repairs, service or alteration to the product or any of its parts which have been performed by a repair person not authorized by SharkNinja.
6. Products purchased, used or operated outside of North America.

Problems with your battery

If your ION Power Pack fails to operate properly while in use under normal household conditions within the warranty period, visit sharkclean.com for product care/maintenance self-help. Our Customer Service and product specialists are also available at 1-800-798-7398 to assist with product support and warranty service options.

SharkNinja will cover the cost for the customer to send in the battery to us for replacement. A fee of $19.95 for return shipping costs will be charged at the time of return shipment of the replacement battery.

How to initiate a warranty claim

You can call 1-800-798-7398 to have a Customer Service specialist assist you. Please note you must call 1-800-798-7398 to initiate a warranty claim.

For Customer Service hours, visit sharkclean.com

Replacement ION Power Packs are available for purchase at sharkclean.com/batteries.

This warranty gives you specific legal rights, and you also may have other rights that vary from state to state.

Some states do not permit the exclusion or limitation of incidental or consequential damages, so the above may not apply to you.

SharkNinja Operating LLC
US: Needham, MA 02494
CAN: Ville St-Laurent, QC H4S 1A7
1-800-798-7398
sharkclean.com

Illustrations may differ from actual product. We are constantly striving to improve our products; therefore the specifications contained herein are subject to change without notice.

SHARK is a registered trademark of SharkNinja Operating LLC.

DUOCLEAN, IONFLEX, MULTIFLEX, and SMART RESPONSE are trademarks of SharkNinja Operating LLC.

For SharkNinja U.S. Patent information, visit sharkninja.com/USPatents

© 2017 SharkNinja Operating LLC
IF200_Series_IB_E_170628_MP
PRINTED IN CHINA

@sharkcleaning