Shark

HYDROVAC™

MESSMASTER™

Cordless 3-in-1 Cleaner

WD260 Series

OWNER'S GUIDE

IMPORTANT SAFETY INSTRUCTIONS

FOR HOUSEHOLD USE ONLY READ ALL INSTRUCTIONS BEFORE USING THIS 3-IN-1 CLEANER

⚠ WARNING

To reduce the risk of fire, electric shock, injury, or property damage:

1. If the charging cord plug does not fit fully into the outlet, reverse the plug. If it still does not fit, contact a qualified electrician. **DO NOT** force into outlet or try to modify to fit.
2. To reduce the risk of shock and unintended operation, turn off power before servicing.
3. This 3-in-1 Cleaner consists of a motorized nozzle, main body, pole, and handle. These components contain electrical connections, electrical wiring, and moving parts that potentially present risk to the user.
4. Before each use, carefully inspect all parts for any damage. If a part is damaged, discontinue use.
5. Use only identical replacement parts.
6. Use only as described in this manual. **DO NOT** use the 3-in-1 Cleaner for any purpose other than those described in this manual.
7. **DO NOT** immerse or spray water on the body of the 3-in-1 Cleaner. To clean the surface, wipe with a dry cloth.
8. Keep the 3-in-1 Cleaner and the dock's cord out of reach of children. Do not allow the appliance to be used by children. Do not allow to be used as a toy. Close supervision is necessary when used near children.
9. This appliance can be used by persons with reduced physical, sensory, or mental capabilities or lack of experience or knowledge if they have been given supervision or instruction concerning use of the appliance in a safe way and understand the hazards involved. Cleaning and user maintenance shall not be done by children.
10. **DO NOT** handle plug or 3-in-1 Cleaner with wet hands.
11. **DO NOT** use without the dirty water tank, Clean Solution Tank, filter, brushroll, and brushroll cover in place.
12. Only use Shark® branded filters and accessories.
13. **DO NOT** put any objects into nozzle openings. **DO NOT** use with any opening blocked; keep free of dust, lint, hair, and anything that may reduce airflow.
14. **DO NOT** use if nozzle airflow is restricted. If the air paths or the motorized floor nozzle become blocked, turn the 3-in-1 Cleaner off. Remove all obstructions before you turn on the unit again.
15. Keep nozzle and all 3-in-1 Cleaner openings away from hair, face, fingers, uncovered feet, or loose clothing.
16. **DO NOT** use if 3-in-1 Cleaner is not working as it should, or has been dropped, damaged, left outdoors, or dropped into water.
17. Use extra care when cleaning on stairs.
18. **DO NOT** leave the 3-in-1 Cleaner unattended while powered on.
19. When using on carpet or flooring, always keep the 3-in-1 Cleaner moving over the carpet surface or flooring to avoid damaging the carpet fibers or flooring.
20. **DO NOT** place 3-in-1 Cleaner on unstable surfaces such as chairs or tables.
21. **DO NOT** use to pick up:
    a) Large objects
    b) Hard or sharp objects (nails, screws, or coins)
    c) Large quantities of dust (e.g., drywall dust).
    d) Smoking or burning objects (hot coals, cigarette butts, or matches)
    e) Flammable or combustible materials (lighter fluid, gasoline, or kerosene)
    f) Toxic materials (chlorine bleach, ammonia, or drain cleaner)
22. **DO NOT** use in the following areas:
    a) Poorly lit areas
    b) Outdoor areas
    c) Spaces that are enclosed and may contain explosive or toxic fumes or vapors (lighter fluid, gasoline, kerosene, paint, paint thinners, mothproofing substances, or flammable dust)
23. Turn off the 3-in-1 Cleaner before any adjustment, cleaning, maintenance or troubleshooting.
24. During cleaning or routine maintenance, **DO NOT** cut anything other than hair, fibers, or string wrapped around the brushroll
25. Allow all filters to air dry completely before replacing in the 3-in-1 Cleaner to prevent liquid from being drawn into electric parts.
26. **DO NOT** modify or attempt to repair the 3-in-1 Cleaner or the battery yourself.
27. Use only Shark brand cleaning fluids intended for use with this appliance to prevent internal component damage.

BATTERY PACK

28. The battery is the power source for the 3-in-1 Cleaner. Carefully read and follow all charging instructions.
29. To prevent unintentional starting, ensure the 3-in-1 Cleaner is powered off before picking up or carrying the 3-in-1 Cleaner. **DO NOT** carry the appliance with your finger on the power switch.
30. Use only Shark charger XDOCKWD200. Use of an incorrect charger may result in no charging, and/or unsafe conditions.
31. The battery pack is non-serviceable. Call consumer services with any questions and concerns.
32. Under abusive conditions, liquid may be ejected from the battery. Avoid contact with this liquid, as it may cause irritation or burns. If contact occurs, flush with water. If liquid contacts eyes, seek medical help.
33. Battery should not be stored at temperatures below 37.4° F (3° C) or above 104° F (40° C) to maintain long term battery life.
34. **DO NOT** charge battery at temperatures below 40° F (5° C) or above 104° F (40° C).
35. Store the appliance indoors. **DO NOT** use or store it below 37.4° F (3° C). Ensure the appliance is at room temperature before operating.
36. **DO NOT** expose the battery to fire or temperatures above 265° F (130° C) as it may cause explosion.

SAVE THESE INSTRUCTIONS

sharkclean.com

ASSEMBLY

1. Align the **Pole** with the opening in the **Main Body** and insert firmly until it clicks into place.

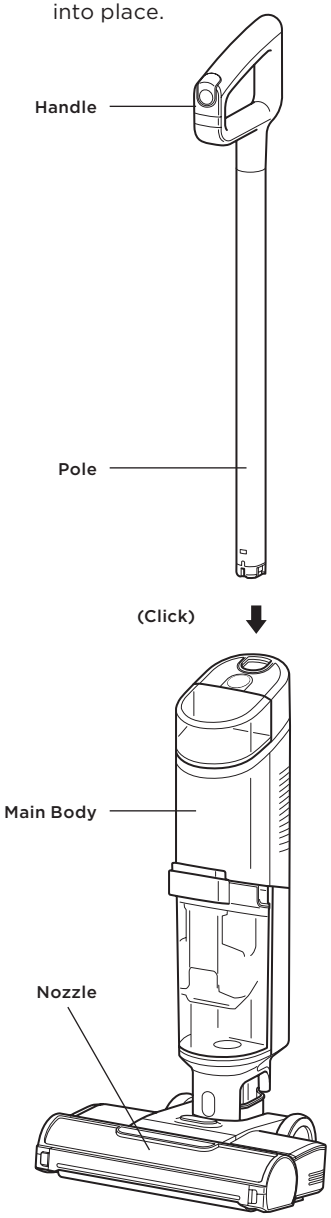

2. Place the **Dock** on the floor near a wall outlet and plug in the cord. Wind the remaining cord around the **Cord Wrap** on the back of the dock.

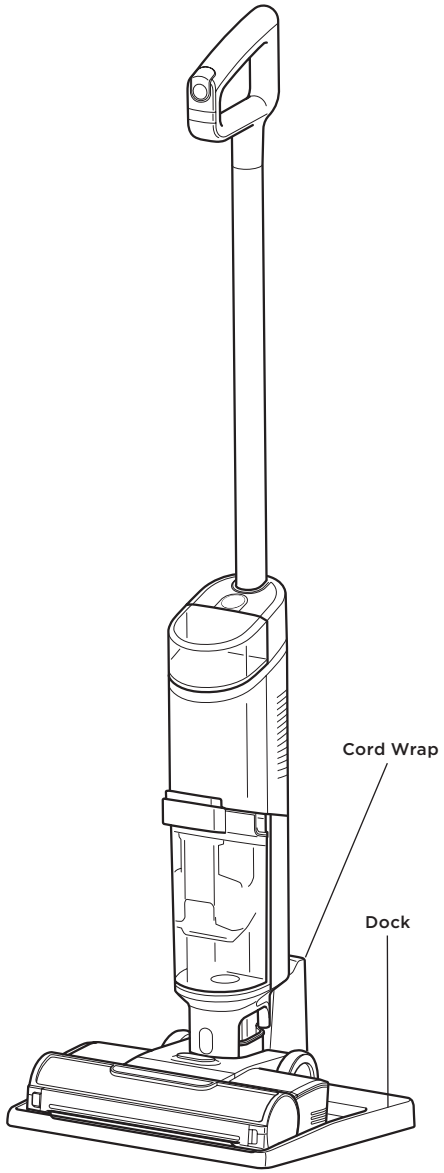

NOTE: When assembling your HydroVac, there may be a little water in or around the water tanks. This is because we test all our HydroVacs before you buy them to ensure the highest quality.

NOTE: To remove the handle, press the release button located on the back of the unit with a thin tool while pulling up on the handle.

LI-ION BATTERY

Prior to first use, charge the battery completely. A full charge takes approximately 4 hours.

LED BATTERY POWER AND CHARGING INDICATOR

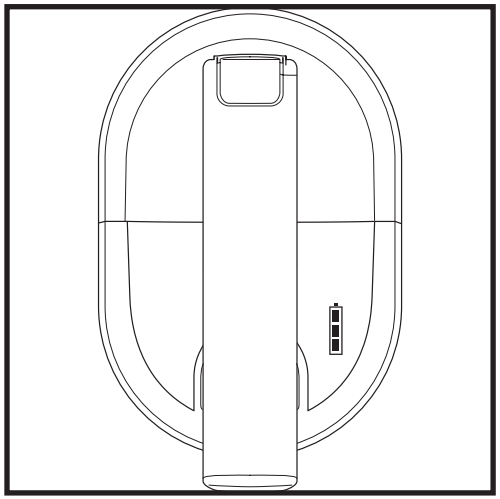

Charging

Low Charge

Mid Charge

Nearly Full

Full Charge

Note: Full Charge takes approximately 4 hours.

In Use

Full Charge

Mid Charge

Nearly Empty (Pulsing)

No Charge

NOTE: The Shark® battery, like all lithium-ion batteries, will naturally decrease in capacity over time from the 100% capacity of a new battery.

CHARGING ON THE DOCK

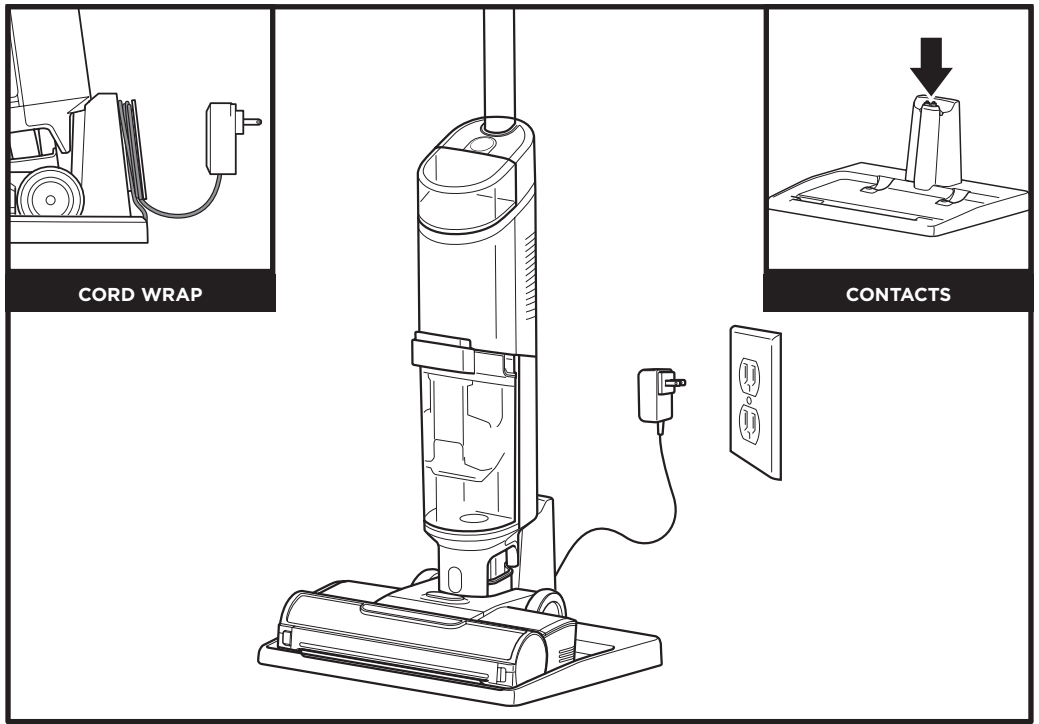

DOCK CHARGING

Charge the unit by placing it on the dock. Make sure the contacts on the body are aligned with the contacts on the charging dock.

The **Battery Icon** on the main body will illuminate when charging begins.

When charging is complete and you need to use the unit again, lift it off the dock.

NOTE: When docked properly, the charging lights on the Main Body will blink, indicating that charging has begun. When charging is complete, all three indicator lights will turn off.

NOTE: The main unit comes with a partial charge. For maximum runtime, charge fully before first use (approximately 4 hours). Leaving the unit charging will not damage battery life.

USING YOUR 3-IN-1 CLEANER

FILLING THE CLEAN SOLUTION TANK

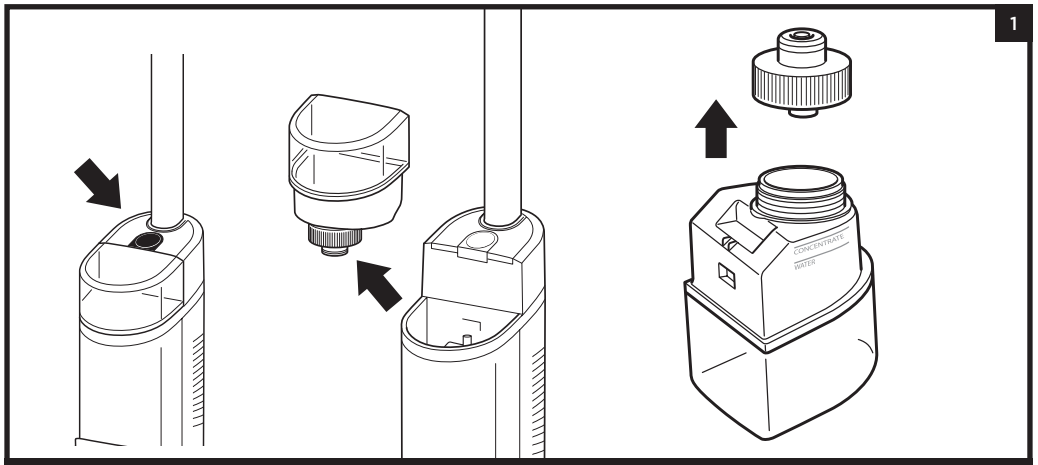

REMOVE THE CLEAN SOLUTION TANK

Press the release button and lift off the **Clean Solution Tank**.

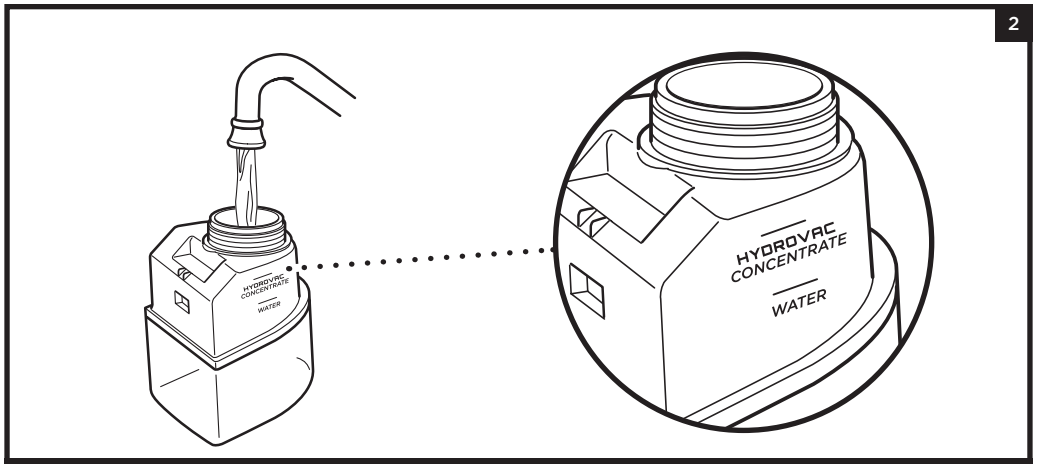

FILL THE CLEAN SOLUTION TANK

Unscrew the cap and add water to the tank, up to the WATER line. Next, add Shark HydroVac™ Multi-Surface Concentrate, filling to the HYDROVAC CONCENTRATE line. Replace the cap and reinsert the tank until it clicks into place. The top of the tank should be flush with the top of the body.

NOTE: Only use Shark HydroVac Multi-Surface Concentrate and water with this product.

NOTE: Be sure to not overfill the Clean Solution Tank with more HydroVac Multi Surface Concentrate than instructed, as this may clause streaking.

NOTE: Without sufficient water supply in the clean solution tank, HydroVac will not run.

USING YOUR 3-IN-1 CLEANER

CONTROLS

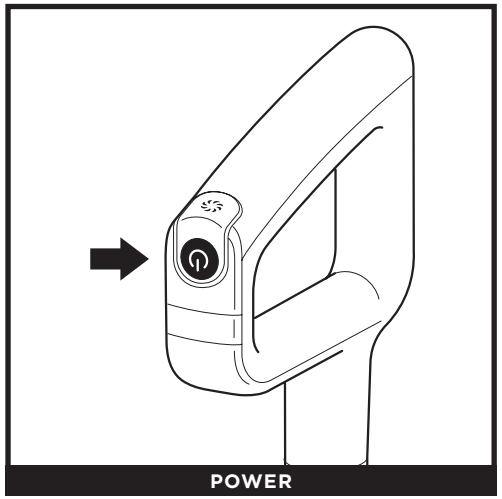

Press and release the **Power** button on the handle to turn on power. To turn off power, press the button again.

CLEANING MODES

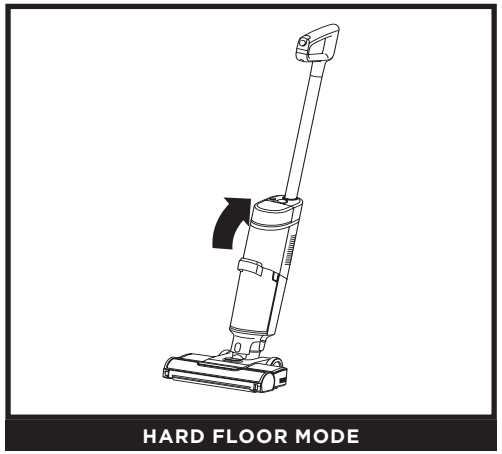

Use Hard Floor mode for powerful cleaning on bare floors. To activate Hard Floor mode, turn on the unit and tilt the handle back.

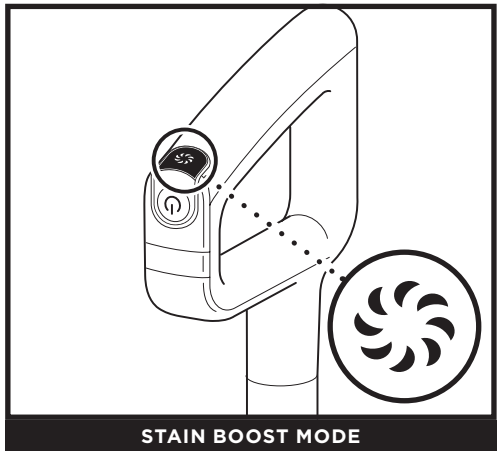

To clean stains, press the Stain Boost icon on top of the handle. The Stain Boost light on the main body will illuminate. To turn off Stain Boost mode and switch back to Hard Floor mode, press the button again.

NOTE: To prevent leakage, DO NOT place the main body on the floor. The nozzle should always be kept flat on the floor.
NOTE: If you encounter a difficult stain, use Stain Boost Mode for improved stain cleaning.
NOTE: If you encounter a stubborn odor on your floor or area rug, continue to clean in Stain Boost mode until the odor is gone.
NOTE: If your floors are cloudy, streaky, or spotty after cleaning, it may be due to accumulated soap or grease residue. The floor may require several cleanings with the Hydrovac.

MAINTAINING YOUR 3-IN-1 CLEANER

RINSE CYCLE

The Rinse Cycle automatically cleans the system and the brushroll.

Recommended after every use

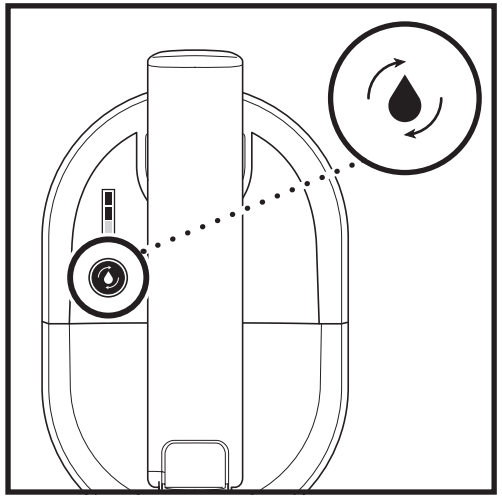

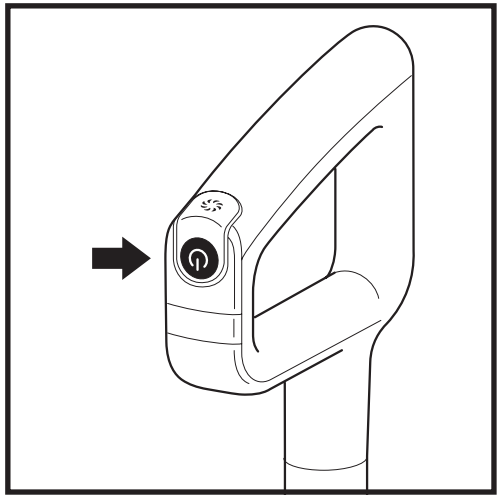

1. Place the unit on the charging dock.
2. Empty the **Dirty Water Tank** and make sure the clean solution tank is at least half full.
3. Press the **Power Button** to start the Rinse Cycle. The icon will pulse for the full 2-minute duration of the cycle.
4. **DO NOT** remove the unit from the dock during the Rinse Cycle. The icon will turn off when the cycle is complete.
5. Empty the dirty water tank.

See LED Glossary for more information on indicator lights during Rinse Cycle.

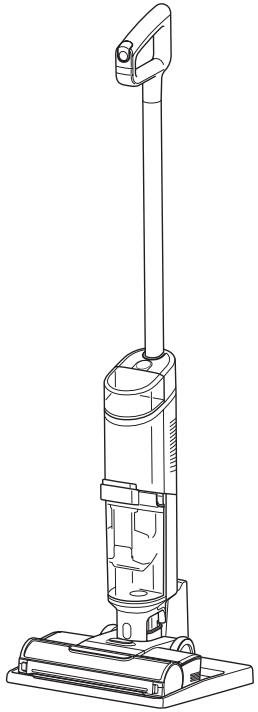

NOTE: Make sure the clean solution tank is at least half full and that the dirty water tank is empty before running the Rinse Cycle.

MANUALLY CLEANING THE BRUSHROLL

You can clean the brushroll by hand as an alternative to the Rinse Cycle, and to remove debris or hair wrapped around the brushroll.

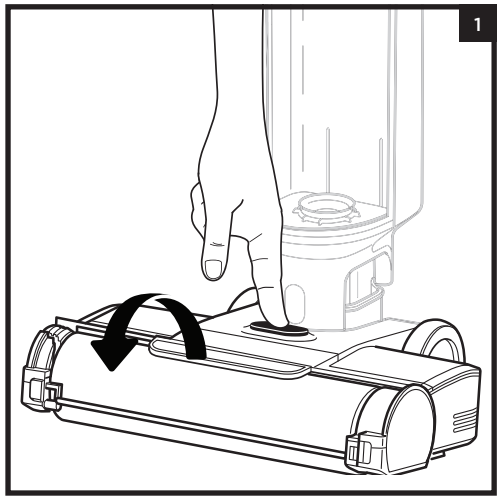

1. To access the brushroll, press the button on the top of the nozzle and lift off the brushroll cover.

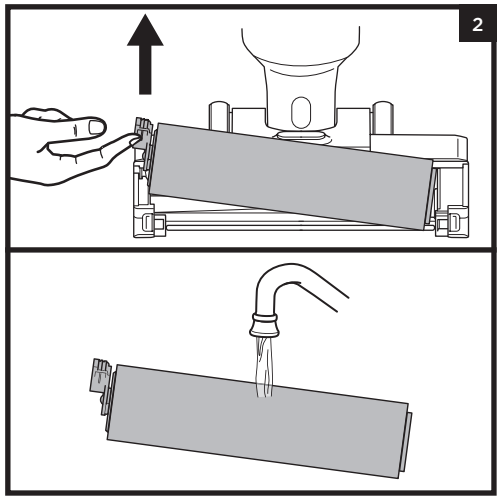

2. Remove the brushroll by pulling up on the pull tab on the left side of the nozzle. Wipe away any debris stuck on the back wall.
Wash thoroughly with warm water. Allow the brushroll to air-dry completely in a well-ventilated area for at least 24 hours.

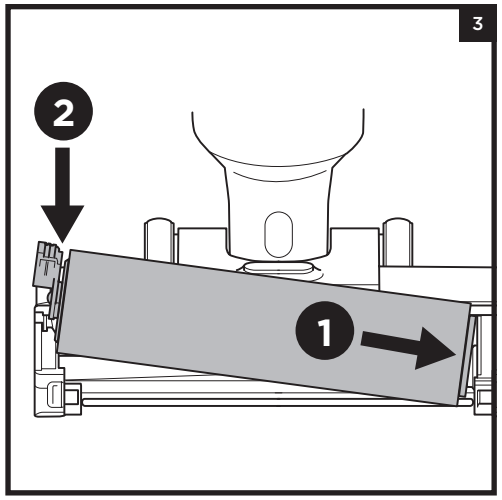

3. Reinsert the brushroll by lining up the grooves on the end of the brushroll with the helix on the inner right side of the nozzle, then press down on the left side of the brushroll. When properly installed, the brushroll tab will be flush with the left side of the nozzle

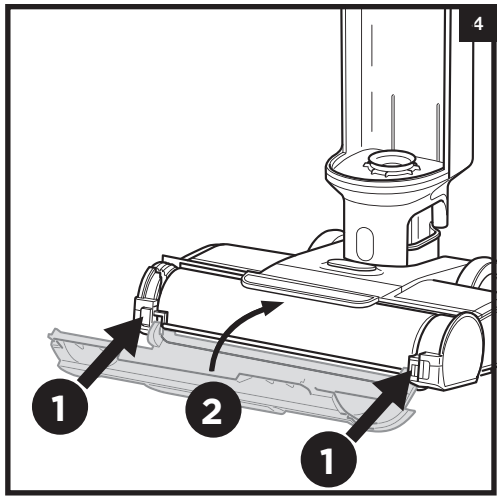

4. To reinstall the brushroll cover, insert the tabs on the cover into the slots on the nozzle. Press down on the cover until it clicks into place.

NOTE: Do not place brushroll in washing machine or dishwasher. Replace the brushroll after **6 months**.

CLEANING THE DIRTY WATER TANK

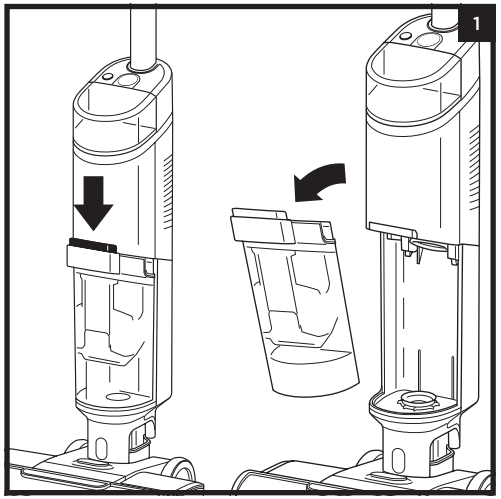

1. To remove the dirty water tank, press the release button and pull out the tank.

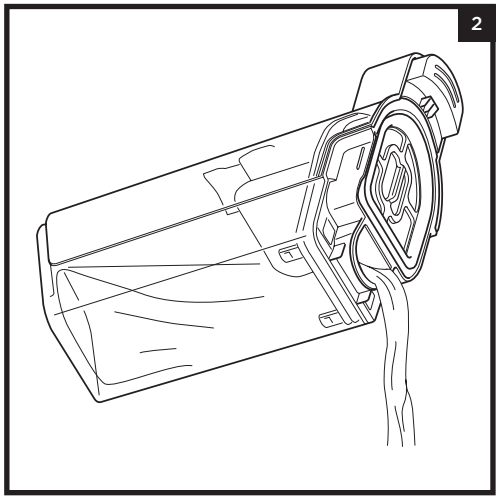

2. To dispose of liquid waste only, pour it out though the **Easy Pour spout** on the back of the dirty water tank.

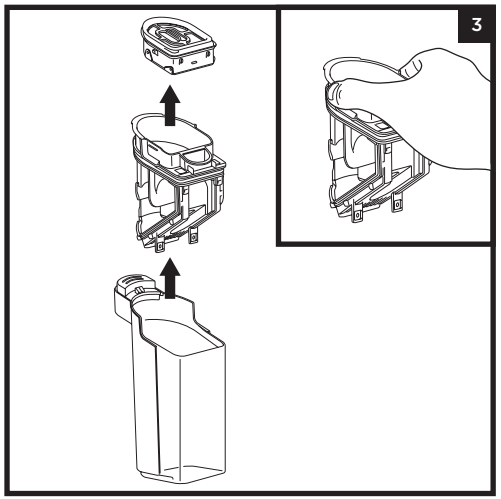

3. To dispose of solid debris, lift out the **Solids Separator**. Grasp the recessed areas on the sides of the separator and lift it out. Empty the solid debris into the trash. If any liquid waste remains in the tank, pour it down a drain. To clean, rinse the separator and the tank with water.

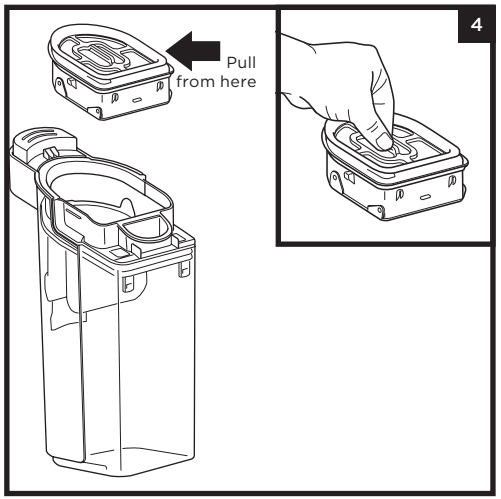

4. Clean the filter housing and the foam filter after every use. Pull out the foam filter and hand-wash with warm water and soap.
Allow the foam filter to air-dry completely in a well-ventilated area for **24 hours** before reinstalling back into the unit.

NOTE: Replace the filter every **6 Months**.

NOTE: Do not place dirty water tank in washing machine or dishwasher.

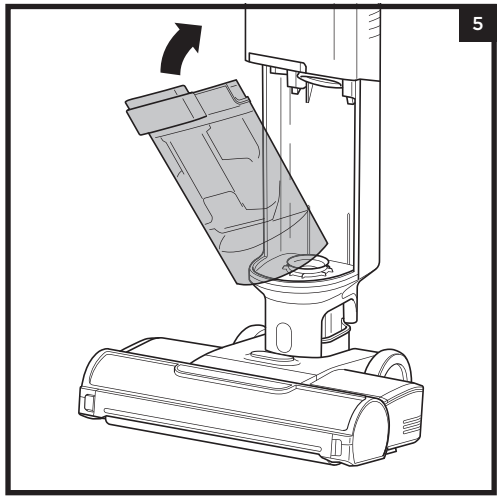

5. After cleaning the dirty water tank and the solids separator, allow them to air-dry in a well-ventilated area for at least 24 hours. To reinstall the tank, insert the bottom into the opening in the main body, then tilt the tank back until it clicks into place.

MAINTAINING YOUR 3-IN-1 CLEANER

CHECKING FOR BLOCKAGES

If you run over a hard or sharp object or notice a noise change while using your unit, check for blockages or objects caught in the brushroll, nozzle chamber, or inlet hose.

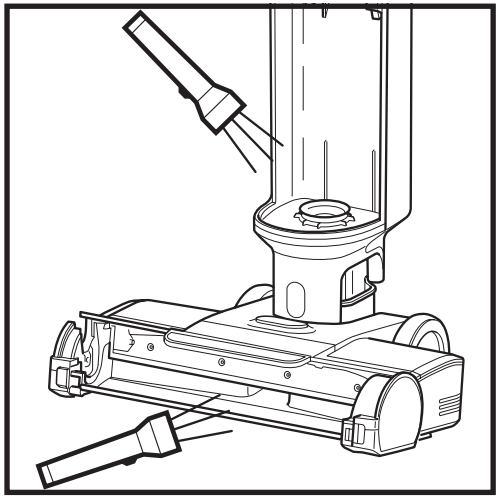

1. Turn off the power.

2. Remove the brushroll cover, brushroll, and dirty water tank.

3. Check the openings and remove all debris.

4. When finished, reinstall the brushroll and the cover.

ORDERING REFILLS AND PARTS

Replace the filter and brushroll every 6 months.

Only use Shark HydroVac™ Concentrate or water with this product.

To order brushrolls, filters, and Shark HydroVac Multi-Surface Concentrate, please visit sharkclean.com or scan the QR code below.

LED GLOSSARY

LED GLOSSARY

SCENARIO	VISUAL	DETAILS
UNIT IS IN USE		
Single battery icon is **on.**	Solid.	Battery low. Note - you will not be able to run a Rinse Cycle.
Rinse icon is **pulsing.**	Pulsing	Place unit on dock while Rinse icon is pulsing. Press the power button to run Rinse Cycle.
Single battery icon is **pulsing.**	Pulsing	Battery is close to running out.
Rinse icon has turned **off.**	Off	Insufficient battery life to run Rinse Cycle after use.
UNIT IS PLACED ON THE DOCK		
Battery icons are pulsing.	Pulsing	Unit is charging.
Rinse icon is on.	On	There is sufficient battery life to run a Rinse Cycle. Press the power button to run a Rinse Cycle.
Rinse icon is off.	Off	There is not sufficient battery life to run Rinse Cycle. Wait until Rinse icon turns on to run a Rinse Cycle.
Power button is pressed to activate Rinse Cycle. Battery icons and Rinse icon flash three times.	Flash ×3	Unit is charging. There is not sufficient battery life to run a Rinse Cycle. Wait until Rinse icon turns on to run a Rinse Cycle.
Power button is pressed to activate Rinse Cycle. Rinse icon is pulsing.	Pulsing	Rinse Cycle is running. Rinse icon will turn off when cycle is complete. Battery icons will turn on and unit will begin charging.
RINSE CYCLE IS IN PROCESS; RINSE CYCLE PAUSES		
Rinse icon is flashing. Blue water droplet icon is flashing.	Flashing	Clean solution tank is empty. Fill clean solution tank and press the power button to resume Rinse Cycle.
Rinse icon is flashing. Red water droplet icon is flashing.	Flashing	Dirty water tank is full. Empty dirty water tank and press the power button to resume Rinse Cycle.
UNIT IS IN USE; CLEANING FUNCTIONS TURN OFF		
Blue water droplet icon is flashing.	Flashing	Clean solution tank is empty. Fill clean solution tank and press the power button to resume cleaning.
Red water droplet icon is flashing.	Flashing	Dirty water tank is full. Empty dirty water tank. Press the power button, resume cleaning. *If this is a false error, remove the solids separator and clean completely. Allow part to dry for 24 hours or dry manually.
Red water droplet icon is flashing. Red Stain Boost icon is flashing.	Flashing	Brushroll cover has been removed. Attach brushroll cover. Press the power button to resume cleaning.
Red water droplet icon is flashing. Red Stain Boost icon is flashing.	Flashing out of sync	Brushroll is jammed. Remove brushroll cover and brushroll. Remove any object that may be causing the brushroll to jam. Press the power button resume cleaning.

sharkclean.com

THREE (3) YEAR LIMITED WARRANTY

The Three (3) Year Limited Warranty applies to purchases made from authorized retailers of **SharkNinja Operating LLC.** Warranty coverage applies to the original owner and to the original product only and is not transferable.

SharkNinja warrants that the unit shall be free from defects in material and workmanship for a period of three (3) years from the date of purchase when it is used under normal household conditions and maintained according to the requirements outlined in the Owner's Guide, subject to the following conditions and exclusions:

What is covered by this warranty?

1. The original unit and/or non-wearable parts deemed defective, in SharkNinja's sole discretion, will be repaired or replaced up to three (3) years from the original purchase date.
2. In the event a replacement unit is issued, the warranty coverage ends six (6) months following the receipt date of the replacement unit or the remainder of the existing warranty, whichever is later. SharkNinja reserves the right to replace the unit with one of equal or greater value.

What is not covered by this warranty?

1. Normal wear and tear of wearable parts (such as Shark Cleaner, Pad, etc.), which require regular maintenance and/or replacement to ensure the proper functioning of your unit, are not covered by this warranty. Replacement parts are available for purchase at **sharkaccessories.com**.
2. Any unit that has been tampered with or used for commercial purposes.
3. Damage caused by misuse (e.g., not cleaning the filters or not removing debris from the brushroll), abuse, negligent handling, failure to perform required maintenance, or damage due to mishandling in transit.
4. Consequential and incidental damages.
5. Defects caused by repair persons not authorized by SharkNinja. These defects include damages caused in the process of shipping, altering, or repairing the SharkNinja product (or any of its parts) when the repair is performed by a repair person not authorized by SharkNinja.
6. Products purchased, used, or operated outside North America.

How to get service

If your appliance fails to operate properly while in use under normal household conditions within the warranty period, visit **sharkclean.com/support** for product care and maintenance self-help. Our Customer Service Specialists are also available at **1-800-798-7398** to assist with product support and warranty service options, including the possibility of upgrading to our VIP warranty service options for select product categories. So we may better assist you, please register your product online at registeryourshark.com and have the product on hand when you call.

SharkNinja will cover the cost for the customer to send in the unit to us for repair or replacement. A fee of $25.95 (subject to change) will be charged when SharkNinja ships the repaired or replacement unit.

How to initiate a warranty claim

You must call **1-800-798-7398** to initiate a warranty claim. You will need the receipt as proof of purchase. We also ask that you register your product online at **registeryourshark.com** and have the product on hand when you call, so we may better assist you. A Customer Service Specialist will provide you with return and packing instruction information.

How state law applies

This warranty gives you specific legal rights, and you also may have other rights that vary from state to state. Some states do not permit the exclusion or limitation of incidental or consequential damages, so the above may not apply to you.

THREE (3) YEAR LIMITED BATTERY WARRANTY

The Three (3) Year Limited Warranty applies to purchases made from authorized retailers of **SharkNinja Operating LLC.** Warranty coverage applies to the original owner and to the original product only and is not transferable.

SharkNinja warrants that the unit shall be free from defects in material and workmanship for a period of three (3) years from the date of purchase when it is used under normal household conditions and maintained according to the requirements outlined in the Owner's Guide, subject to the following conditions and exclusions:

What is covered by this warranty?

1. The original battery deemed defective, in SharkNinja's sole discretion, will be replaced up to three (3) years from the original purchase date.
2. In the event a replacement battery is issued, the warranty coverage ends six (6) months following the receipt date of the replacement battery or the remainder of the existing warranty, whichever is later. SharkNinja reserves the right to replace the unit with one of equal or greater value.

What is not covered by this warranty?

1. Normal wear and tear of the battery, which requires optimal temperature storage and operation to ensure its proper functioning.
2. A battery that has been tampered with or used for commercial purposes.
3. Damage caused by misuse (e.g., exposing battery to liquids or extreme hot and/or cold temperatures), abuse, negligent handling, failure to perform required maintenance, or damage due to mishandling in transit.
4. Consequential and incidental damages.
5. Defects caused by repair persons not authorized by SharkNinja. These defects include damages caused in the process of shipping, altering, or repairing the SharkNinja product (or any of its parts) when the repair is performed by a repair person not authorized by SharkNinja.
6. Products purchased, used, or operated outside North America.

How to get service

If your battery fails to operate properly while in use under normal household conditions within the warranty period, visit **sharkclean.com/support** for product care and maintenance self-help. Our Customer Service Specialists are also available at **1-800-798-7398** to assist with product support and warranty service options. So we may better assist you, please register your product online at **registeryourshark.com** and have the product on hand when you call.

SharkNinja will cover the cost for the customer to send in the unit to us for replacement. A fee of $20.95 (subject to change) will be charged when SharkNinja ships the replacement unit.

How to initiate a warranty claim

You must call **1-800-798-7398** to initiate a warranty claim. You will need the receipt as proof of purchase. We also ask that you register your product online at **registeryourshark.com** and have the product on hand when you call, so we may better assist you. A Customer Service Specialist will provide you with return and packing instruction information when you call. A Customer Service Specialist will provide you with return and packing instruction information.

How state law applies

This warranty gives you specific legal rights, and you also may have other rights that vary from state to state. Some states do not permit the exclusion or limitation of incidental or consequential damages, so the above may not apply to you.

NOTES

REGISTER YOUR PURCHASE

registeryourshark.com

RECORD THIS INFORMATION

Model Number: _____

Date Code: _____

Date of Purchase: _____
(Keep receipt)

Store of Purchase: _____

TIP: You can find the model and serial numbers on the QR code label on the bottom of the back of the 3-in-1 Cleaner.

TECHNICAL SPECIFICATIONS

Voltage: 21.6V ⎓

BATTERY REMOVAL AND DISPOSAL

This product uses a lithium-ion rechargeable and recyclable battery. When the battery no longer holds a charge, it should be removed from the unit and recycled. DO NOT incinerate or compost the battery.

When your lithium-ion battery needs to be replaced, dispose of it or recycle it in accordance with local ordinances or regulations. In some areas, it is illegal to place spent lithium-ion batteries in the trash or in a municipal solid waste stream. Return spent battery to an authorized recycling center or to retailer for recycling. Contact your local recycling center for information on where to drop off the spent battery.

The RBRC™ (Rechargeable Battery Recycling Corporation) seal on the lithium-ion battery indicates that the costs to recycle the battery at the end of its useful life have already been paid by SharkNinja. In some areas, it is illegal to place spent lithium-ion batteries in the trash or municipal solid waste stream and the RBRC program provides an environmentally conscious alternative.

RBRC, in cooperation with SharkNinja and other battery users, has established programs in the United States and Canada to facilitate the collection of spent lithium-ion batteries. Help protect our environment and conserve natural resources by returning the spent lithium-ion battery to an authorized SharkNinja service center or to your local retailer for recycling. You may also contact your local recycling center for information on where to drop off the spent battery, or call 1-800-798-7398.

Note:

This equipment has been tested and found to comply with the limits for a Class B digital device, pursuant to part 15 of the FCC Rules. These limits are designed to provide reasonable protection against harmful interference in a residential installation. This equipment generates, uses and can radiate radio frequency energy and, if not installed and used in accordance with the instructions, may cause harmful interference to radio communications. However, there is no guarantee that interference will not occur in a particular installation. If this equipment does cause harmful interference to radio or television reception, which can be determined by turning the equipment off and on, the user is encouraged to try to correct the interference by one or more of the following measures:

- Reorient or relocate the receiving antenna.
- Increase the separation between the equipment and receiver.
- Connect the equipment into an outlet on a circuit different from that to which the receiver is connected.
- Consult the dealer or an experienced radio/TV technician for help.

This device complies with Part 15 of the FCC Rules. Operation is subject to the following two conditions:

1. This device may not cause harmful interference, and
2. This device must accept any interference received, including interference that may cause undesired operation.

Caution: Any changes or modifications to this unit not expressly approved by the party responsible for compliance could void the user's authority to operate the equipment.

All testing on carpet (e.g., per ASTM-F608) shall be conducted in Stain Boost mode.

PLEASE READ CAREFULLY AND KEEP FOR FUTURE REFERENCE.

This Owner's Guide is designed to help you get a complete understanding of your new Shark HydroVac™ MessMaster™ Cordless 3-in-1 Cleaner.

SharkNinja Operating LLC
US: Needham, MA 02494
CAN: Ville St-Laurent, QC H4S 1A7

1-800-798-7398
sharkclean.com

Illustrations may differ from actual product. We are constantly striving to improve our products, therefore the specifications contained herein are subject to change without notice.

This product may be covered by one or more U.S. patents. See sharkninja.com/patents for more information.

© 2024 SharkNinja Operating LLC. SHARK is a registered trademark of SharkNinja Operating LLC. MESSMASTER and SHARK HYDROVAC are trademarks of SharkNinja Operating LLC. RBRC is a trademark of Rechargeable Battery Recycling Corporation.

@sharkcleaning