Shark®

PowerDetect Cordless Vacuum

IP1000 Series

OWNER'S GUIDE

THANK YOU
for purchasing the Shark Power Detect Cordless Vacuum.

TIP: You can find the model and serial numbers on the QR code label located on the back of your unit.

TIP: You can locate the date code on one of the prongs of the power cord plug.

REGISTER YOUR PURCHASE

TO BENEFIT FROM YOUR PRODUCT'S EXTENDED GUARANTEE, SIMPLY REGISTER YOUR PURCHASE AT:

sharkclean.co.uk/register-guarantee

+44 (0)800 862 0453

Scan QR code using mobile device

Please note, products purchased directly from Shark are automatically registered.

Benefits of registering your product and creating an account:

- Get easier, faster product support and access to guarantee information
- Access troubleshooting and product care instructions
- Be among the first to know about exclusive product promotions

RECORD THIS INFORMATION

Model Number: _____

Serial Number: _____

Date Code: _____

Date of Purchase (Keep Receipt): _____

Store of Purchase: _____

TECHNICAL SPECIFICATIONS

Voltage:	21.6V
Body Motor Watts:	380W
Nozzle Watts:	120W

PLEASE READ CAREFULLY AND KEEP FOR FUTURE REFERENCE.

This instruction manual is designed to help you get a complete understanding of your new Shark Power Detect Cordless Vacuum.

If you have any questions, please call the customer service line on +44 (0)800 862 0453.

CONTENTS

Product Registration 2

Important Safety Instructions 4

Assembling your Shark Power Detect Vacuum Cleaner 6

Charging Your LI-ION Battery 7

Using Your Vacuum 9

Controls And Cleaning Modes 9
Detect Technology Explained 10
Flexology and Storage 11
Above-Floor Cleaning 11

Maintaining your Vacuum Cleaner 12

Emptying the Handheld Vacuum Dust Cup 12
Filter Cleaning 13
Cleaning Dust Cup 12
Nozzle Maintenance 14
Cleaning The Sensors 15
Checking For Blockages In The Vacuum 16

Troubleshooting 17

Additional Accessories Available 18

Manufacturer's Guarantee 19

This marking indicates that this product should not be disposed with other household wastes. To prevent possible harm to the environment or human health from uncontrolled waste disposal, recycle it responsibly to promote the sustainable reuse of material sources. To return your used device, please use the return and collection systems or contact the retailer where this product was purchased. They can take this product for environmentally safe recycling.

IMPORTANT SAFETY INSTRUCTIONS

FOR HOUSEHOLD USE ONLY • PLEASE READ ALL INSTRUCTIONS BEFORE USING THIS VACUUM.

To reduce the risk of shock and unintended operation, turn off power and remove the ION Power Pack battery before servicing.

NOTE: If you have delicate or wool carpets, particularly loop pile, please try the vacuum on a hidden area first to ensure the spinning brush-rolls do not damage or unpick carpet fibres.

⚠ WARNING

REDUCE THE RISK OF FIRE, ELECTRIC SHOCK, INJURY, OR PROPERTY DAMAGE:

1. This vacuum consists of a motorised nozzle, wand, and handheld vacuum. These components contain electrical connections, electrical wiring, and moving parts that potentially present risk to the user.

2. Before each use, carefully inspect all parts for any damage. If a part is damaged, discontinue use.

3. Use only identical replacement parts.

4. This vacuum contains no serviceable parts.

5. Use only as described in this manual. **DO NOT** use the vacuum for any purpose other than those described in this manual.

6. With the exception of the filters and dust cup, **DO NOT** expose any parts of the vacuum to water or other liquids.

7 **DO NOT** allow the appliance to be used by children. Keep the appliance and its cord out of reach of children. Do not allow to be used as a toy. Close supervision is necessary when used near children.

GENERAL USE

8 This appliance can be used by persons with reduced physical, sensory or mental capabilities or lack of experience and knowledge if they have been given supervision or instruction concerning use of the appliance in a safe way and understand the hazards involved. Cleaning and user maintenance should not be done by children.

9 Always turn off the vacuum before connecting or disconnecting any current carrying hoses, motorised nozzles, chargers, batteries, or other electrical or mechanical parts.

10 **DO NOT** handle plug or vacuum with wet hands.

11 **DO NOT** use without dust cup, filters, and brush-roll in place.

12 Only use Shark branded filters and accessories. Damage caused by non-Shark filters and accessories may not be covered by the guarantee.

13 **DO NOT** put any objects into nozzle or accessory openings. **DO NOT** use with any opening blocked; keep free of dust, lint, hair, and anything that may reduce airflow.

14 **DO NOT** use if nozzle or accessory airflow is restricted. If the air paths or the motorised floor nozzle become blocked, turn the vacuum off. Remove all obstructions before you turn on the unit again.

15 Keep nozzle and all vacuum openings away from hair, face, fingers, uncovered feet, or loose clothing.

16 **DO NOT** use if vacuum is not working as it should, or has been dropped, damaged, left outdoors, or dropped into water.

17 Use extra care when cleaning on stairs.

18 **DO NOT** leave the vacuum unattended while powered on.

19 When powered on, keep the vacuum moving over the carpet surface at all times to avoid damaging the carpet fibres.

20 If you have delicate or wool carpets, particularly loop pile, please try the vacuum on a hidden area first to ensure the spinning brush-rolls do not damage or unpick carpet fibres.

21 **DO NOT** use to pick up:
- **a)** Liquids
- **b)** Large objects
- **c)** Hard or sharp objects (glass, nails, screws, or coins)
- **d)** Large quantities of dust (including drywall, fireplace ash, or embers). **DO NOT** use as an attachment to power tools for dust collection.
- **e)** Smoking or burning objects (hot coals, cigarette butts, or matches)
- **f)** Flammable or combustible materials (lighter fluid, petrol, or kerosene)
- **g)** Toxic materials (chlorine bleach, ammonia, or drain cleaner)

22 **DO NOT** use in the following areas:
- **a)** Wet or damp surfaces
- **b)** Outdoor areas
- **c)** Spaces that are enclosed and may contain explosive or toxic fumes or vapours (lighter fluid, petrol, kerosene, paint, paint thinners, mothproofing substances, or flammable dust)

23 Turn off the vacuum before plugging in or unplugging the charger.

24 Turn off the vacuum before any adjustment, cleaning, maintenance or troubleshooting.

25 During cleaning or routine maintenance, **DO NOT** cut anything other than hair, fibres, or string wrapped around the brush-roll.

26 Allow all filters to air-dry completely before replacing in the vacuum to prevent liquid from being drawn into electric parts.

27 **DO NOT** modify or attempt to repair the vacuum or the battery yourself, except as indicated in this manual. **DO NOT** use the battery or vacuum if it has been modified or damaged. Damaged or modified batteries may exhibit unpredictable behavior resulting in fire, explosion or risk of injury.

28 Turn off all controls before unplugging.

29 Always turn off this appliance before connecting or disconnecting motorised nozzle or hand tool.

30 If the supply cord is damaged, it must be replaced by the manufacturer, its service agent or similarly qualified persons in order to avoid a hazard.

31 BATTERY PACK

32. The battery is the power source for the vacuum. Carefully read and follow all charging instructions.

33. To prevent unintentional starting, ensure the vacuum is powered off before picking up or carrying the vacuum. **DO NOT** carry the appliance with your finger on the power switch.

34. For IP1000 Series, use only with DK30A-263100H-B or YLJX2I-U263100 charger.

35. Keep the battery away from all metal objects such as paper clips, coins, keys, nails, or screws. Shorting the battery terminals increases the risk of fire or burns.

36. Under abusive conditions, liquid may be ejected from the battery. Avoid contact with this liquid, as it may cause irritation or burns. If contact occurs, flush with water. If liquid contacts eyes, seek medical help.

37. Battery should not be stored at temperatures below 3°C (37.4°F) or above 40°C (104°F) to maintain long-term battery life.

38. **DO NOT** charge battery at temperatures below 5°C (40°F) or above 40°C (104°F). Charging improperly or at temperatures outside of the specified range may damage the battery and increase the risk of fire.

39. Store the appliance indoors.

40. **DO NOT** expose the battery to fire or temperatures above 130°C (265°F) as it may explode.

41. Use appliances only with specifically designated battery packs. Use of any other battery packs may create a risk of injury and fire.

42. Disconnect the battery pack from the appliance before making any adjustments, changing accessories, or storing appliance. Such preventive safety measures reduce the risk of starting the appliance accidentally.

43. Always ensure that the rechargeable battery is removed from the appliance before inserting into the battery charging sleeve.

44. For IP1000 Series, use only Shark battery pack XBATR640EU (21.6V 3750mAh 81wh).

ASSEMBLY (IP1000 SERIES)

1. Slide the **Wand** onto the neck of the **Floor Nozzle** until it clicks into place.
2. Align the **Hand Vacuum** nozzle opening with the top of the wand and slide it on until it clicks into place.

For proper operation, ensure all components are completely connected and clicked into place.

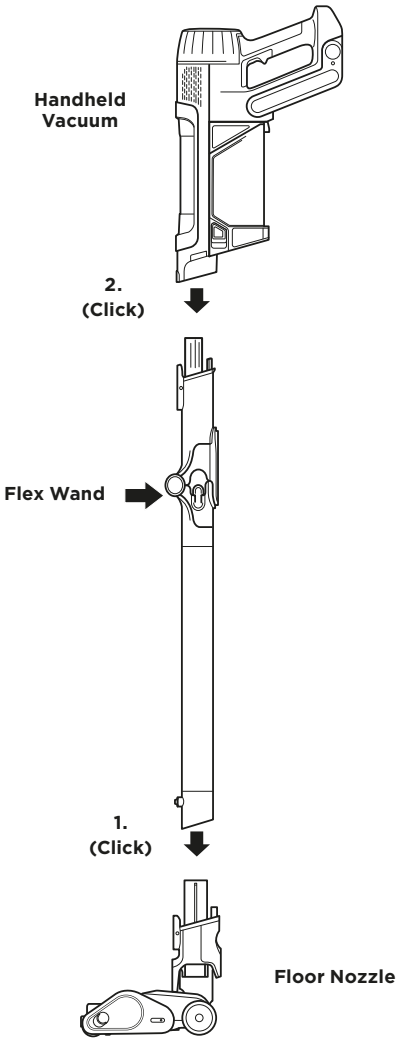

CHARGING YOUR LI-ION BATTERY

Prior to first use, charge the battery completely. A full charge takes approximately 6 hours.

RUNTIMES PER FULLY CHARGED BATTERY

With a full charge, the unit will have up to a 70-minute runtime. Visit **support.sharkclean.co.uk** online for more information.

LED BATTERY POWER AND CHARGING INDICATORS

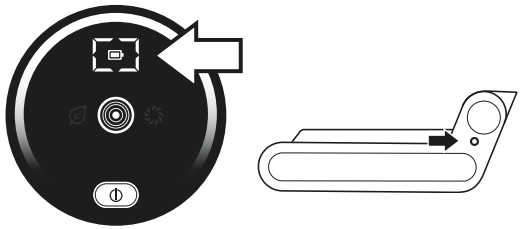

NOTE: Battery consumption will vary depending on the mode being used:

ECO – Maximum Runtime, saves battery power

AUTO – Optimises suction and power for maximum cleaning

BOOST – Maximises suction. Uses the most batter power

Charging

LED on the battery pack will pulse yellow when reaching 0-75% charge.

LED on the battery pack will pulse green from 75% - 100% charge.

White LED the battery pack is fully charged.

NOTE: *Full charge takes approximately 6 hours.*

Additional Notes
1. LEDs turn off once the battery is fully charged.
2. Unit will not power on when charger is connected.

In Use

Full Charge | Mid Charge | Low Charge | No Charge

RECYCLING THE LI-ION BATTERY

When the Shark Li-ion battery needs to be replaced, dispose of it or recycle it in accordance with local ordinances or regulations. In some areas, it is illegal to place spent lithium-ion batteries in the standard rubbish bin. Return spent batteries to an authorised recycling centre or to the retailer for recycling. Contact your local recycling centre for information on where to drop off the spent battery.

NOTE: The Shark battery, like all lithium-ion batteries, will naturally decrease in capacity over time from the 100% capacity of a new battery.

CHARGING YOUR LI-ION BATTERY

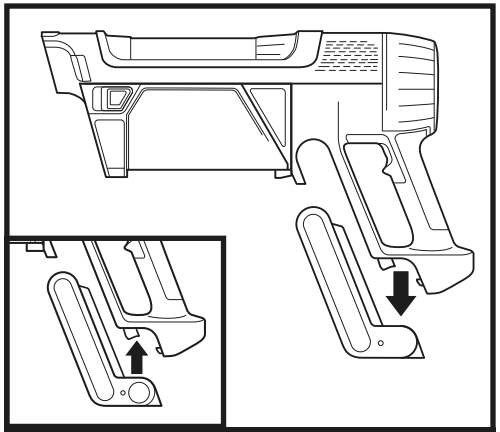

BATTERY REMOVAL

To remove the battery from the vacuum, press the release button on the battery and slide out of the handle compartment. To reinstall, slide the Battery back into the compartment until it clicks into place.

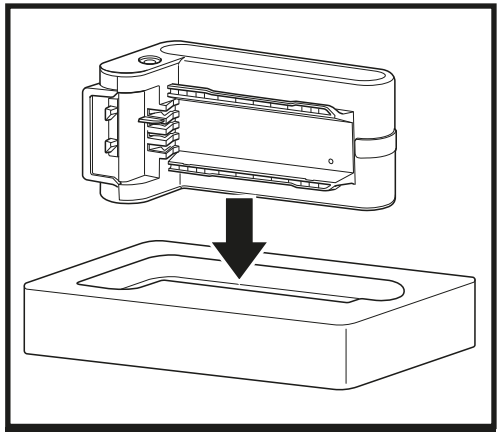

CHARGING SLEEVE

To charge the battery, remove it from the vacuum and insert into the charging sleeve. Once the battery is showing as fully charged reinsert into the handle compartment on the vacuum (see charging indicators on previous page)

USING YOUR VACUUM

CONTROLS AND CLEANING MODES

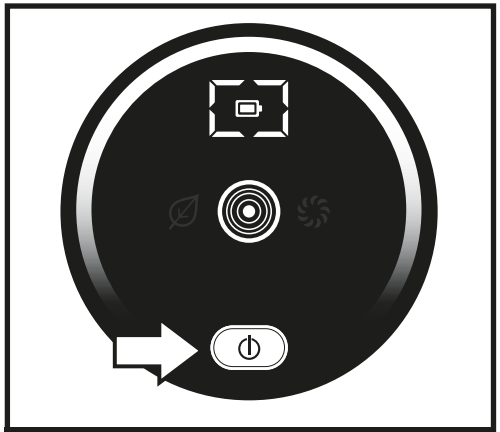

POWER

Press the ⏻ button on the UI Screen to turn on power. To turn off power, press the button again.

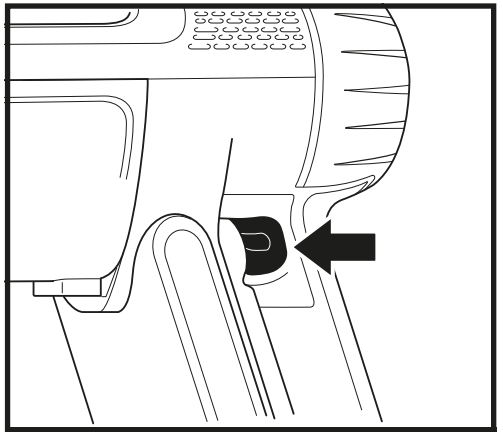

MODE SELECT

To toggle between ECO, DETECT, and BOOST modes, press the mode selection trigger on the handle (shown above).
In DETECT mode, Detect Technology automatically adjusts vacuum and nozzle power to maximise cleaning performance and optimise runtime.

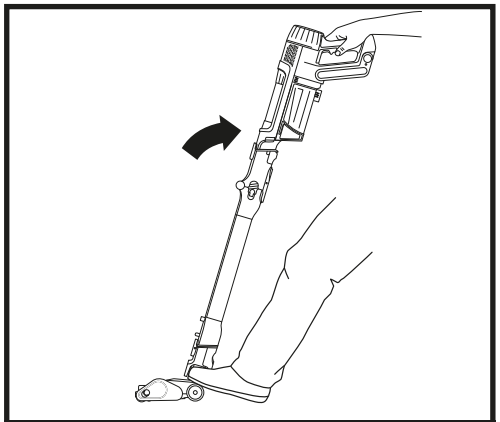

UPRIGHT LOCK

To begin cleaning with the floor nozzle, disengage the lock by stepping on the nozzle and tilting the hand vac down.

NOTE: For - Best Cleaning on ASTM and IEC Cleaning Tests, Use **Boost** Mode.

DETECT TECHNOLOGY EXPLAINED

NOTE: Detect Technology is ONLY operational in Detect Mode and is activated automatically when the unit is in use.

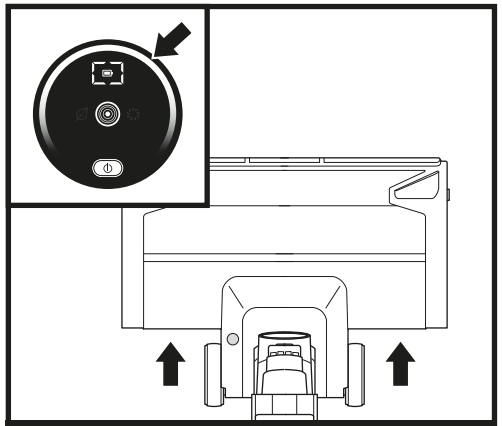

CLEAN INDICATOR

Vacuum identifies dirtier areas and automatically boosts suction power to pull in hidden dirt.

White LED = No heavy debris detected, low suction

Pink LED = Debris is being cleaned, medium suction

Purple LED = Heavy debris detected, high suction

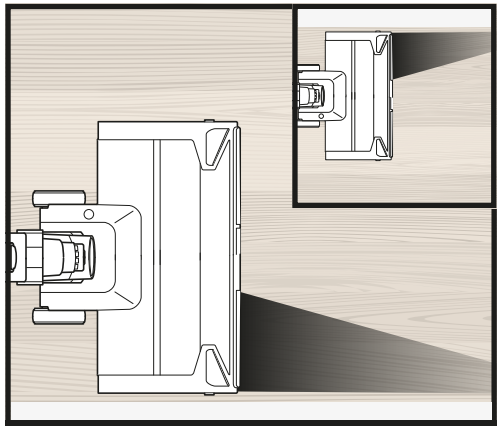

EDGE INDICATOR

Vacuum floor nozzle detects edges and corners and maximises suction and power to remove stubborn dirt.

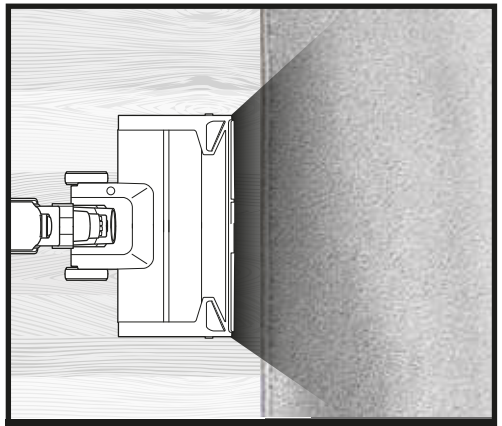

FLOOR DETECT

Brushroll and vacuum responds to surface changes and automatically adjusts to optimise your clean.

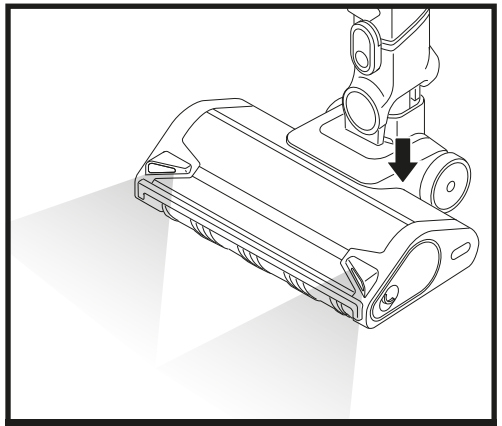

LIGHT DETECT

Senses low-light situations and automatically illuminates dark areas to help you spot debris.

FLEXOLOGY

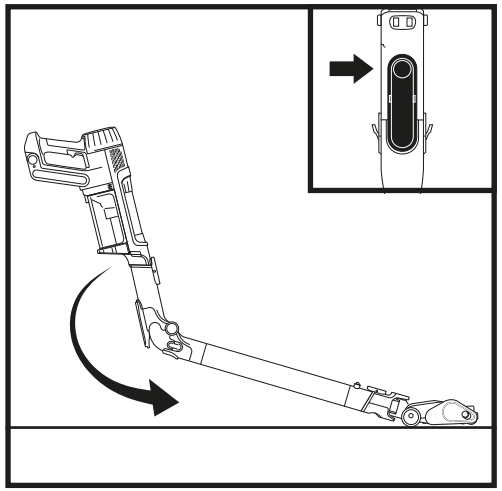

Flexology allows you to flex the wand to reach under furniture and clean debris in hard-to-reach areas.

To engage the Flexology feature, press the unlock button on the back of your Flex Wand.

For straight wand cleaning, return the wand to its original angle. You will hear a click when it is securely back in place.

STORAGE

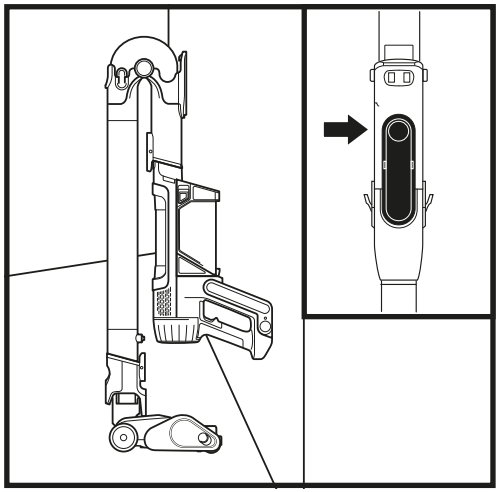

To put the vacuum into storage mode, press the Flexology wand unlock button while folding the handheld vacuum forward until it is resting against the wand.

To release vacuum from storage mode, unfold the vacuum until the wand straightens and clicks securely back in place.

ABOVE-FLOOR CLEANING

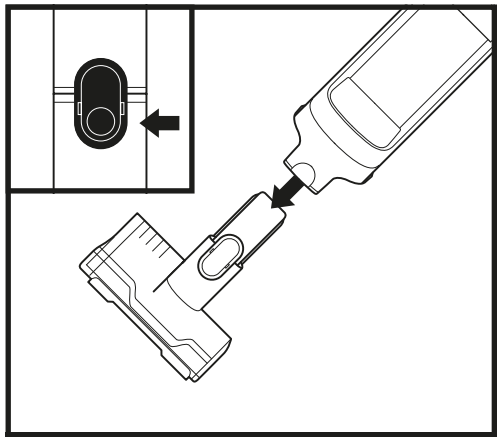

ABOVE-FLOOR WITH HAND VACUUM

Detach the hand vacuum to clean above-floor areas. Press the front latch release button on the hand vac where it meets the wand, then lift off the hand vacuum. To attach an accessory to the hand vacuum, slide it into the opening in the nozzle. To remove, press the front latch release button on the hand vac where it meets the wand, and slide out the accessory.

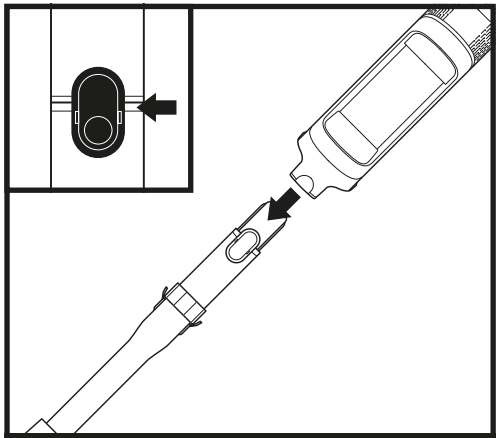

ABOVE-FLOOR WITH WAND

To detach the floor nozzle from the wand, step on the nozzle while pressing the nozzle release button at the bottom of the wand. Lift the wand to remove it. To reattach the wand, align it over the neck of the floor nozzle, then slide it on until it clicks into place.

EMPTYING THE HANDHELD VACUUM DUST CUP (IP1000 SERIES)

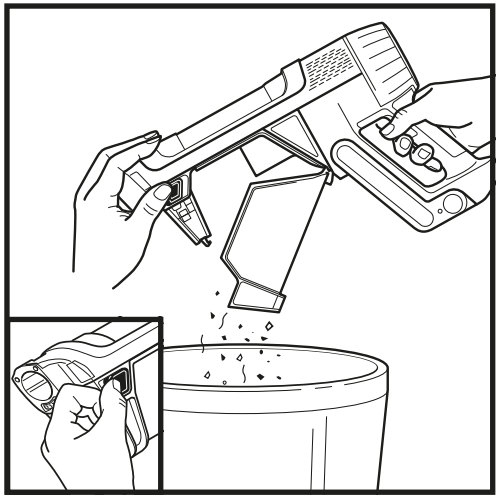

To empty the handheld vacuum dust cup, turn off the power and hold the vacuum directly over the rubbish bin. Press the release button and the dust cup lid will drop open, releasing debris.

CLEANING THE VACUUM DUST CUP

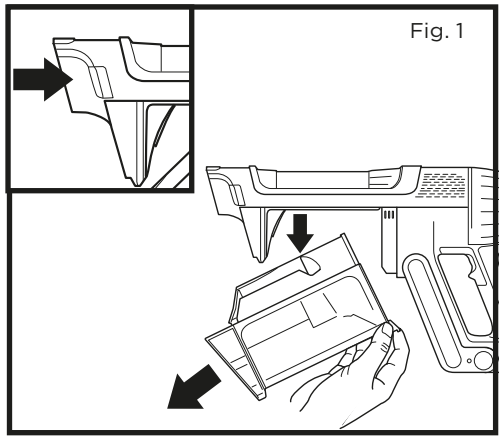

1. To access the dust cup on your IP1000 hand vacuum, engage the dust cup removal button and pull downward disengage from the hand vacuum (Fig. 1).

CLEANING THE VACUUM ANTI-ALLERGEN FILTER

NOTE: For best results, clean your filters at least once a month and replace the filters regularly. To clean filters, clear loose debris and rinse with cold water ONLY to prevent damage from cleaning chemicals. Allow all filters to dry fully before reinstalling to prevent liquid from being drawn into electrical parts. Maintaining your Filters will ensure successful cleaning and Auto-Empty evacuation (IP3000 series only).

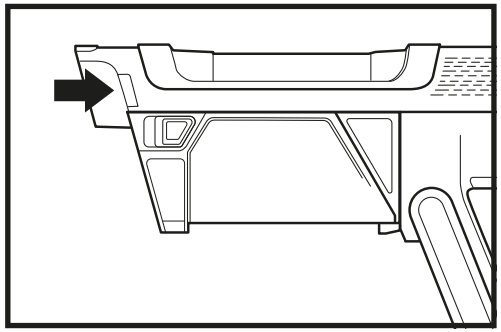

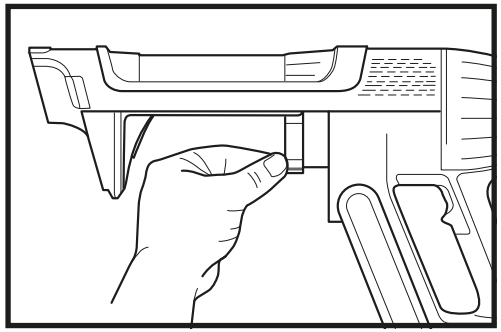

1. To access filter, press the dust cup release button and remove the dust cup.
2. Pull the release tab to remove the filter for the vacuum.
3. After cleaning, slide the filter back into the vacuum.

NOZZLE MAINTENANCE

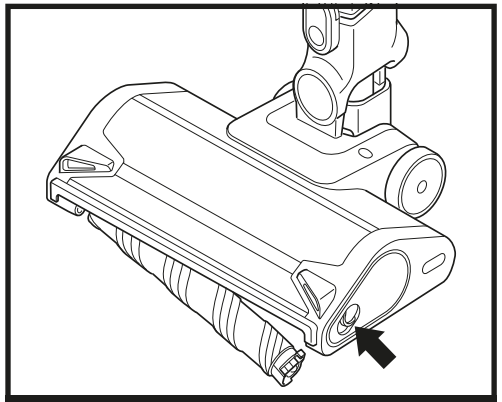

REMOVING SOFT ROLLER

1. Turn off the vacuum.
2. Press the nozzle release button to detach the nozzle from the wand.
3. Press the soft roller release button and slide the soft roller out of the nozzle.
4. Clear any blockages and remove any debris from the soft roller and floor nozzle.
5. Tap off loose debris and wipe the soft roller clean with a dry towel. Hand wash the soft rollerif needed, using only water, and then let it air dry completely before reinstalling.
6. When the soft roller is completely dry, reinstall it into the nozzle by inserting it into the nozzle until it clicks.

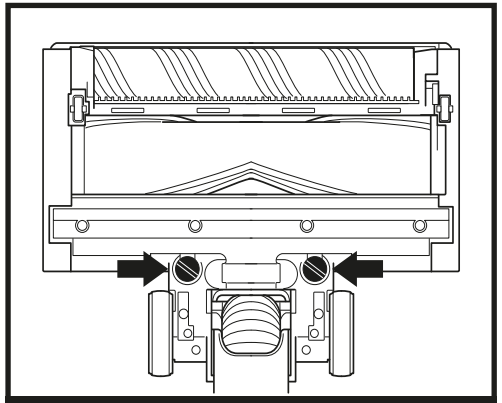

REMOVING SQUEEGUEE

1. Turn off the vacuum.
2. Press the nozzle release button to detach the nozzle from the wand.
3. Remove rear squeegee by turning screws.
4. Clear our any blockages and debris from behind the squeegee.
5. Reinstall squeegee and turn screws until they lock into place.

CLEANING THE SENSORS

Make sure to clean the Detect sensors regularly, as hair and other debris may build up and obstruct them. If the sensors are partially obstructed, Clean Sense Detect mode will not function as expected.

To clean the sensors:

1. Turn off power and remove the floor nozzle.
2. Locate the Dirt Detect Sensor in the nozzle of the hand vac (Fig. 1), the Light Detect Sensor on the top of the nozzle (Fig. 2), the Edge Detect sensor on the side of the nozzle (Fig. 3), and the Floor Detect Sensor (Fig 4) on the bottom of the nozzle.
3. Gently wipe the sensors with a microfibre cloth and remove all hair and debris.
4. Reattach the floor nozzle to the rest of the unit and turn on power. Verify that the unit is functioning normally.

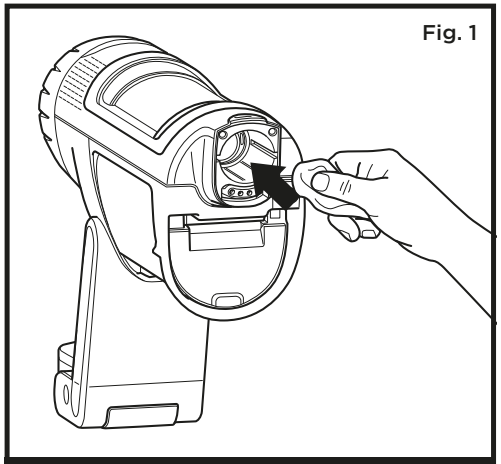

DIRTDETECT SENSORS

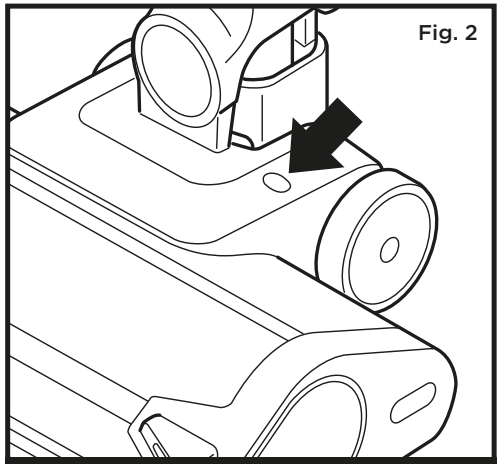

LIGHTDETECT SENSOR

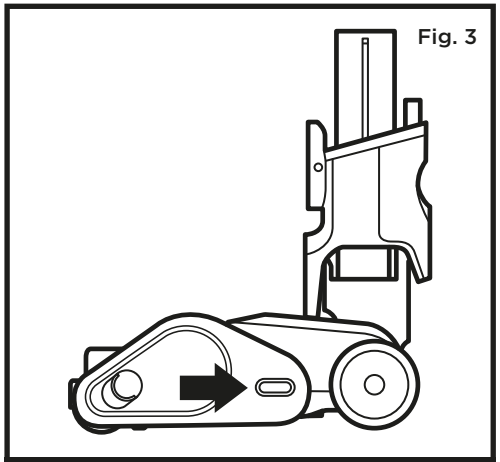

EDGEDETECT SENSOR

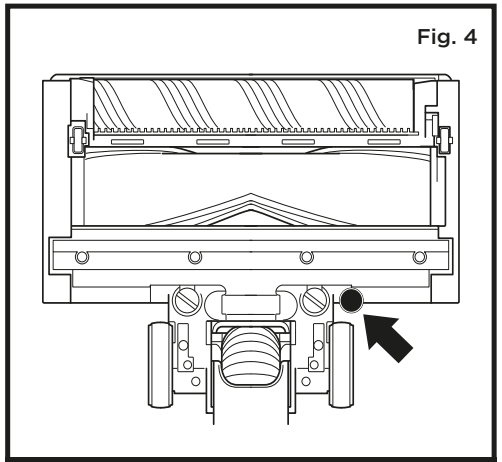

FLOORDETECT SENSOR

CHECKING FOR BLOCKAGES IN THE VACUUM

If you run over a hard or sharp object or notice a noise change while vacuuming, check for blockages or objects caught in the brushroll.

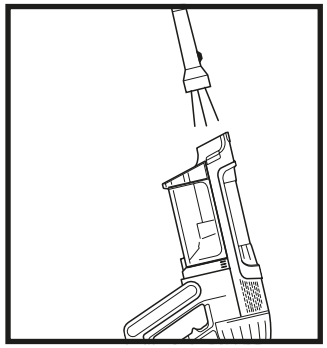

Checking for Blockages in the Hand Vacuum:

1. Turn off the vacuum.

2. Remove the hand vacuum from the wand.

3. Check all intake openings to the dust cup and remove any debris or blockages.

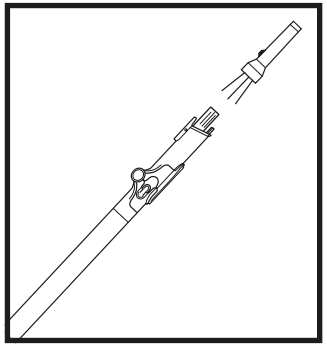

Checking for Blockages in the Wand:

1. Turn off the vacuum.

2. Detach the hand vacuum and floor nozzle from the wand.

3. Check both ends of the wand for blockages and debris.

4. Clear away any debris or blockages.

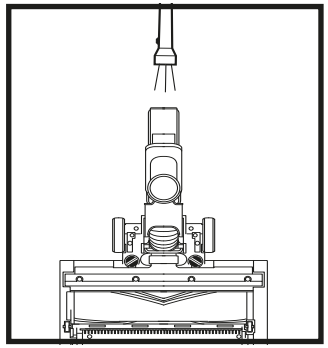

Checking for Blockages in the Floor Nozzle:

1. Turn off the vacuum.

2. Detach the wand from the floor nozzle.

3. Press the soft roller release button and slide the brushroll out of the nozzle.

4. Clear any blockages and release any debris from the brushroll and floor nozzle.

5. Slide the soft roller back into the nozzle, ensuring everything is lined up and in place.

TROUBLESHOOTING

WARNING: To reduce the risk of shock and unintended operation, turn off power and remove the battery before servicing.

Vacuum is not picking up debris. No suction or light suction. Third indicator light on hand vacuum is solid yellow.
(Refer to Checking for Blockages section for more information.)

1. Dust cup may be full; empty dust cup.
2. Check floor nozzle for blockages; clear blockages if required.
3. Remove any string, carpet fibers, or hair that may be wrapped around the brushroll.
4. Check connection between hand vacuum and wand for blockages; clear blockages if required.
5. Check filters to see if they need cleaning. Follow instructions for rinsing and completely air-drying the filters before reinstalling them.

Vacuum lifts area rugs.

1. Make sure you are not engaging Boost mode. Take care when vacuuming area rugs or rugs with delicately sewn edges.
2. Turn off the unit to disengage from the carpet, then restart.

The brushroll in the floor nozzle doesn't spin.

1. Immediately turn off the vacuum. Remove any blockages before turning the vacuum back on. Make sure the hand vacuum is tilted back far enough for the brushroll to engage while in use.
2. If the floor nozzle has headlights and they are not illuminated, there is a connection issue between the hand vacuum, wand, and nozzle. Try detaching the parts, then reconnecting them.

Vacuum turns off on its own.

There are several possible reasons for the vacuum turning off on its own, including blockages, battery issues, and overheating. If vacuum turns off on its own, perform the following steps:

1. Turn on the vacuum and check the battery indicator lights on the hand vacuum. If recharging is needed, make sure vacuum power is off placing it on the charging dock.
2. Empty dust cup and clean filters (See the Cleaning the Dust Cup and Filter section).
3. Check wand, accessories, and inlet openings and remove any blockages.
4. Allow unit and battery to cool for at least 45 minutes, until they return to room temperature.
5. Press the On/Off switch to restart the vacuum.

Malfunction	Component	Error Icons phase 1		Error Icons phase 2	LED Icons
Nozzle Clog or Stalling	Nozzle	LED Ring is Flashing Purple	⇔	No LEDs	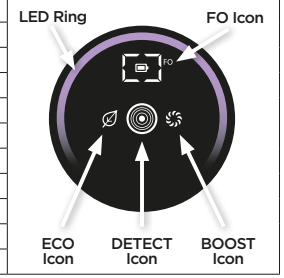
Motor Failure during start up	Hand Vacuum	Eco, Boost LEDs on	⇔	Eco, Detect LEDs on	
Over Temperature Protection	Hand Vacuum	Eco, Detect, Boost LEDs on	⇔	Boost, Detect LEDs on	
Over Current protection	Hand Vacuum	Eco, Detect, Boost LEDs on	⇔	No LEDs	
Short Protection	Hand Vacuum	Eco, Detect LEDs on	⇔	No LEDs	
Overspeed Protection	Hand Vacuum	Detect LEDs on	⇔	Eco, Boost LEDs on	
Communication failure	Hand Vacuum	Eco, Detect LEDs on	⇔	Detect, Boost LEDs on	
Over Temperature Protection	Nozzle	Eco, Boost LEDs	⇔	No LEDs	
Short Protection	Nozzle	Detect, Boost LEDs on	⇔	No LEDs	
Debris Detection Failure	Hand Vacuum	F0 LEDs & LED Ring on	⇔	No LEDs	
Edge Detect Error	Nozzle	F0 LED on, LED Ring on & Headlight LEDs	⇔	No LEDs	

NOTE: If vacuum still does not operate properly, contact Customer Service on **+44 (0)800 862 0453**

ADDITIONAL ACCESSORIES AVAILABLE

- **A Crevice Tool**
- **B Duster Crevice Tool**
- **C Flexible Crevice Tool**
- **D Anti-Allergen Brush**
- **E Multi-Surface Tool**
- **F Motorised Hand Tool**
- **G Wide Upholstery Tool**
- **H Car Detail Kit**
- **I Replacement Battery**
- **J Hand Vacuum Pre-Motor Filter**
- **K Hand Vacuum Post-Motor Anti-Allergen Filter**
- **L Battery Charging Sleeve**

A

B

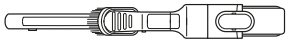

C

D

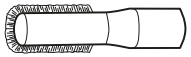

E

F

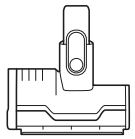

G

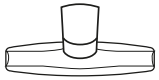

H

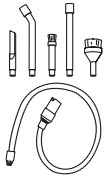

I

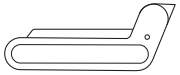

J

K

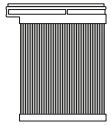

L

NOTE: Not all accessories come with all units. Please see the Quick Start Guide on the packaging box for your unit's configuration. To order additional accessories, visit **sharkclean.co.uk**.

Shark | NINJA

MANUFACTURER'S GUARANTEE

The Shark Guarantee

When a consumer buys a product in the UK, they get the benefit of legal rights relating to the quality of the product (your "legal rights"). You can enforce your legal rights against your retailer, including Shark if you bought your appliance from sharkclean.co.uk . However, at Shark we are so confident about the quality of our products that we give the owner an additional, free parts and labour manufacturer's guarantee of up to 5 years (2 years for batteries).

The guarantee it comes with is an important consideration - and reflects how much confidence the manufacturer has in its product and manufacturing quality.

The manufacturer's guarantee does not affect your legal rights.

How long are new Shark machines guaranteed for?

Our manufacturer's guarantee lasts for one year from the date of purchase as standard, or for five years (two years for batteries) if you register your purchase with us within 28 days.

How do I register my Shark guarantee?

If you have purchased your Shark appliance directly from sharkclean.co.uk your guarantee is registered automatically. If you bought it from anywhere else in the UK, you can register your guarantee online within 28 days of purchase.

- To register online, please visit sharkclean.co.uk/register-guarantee or scan the QR code in your instruction booklet.
- Keep a note of the date you purchased the machine.

IMPORTANT:

- Keep your receipt if you bought your Shark appliance from anywhere except sharkclean.co.uk. You will need it to claim under your guarantee.
- The free Shark guarantee only applies in the UK.

What are the benefits of registering my free Shark guarantee?

When you register your guarantee, you will get an extra four years of cover (extra one year for batteries). We'll also have your details to hand if we ever need to get in touch. If you further agree to receive communications from us, you can also receive tips and advice on how to get the best out of your Shark appliance and hear the latest news about new Shark technology and launches.

What is covered by the free Shark guarantee?

Repair or replacement (at Shark's discretion) of your Shark machine, including all parts and labour.

What is not covered by the free Shark guarantee?

- Normal wear and tear.
- Accidental damage or faults caused by negligent use or care, misuse, neglect, careless operation or handling of the Shark appliance which is not in accordance with the Shark Operating Manual supplied with your machine.
- Damage caused by use of the Shark appliance for anything other than normal domestic household purposes.
- Damage caused by use of parts not assembled or installed in accordance with the operating instructions.
- Damage caused by use of parts and accessories which are not Shark Genuine Components
- Faulty installation (except where installed by Shark).
- Repairs or alterations carried out by parties other than Shark or its agents.

How can I claim under the free Shark guarantee?

Contact our customer service helpline on 0800 862 0453. For service hours please visit our website under 'Contact Us'. It's free to call, and you'll be put straight through to a Shark representative. You'll also find online support at support.sharkclean.co.uk . The Shark representative will go through some troubleshooting with you, and if we conclude that the item has failed, we will send you a replacement part or a returns label to send the defective item back to us free of charge. When you have delivered the defective product to us, we will send you a replacement.

Please remember that the item will need to be boxed when you return it to us. It can be any suitable box, it does not have to be the original packaging.

Where can I buy genuine Shark spares and accessories?

Shark spares and accessories are developed by the same engineers who developed your Shark appliance. You'll find a full range of Shark spares, replacement parts and accessories for all Shark machines at sharkclean.co.uk . Please remember that damage caused by the use of non-Shark spares may not be covered under your guarantee.

SharkNinja Europe Ltd,
1st/2nd Floor Building 3150,
Thorpe Park, Century Way,
Leeds, England, LS15 8ZB UK
+44 (0)800 862 0453
www.sharkclean.co.uk

SharkNinja Germany GmbH,
Rotfeder-Ring 9,
60327 Frankfurt am Main,
Germany

Illustrations may differ from actual product. We are constantly striving to improve our products; therefore the specifications contained herein are subject to change without notice.

©2024 SharkNinja Operating LLC. All rights reserved. Made in China. Due to continuing design and quality improvements, the unit inside may differ slightly from what is depicted on this box. SHARK and FLOORDETECT are registered trademarks in the United Kingdom of SharkNinja Operating LLC. DETECT PRO is a pending trademark application in the United Kingdom of SharkNinja Operating LLC. EDGEDETECT is an unregistered trademarks in the United Kingdom of SharkNinja Operating LLC.

IP1000v1_Series_IB_MP_240729_Mv1
PRINTED IN CHINA

@sharkcleaninguk

@sharkcleanuk

@sharkcleanuk