Shark®

Cordless Clean & Empty Stick Vacuum & Auto-Empty System

BU3000 Series
BU3500 Series

OWNER'S GUIDE

IMPORTANT SAFETY INSTRUCTIONS

FOR HOUSEHOLD USE ONLY

⚠ WARNING

When using an electrical appliance, to reduce the risk of fire, electric shock, injury, or property damage, basic precautions should always be followed, including the following:

READ ALL INSTRUCTIONS BEFORE USING THIS VACUUM:

1. This vacuum consists of a motorized nozzle, wand, and handheld vacuum. These components contain electrical connections, electrical wiring, and moving parts that potentially present risk to the user. The floor nozzle, wand, and handheld vacuum contain electrical connections.
2. Before each use, carefully inspect all parts for any damage. If a part is damaged, discontinue use.
3. Use only identical replacement parts.
4. This vacuum contains no serviceable parts.
5. Use only as described in this manual. **DO NOT** use the vacuum for any purpose other than those described in this manual.
6. With the exception of the filters and dust cup, **DO NOT** expose any parts of the vacuum to water or other liquids.
7. Keep the appliance and its cord out of reach of children. **DO NOT** allow the appliance to be used by children. **DO NOT** allow to be used as a toy. Close supervision is necessary when used near children.

GENERAL USE

8. This appliance can be used by persons with reduced physical, sensory, or mental capabilities or lack of experience and knowledge if they have been given supervision or instruction concerning use of the appliance in a safe way and understand the hazards involved. Cleaning and user maintenance shall not be made by children.
9. Always turn off the vacuum before connecting or disconnecting any current carrying hoses, motorized nozzles, chargers, batteries, or other electrical or mechanical parts.
10. **DO NOT** handle plug or vacuum with wet hands.
11. **DO NOT** use without dust cup, HEPA and Pre-motor filter, and soft roller in place.
12. Only use Shark® branded filters and accessories. Failure to do so will void the warranty.
13. **DO NOT** put any objects into nozzle or accessory openings. **DO NOT** use with any opening blocked; keep free of dust, lint, hair, and anything that may reduce airflow.
14. **DO NOT** use if nozzle or accessory airflow is restricted. If the air paths or the motorized floor nozzle become blocked, turn the vacuum off. Remove all obstructions before you turn on the unit again.
15. Keep nozzle and all vacuum openings away from hair, face, fingers, uncovered feet, or loose clothing.
16. **DO NOT** use if vacuum is not working as it should, or has been dropped, damaged, left outdoors, or dropped into water.
17. Use extra care when cleaning on stairs.
18. **DO NOT** leave the vacuum unattended while powered on.
19. When powered on, keep the vacuum moving over the carpet surface at all times to avoid damaging the carpet fibers.
20. **DO NOT** place vacuum on unstable surfaces such as chairs or tables.
21. **DO NOT** use to pick up:
    a) Liquids
    b) Large objects
    c) Hard or sharp objects (glass, nails, screws, or coins)
    d) Large quantities of dust (including drywall, fireplace ash, or embers). **DO NOT** use as an attachment to power tools for dust collection.
    e) Smoking or burning objects (hot coals, cigarette butts, or matches)
    f) Flammable or combustible materials (lighter fluid, gasoline, or kerosene)
    g) Toxic materials (chlorine bleach, ammonia, or drain cleaner)
22. **DO NOT** use in the following areas:
    a) Poorly lit areas
    b) Wet or damp surfaces
    c) Outdoor areas
    d) Spaces that are enclosed and may contain explosive or toxic fumes or vapors (lighter fluid, gasoline, kerosene, paint, paint thinners, mothproofing substances, or flammable dust)
23. Turn off the vacuum before plugging in or unplugging the charger.
24. Turn off the vacuum before any adjustment, cleaning, maintenance, or troubleshooting.
25. During cleaning or routine maintenance, **DO NOT** cut anything other than hair, fibers, or string wrapped around the brushrolls.
26. Allow all filters to air-dry completely before replacing in the vacuum to prevent liquid from being drawn into electric parts.
27. **DO NOT** modify or attempt to repair the vacuum or the battery yourself, except as indicated in this manual. **DO NOT** use the battery or vacuum if it has been modified or damaged. Damaged or modified batteries may exhibit unpredictable behavior resulting in fire, explosion, or risk of injury.
28. Always turn off this appliance before connecting or disconnecting motorized nozzle or hand tool.

BATTERY PACK

29. The battery is the power source for the vacuum. Carefully read and follow all charging instructions.
30. To prevent unintentional starting, ensure the vacuum is powered off before picking up or carrying the vacuum. **DO NOT** carry the appliance with your finger on the power switch.
31. For BU3120 and BU3500 series please use battery pack XBTR625KSLN.
32. For charging, please use charger dock XDCKBU3500S or chargers DK25A-263080H-U or YLS0251A-T263080.
33. Keep the battery away from all metal objects such as paper clips, coins, keys, nails, or screws. Shorting the battery terminals increases the risk of fire or burns.
34. Under abusive conditions, liquid may be ejected from the battery. Avoid contact with this liquid, as it may cause irritation or burns. If contact occurs, flush with water. If liquid contacts eyes, seek medical help.
35. Battery should not be stored at temperatures below 3°C (37.4°F) or above 104°F (40°C) to maintain long-term battery life.
36. **DO NOT** charge battery at temperatures below 5°C (40°F) or above 104°C (104°F). Charging improperly or at temperatures outside of the specified range may damage the battery and increase the risk of fire.
37. Store the appliance indoors. **DO NOT** use or store it below 3°C (37.4°F). Ensure the appliance is at room temperature before operating.
38. **DO NOT** expose the battery to fire or temperatures above 265°F (130°C) as it may cause explosion.
39. Use appliances only with specifically designated battery packs. Use of any other battery packs may create a risk of injury and fire.
40. Disconnect the battery pack from the appliance before making any adjustments, changing accessories, or storing appliance. Such preventive safety measures reduce the risk of starting the appliance accidentally.
41. **CAUTION:** Because of generational update to BU3120 please read the following notes: Remove the battery pack and check the rating voltage and battery pack model number. If the rating voltage is 18V or the battery pack model is XBATR525SL or XBATR525SLN, please use XBATR525SL or XBATR525SLN and use charging dock: XDCKBU3000S or charger: DK18-220080H-UU or YLS0251A-T220080.
42. If the charging cord plug does not fit fully into the outlet, reverse the plug. If it still does not fit, contact a qualified electrician. **DO NOT** force into outlet or try to modify to fit.
43. To reduce the risk of shock and unintended operation, turn off power and remove the Li-Ion battery before servicing.
44. Unplug the power cord from outlet when not in use and before servicing.
45. Do not unplug by pulling on cord. To unplug, grasp the plug, not the cord.
46. Turn off all controls before unplugging.
47. Do not pull or carry by cord, use cord as a handle, close a door on cord, or pull cord around sharp edges or corners. Do not run appliance over cord. Keep cord away from heated surfaces
48. The product's power supply cord should be directly plugged into an electrical outlet. Extension cord should not be used.
49. The length of the power supply cord provided on the product is 1.2 meters.

SAVE THESE INSTRUCTIONS

sharkclean.com

AUTO-EMPTY ASSEMBLY

1. Slide the **Wand** onto the neck of the **Floor Nozzle** until it clicks into place.
2. Align the **Hand Vacuum** nozzle opening with the top of the wand and slide it on until it clicks into place.
3. Make sure the **Dock** is facing upright. Slide the **Charging Post** into the slot on front of dock until it clicks.
4. Place the dock on the floor near a wall outlet. Plug the **Power Cord** into the outlet.
5. Store the crevice tool accessory on the mount on the dock.

For proper operation, ensure all components are completely connected and clicked into place.

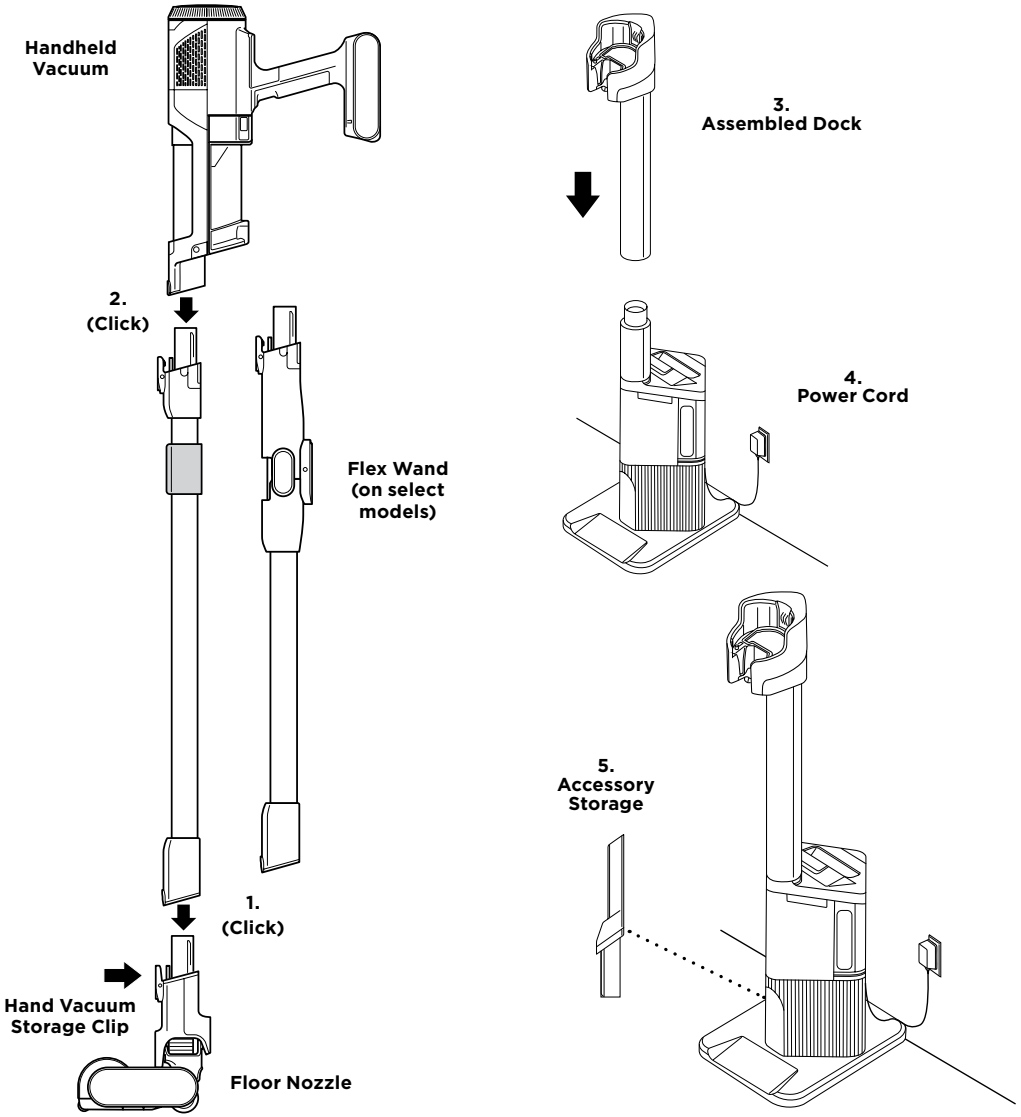

NOTE: Once the charging post is installed, it can't be removed.

LI-ION BATTERY

Prior to first use, charge the battery completely. A full charge takes approximately 4.5 hours.

RUNTIMES PER FULLY CHARGED BATTERY

BU3120 series, with a full charge, will have up to 40 minutes of runtime. BU3521 series, with a full charge, will have up to 40 minutes of runtime. Visit **sharkclean.com/support** online for more information.

LED BATTERY POWER AND CHARGING INDICATORS

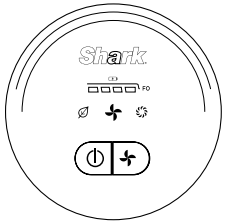

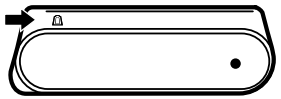

Charging

LED on the battery pack will pulse yellow when reaching 0-75% charge.

LED on the battery pack will pulse green from 75% - 100% charge.

LED on the battery pack will turn white when battery is fully charged.

NOTE: *Full charge takes approximately 4.5 hours.*

Additional Notes

1. When the battery is fully charged, the LED will turn white, then shut off.
2. Unit will not power on when charger is connected.

In Use

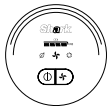

Full Charge

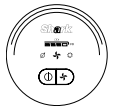

Mid Charge

Low Charge

Nearly Empty

No Charge

RECYCLING THE LI-ION BATTERY

When the Shark® Li-ion battery needs to be replaced, dispose of it or recycle it in accordance with local ordinances or regulations. In some areas, it is illegal to place spent lithium-ion batteries in the trash or in a municipal solid waste stream. Return spent batteries to an authorized recycling center or to the retailer for recycling. Contact your local recycling center for information on where to drop off the spent battery.

NOTE: The Shark battery, like all lithium-ion batteries, will naturally decrease in capacity over time from the 100% capacity of a new battery.

CHARGING

CHARGING WHILE IN STORAGE MODE

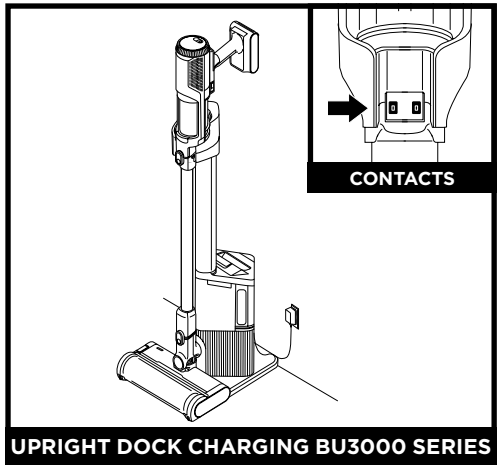

UPRIGHT DOCK CHARGING BU3000 SERIES

Charge the unit by placing it on the dock. Make sure the contacts on the wand are aligned with the contacts on the charging post. When charging is complete and you need to use the unit again, lift it off the dock.

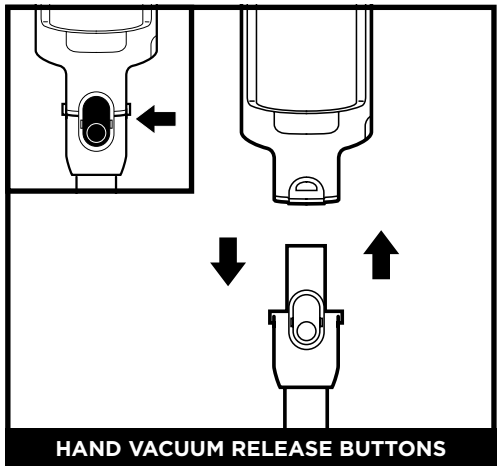

HAND VACUUM RELEASE BUTTONS

To detach the hand vacuum from the wand, press the front latch release button on the hand vac where it meets the wand, then lift off the hand vacuum. To reattach the hand vacuum to the wand, align the hand vacuum opening over the top of the wand and slide it on until it clicks into place.

NOTE: When the unit is docked properly, the charging lights on the battery will blink, indicating that charging has begun.

NOTE: The main unit comes with a partial charge. For maximum runtime, charge fully before first use (approximately 4.5 hours). Leaving the unit plugged in will not damage battery life.

BATTERY REMOVAL

REMOVING THE BATTERY

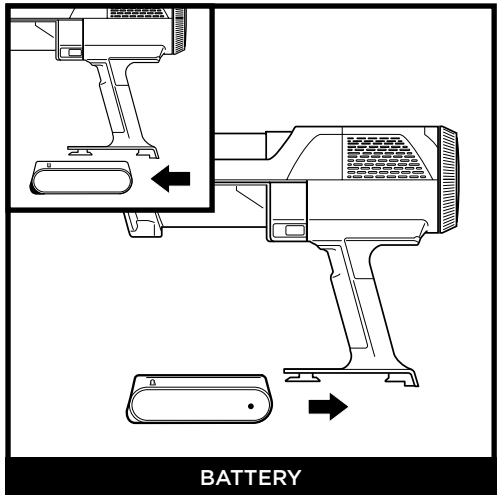

BATTERY

To remove the battery from the hand vacuum, press the release tab on the battery cap and slide out the battery. To reinstall, slide the battery into the compartment in the handle until it clicks into place.

STORAGE ON THE GO

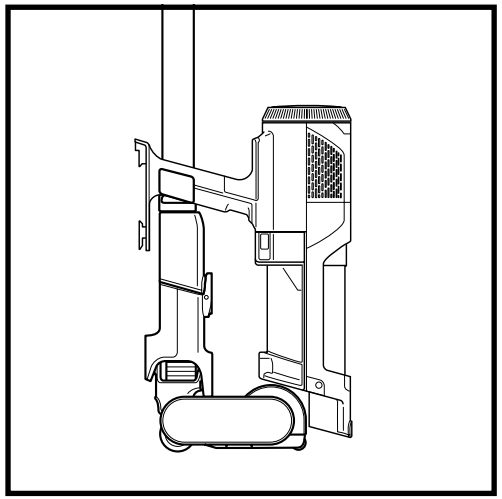

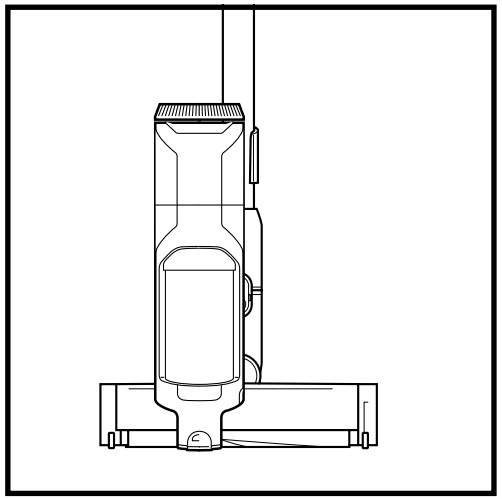

For quick and easy short-term storage, attach the hand vacuum to the wand by placing it onto the pre-assembled wand storage clip.

USING YOUR VACUUM

CONTROLS AND CLEANING MODES

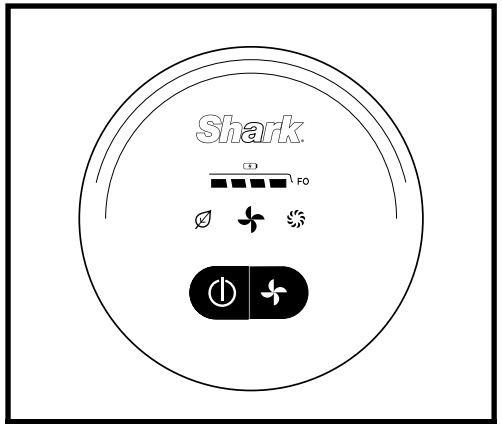

POWER

Press the ⏻ button on the control panel on the back of the handheld vacuum to turn on power. To turn off power, press the button again. To toggle between ECO, AUTO, and BOOST modes, press the mode selection button.

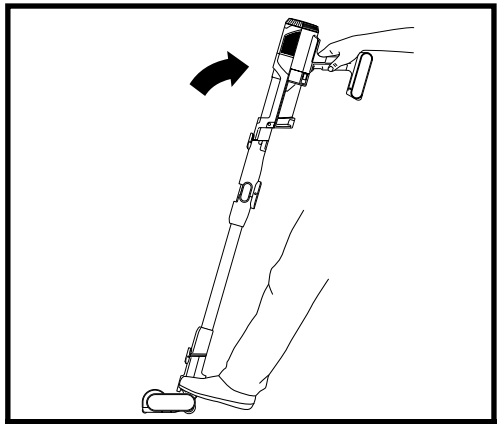

UPRIGHT

When the vacuum is in the upright position, the nozzle will lock to allow for freestanding storage. To disengage the lock to start cleaning, step on the nozzle.

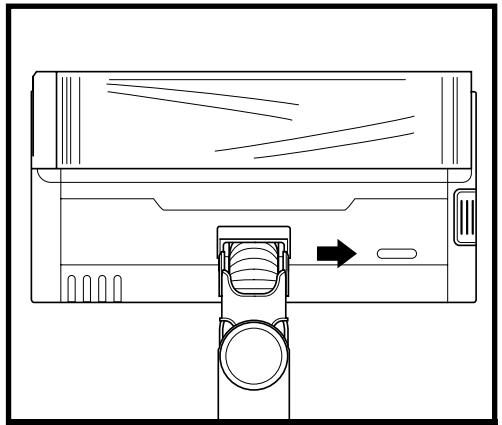

AUTO MODE

Automatically adjusts to different floor types, with brushroll speed optimized for deep carpet cleaning. When on bare floor, the indicator light on the nozzle will be BLUE. On carpet, the light will be MAGENTA. The light will turn RED if there is an error or clog. See Troubleshooting if this occurs.

MODES EXPLAINED

AUTO mode:
Automatically adjusts to different floor types, with brushroll speed optimized for deep carpet cleaning. When on bare floor, the indicator light on the nozzle will be BLUE. On carpet, the light will be MAGENTA.

ECO mode:
Vacuum runs on the lowest power setting to preserve battery life. AUTO mode is **NOT** activated in this mode. The light on the nozzle will be BLUE when in ECO mode.

BOOST mode:
Vacuum runs at maximum power for the highest possible suction level. AUTO mode is **NOT** activated in this mode. The light on the nozzle will be MAGENTA when in BOOST mode.

ABOVE-FLOOR CLEANING

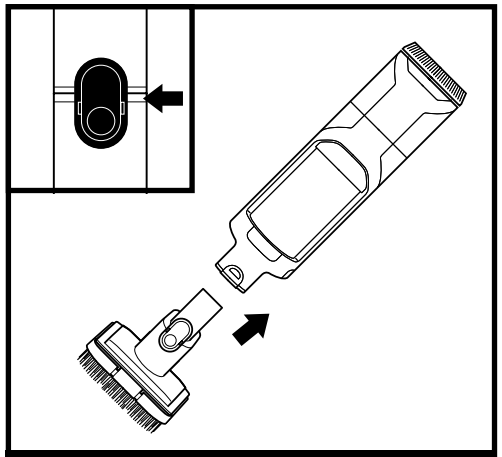

ABOVE-FLOOR WITH HAND VACUUM

Detach the hand vacuum to clean above-floor areas. Press the front latch release button on the hand vac where it meets the wand, then lift off the hand vacuum. To attach an accessory to the hand vacuum, slide it into the opening in the nozzle. To remove, press the release button and slide out the accessory.

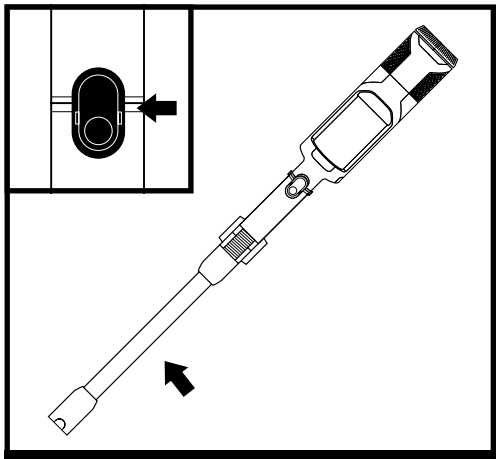

ABOVE-FLOOR WITH WAND

To detach the floor nozzle from the wand, step on the nozzle while pressing the nozzle release button at the bottom of the wand. Lift the wand to remove it. To reattach the wand, align it over the neck of the floor nozzle, then slide it on until it clicks into place.

NOTE: All accessories are compatible with both the wand and the hand vacuum.

EMPTYING THE DOCK DUST BIN

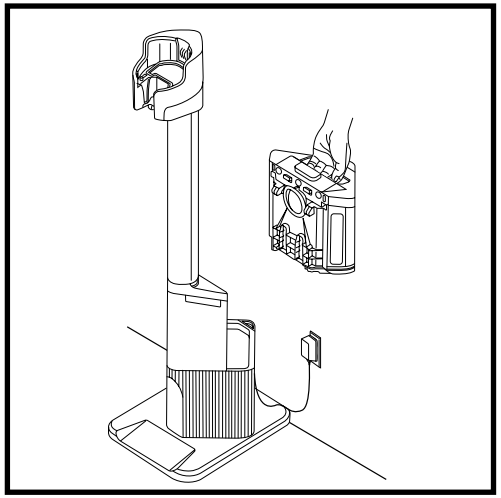

The dock dust bin holds up to 30 days' worth of dust and debris. To remove the bin, press the dust bin release button and lift the bin out by the handle.

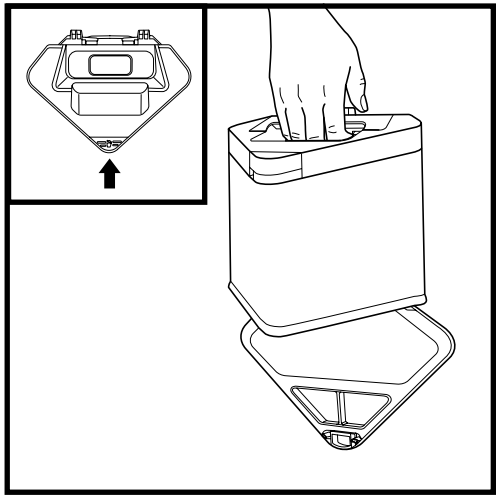

To empty the bin, hold it over the trash and press the release button on the top of the dust bin. The bottom will open to release the debris.

EMPTYING THE HANDHELD VACUUM DUST CUP

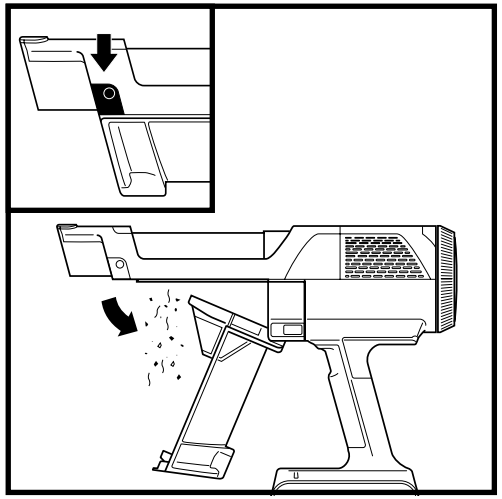

To empty the handheld vacuum dust cup, turn off the power and hold the hand vac over the trash. Press the release button and the dust cup lid will drop open, releasing debris.

USING THE AUTO-EMPTY DOCK

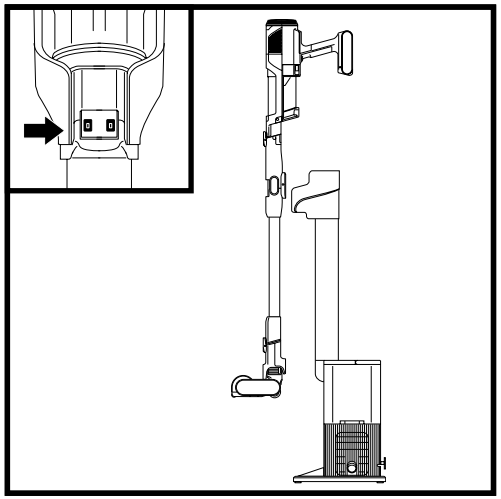

Place the vacuum on the dock with the wand in the cradle of the charging post. When the vacuum is properly docked, automatic evacuation will begin. The evacuation cycle will last for 15 seconds.

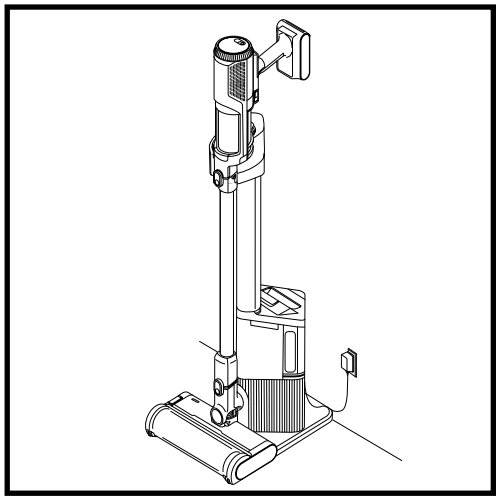

Once evacuation is complete, the vacuum will continue charging until it is removed from the dock.

Note: DO NOT remove the vacuum while the evacuation cycle is taking place.

CLEANING THE HANDHELD VACUUM DUST CUP AND FILTER

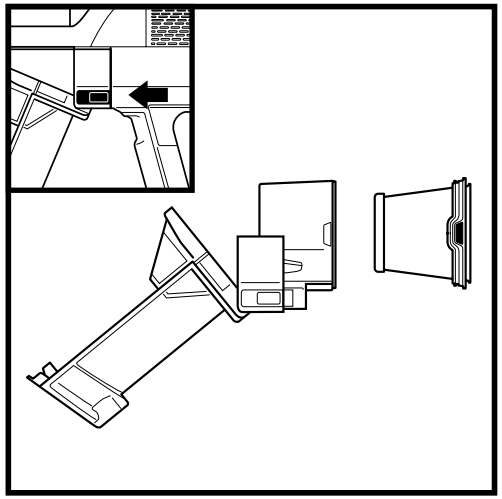

With the dust cup open and the power off, press both release buttons and slide the dust cup out of the hand vac.

Press the tabs on both sides of the filter housing and pull the filter out of the housing. To clean the filter, rinse it with water only and allow it to air-dry for at least 24 hours before reinstalling. To reinstall the filter, slide it back into the housing, then slide the housing back into place.

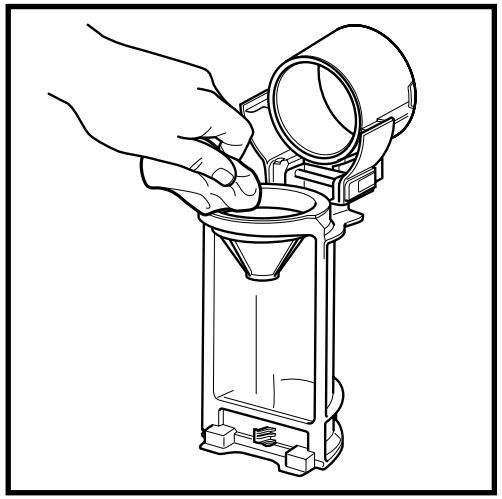

To deep-clean the dust cup, slide the release button until the lid opens completely. Wipe away any dust and debris with a dry cloth, then rinse it out with water. Use a damp cloth to remove any remaining debris. Allow the dust cup to air-dry completely for at least 24 hours before reinstalling it.

IMPORTANT: DO NOT use soap when cleaning the filters. Use water only. Ensure that all filters are installed before using.

MAINTAINING YOUR VACUUM

CLEANING THE AUTO-EMPTY DOCK FILTER

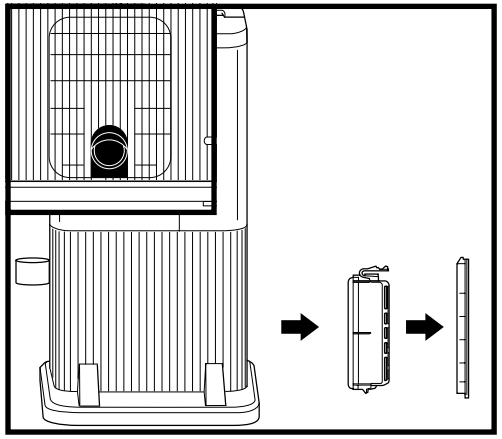

To access the filter in the dock, remove the Filter Door. Press the button at the bottom of the door, then tilt the door and lift it off. Remove the filter from the dock. After the filter has been rinsed and dried, reinstall it by reinserting it into the dock and replacing the filter door.

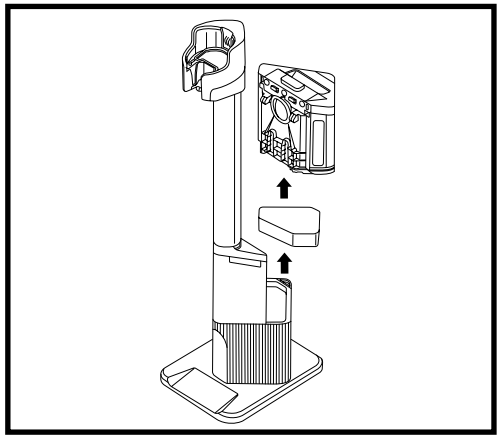

To access the Auto-Empty Exhaust Foam Filter, remove the dust bin. Before removing the Exhaust Foam Filter, vacuum off any fine debris from the surface. Lift the Exhaust Foam Filter out of the dock, then rinse it with water only (do not use soap). Allow the filter to air-dry completely before reinstalling it.

For best results, clean the dock filters at least once a month and replace them regularly. To clean filters, rinse with cold water ONLY to prevent damage from cleaning chemicals. Allow all filters to air-dry for at least 24 hours before reinstalling them to prevent liquid from being drawn into electrical parts. Maintaining the dock filters will ensure successful automatic evacuation.

BRUSHROLL MAINTENANCE

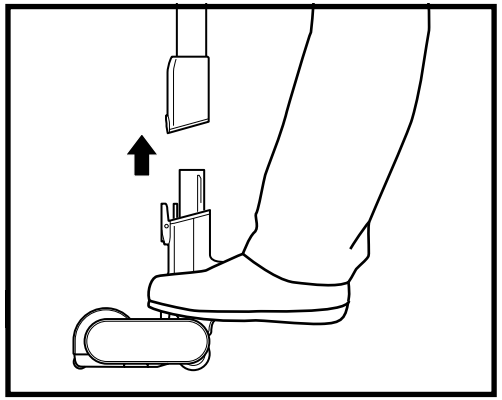

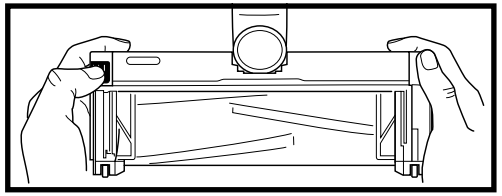

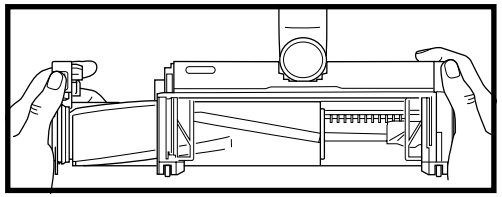

1. Turn off the vacuum.
2. Press the nozzle release button to detach the nozzle from the wand.
3. Press the brushroll release button and slide the brushroll out of the nozzle.
4. Clear any blockages and remove any debris from the brushroll and floor nozzle.
5. Tap off loose debris and wipe the brushroll clean with a dry towel. Hand wash the brushroll if needed, using only water, and then let it air-dry completely for at least 24 hours.
6. When the brushroll is dry, reinstall it into the nozzle by inserting it into the nozzle until it clicks securely into place.

CHECKING FOR BLOCKAGES IN THE VACUUM

If you run over a hard or sharp object or notice a noise change while vacuuming, check for blockages or objects caught in the brushroll.

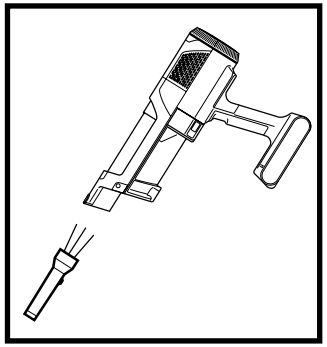

Checking for Blockages in the Hand Vacuum:

1. Turn off the vacuum.
2. Remove the hand vacuum from the wand.
3. Check all intake openings to the dust cup and remove any debris or blockages.

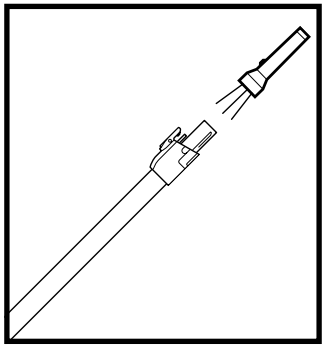

Checking for Blockages in the Wand:

1. Turn off the vacuum.
2. Detach the hand vacuum and floor nozzle from the wand.
3. Check both ends of the wand for blockages and debris.
4. Clear away any debris or blockages.

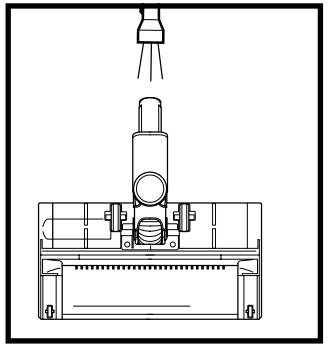

Checking for Blockages in the Floor Nozzle:

1. Turn off the vacuum.
2. Detach the wand from the floor nozzle.
3. Press the brushroll release button and slide the brushroll out of the nozzle.
4. Clear any blockages and release any debris from the brushroll and floor nozzle.
5. Slide the brushroll back into the nozzle, ensuring everything is lined up and in place.

CHECKING FOR BLOCKAGES IN THE AUTO-EMPTY DOCK

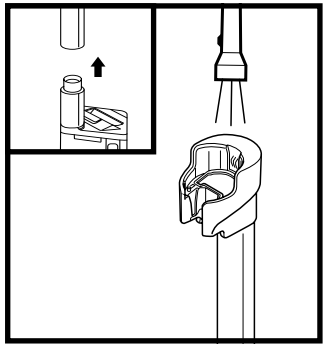

Checking for Blockages in the Charging Post:

1. Unplug the dock.
2. Remove the vacuum from the dock.
3. Press the latch on the back of the charging post and lift the post away from the dock.
4. Check the end of the charging post and top of the dock for any debris or blockages.

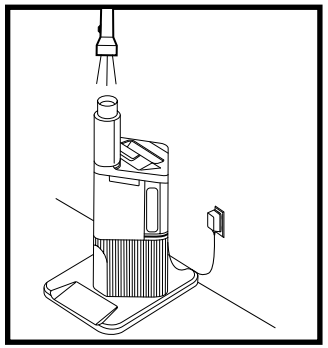

Checking for Blockages in the Dock:

1. Unplug the dock.
2. Remove the vacuum from the dock.
3. Remove the dust bin from the dock.
4. Check the exit for any debris or blockages.

TROUBLESHOOTING

⚠ WARNING: To reduce the risk of shock and unintended operation, turn off power and remove the battery before servicing.

Vacuum is not picking up debris. No suction or light suction. Third indicator light on hand vacuum is solid yellow. (Refer to Checking for Blockages section for more information.)

1. Dust cup may be full; empty dust cup.
2. Check floor nozzle for blockages; clear blockages if required.
3. Remove any string, carpet fibers, or hair that may be wrapped around the brushroll.
4. Check connection between hand vacuum and wand for blockages; clear blockages if required.
5. Check filters to see if they need cleaning. Follow instructions for rinsing and completely air-drying the filters before reinstalling them.

Vacuum lifts area rugs.

1. Make sure you are not engaging BOOST mode. Take care when vacuuming area rugs or rugs with delicately sewn edges.
2. Turn off the unit to disengage from the carpet, then restart.

The brushroll in the floor nozzle doesn't spin.

1. Immediately turn off the vacuum. Remove any blockages before turning the vacuum back on. Make sure the hand vacuum is tilted back far enough for the brushroll to engage while in use.
2. If the floor nozzle has headlights and they are not illuminated, there is a connection issue between the hand vacuum, wand, and nozzle. Try detaching the parts, then reconnecting them.

Vacuum turns off on its own.

There are several possible reasons for the vacuum turning off on its own, including blockages, battery issues, and overheating. If vacuum turns off on its own, perform the following steps:

1. Turn on the vacuum and check the battery indicator lights on the hand vacuum. If recharging is needed, make sure vacuum power is off placing it on the charging dock.
2. Empty dust cup and clean filters (See the Cleaning the Dust Cup and Filter section).
3. Check wand, accessories, and inlet openings and remove any blockages.
4. Allow unit and battery to cool for at least 45 minutes, until they return to room temperature.
5. Press the On/Off switch to restart the vacuum.

Battery Indicator Lights on hand vacuum are flashing.

- ECO, BOOST, and 2 Battery lights are flashing (Fig. A): Clog. (See the Maintaining Your Vacuum section.)

Contact Customer Service at 1-800-798-7398 or sharkclean.com if you experience any of the indications listed below:

- All LEDs are blinking: critical motor failure. Contact call center. (Fig. B)
- All LEDs except ECO are flashing: Motor is overheating. (Fig. C):
- All LEDs except BOOST are blinking: Critical motor failure. Contact call center. (Fig. D)
- 2 Battery LEDs, ECO, and BOOST LEDs are blinking. Critical motor failure. Contact call center. (Fig. E)
- All Battery LEDs and all mode LEDs are blinking. Motor temperature issue. Clean unit and allow it to sit for 20 minutes. (Fig. F)
- 2 Battery LEDs and BOOST LEDs are blinking: Motor temperature issue. Clean unit and allow it to sit for 20 minutes. (Fig. G)
- 2 Battery LEDs and ECO LEDs are blinking: Critical system failure. Contact call center.
- All 4 Battery Icons are pulsing: Floor nozzle temperature issue. Check for clogs/jams, allow it to sit for 20 minutes. (Fig. I)
- First and last Battery icons are blinking: Floor nozzle critical failure. Contact call center. (Fig. J)

Fig. A

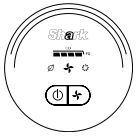
Fig. B

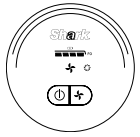
Fig. C

Fig. D

Fig. E

Fig. F

Fig. G

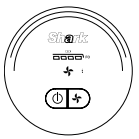
Fig. H

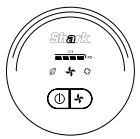
Fig. I

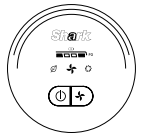
Fig. I

NOTE: If vacuum still does not operate properly, contact Customer Service at **1-800-798-7398** or **sharkclean.com/support**.

ADDITIONAL ACCESSORIES AVAILABLE ON SHARKACCESSORIES.COM

- **A Crevice Tool**
- **B Duster Crevice Tool**
- **C Wide Upholstery Tool**
- **D Pet Multi-Tool**
- **E Replacement Battery**
- **F Hand Vac Pre-Motor Filter**
- **G Auto-Empty Dock Post-Motor HEPA Filter**
- **H Auto-Empty Exhaust Foam Filter**

A

B

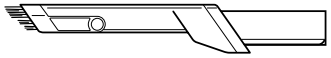

C

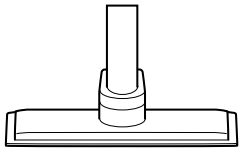

D

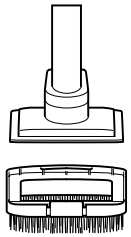

E

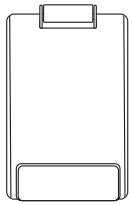

F

G

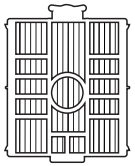

H

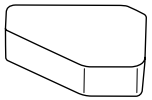

NOTE: Not all accessories come with all units. Please see the enclosed Quick Start Guide for your unit's configuration. To order additional accessories, visit **sharkaccessories.com**.

Shark | NINJA

FIVE (5) YEAR LIMITED WARRANTY

The Five (5) Year Limited Warranty applies to purchases made from authorized retailers of **SharkNinja Operating LLC.** Warranty coverage applies to the original owner and to the original product only and is not transferable.

SharkNinja warrants that the unit shall be free from defects in material and workmanship for a period of five (5) years from the date of purchase when it is used under normal household conditions and maintained according to the requirements outlined in the Owner's Guide, subject to the following conditions and exclusions:

What is covered by this warranty?

1. The original unit and/or non-wearable parts deemed defective, in SharkNinja's sole discretion, will be repaired or replaced up to five (5) years from the original purchase date.
2. In the event a replacement unit is issued, the warranty coverage ends six (6) months following the receipt date of the replacement unit or the remainder of the existing warranty, whichever is later. SharkNinja reserves the right to replace the unit with one of equal or greater value.

What is not covered by this warranty?

1. Normal wear and tear of wearable parts (such as foam filters, HEPA filters, pads, etc.), which require regular maintenance and/or replacement to ensure the proper functioning of your unit, are not covered by this warranty. Replacement parts are available for purchase at **sharkaccessories.com**.
2. Any unit that has been tampered with or used for commercial purposes.
3. Damage caused by misuse (e.g., vacuuming up water or other liquids), abuse, negligent handling, failure to perform required maintenance (e.g., not cleaning the filters, not removing debris from the brushroll), or damage due to mishandling in transit.
4. Consequential and incidental damages.
5. Defects caused by repair persons not authorized by SharkNinja. These defects include damages caused in the process of shipping, altering, or repairing the SharkNinja product (or any of its parts) when the repair is performed by a repair person not authorized by SharkNinja.
6. Products purchased, used, or operated outside North America.

How to get service

If your appliance fails to operate properly while in use under normal household conditions within the warranty period, visit **sharkclean.com/support** for product care and maintenance self-help. Our Customer Service Specialists are also available at **1-800-798-7398** to assist with product support and warranty service options, including the possibility of upgrading to our VIP warranty service options for select product categories. So we may better assist you, please register your product online at registeryourshark.com and have the product on hand when you call.

SharkNinja will cover the cost for the customer to send in the unit to us for repair or replacement. A fee of $25.95 (subject to change) will be charged when SharkNinja ships the repaired or replacement unit.

How to initiate a warranty claim

You must call **1-800-798-7398** to initiate a warranty claim. You will need the receipt as proof of purchase. We also ask that you register your product online at registeryourshark.com and have the product on hand when you call, so we may better assist you. A Customer Service Specialist will provide you with return and packing instruction information.

How state law applies

This warranty gives you specific legal rights, and you also may have other rights that vary from state to state. Some states do not permit the exclusion or limitation of incidental or consequential damages, so the above may not apply to you.

TWO (2) YEAR LIMITED BATTERY WARRANTY

The Two (2) Year Limited Warranty applies to purchases made from authorized retailers of **SharkNinja Operating LLC.** Warranty coverage applies to the original owner and to the original product only and is not transferable.

SharkNinja warrants that the unit shall be free from defects in material and workmanship for a period of two (2) years from the date of purchase when it is used under normal household conditions and maintained according to the requirements outlined in the Owner's Guide, subject to the following conditions and exclusions:

What is covered by this warranty?

1. The original battery deemed defective, in SharkNinja's sole discretion, will be replaced up to two (2) years from the original purchase date.
2. In the event a replacement battery is issued, the warranty coverage ends six (6) months following the receipt date of the replacement battery or the remainder of the existing warranty, whichever is later. SharkNinja reserves the right to replace the unit with one of equal or greater value.

What is not covered by this warranty?

1. Normal wear and tear of the battery, which requires optimal temperature storage and operation to ensure its proper functioning. Replacement batteries are available for purchase at **sharkclean.com/batteries.**
2. A battery that has been tampered with or used for commercial purposes.
3. Damage caused by misuse (e.g., vacuuming up water or other liquids), abuse, negligent handling, failure to perform required maintenance (e.g., not cleaning the filters, not removing debris from the brushroll), or damage due to mishandling in transit.
4. Consequential and incidental damages.
5. Defects caused by repair persons not authorized by SharkNinja. These defects include damages caused in the process of shipping, altering, or repairing the SharkNinja product (or any of its parts) when the repair is performed by a repair person not authorized by SharkNinja.
6. Products purchased, used, or operated outside North America.

How to get service

If your battery fails to operate properly while in use under normal household conditions within the warranty period, visit **sharkclean.com/support** for product care and maintenance self-help. Our Customer Service Specialists are also available at **1-800-798-7398** to assist with product support and warranty service options. So we may better assist you, please register your product online at **registeryourshark.com** and have the product on hand when you call.

SharkNinja will cover the cost for the customer to send in the unit to us for replacement. A fee of $20.95 (subject to change) will be charged when SharkNinja ships the replacement unit.

How to initiate a warranty claim

You must call **1-800-798-7398** to initiate a warranty claim. You will need the receipt as proof of purchase. We also ask that you register your product online at **registeryourshark.com** and have the product on hand when you call, so we may better assist you. A Customer Service Specialist will provide you with return and packing instruction information when you call. A Customer Service Specialist will provide you with return and packing instruction information.

How state law applies

This warranty gives you specific legal rights, and you also may have other rights that vary from state to state. Some states do not permit the exclusion or limitation of incidental or consequential damages, so the above may not apply to you.

REGISTER YOUR PURCHASE

registeryourshark.com

RECORD THIS INFORMATION

Model Number: _____

Date Code: _____

Date of Purchase: _____
(Keep receipt)

Store of Purchase: _____

TIP: You can find the model and serial numbers on the QR code label on the bottom of the back of the hand vacuum and battery.

TECHNICAL SPECIFICATIONS

Voltage: BU3120 series: 18V ⎓
BU3500 series: 21.6V ⎓

BATTERY REMOVAL AND DISPOSAL

This product uses a lithium-ion rechargeable and recyclable battery. When the battery no longer holds a charge, it should be removed from the vacuum and recycled. DO NOT incinerate or compost the battery.

When your lithium-ion battery needs to be replaced, dispose of it or recycle it in accordance with local ordinances or regulations. In some areas, it is illegal to place spent lithium-ion batteries in the trash or in a municipal solid waste stream. Return spent battery to an authorized recycling center or to retailer for recycling. Contact your local recycling center for information on where to drop off the spent battery.

The RBRC™ (Rechargeable Battery Recycling Corporation) seal on the lithium-ion battery indicates that the costs to recycle the battery at the end of its useful life have already been paid by SharkNinja. In some areas, it is illegal to place spent lithium-ion batteries in the trash or municipal solid waste stream and the RBRC program provides an environmentally conscious alternative.

RBRC, in cooperation with SharkNinja and other battery users, has established programs in the United States and Canada to facilitate the collection of spent lithium-ion batteries. Help protect our environment and conserve natural resources by returning the spent lithium-ion battery to an authorized SharkNinja service center or to your local retailer for recycling. You may also contact your local recycling center for information on where to drop off the spent battery, or call 1-800-798-7398.

PLEASE READ CAREFULLY AND KEEP FOR FUTURE REFERENCE.

This Owner's Guide is designed to help you get a complete understanding of your new Shark® Cordless Clean & Empty Stick Vacuum & Auto-Empty System.

SharkNinja Operating LLC
US: Needham, MA 02494
CAN: Ville St-Laurent, QC H4S 1A7

1-800-798-7398
sharkclean.com

Illustrations may differ from actual product. We are constantly striving to improve our products; therefore the specifications contained herein are subject to change without notice.

This product may be covered by one or more U.S. patents. See sharkninja.com/patents for more information.

© 2024 SharkNinja Operating LLC. SHARK is a registered trademark of SharkNinja Operating LLC.
RBRC is a trademark of Rechargeable Battery Recycling Corporation.

BU3000_BU3500Series_IB_E_MP_Mv2

@sharkcleaning