SINGER®

Quantum XL-100

INSTRUCTION MANUAL

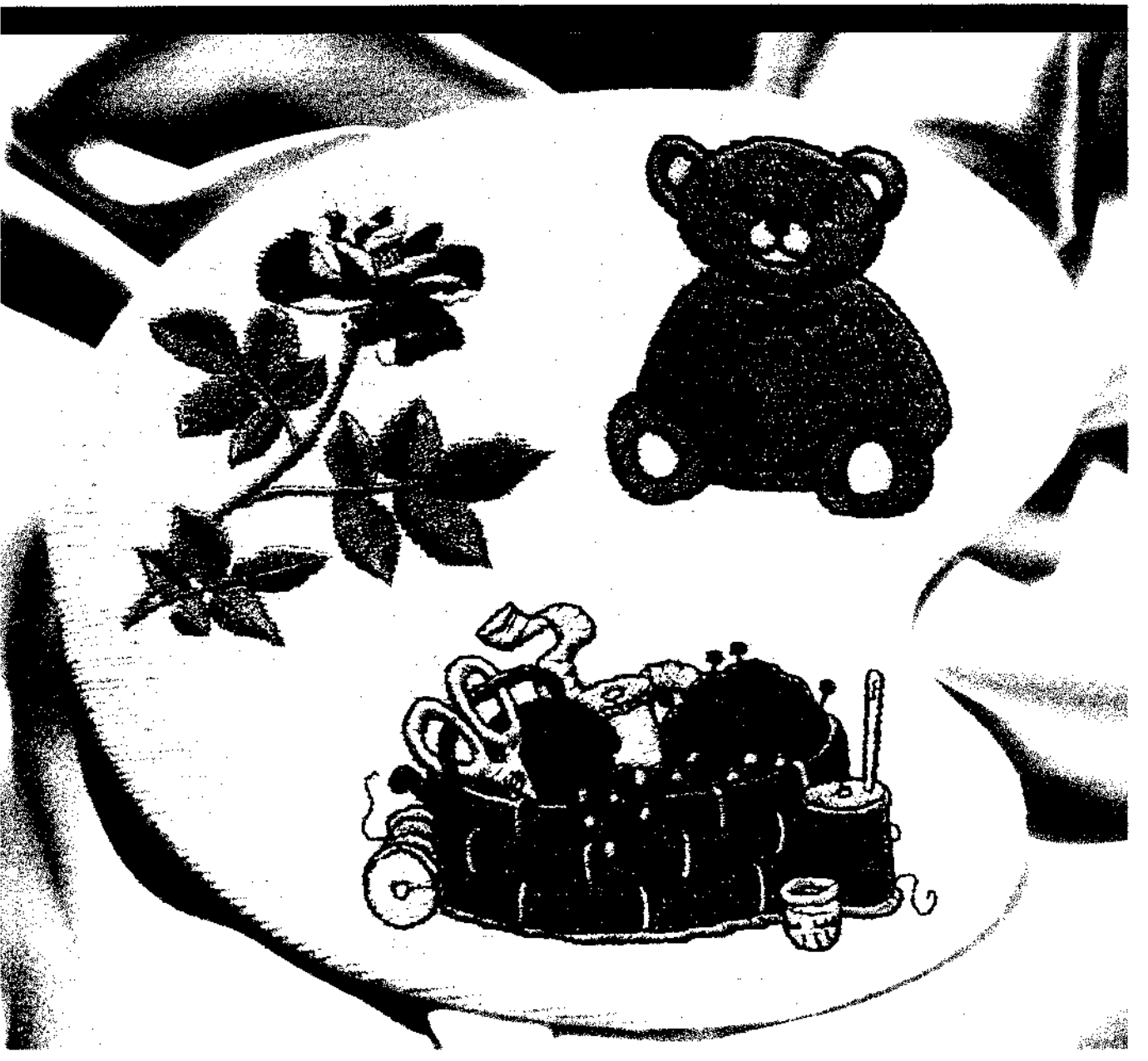

CONGRATULATIONS

...on the purchase of this new Singer* computer sewing machine. To achieve the most enjoyment and satisfaction from this product, it is recommended that the instruction manual be read through step by step while seated in front of the machine. This will help get to know all of its parts and capabilities.

INSTRUCTION BOOK SINGER* QUANTUM XL-100

The manufacturer reserves the right to change the appearance, design, or accessories of this sewing machine as considered necessary without any notification or obligation.

*A trademark of The Singer Company
Copyright 1994 Singer Sewing Company.
All rights reserved throughout the world.

"IMPORTANT SAFETY INSTRUCTIONS"

"When using an electrical appliance, basic safety precautions should always be followed, including the following:"
"Read all instructions before using this sewing machine."

"DANGER—To reduce the risk of electric shock:"

1. "An appliance should never be left unattended when plugged in. Always unplug this appliance from the electric outlet immediately after using and before cleaning."
2. "Always unplug before relamping. Replace bulb with same type rated 5 Watts."

"WARNING—To reduce the risk of burns, fire, electric shock, or injury to persons:"

1. "Do not allow to be used as a toy. Close attention is necessary when this appliance is used by or near children."
2. "Use this appliance only for its intended use as described in this manual. Use only attachments recommended by the manufacturer as contained in this manual."
3. "Never operate this appliance if it has a damaged cord or plug, if it is not working properly, if it has been dropped or damaged or dropped into water. Return the appliance to the nearest authorized dealer or service center for examination, repair, electrical or mechanical adjustment."
4. "Never operate the appliance with any air openings blocked. Keep ventilation openings of the sewing machine and foot controller free from the accumulation of lint, dust, and loose cloth."
5. "Keep fingers away from all moving parts. Special care is required around the sewing machine needle."
6. "Always use the proper needle plate. The wrong plate can cause the needle to break."
7. "Do not use bent needles."
8. "Do not pull or push fabric while stitching. It may deflect the needle causing it to break."
9. "Switch the sewing machine off ("0") when making any adjustments in the needle area, such as threading needle, changing needle, threading bobbin, or changing presser foot, and the like."
10. "Always unplug sewing machine from the electrical outlet when removing covers,lubricating, or when making any other user servicing adjustments mentioned in the instruction manual."
11. "Never drop or insert any object into any opening."
12. "Do not use outdoors."
13. "Do not operate where aerosol (spray) products are being used or where oxygen is being administered."
14. "To disconnect, turn all controls to the off ("0") position, then remove plug from outlet.
15. "Do not unplug by pulling on cord. To unplug, grasp the plug, not the cord."

"SAVE THESE INSTRUCTIONS"

"This sewing machine is intended for household use only."

CONTENTS

Important Safeguards 2
Various Types of Stitches 3
Principal Parts 4,5
Accessories 5
Major Functions 6
Memory Buttons and Pattern Category Buttons 7
Changing Presser Feet 8
  Types of feet and their application
Connecting Machine 9
Winding Bobbin 10,11
Threading Machine 12,13
Trial Sewing! 14,15
  How to operate automatic thread cutter
  How to select needle position
  How to use the thread cutting groove
How to Select Utility Patterns 16
How to Adjust Stitch Length of Utility Patterns 17
  Stitch length of each stitch pattern
How to Adjust Stitch Width of Utility Patterns 18
Automatic Computer Controlled Thread Metering (tension) 19
  How to modify top thread supply.
  How to shirr and gather.
Problem Indicators 20
Fabric, Thread and Needle Table 21
How to Remove and Insert Needle 21

Straight Stitch 22
Back Tack 23
  Changing sewing direction/ pivoting.
  Seam guides/ How to select needle positions.
Zigzag Stitch 24
  How to adjust stitch width.
  Manually adjusted stitch width vs. stitch length.
Overcasting (Overedging) 25
Automatic Buttonholes 26,27
  Purl stitch buttonholes
Sewing Corded Buttonholes 28
Basting Stitch 28
Blindstitch 28,29
Attaching Buttons 30
Four Direction Sewing 31
Balancing Shape of Pattern 31

Pattern Sewing 32,33
  How to select patterns. Pattern modifier keys.
Large Size Pattern Sewing 34,35
  1.Single pattern
  2.Enlarge pattern
  3.Reduce pattern
  4.Mirror pattern
  5.2-color pattern
  6.Position pattern
  7.Repeat pattern

Fun-face Pattern Sewing 36
Regular Pattern Sewing 37
  How to use pattern modifier keys of regular patterns.
Alphabet Stitch Sewing 38
  How to select letter of alphabet.
How to Combine Patterns 39
  Combine upper case and lower case.
  Combination fun-face and alphabet.
How to Correct Patterns in Memory 40
How to Cut Cross-over Stitch 40
Free Arm Sewing 41
Circular Pattern Stitch 42
Heirloom Sewing (Using wing needle) 43
Quilting (Using quilting guide) 43
Patch Work 44
Twin Needle Sewing 45
Pin Tucks 45
Darning/ Free-motion Embroidery 46
Rolled Hemming 47
Even Feeding 47
Inserting Zippers 48
Inserting Invisible Zippers 49
Manual Buttonholes 50
Attaching Cords 51
Optional Accessories 52,53
  Ruffler presser foot
  Pintuck foot/ Open toe embroidery foot
  Darning/Embroidery foot/ Quilter's foot
  Side cutter

Embroidery 54,64
Preparation for Embroidery 56,57
  Attaching/removing embroidery bed.
  Inserting/removing embroidery card.
  Securing material in embroidery frame.
  Attaching/removing embroidery frame.
  Determining location of embroidery.
  Letter embroidery guide
  Initial letter embroidery frame
Sampler Card Patterns of Embroidery 58,59
  Outline embroidery
  Multi-color embroidery
Letters Card of Embroidery 60,61
Example (combination of sampler and upper/lower case script) 62
Troubles in Embroidering 63
  If thread breaks during embroidering:
  To re-embroider troubled pattern from start:
  Helpful messages given on LCD window during embroidering:
Optional Embroidery Cards 64

How to Replace Light Bulb 65
Cleaning 65
How to Replace Needle Threader Hook Holder 65
Performance Checklist 66,67
Part Number of Accessories 68

Be sure to turn power switch OFF before replacing sewing machine needle, or lubricating machine.

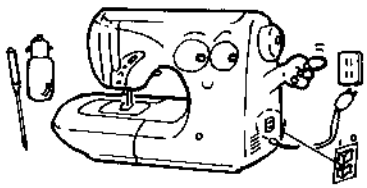

When not in use, be sure to turn power switch OFF and unplug machine.

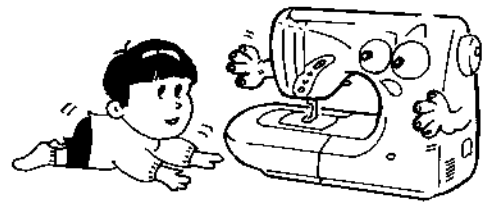

Do not use thinner or other similar solvents to clean machine.

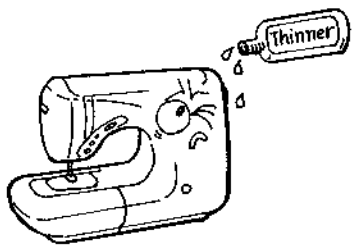

Do not expose machine to direct sunlight or humid atmosphere.

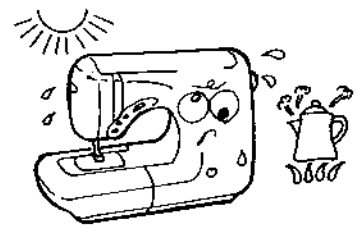

This sewing machine uses a micro computer and precision electronic circuits consisting of semiconductor components, so please observe the following precautions:

- Keep room temperature at 40°F to 100°F. If temperature of room where machine is used is too low, machine may present problems such as failure to reach its normal sewing speed.
- Motor used in this sewing machine is electronically controlled. When the machine is operated for an extended period of time at low speed, safety device will automatically turn machine OFF preventing motor from overheating. If motor should stop while sewing, turn power switch OFF, and wait about 20 minutes. This will reset safety device.

Various Types Of Stitches

- Pattern stitch

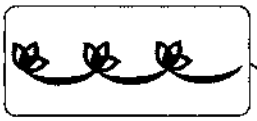

- Embroidery stitch

- Applique

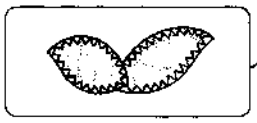

- Buttonholes

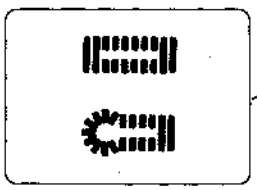

- Overcasting

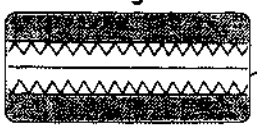

- Blindstitch

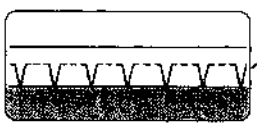

- Reinforcing stretch stitch

- Alphabetical stitch

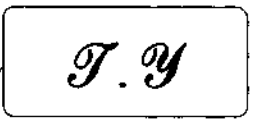

- Free arm sewing

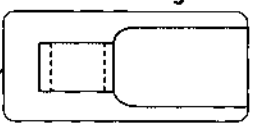

- 3-step zigzag stitch

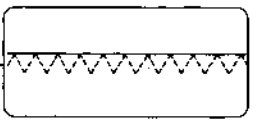

- Attaching buttons

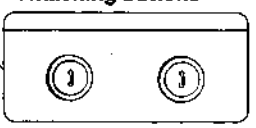

- Zippers

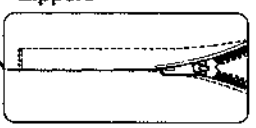

- Rolled hemming

- Attaching cords

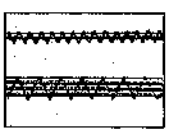

- Patchwork

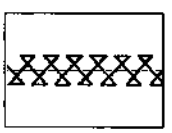

- Heirloom sewing

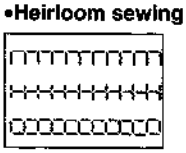

Wing needle

- Straight stitch

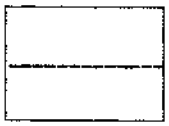

- Zigzag stitch

- Basting stitch

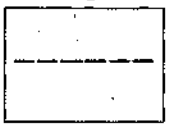

- Circular pattern stitch

- Quilting

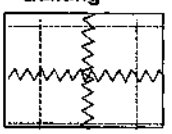

- Pintuck

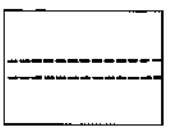

Twin needle

Principal Parts

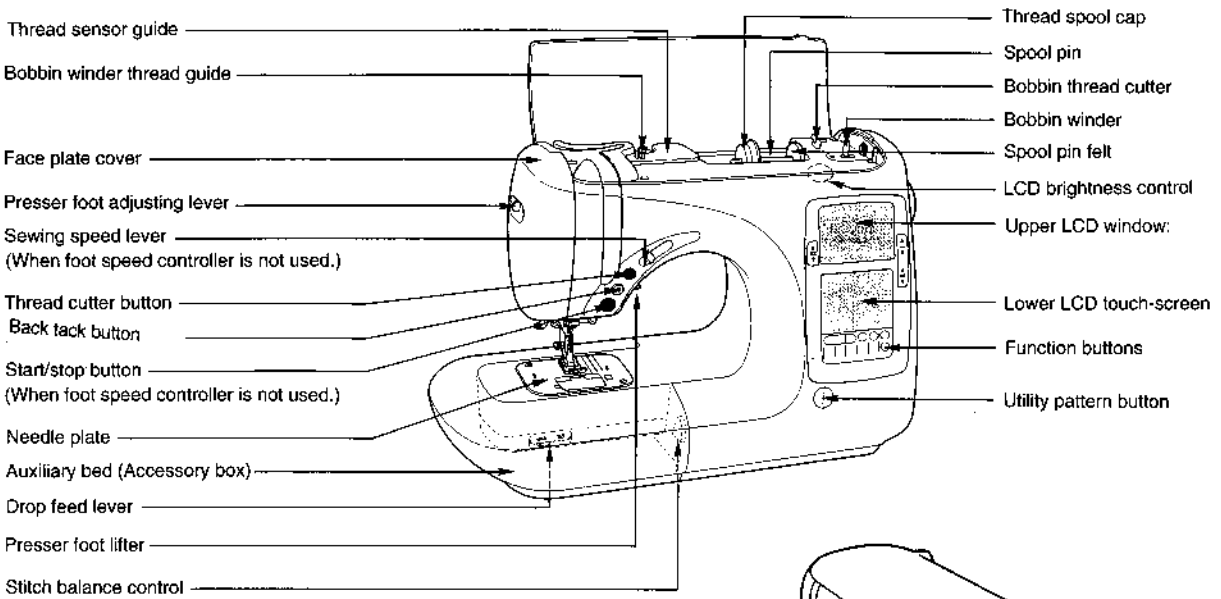

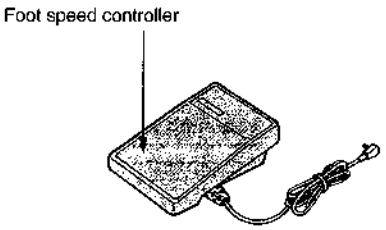

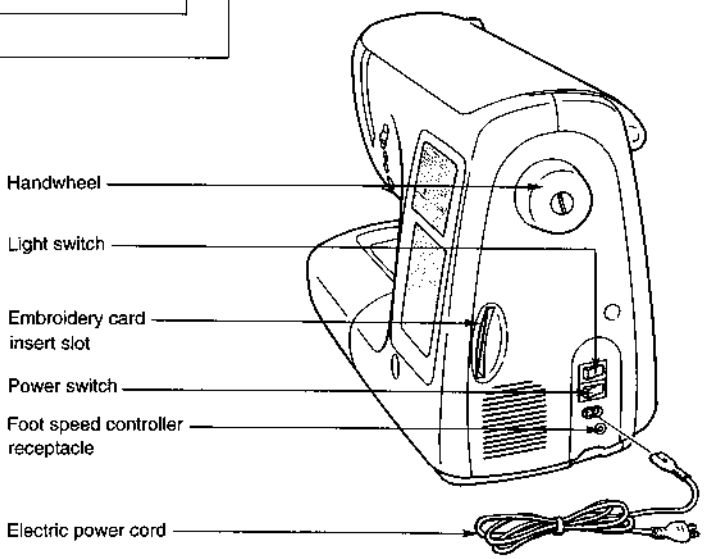

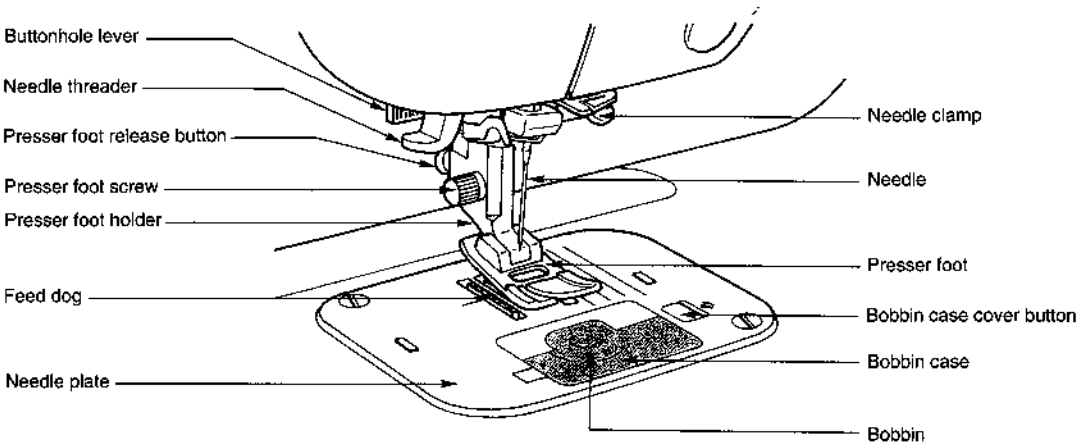

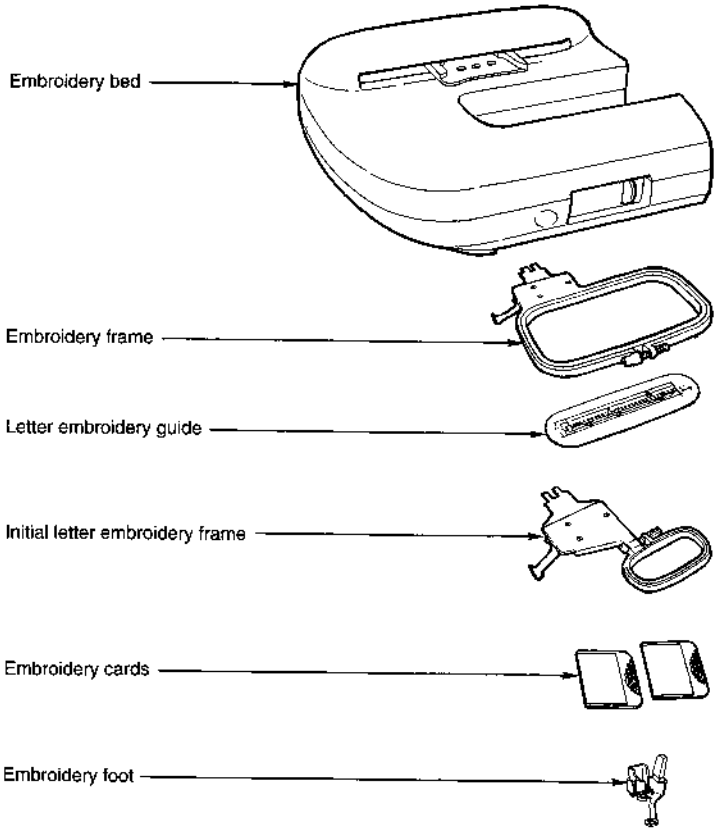

Converting machine to free-arm

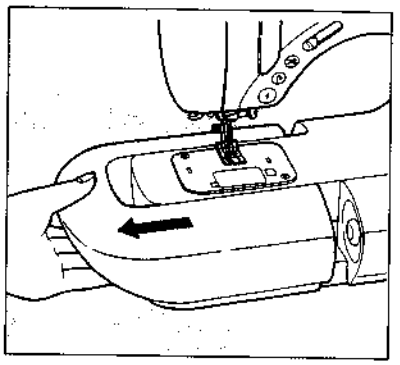

Pull auxiliary bed to left.

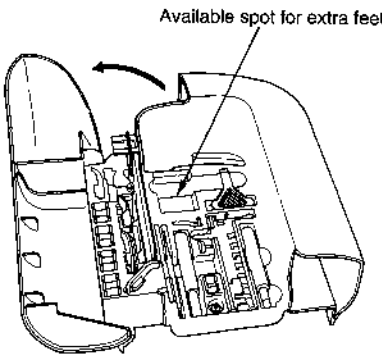

Accessories

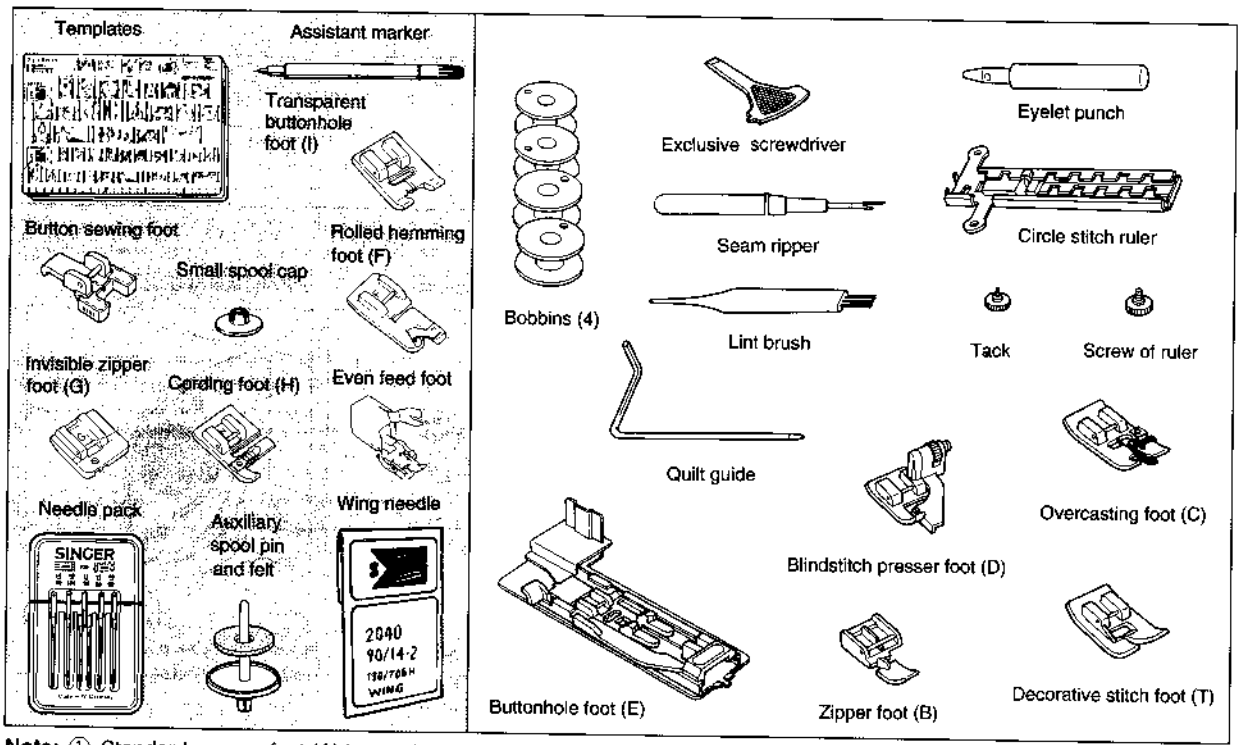

Note: ① Standard presser foot (A) is attached at factory.
② See page 52, 53 for optional accessories.
③ See page 68 for part numbers of accessories.

Major Functions

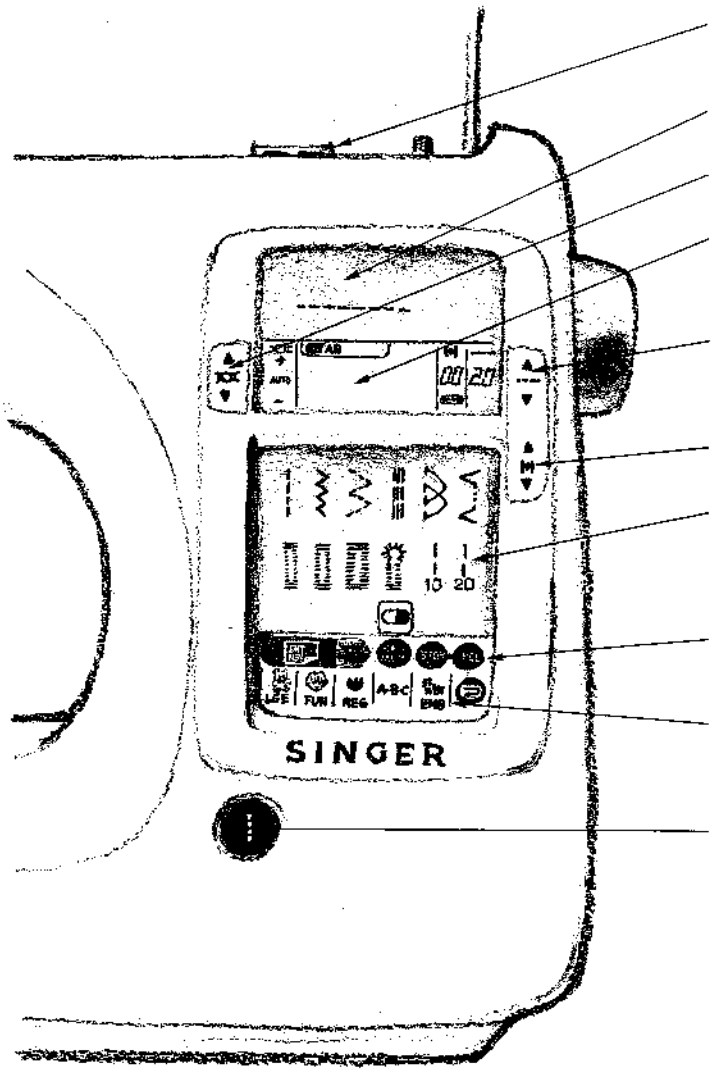

- LCD Brightness control:
  Controls brightness and contrast of upper LCD window and lower LCD touch-screen.
- Upper LCD window:
  View stitch pattern graphics and problem indicators.
- Thread meter override buttons:
  Increases and decreases top thread supply (tension).
- Liquid crystal display:
  Indicates presser foot, stitch length, stitch width, tension, mirror image, turn over, pattern repeat, small abc, two color patterns and memory.
- Stitch length override buttons:
  Increases and decreases stitch length.
- Needle position/stitch width buttons:
  Changes straight stitch needle position and stitch width.
- Lower LCD touch-screen:
  Indicates patterns which may be selected.
- Memory buttons:
  Memorize, clear, review, store and recall patterns.
- Pattern category buttons:
  Used to select large motifs, fun faces, regular, alphabet or embroidery category touch-screens.
- Utility pattern button:
  Instant access to utility pattern screen

Back tack button

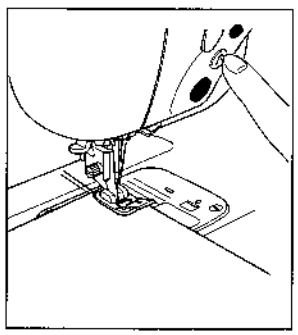

Used to back tack beginning and end of seam.

Thread cutting button

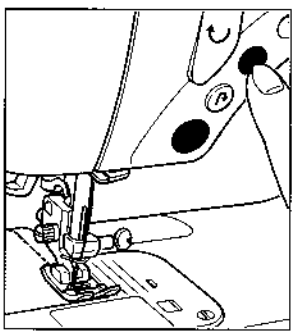

Press button to cut upper and lower thread.

Presser foot pressure

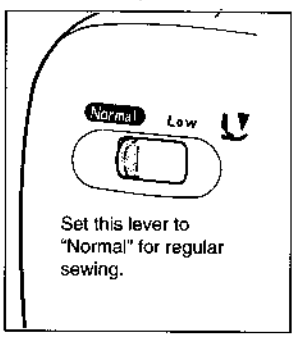

Set this lever to "Normal" for regular sewing.

Adjust pressure of presser foot according to type and thickness of material.

Stitch balance control

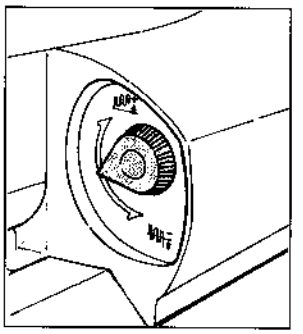

Used to adjust the shape of patterns. (Please see page 31.)

Memory Buttons and Pattern Category Buttons

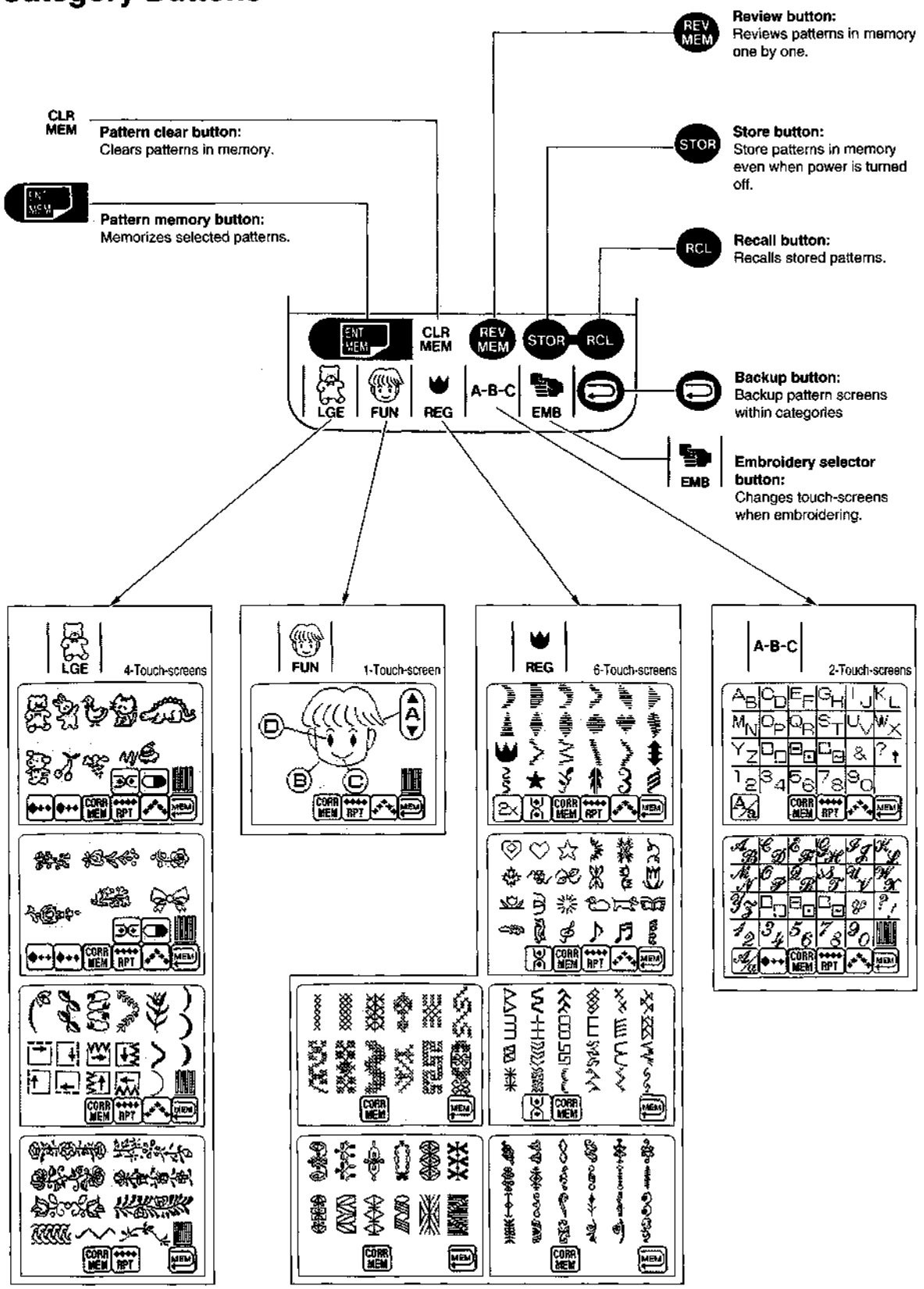

Changing Presser Feet

Place needle in highest position.

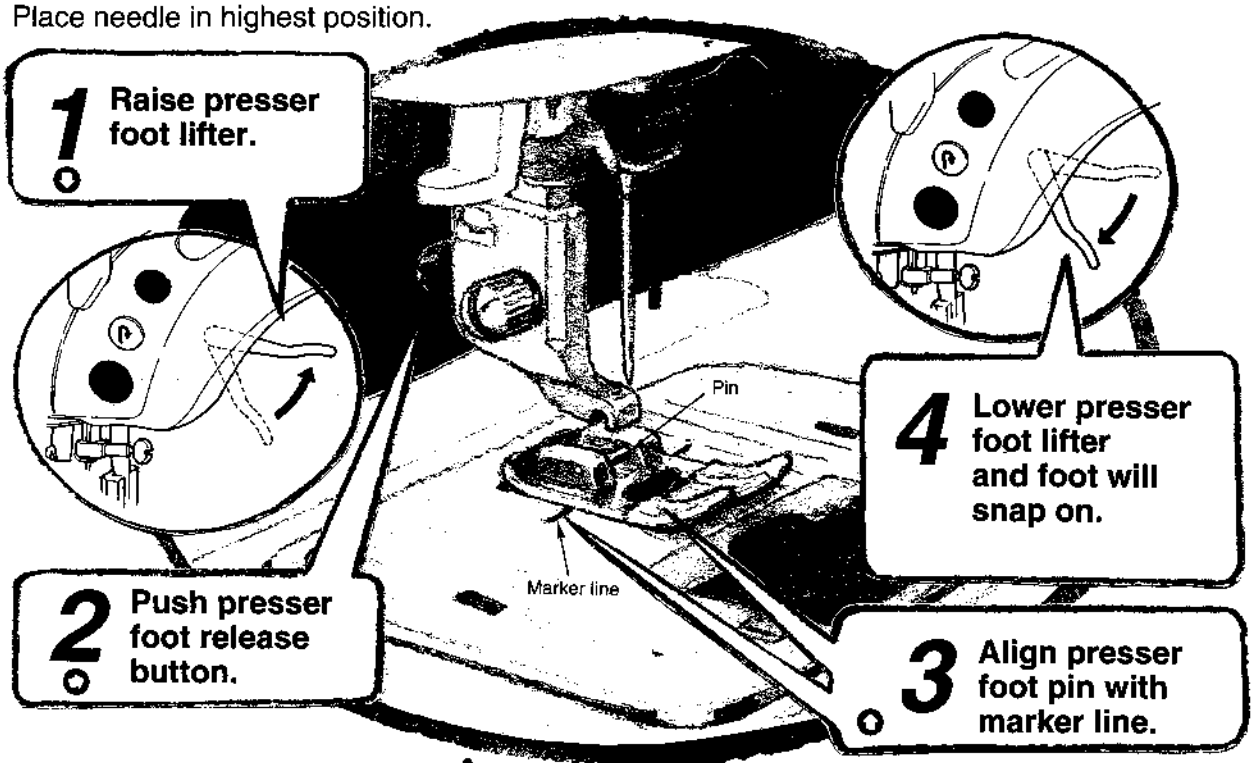

Types of Feet and Their Application

CAUTION: When changing to feet which require removal and replacement of presser foot screw it is mandatory screw is tighted with exclusive screwdriver (see page 47).

	Typical applications	Stitch pattern
Standard presser foot A	Straight stitch Quilting Pintuck	
	Zigzag stitch Applique Quilting	Auto-matic
	Overcasting 3-step zigzag stitch (elastic stitch)	
	Stretch reinforcing stitch	
	Overcasting, etc.	
	Pattern stitch, patchwork, etc.	on REG
Zipper foot B	Inserting zipper	
Overcasting C	Overcasting (Overlocking)	

	Typical applications	Stitch pattern
Decorative stitch foot T	Large motif patterns	LGE
	Fun Face Patterns	FUN
	Regular Patterns	REG
	Alphabet	A-B-C
Blindstitch presser foot D	Blindstitch	
Buttonhole foot E	Automatic buttonholing	

Additional and optional feet and applications are covered on pages 47 through 53.

Connecting Machine

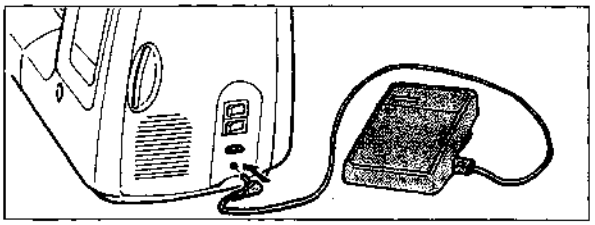

Push foot speed controller plug into lower receptacle at right end of machine.

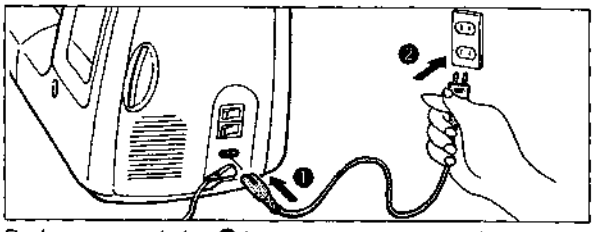

Push power cord plug ❶ into upper receptacle at right end of machine. Plug ❷ into electric outlet.

NOTE: If upper LCD window or lower LCD touch-screen is too bright or dark to see the stitch patterns, adjust LCD brightness control (see page 15).

Running Machine

Power/light switch.

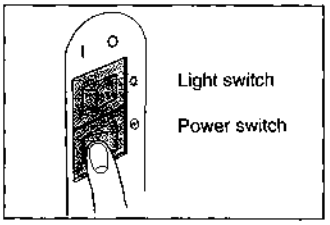

- When "I" side of power switch is pressed machine will be turned on.
- When "O" side of power switch is pressed machine will be turned off.

Note: Power switch must be on before light switch will operate.

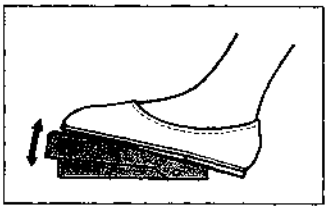

To run machine press foot speed controller. The harder you press, the faster machine will sew.

To stop machine, remove foot from controller.

Running machine without foot speed controller

Foot control must be unplugged for start/stop button and sewing speed lever to operate.

Start/stop button

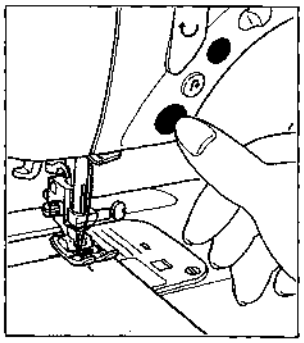

One press on button starts machine, and another press stops machine.

Sewing speed lever

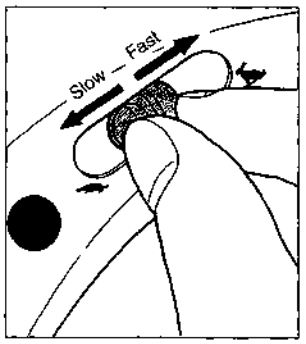

Sliding lever sets desired sewing speed.

Note: #1. When foot speed controller is plugged in, start/stop button can only be used to stop machine.
#2. When foot speed controller is plugged in, sewing speed lever will not operate.

Winding Bobbin

To wind a bobbin follow steps *1* through *9*.

4 **Use both hands to pull thread into groove of thread sensor guide.**

5 **Wind thread around bobbin winder thread guide.**

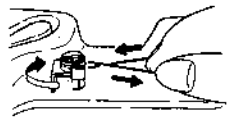

2 **Raise presser foot lifter.**

9 **Place bobbin in bobbin case.**

See diagram *9* A, B and C.

1

A. **Open bobbin case cover.**

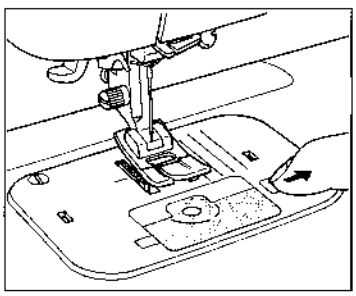

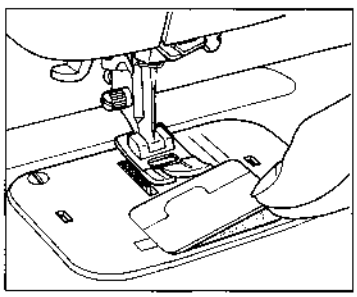

B. **Take out bobbin.**

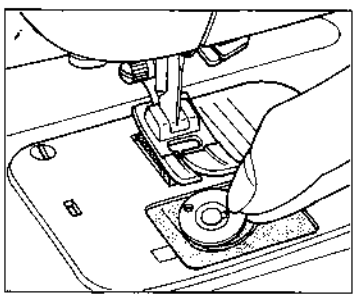

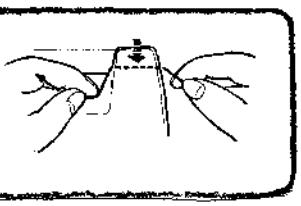

3 Place thread spool and spool cap onto spool pin.

For tubes of thread | For small spool | For large spool

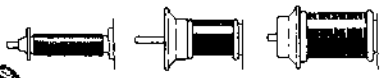

(1) Be sure notch on spool is on right side.
(2) Use cap to hold spool in place.

NOTE: Some size and style spools of thread do not deliver thread smoothly with horizontal spool and spool cap. In this case use vertical auxiliary spool pin.

6 Place bobbin on bobbin winding shaft. Lead thread through one of the holes in bobbin from inside out.

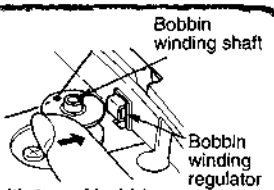

- Press bobbin against winding regulator.
- Hold thread while winding and trim flush with top of bobbin.

8 Push bobbin back to left.

Bobbin will stop turning when full.

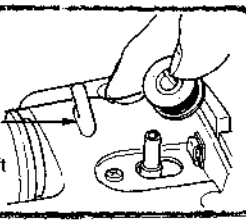

Take bobbin off shaft and cut thread.

7 Hold thread end, depress speed controller to wind bobbin.

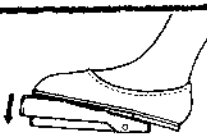

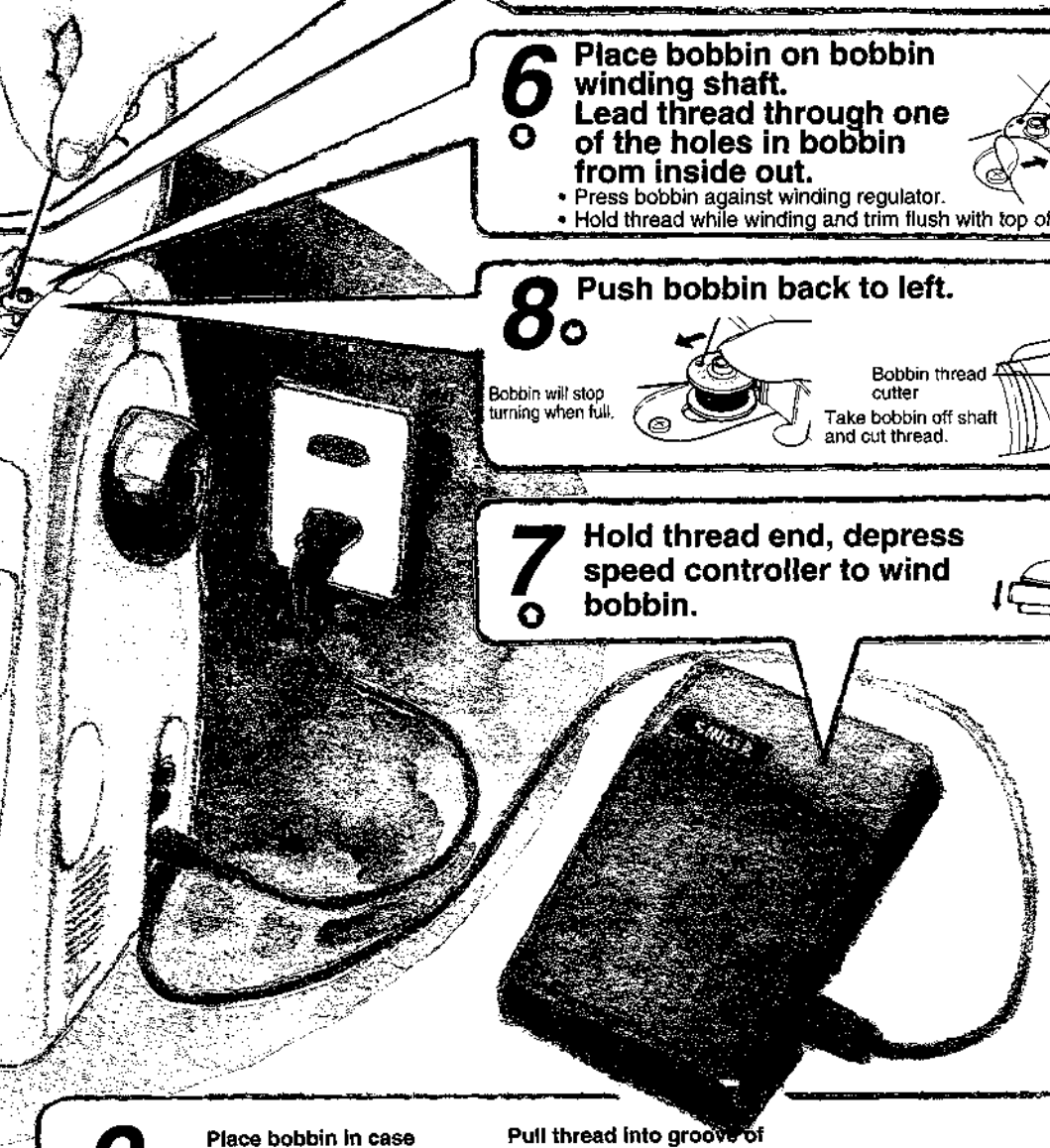

9

A. Place bobbin in case with thread pulling off as illustrated.

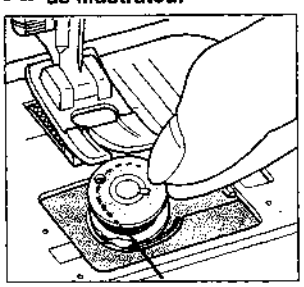

B. Pull thread into groove of bobbin case and draw thread to rear of machine

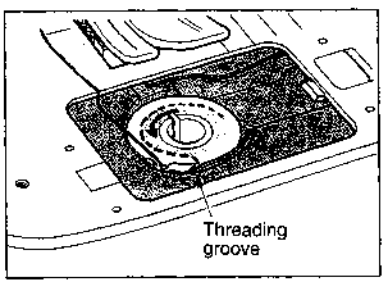

C. Close bobbin case cover.

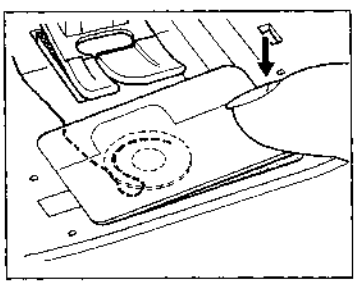

NOTE: Always use Singer 15 class bobbins!

Threading Machine

To thread machine follow steps *1* through *10*.

4 Follow threading path arrows on machine. (4,5,6,7)

3 Use both hands to pull thread into groove of thread sensor guide.

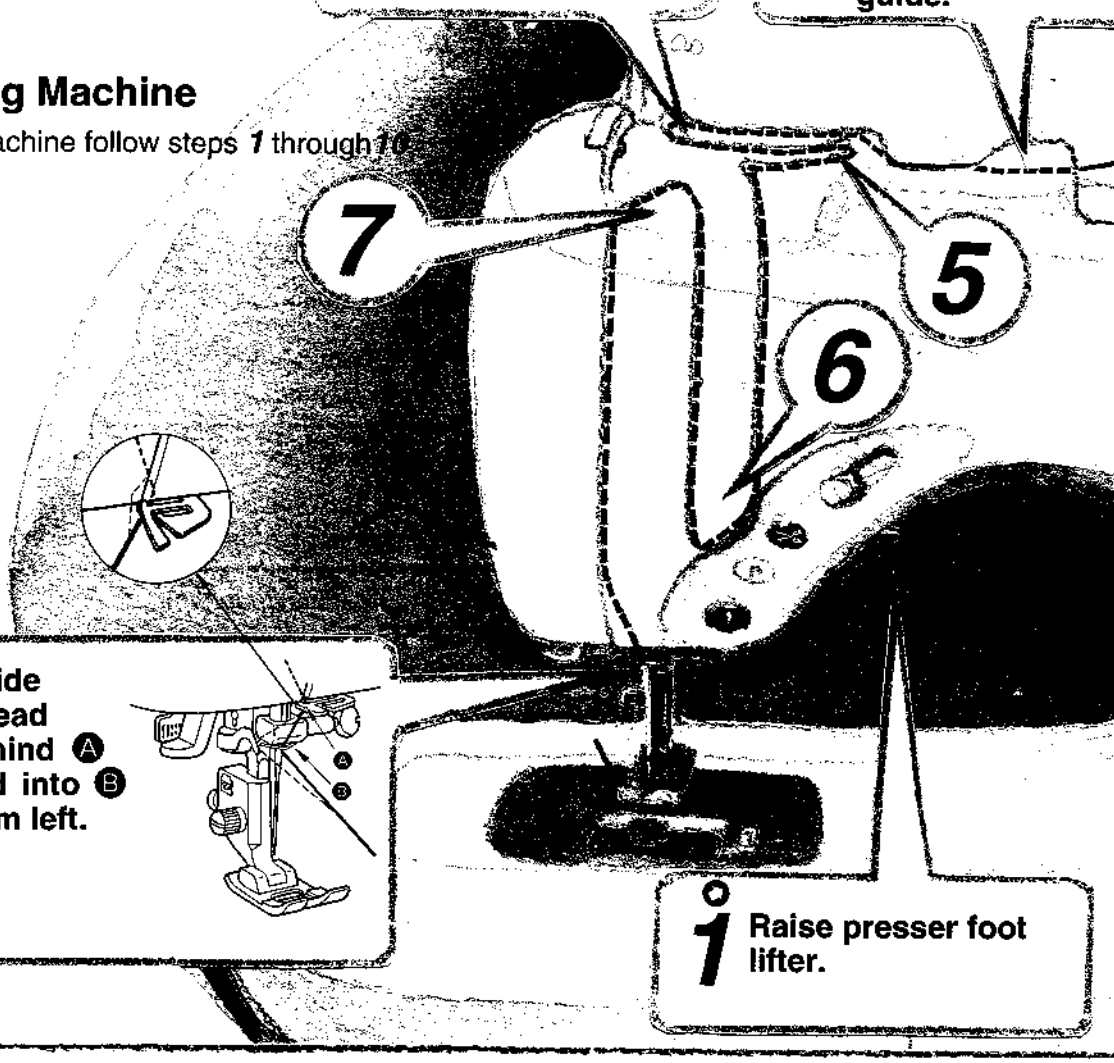

8 Guide thread behind Ⓐ and into Ⓑ from left.

1 Raise presser foot lifter.

9 Automatic Needle Threading

A. Lower presser foot lifter.

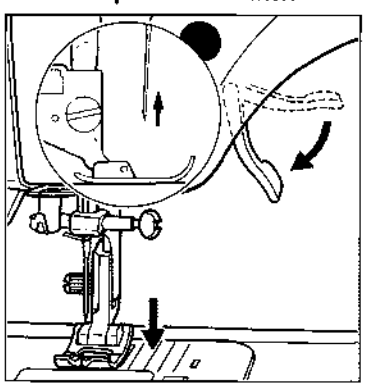

Raise needle to highest position.

B. Push threading lever down.

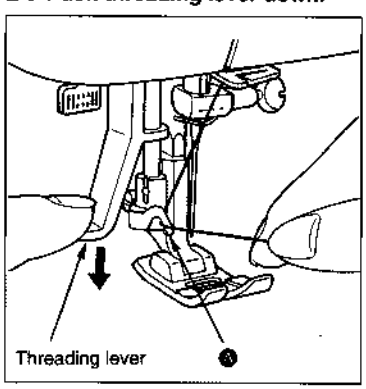

Place thread onto Ⓐ

C. Push threading lever all the way down and a hook will go through eye of needle.

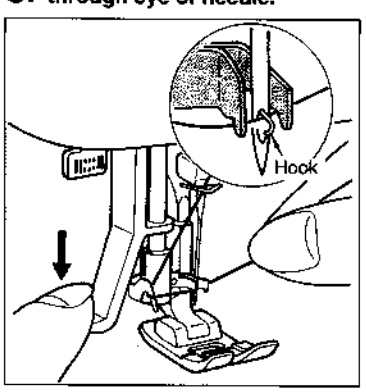

Pass thread in front of needle and below hook.

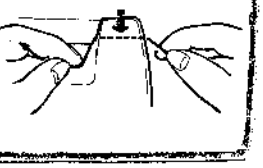

2 Turn handwheel, counterclockwise to raise needle to highest position.

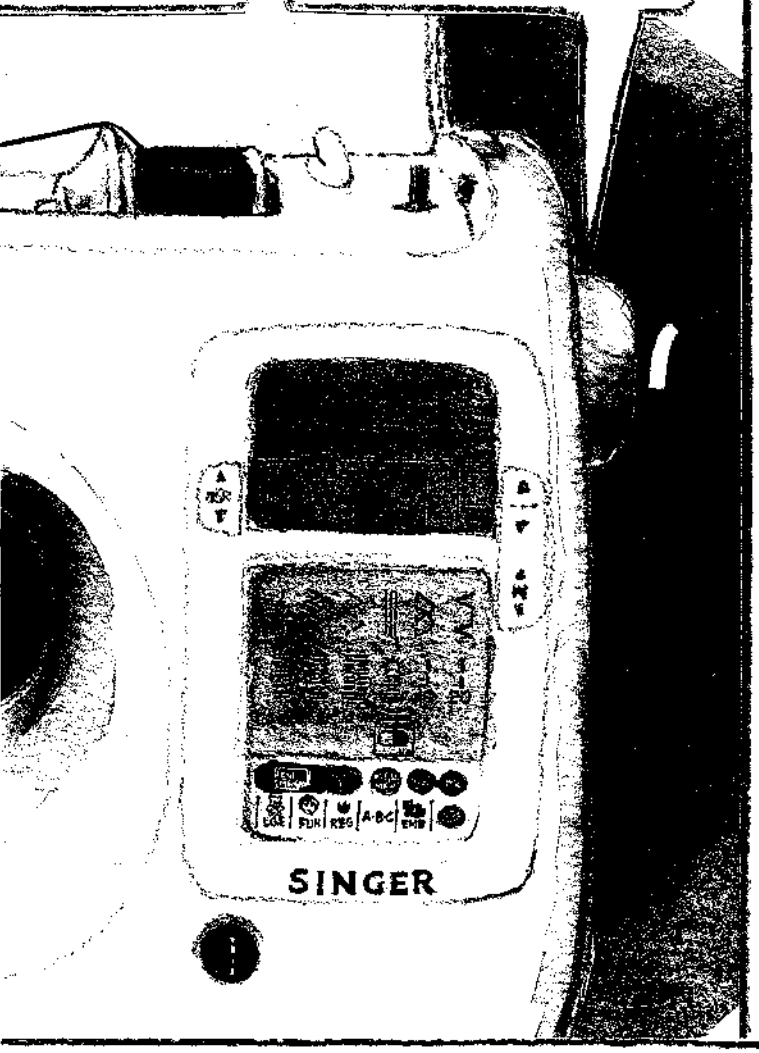

10 Pulling up Bobbin Thread

Hold needle thread lightly with left hand and turn handwheel counterclockwise until needle

A. enters needle plate.

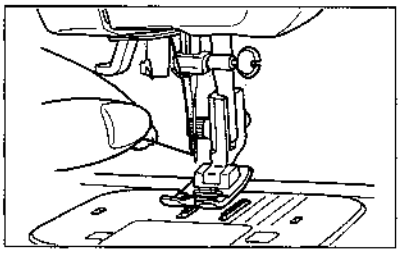

Continue turning handwheel while holding needle thread until needle rises.

Tighten hold on needle thread

B. until bobbin thread is pulled up.

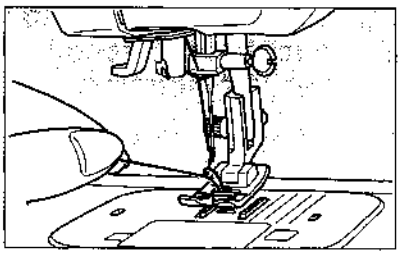

Undo loop with fingers.

Pull both needle and bobbin threads out about 4" and pass them under presser foot to back of

C. machine.

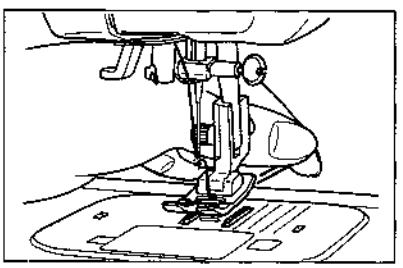

D. Release needle threader.

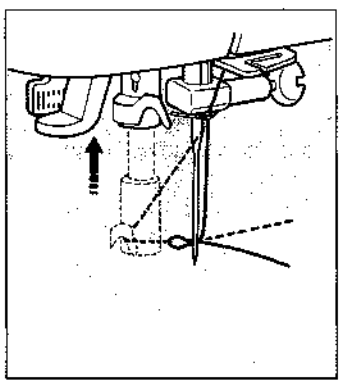

Pull loop of thread that is at back of the needle out about

E. 4".

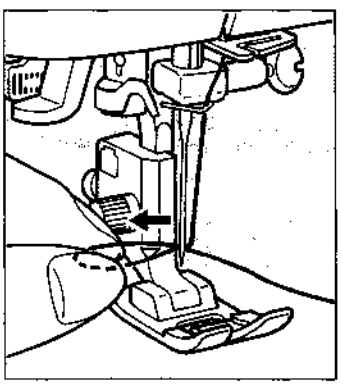

Caution:

1. Do not lower threading lever while sewing machine is in operation.
2. Automatic needle threader will not work on twin needles or wing needles.

Trial Sewing!

When power switch is turned on utility touch-screen illuminates and left position straight stitch is automatically selected.

Upper LCD window

1 Attach correct presser foot for straight sewing. (A)

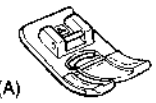

2 Pull both needle and bobbin threads to back of machine.

3 Position fabric under presser foot.

4 Lower presser foot lifter.

After automatic thread cutter is used, it is not necessary to bring bobbin thread to top.

6 How to Operate Automatic Thread Cutter

A. Wait until needle stops completely in down position.

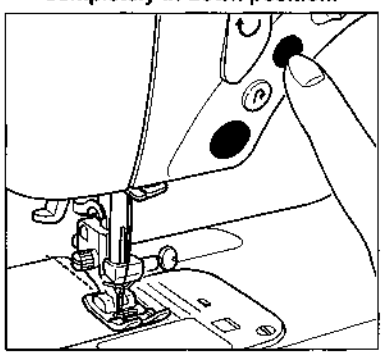

Press thread cutting button.

B. Release button.

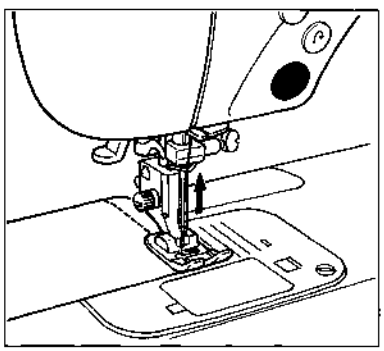

Needle moves to up position.

C. Raise presser foot lifter.

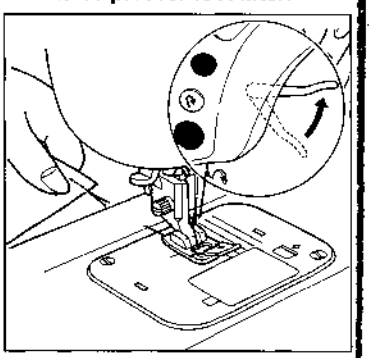

Remove fabric.
NOTE: Use thread cutting groove located at back of presser foot for cutting thick or special types of thread.

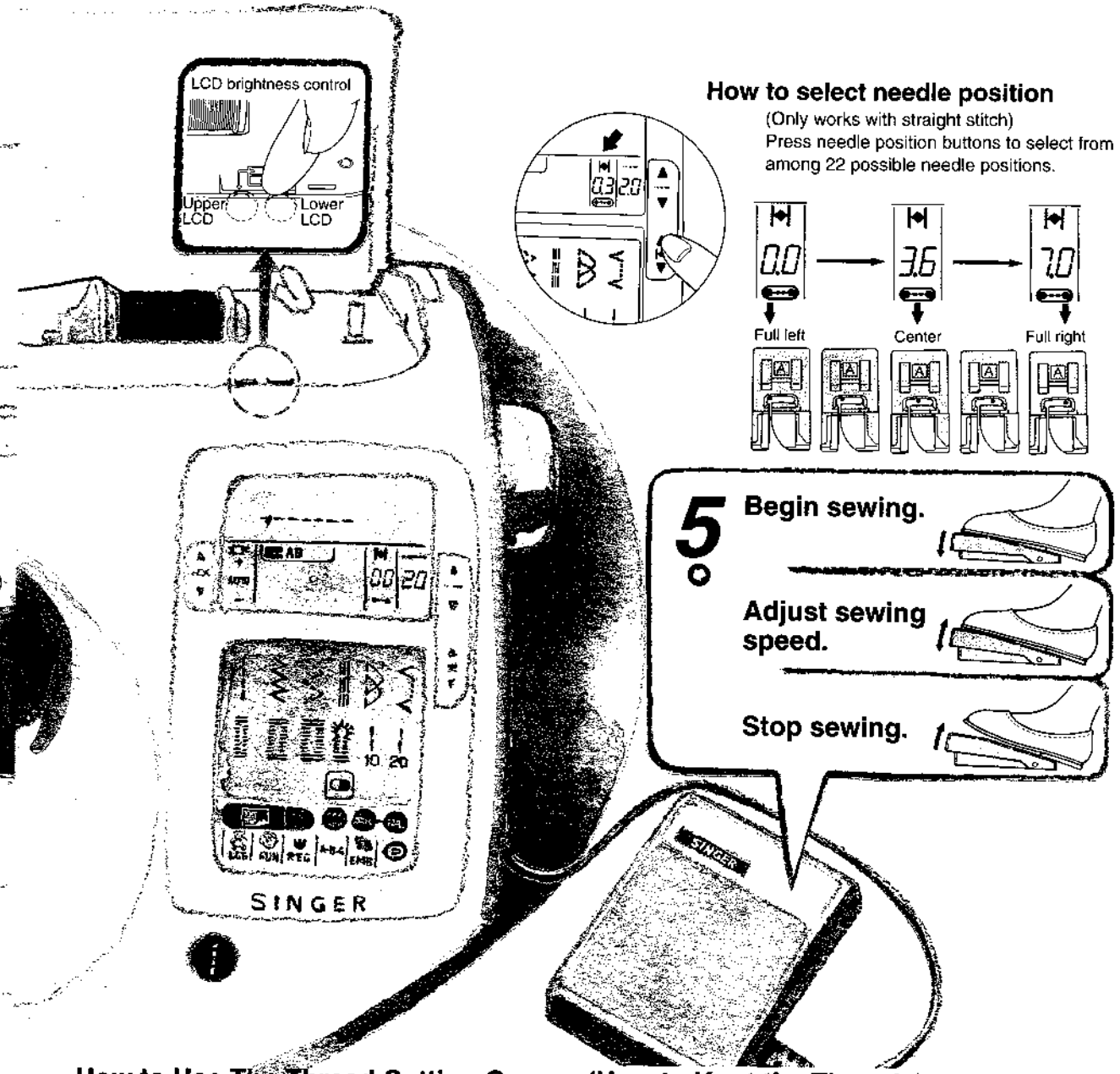

How to select needle position

(Only works with straight stitch)
Press needle position buttons to select from among 22 possible needle positions.

5 **Begin sewing.**

Adjust sewing speed.

Stop sewing.

How to Use The Thread Cutting Groove (How to Knot the Threads)

1 **Remove material from machine.**

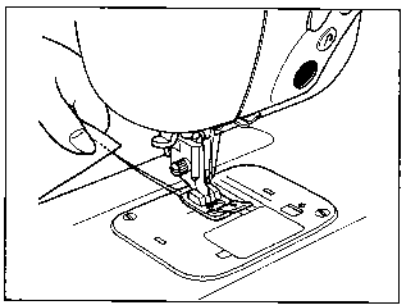

After finishing a seam, raise needle and presser foot, and slowly pull material from under presser foot.

2 **Cut threads, using thread cutting groove.**

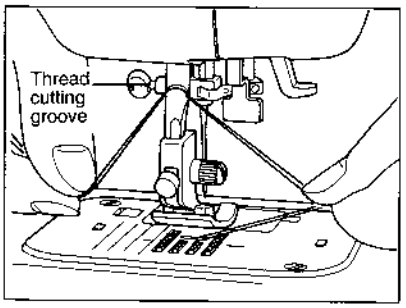

Hold upper and bobbin threads together, pull them out about 4" and cut them with thread cutting groove located at rear of presser foot.

3 **Knot two threads on wrong side of fabric.**

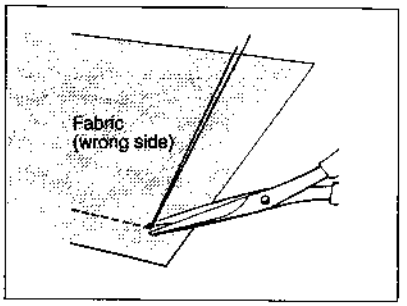

Pull upper thread to wrong side of fabric, and knot upper and bobbin threads. Cut threads as close to knot as possible. This technique is useful for securing pattern stitches.

Note: It is advisable to use automatic thread cutter at end of a seam.
Use thread cutting groove located at back of presser foot for cutting thick threads or special types of thread.

How To Select Utility Patterns

Touch utility pattern button ⓘ, then touch desired utility pattern. Upper LCD window will indicate selection.

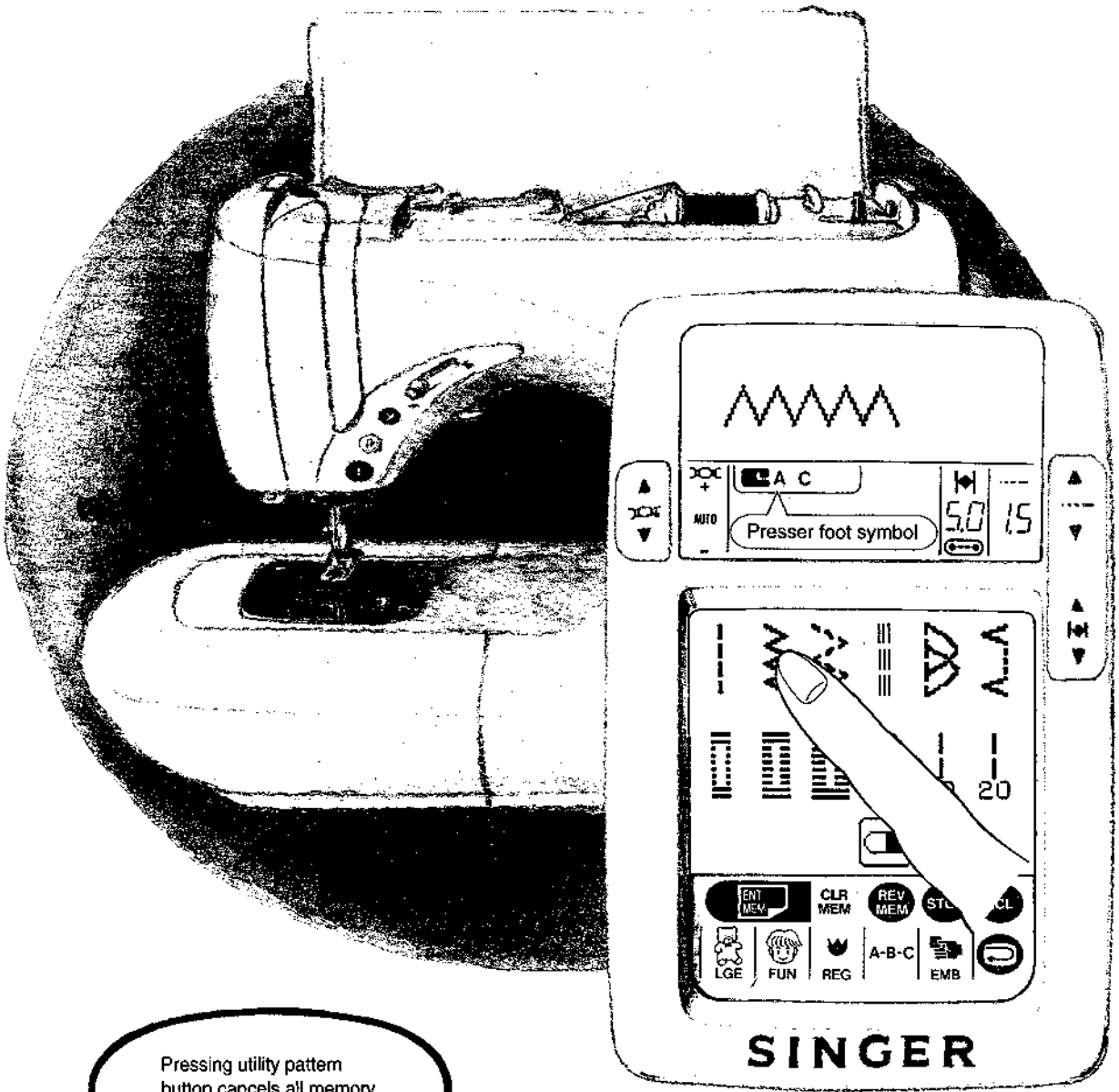

Pressing utility pattern button cancels all memory except stored memory.

Utility Pattern Button
Instant access to utility patterns

How to Adjust Stitch Length of Utility Patterns

Machine's stitch patterns are automatically set to an optimum length.
By using override buttons pattern length can be adjusted as desired.

How to use stitch length manual override buttons.

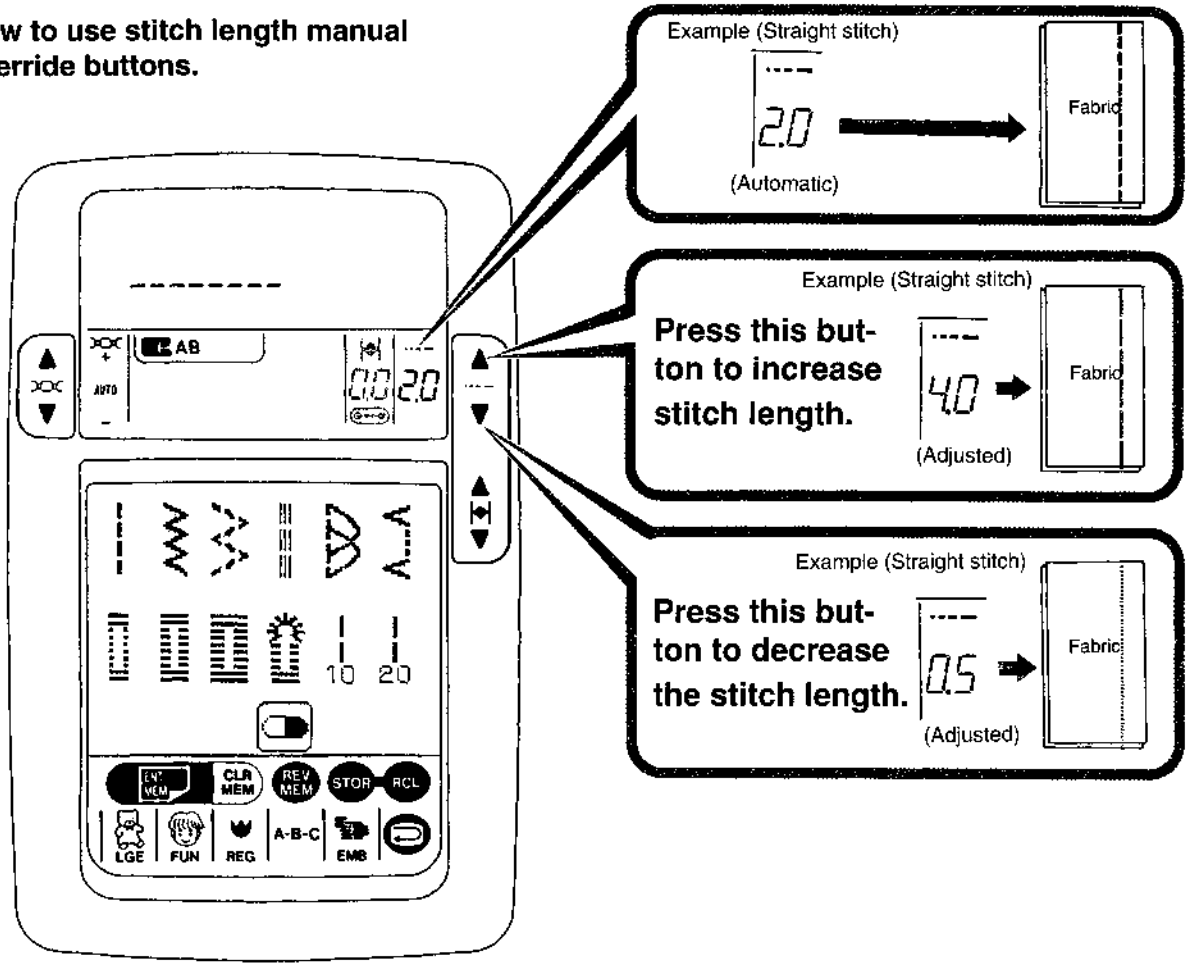

Stitch Length of Each Stitch Pattern

Stitch pattern	Stitch length	
	Automatic	Adjusted
	2.0	0.0~4.0
	1.5	0.0~4.0
	1.0	0.0~4.0
	- -	- -
	2.0	0.0~4.0
	Bartacked 0.5 Keyhole 0.6	0.0~1.0
10 20	- -	- -

Stitch pattern	Stitch length	
	Automatic	Adjusted
on LGE	0.4	0.0~4.0
on REG	0.4	0.0~4.0

NOTE: (- -) indicates that pattern cannot be adjusted using stitch length button.
When stitch length displays (- -) the pattern may be adjusted with stitch balance control (see page 31).

How to Adjust Stitch Width of Utility Patterns

After specifying pattern from among , if desired, the stitch width may be adjusted by pressing stitch width buttons.

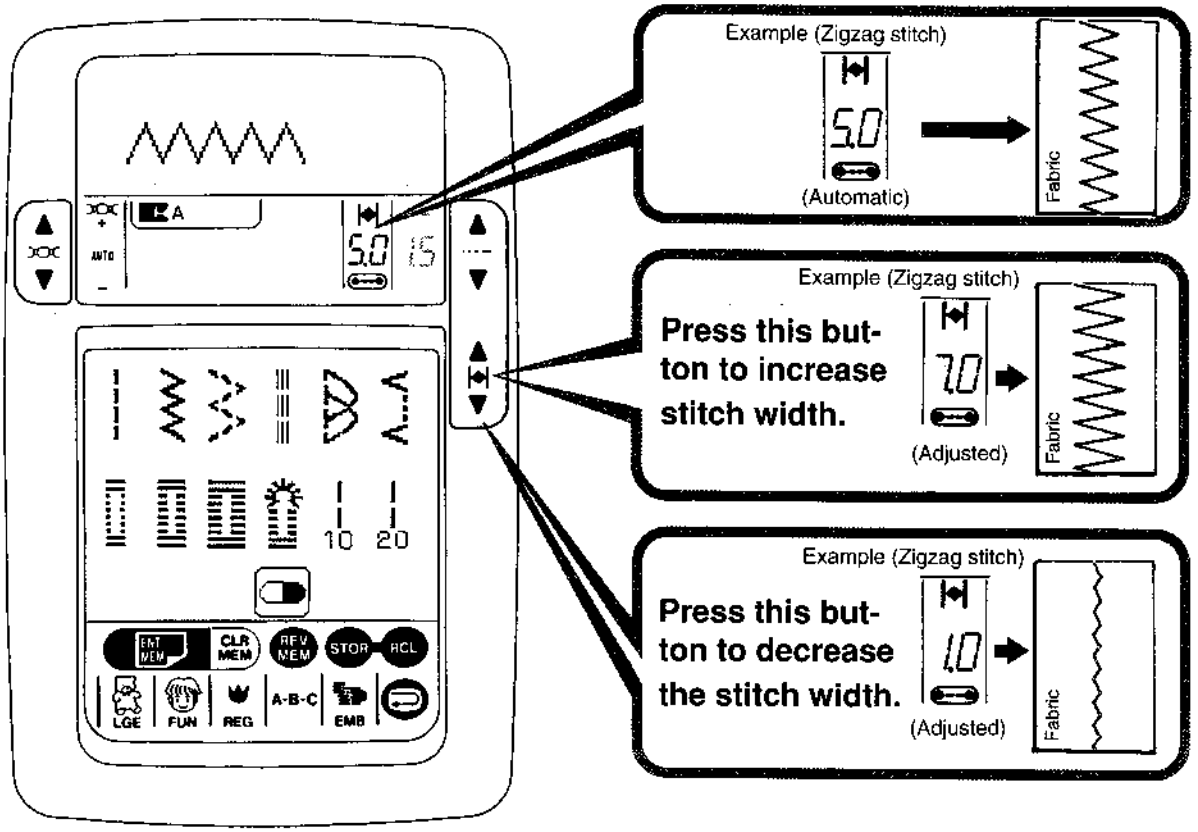

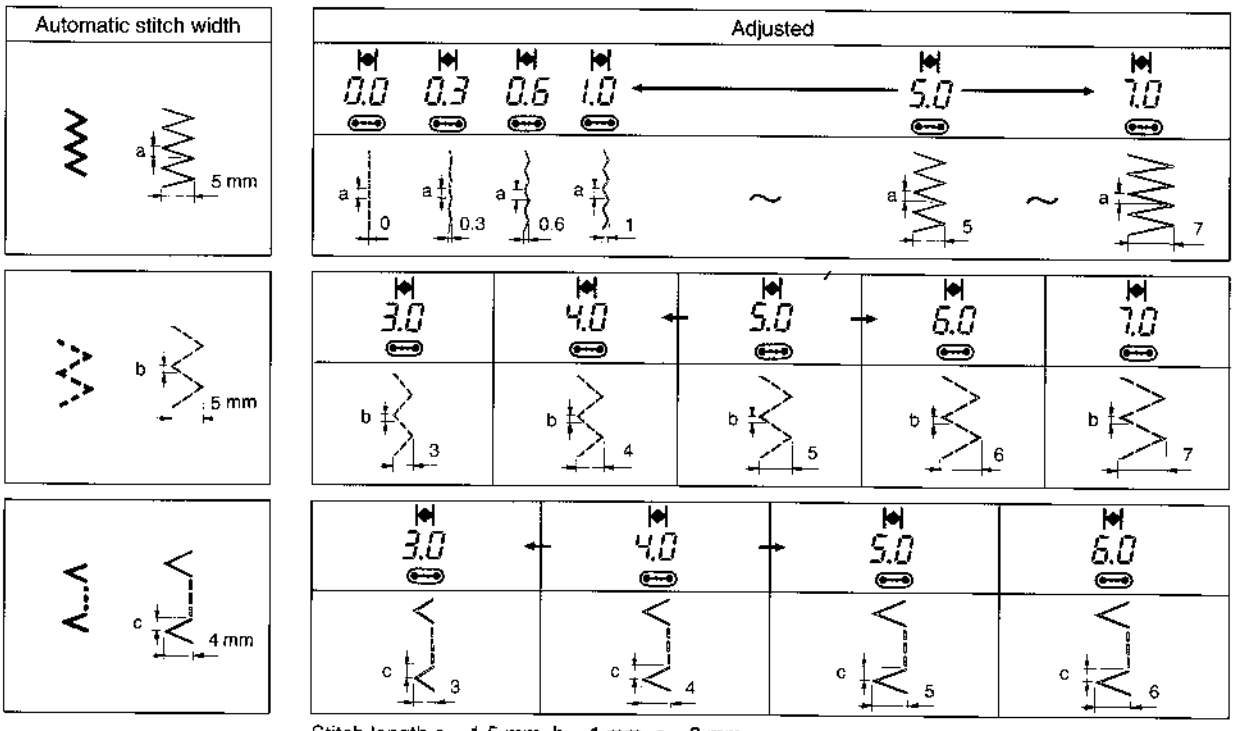

Stitch length a = 1.5 mm, b = 1 mm, c = 2 mm

Automatic Computer Controlled Thread Metering (tension) System

Instead of a mechanical tension system, which controls thread by squeezing it between 2 discs, the XL-100 controls thread by computer. An automatic computer controlled thread metering system delivers the precise amount of thread for each needle penetration to create the optimal appearance of each stitch. This makes possible, perfectly balanced straight stitch, plus no pucker blind hemming, two color patterns without changing thread, multicolored embroidery without changing bobbin thread, and decorative top-stitching and cross stitching that simulate hand sewn. An override control allows individual modification for specialized effects.

Examples of Automatic Thread Metering:

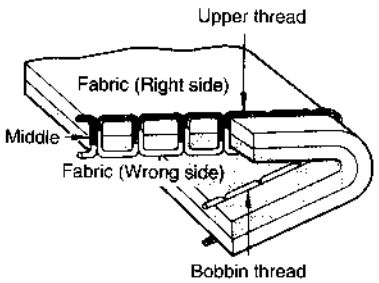

Straight stitch: Upper and bobbin thread join in middle.

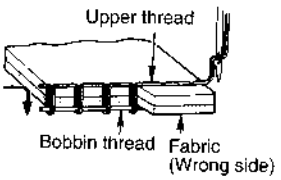

Embroidery and decorative topstitch patterns: Upper and bobbin thread join on wrong side of fabric to optimize top side appearance.

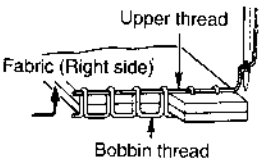

Two-color patterns: Upper and bobbin thread join on right side of fabric.

How to modify top thread supply.

Use thread meter override buttons to modify top thread supply (tension).

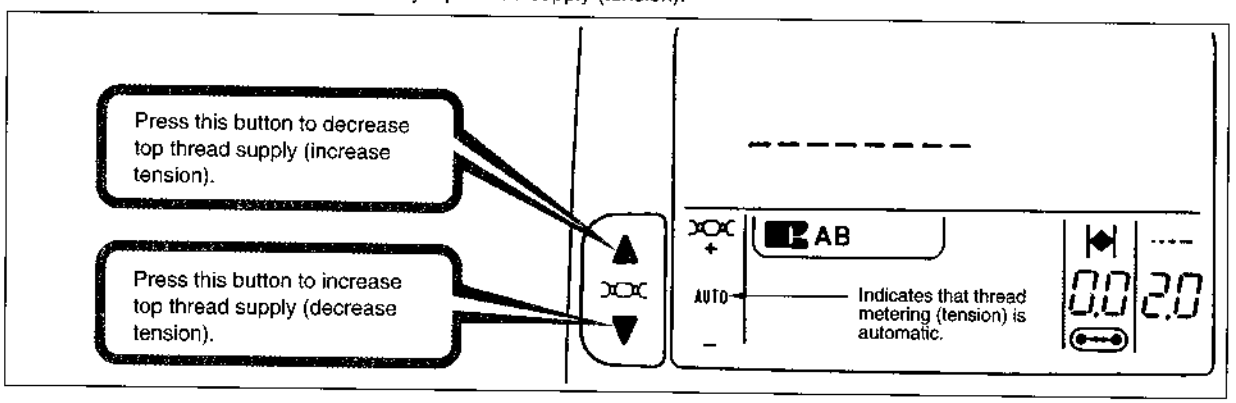

How to shirr and gather.

When shirring an armhole or skirt waist, or gathering cuffs or yokes, sew with a long thread length, then pull bobbin thread by hand to gather material.

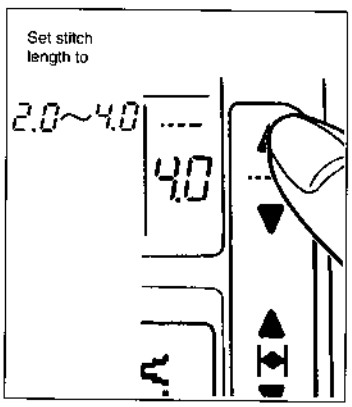

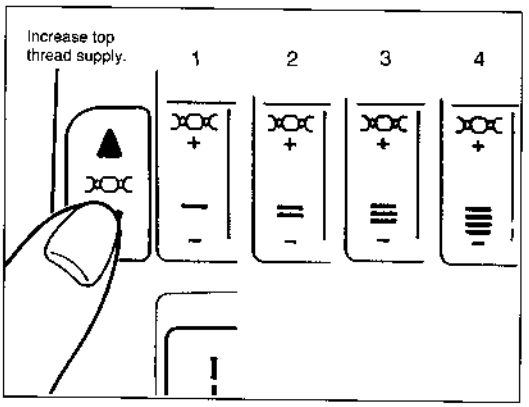

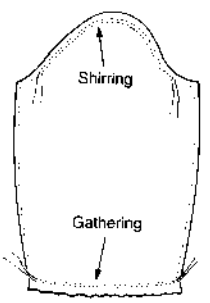

Problem Indicators

If machine has not been properly set to sew, a problem indicator will appear in LCD window advising where problem is located.

Problem indicators, cause & solution	Problem indicators, cause & solution
Lower presser foot. 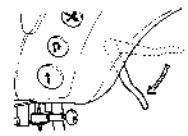	Raise needle.
• Bobbin winding shaft was left in right position after winding. • Move bobbin winding shaft back to left position.	Lift presser foot lifter.
Lower buttonhole lever. Buttonhole lever has not been pulled down. (See page 26, 27.) 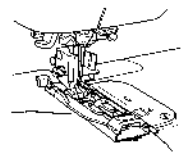	Place embroidery frame on machine. Place embroidery frame in position on machine.
Check needle thread. 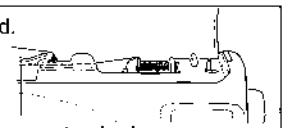 1)Upper thread has run out or broken or 2)Thread is not in thread sensor guide.	Change to full size embroidery frame.
Select a pattern. Select one of patterns shown on lower screen.	Embroidery card is not installed. Turn off power and install card properly.
Machine does not accept this operation.	This card cannot be used. Change it with another one.
Memory error Memory is full.	Delete pattern with clear key.
Indicates pattern is being stored in memory after STOP key is pressed.	Lower presser foot lifter.
Indicates pattern is being recalled from memory after RCL key is pressed.	Change needle thread to a different color.

Fabric, Thread And Needle Table

Your fabric will determine choice of needle and thread. The following table is a practical guide to needle and thread selection. Always refer to it before a new sewing project. And be sure to use same size and type of thread in bobbin as in top thread supply.

Fabric	Thread	Needles	
Fabrics below can be of any fiber, cotton, linen, silk, wool, synthetic, rayon, blends. They are listed as examples of weight.		Failure to use a Singer brand needle may result in skipped stitches or poor sewing performance.	
		TYPE	SIZE
Very Lightweight•Batiste, Chiffon, Organza, Voile. Also all microfiber or microdenier fabrics.	Cotton-Wrapped polyester core (extra fine) Long fiber polyester (extra fine)	2020 red shank	9/70 or 11/80 orange band
Lightweight•Challis, Chambray, Charmeuse, Crepe de Chine, Gauze, Handkerchief Linen, Silk, Taffeta, Tissue faille.	Cotton-wrapped polyester core (all purpose) Long fiber polyester (two spun)	2020 red shank	11/80 orange band
Medium-weight•Broadcloth, Brocade, Chino, Chintz, Corduroy, Flannel, Linen, Poplin, Satin, Synthetic, Suedes, Taffeta, Terry, Velvet.	Cotton-wrapped polyester core (all purpose) Long fiber polyester (two spun)	2020 red shank	14/90 blue band
Medium to Heavy-weight•Coating, Damask, Denim, Drapery Fabric, Fake Fur, Gabardine, Ticking, Woolens.	Cotton-wrapped polyester core (all purpose) Long fiber polyester (two spun)	2020 red shank	16/100 purple band
Heavy-weight•Canvas, Duck, Sailcloth, Upholstery Fabric.	Cotton-wrapped polyester core (all purpose) Long fiber polyester (two spun)	2020 red shank	18/110
Leather		2032 leather	
Knits•Jersey, Tricot, Single Knit	Cotton-wrapped polyester core (all purpose) Long fiber polyester (two spun)	2045 yellow shank	11/80 orange band
Sweatshirt•Double Knit, Swimwear, Sweater Knit	Cotton-wrapped polyester core (all purpose) Long fiber polyester (two spun)	2045 yellow shank	14/90 blue band

* Use with standard sewing thread in bobbin.

How to Remove and Insert Needle.

CAUTION: Make sure power/light switch is off before inserting needle.

1 Removing needle

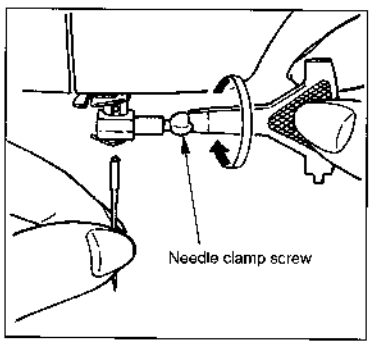

(1) Turn handwheel counterclockwise until the needle reaches highest position.
(2) Loosen needle clamp screw with exclusive screwdriver.

2 Attaching needle (Needle cannot be inserted unless it is correctly positioned.)

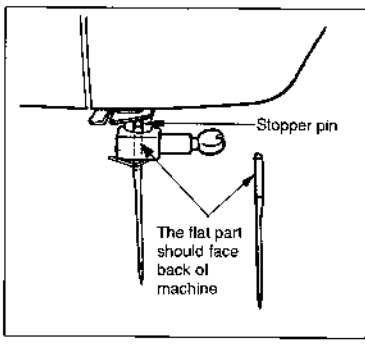

Hold needle with its flat part facing towards back of machine, and insert it fully until it touches stopper pin.

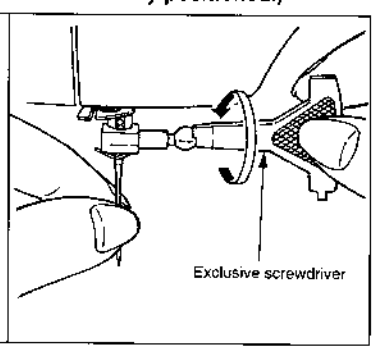

Securely tighten needle clamp screw, using exclusive screwdriver.

Straight stitch

When power is turned on, full left position straight stitch is automatically selected. To move needle position see page 15 or 23.

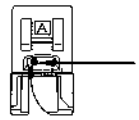

1 Select straight stitch pattern.

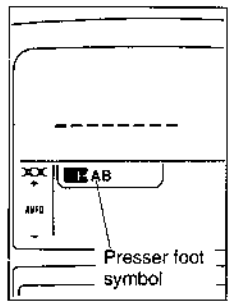

2 Use correct presser foot.

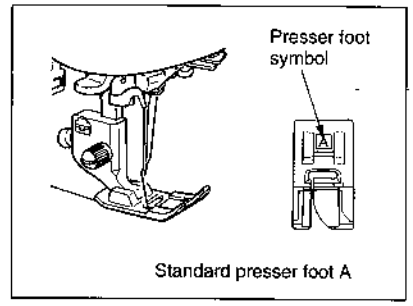

Use presser foot bearing symbol indicated on LCD.

* See page 8 for how to attach presser foot.

3 Position material, and lower presser foot.

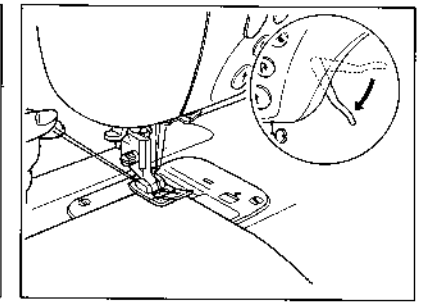

Place edge of material under presser foot.

Pull upper and bobbin threads to rear of machine and lower presser foot.

4 Begin sewing.

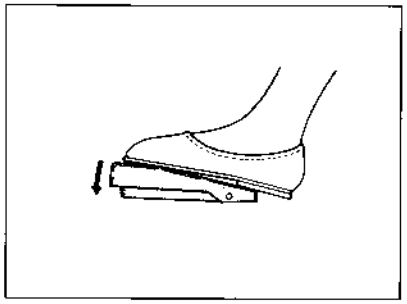

5 Lightly hold material.

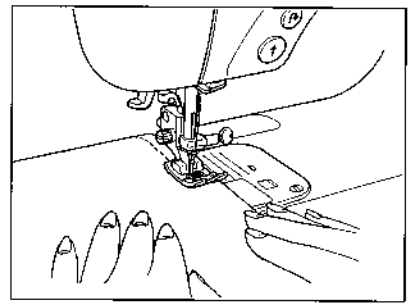

Be careful not to apply excessive pulling force to material while sewing.

6 Adjust sewing speed.

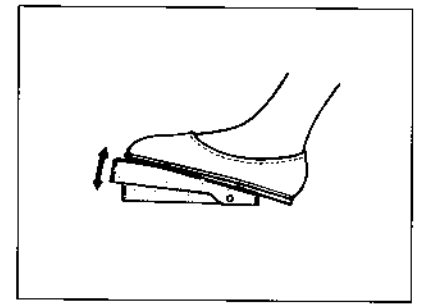

7 Stop sewing.

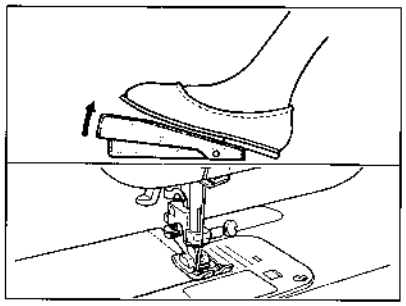

8 Cut thread. (For automatic thread cutter see page 14.)

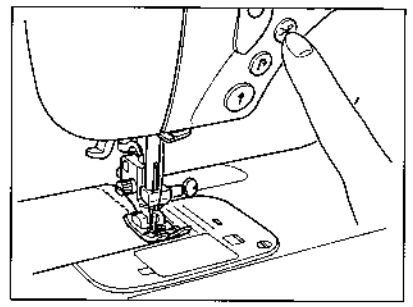

9 Lift presser foot and remove material.

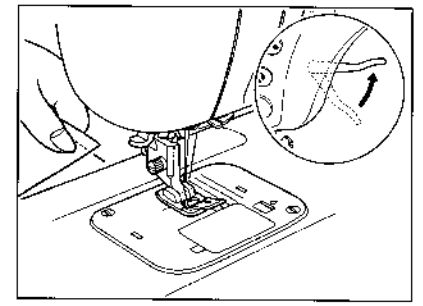

Back tack

Back tack is used at the beginning and end of seam to secure it.

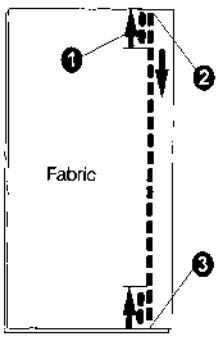

❶ Press back tack button for 3 needle penetrations to lock off seam.

❷ Begin sewing.

❸ Press back tack button again for 3 needle penetrations to lock off other end of seam.

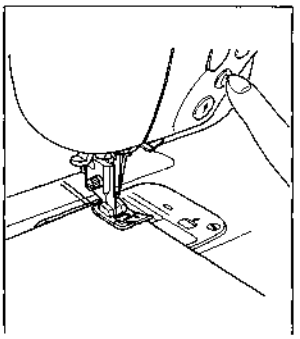

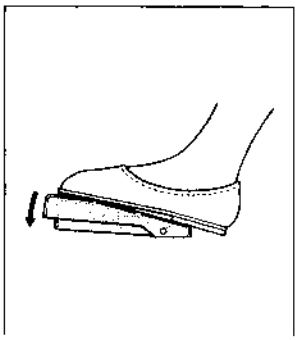

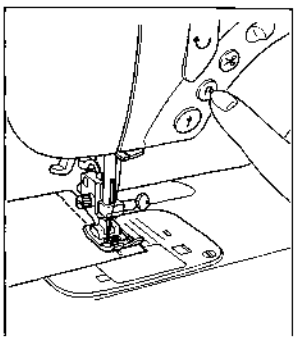

- The back tack button is only designed to be used for 3 needle penetrations at the ends of a seam.
- If you want to sew continuous reverse stitching, consult page 31 (Four Direction Sewing) and use the continuous reverse stitch there.
- The sewing machine will back tack only while the button is being pushed and stops when the button is released.
- The sewing machine runs at a slow speed when back tacking.

Changing sewing direction/pivoting

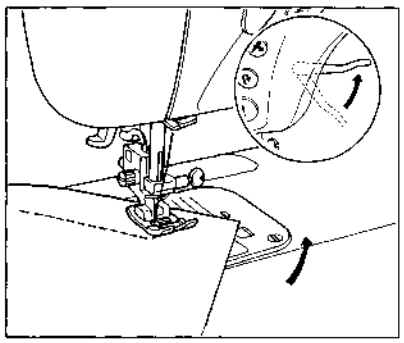

Stop machine in desired position. Lower needle into fabric. Lift presser foot, and turn material in desired sewing direction.

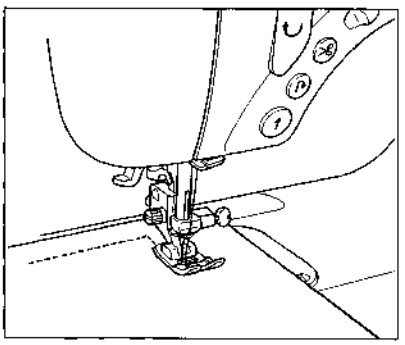

Lower presser foot and start sewing.

Seam guides

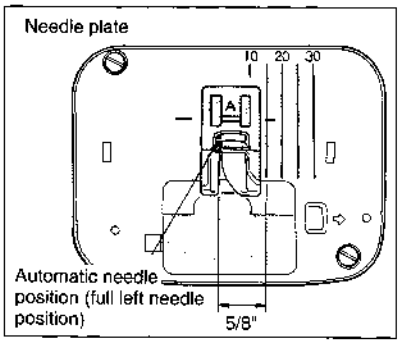

How to select needle positions

When power is turned on, full left straight stitch is automatically selected.
Press needle position buttons to select from among 22 possible needle positions.

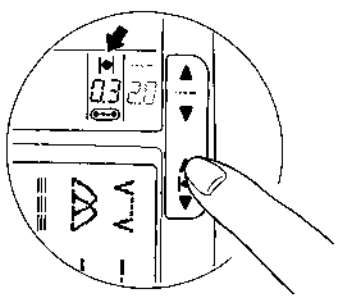

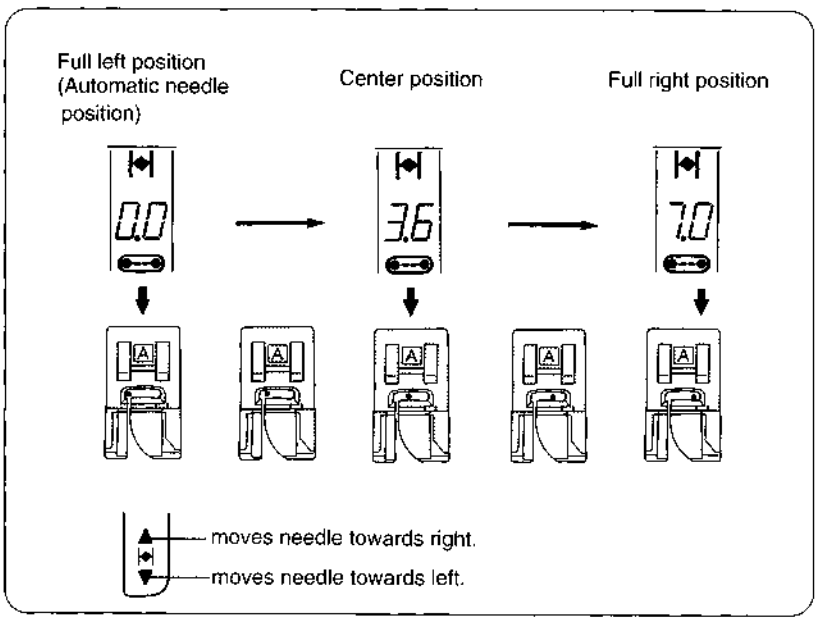

Zigzag Stitch

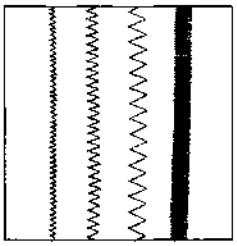

1 Select zigzag stitch pattern.

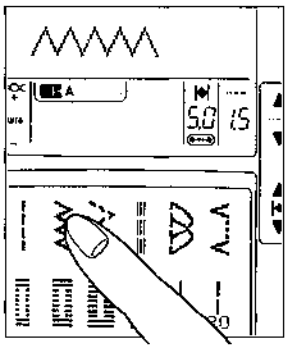

2 Use correct presser foot.

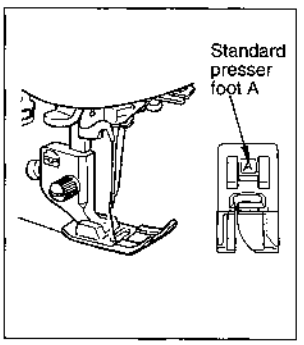

Use presser foot bearing symbol indicated on LCD.

3

The sewing method is the same as for straight stitch steps 3 through 9. (see page 22)

4

NOTE: Automatic stitch width and stitch length

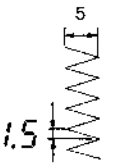

How to adjust stitch width.

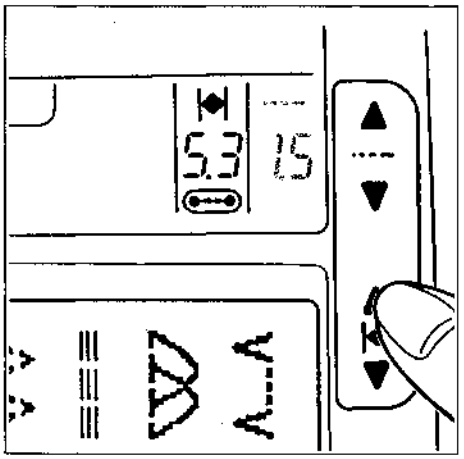

After selecting zigzag stitch pattern, if desired, adjust stitch width by pressing stitch width buttons.
Select from among 22 different stitch width possibilities.

NOTE: Stitch width can only be adjusted when sewing machine is stopped.

Manually Adjusted Stitch Width vs. Stitch Length

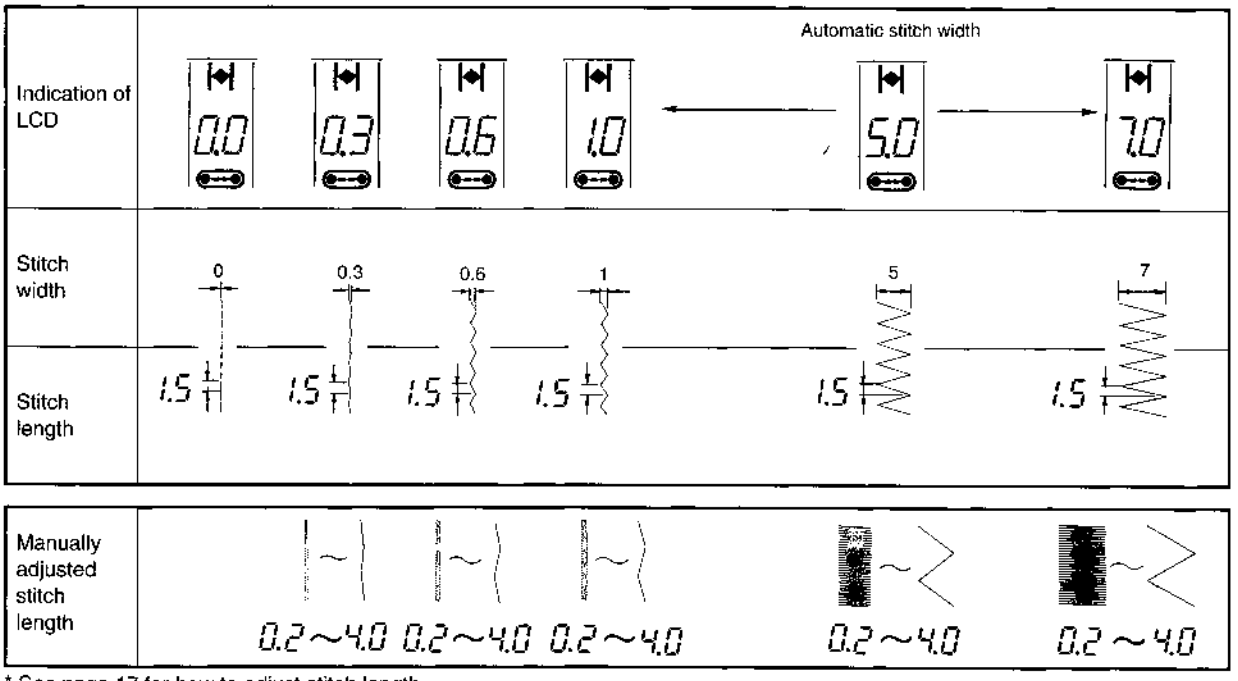

* See page 17 for how to adjust stitch length.

Overcasting (Overedging)

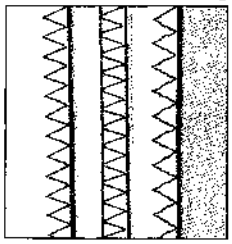

Used to prevent fabric from fraying.

1 Select desired stitch pattern.

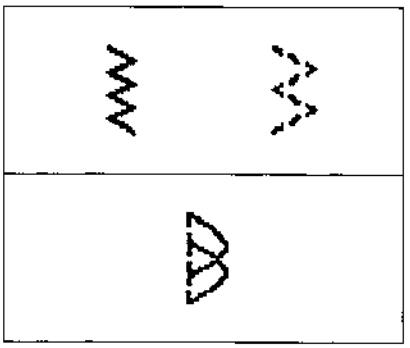

There are three stitch types that can be used for overcasting.
Select the one that is best suited for material.

2 Use correct presser foot.

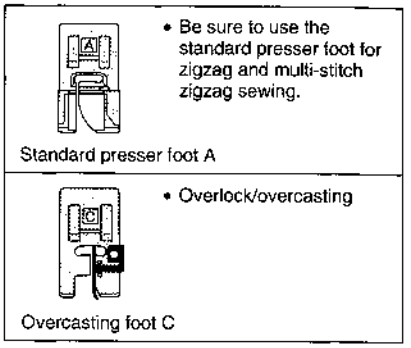

Use presser foot which is indicated on LCD.

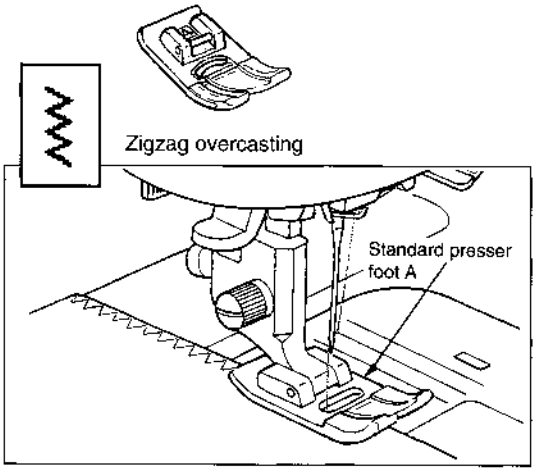

Used for overcasting light-weight material with curly edges.

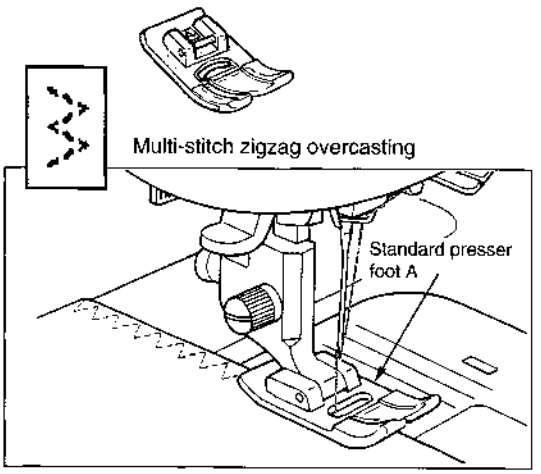

Used for stretchy material or fabrics which tend to fray.

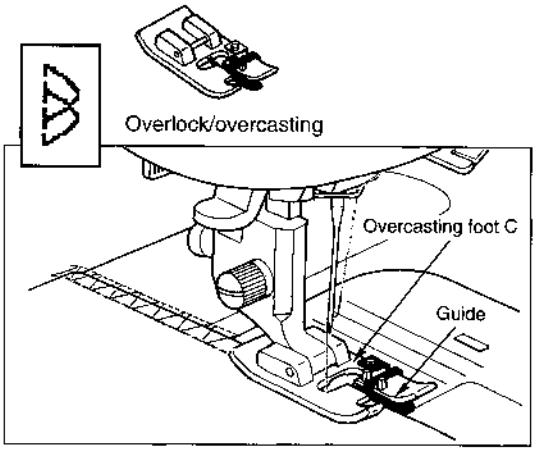

Used for overcasting edge of fabric to prevent fraying. This stitch may also be used to sew a seam that will not be pressed open.

Automatic Buttonholes

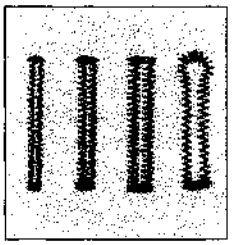

- When sewing knit or other stretchy materials, apply interfacing to the material, and set presser foot pressure adjustment lever to "LOW".
- Be sure to sew a test buttonhole first.
- Automatic stitch length (density) is 0.5 for bartack buttonholes and 0.6 for keyhole buttonhole. Adjust buttonhole density by adjusting stitch length (see page 17).
- Automatic buttonhole foot has an underplate for sewing perfect buttonholes along edge of garments where fabric layers are not equal. Underplate may be removed for special applications such as a double-breasted coat.

For sewing small buttonholes on light weight fabric

For sewing small buttonholes on light to medium weight fabric

For sewing large buttonholes on medium to heavy weight fabric

For sewing large buttonholes in thick or heavy weight fabrics

1 Select desired style and size buttonhole.

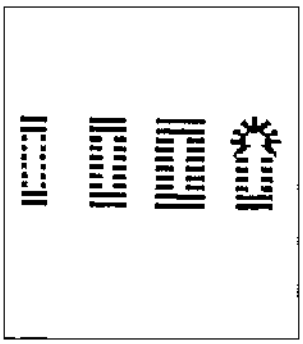

2 Change foot.

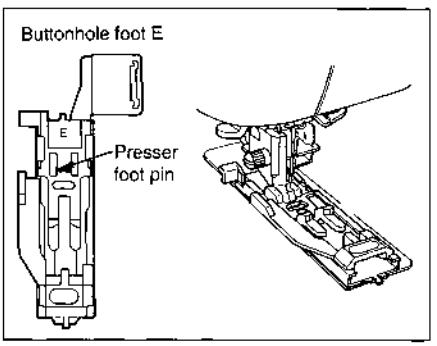

Attach buttonhole foot as illustrated.

3 Position Needle and Bobbin threads.

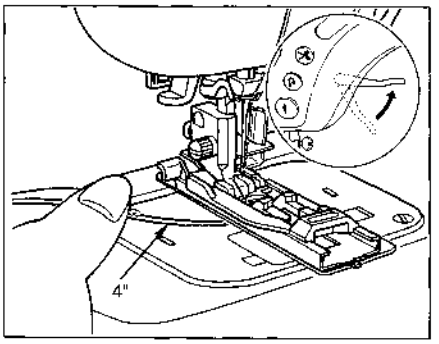

Raise presser foot lifter. Draw needle and bobbin thread between buttonhole foot and underplate.

4 Place button in buttonhole foot.

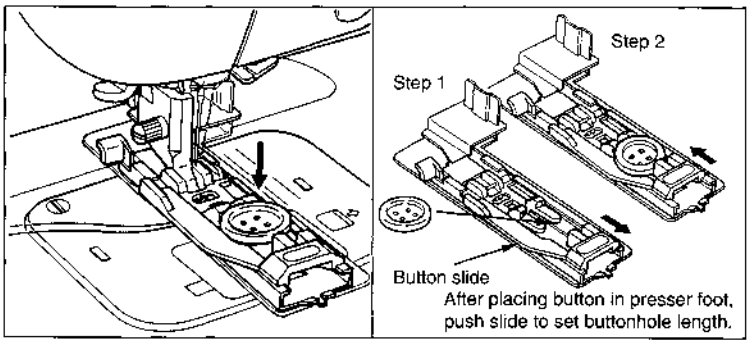

5 Remove button.

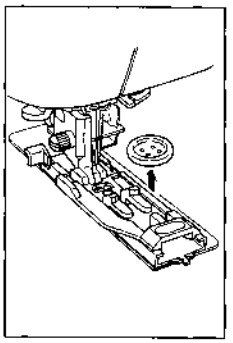

6 Mark Buttonhole Positions.

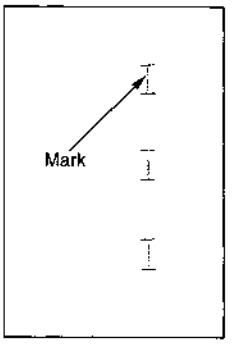

Note: When sewing buttonholes be sure to support the weight of the garment

Automatic buttonhole steps

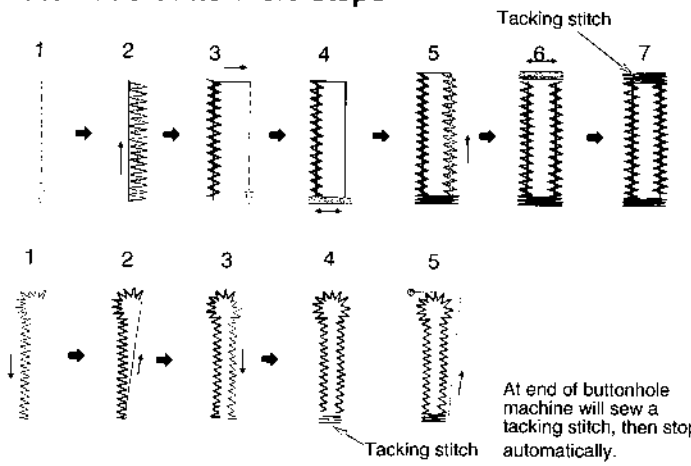

At end of buttonhole machine will sew a tacking stitch, then stop automatically.

Purl Stitch Buttonholes

The bartack buttonholes and the keyhole buttonhole can be used for purl stitch effect. Select desired buttonhole and press 2-color key .

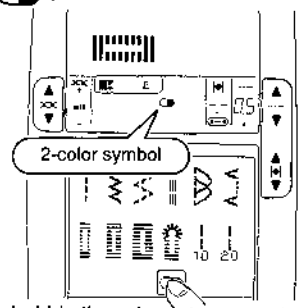

- The bobbin thread creates a crest on top of fabric.
- Finished appearance resembles a hand sewn buttonhole.

7 Position material.

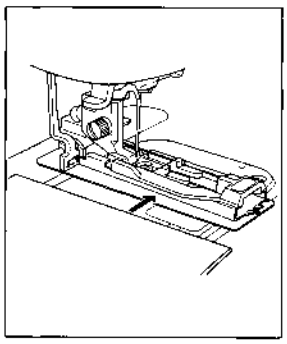

Place material between foot and underplate.

8 Lower buttonhole foot.

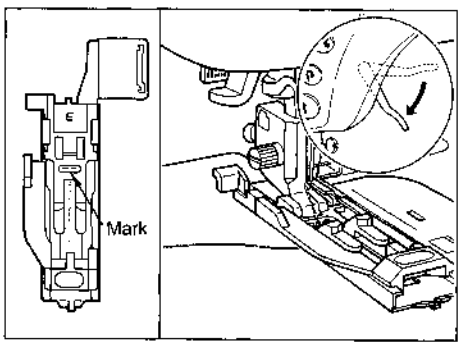

Lower buttonhole foot so that mark is at center of needle hole in foot.

9 Lower buttonhole lever.

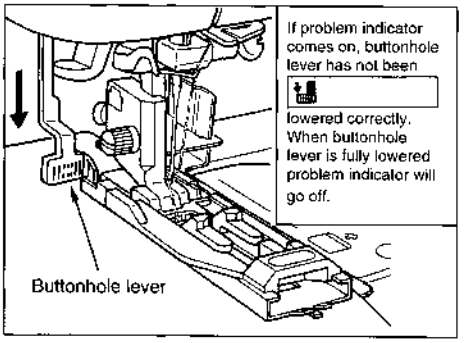

* Attempting to sew without lowering the buttonhole lever, will cause problem indicator to flash on and off, and machine will not start.

* If buttonhole length is set wrong, or needle or bobbin thread runs out, restart buttonhole from beginning by pressing buttonhole stitch pattern selection button once.

10 Begin sewing.

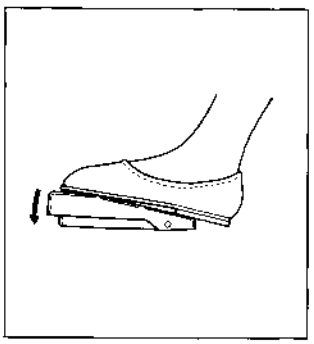

11 Press thread cutter button.

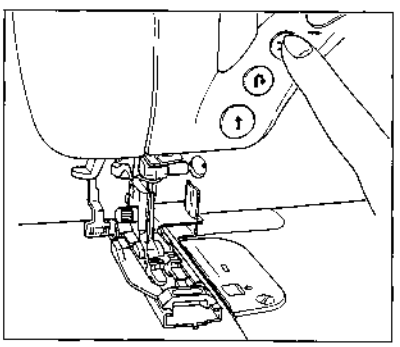

When buttonhole is complete cut threads.

12 Open completed buttonhole, using seam ripper.

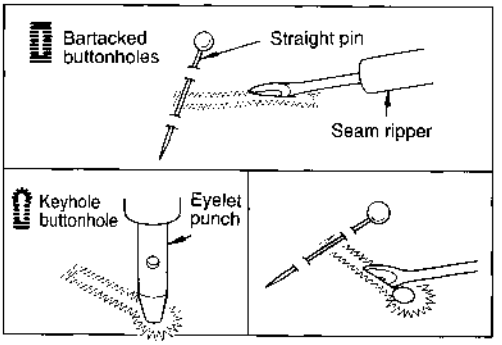

Cut middle of buttonhole open using seam ripper, being careful not to cut threads.
It is advisable to place a straight pin at end of buttonhole to help prevent overcutting.
Use eyelet punch to cut out round portion of keyhole buttonhole. It is advisable to place fabric on old piece of wood.

Sewing Corded Buttonholes

Sewing a cord into buttonholes will prevent them from becoming loose and they will last longer. Buttonhole twist thread may be used for cording.

How to set the cord

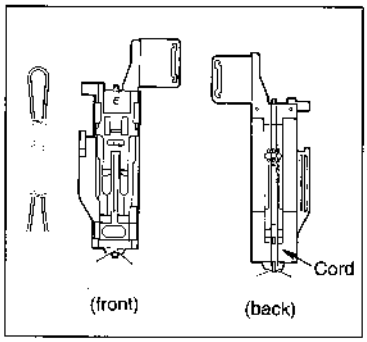

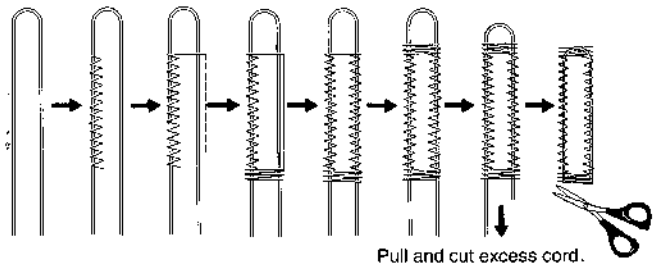

To sew buttonholes with cording, pass cord around end of buttonhole foot and knot ends of threads at front. Then, attach buttonhole foot to presser bar and sew buttonhole. Pull cording tight into sewn buttonhole and cut off excess cord.

Basting Stitch

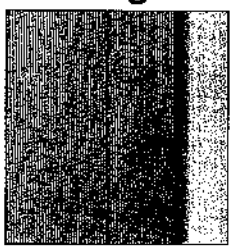

Basting stitch seam can be easily removed.

1 Select desired length basting stitch.

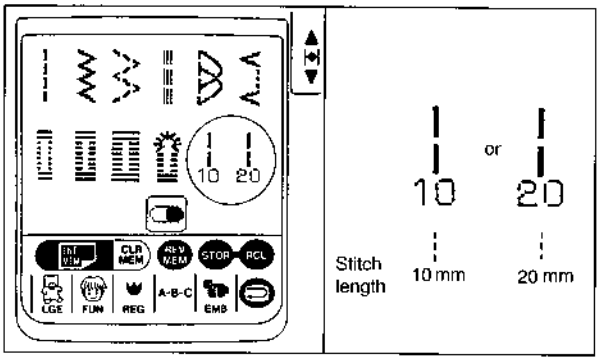

2 Use correct presser foot.

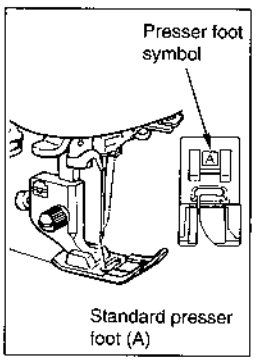

Blindstitch

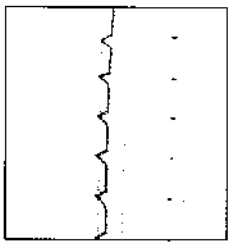

Blind stitching provides a durable way to finish a hem. It takes practice, however, so a test sample is suggested.

1 Select blindhem stitch pattern.

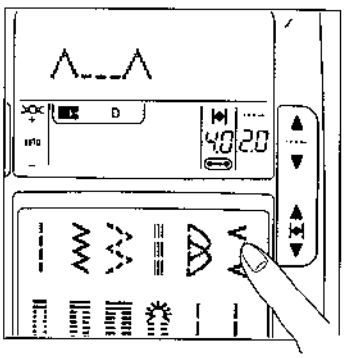

2 Use correct presser foot.

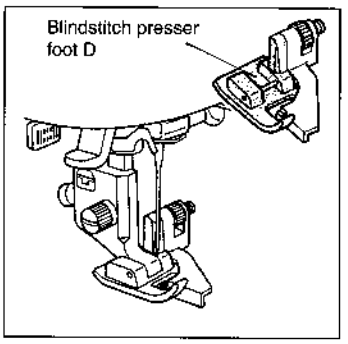

Use presser foot which has symbol indicated on LCD.

For blindstitching general fabrics or heavy-weight materials

1 Overcast material, and fold edge.

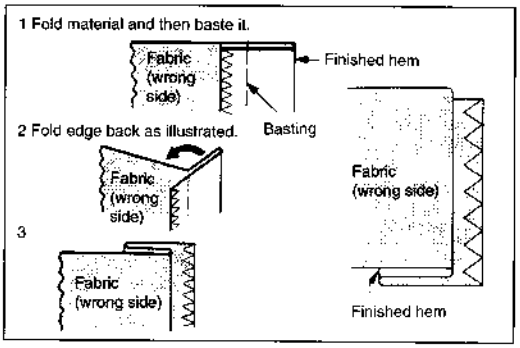

2 Position folded edge against guide and sew.

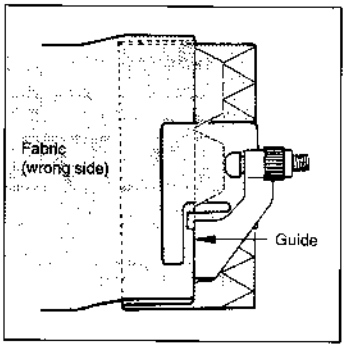

3 Turn fabric over.

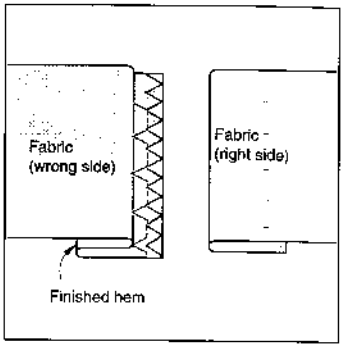

* Refer to page 25 for overcasting.
* Refer to page 28 for basting stitch.

For blindstitching light-weight fabrics

1 Fold the fabrics.

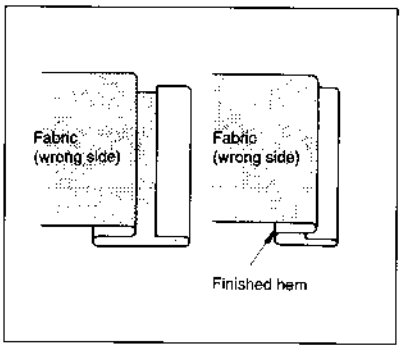

2 Position folded edge against guide and sew.

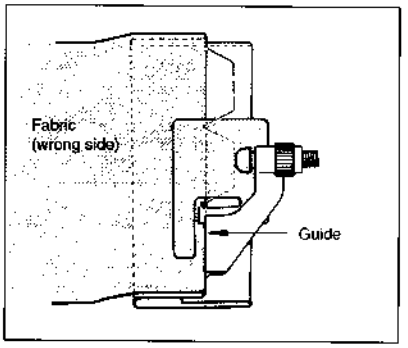

3 Turn fabric over.

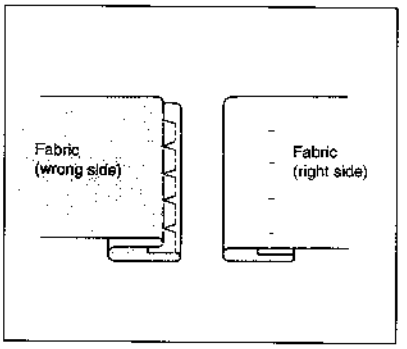

How to adjust guide of blindstitching presser foot

- **If stitches fail to reach folded edge:**

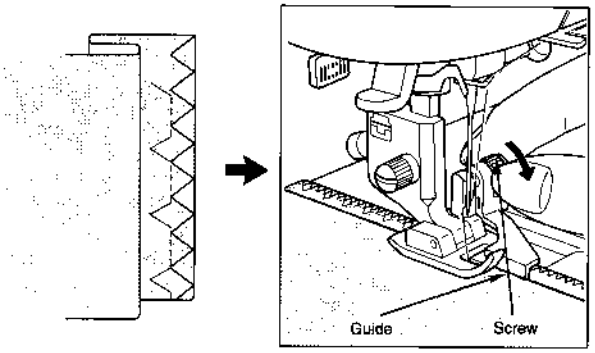

Turn screw counter clockwise.
This will move guide to right.
Place folded edge snugly
against repositioned guide.

- **If stitches cover folded edge too much:**

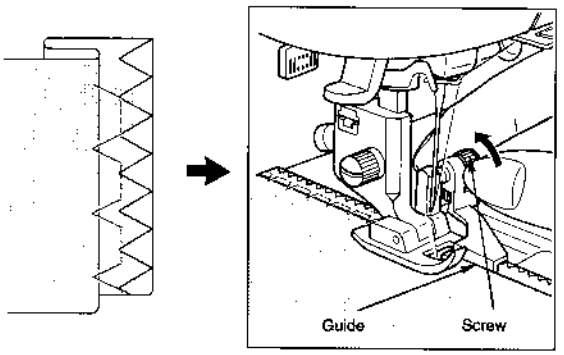

Turn screw clockwise.
This will move guide to left.
Place folded edge snugly
against repositioned guide.

* You also may adjust stitch width to achieve a perfect blindstitch.

Attaching Buttons

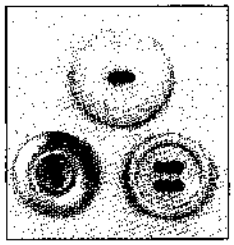

The Zigzag stitch is used to attach both 2 and 4-hole buttons. The button-sewing foot must be attached when sewing a button.

1 **Use correct presser foot.**

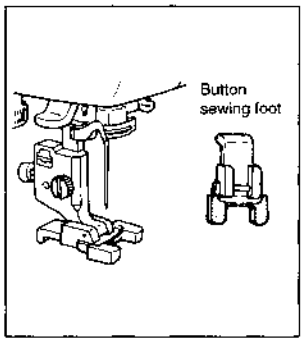

Attach button-sewing foot supplied in accessory bag.

2 **Lower feed dogs.**

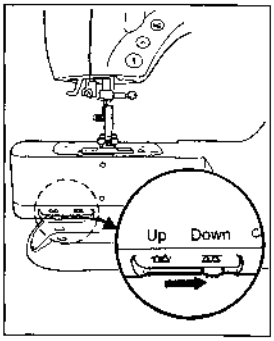

3 **Select zigzag stitch pattern.**

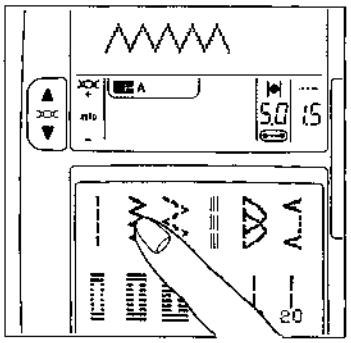

4 **Measure distance between holes in button to be sewn.**

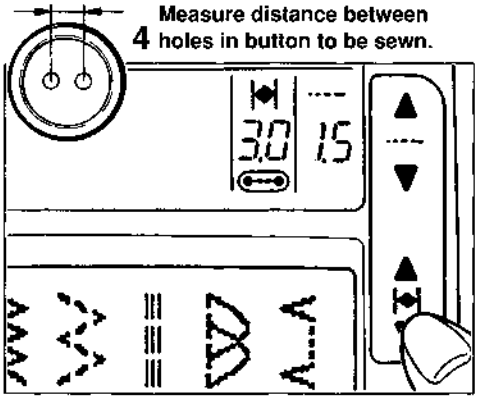

Press stitch width buttons to match holes in button to be sewn.
NOTE: 3.0 mm width will generally sew all size buttons.

5 **Place fabric on machine, and place button under button sewing foot.**

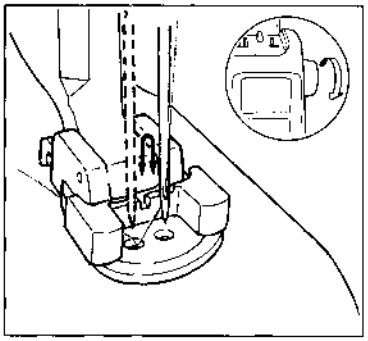

Turn handwheel by hand to confirm that needle exactly enters holes in button.

6 **Tack thread in place.**

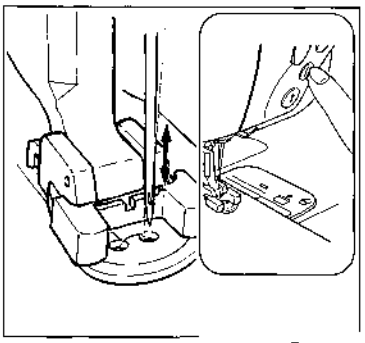

Press back tack button to sew 5 tacking stitches to secure.

7 **Slowly press on speed controller allowing needle to sew 8 to 10 stitches.**

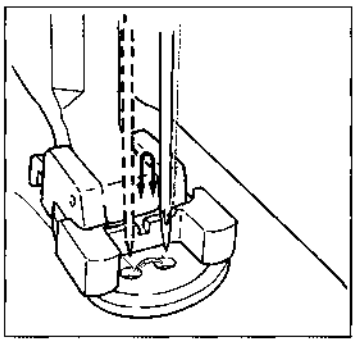

8 **Press reverse stitch button to sew 5 or 6 tacking stitches.**

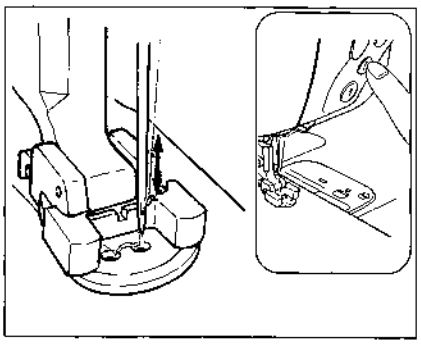

9 **Press thread cutting button, trim thread.**

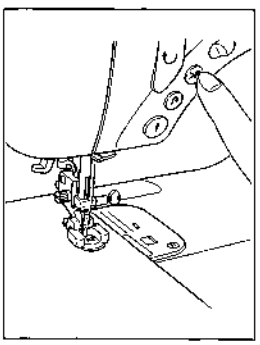

Caution: Due to irregular shape of some buttons button foot may not clamp securely. Do not attempt to sew these or buttons with a shank using sewing machine.

Four Direction Sewing

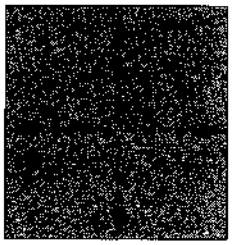

These four stitches allow sewing sideways (Zigzag/Straight stitch) and forward or backward, without pivoting the fabric.

1 Press LGE motif button .

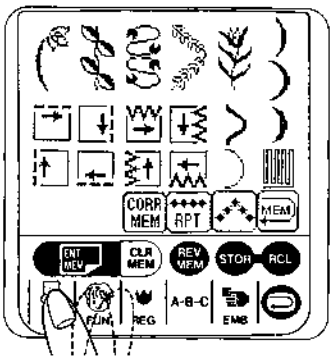

2 Select desired pattern.

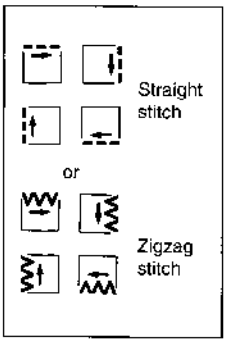

3 Use correct presser foot.

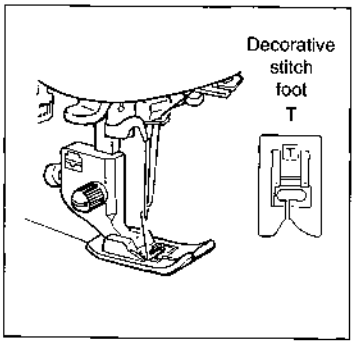

Follow steps ❶ through ❹

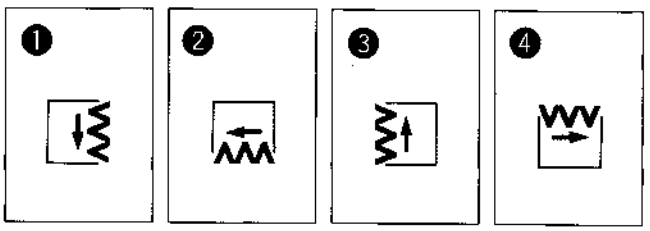

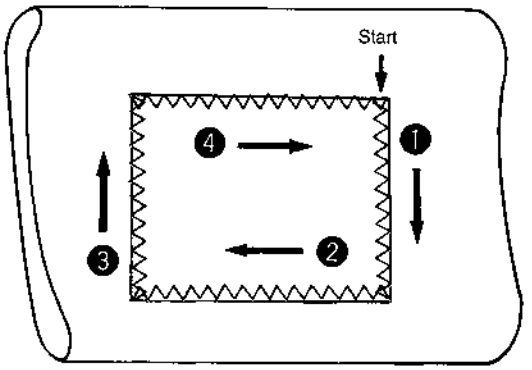

Balancing Shape Of Pattern

It is recommended that a test sample of pattern be sewn using same fabric and interfacing or backing before sewing on garment. Depending on type of material, its finish, thickness and interfacing used, shape of pattern may be altered. If pattern is out of shape sew trial sewing pattern to balance machine.

1 Press pattern category button.

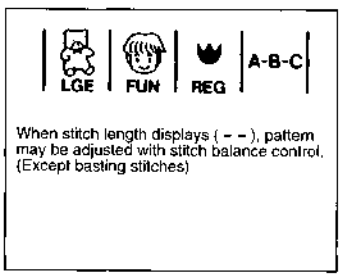

2 Press trial sewing pattern .

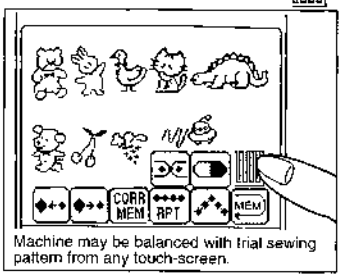

3 Begin sewing.

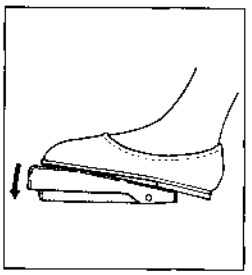

4 Completion

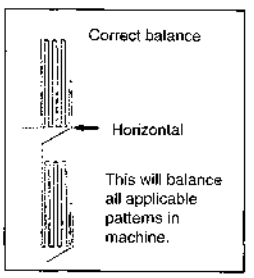

NOTE: Trial sewing pattern may also be used for darning.

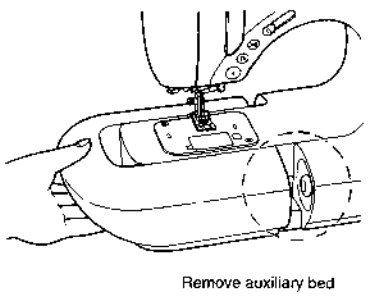

Remove auxiliary bed

4-1 How to adjust right side up stitching

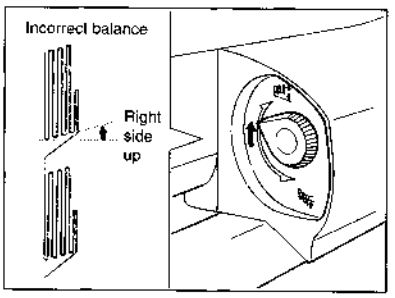

Turn stitch balance control up.

4-2 How to adjust right side down stitching

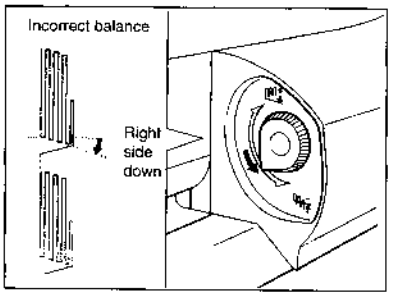

Turn stitch balance control down.

Pattern Sewing

How to select patterns.

1.

Press desired pattern category button. Lower LCD Touch-screen will illuminate to indicate selection.

2.
Touch desired pattern on lower LCD Touch-screen. Selected pattern will appear on upper LCD window.

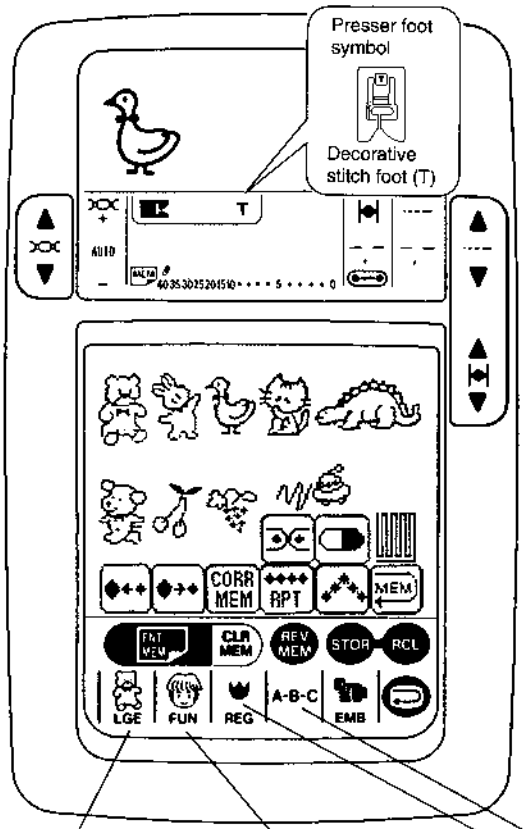

Pattern Modifier Keys

Names of each key	Enlarge size key
Pattern stitch (Example)	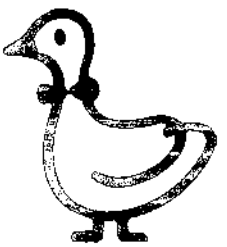
LCD graphics	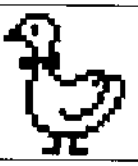

Names of each key	2-color or purl stitch buttonhole key
Pattern stitch (Example)	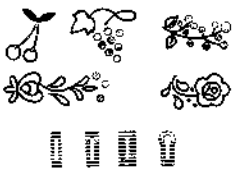
LCD graphics	Although this key may be selected at any time it will only operate in conjuction with a two color pattern or purl buttonhole.

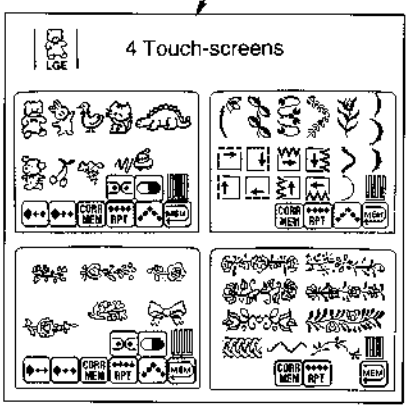

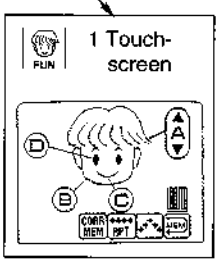

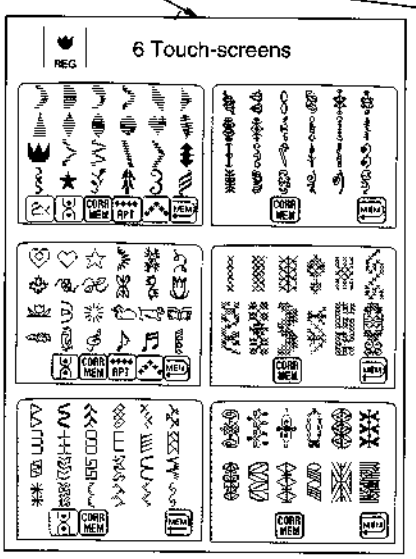

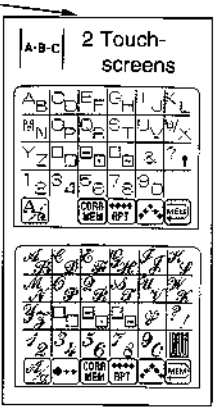

Reduce size key	Mirror (reversed image) key	Turn over key	Pattern elongate key
	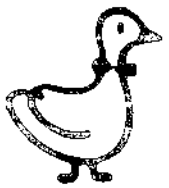	Category button Applicable 3 Touch-screens 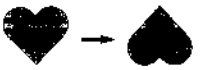	Category button Applicable 1 Touch-screen

Repeat pattern key	Pattern position key	Return key	Small alphabet key
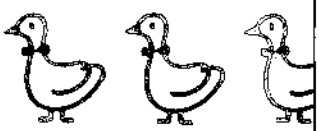	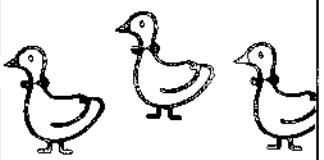		
Continuous pattern sewing	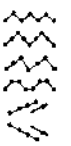 Each press of position key will indicate a different pattern layout.	Needle will return to sewing start point of memory patterns.	Frames upper or lower case. 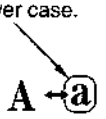

Correction key	Pattern memory button (to memorize pattern selected)	Pattern clear button (clears pattern that has been memorized.)	Review button Reviews patterns in memory one by one.
Corrects undesired pattern in middle of memory sequence.			
	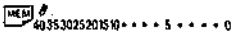 Indicates memory capacity remaining. **NOTE:** Indicator counts down by 5 until 10 patterns remain at which point it counts down one by one.	Store button Stores patterns in memory even when power is OFF.	Recall button Recalls stored memory.

Large Size Pattern Sewing

It is recommended to make a sample using same fabric and interfacing or backing material before sewing on garment.
Note: Virtually all fabrics require interfacing to sew large size patterns properly.

When sewing pattern stitches or alphabet stitches, be sure to use decorative stitch foot (T).

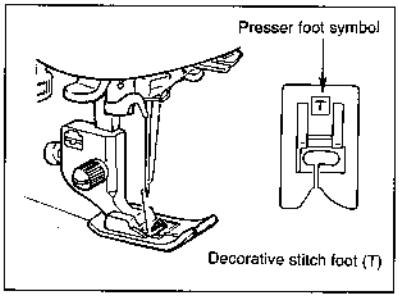

To determine pattern placement use assistant marker and templates provided with machine.

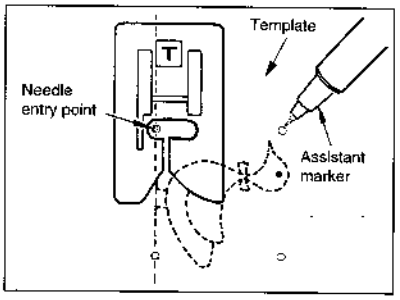

It is vital fabric is kept square to machine to assure proper pattern formation.

Position fabric under decorative stitch foot (T) where needle will begin sewing pattern.

Patterns are stitched sideways, this allows for easier sewing with free-arm.

Note: See template for additional instructions.

How to select patterns of lower LCD touch-screens.

Press large motif category button...

1. First press...

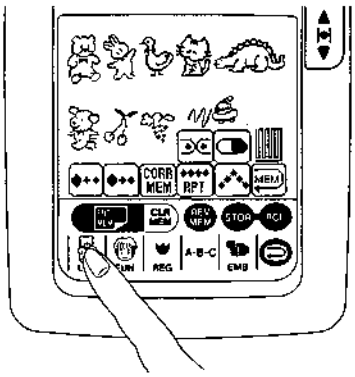

2. Second press...

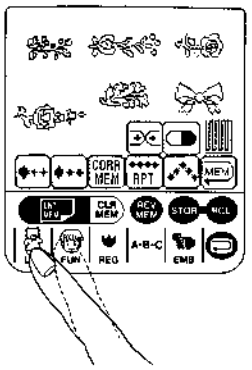

3. Third press...

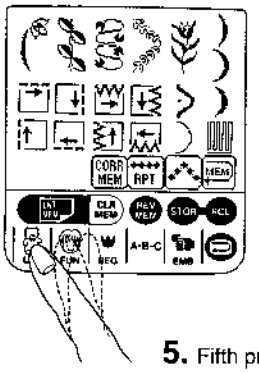

4. Fourth press...

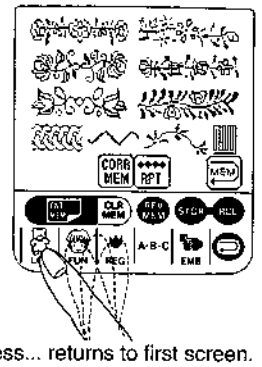

5. Fifth press... returns to first screen.

How to select a pattern.

Touch desired pattern on lower LCD Touch-screen. Pattern will appear on upper LCD window.

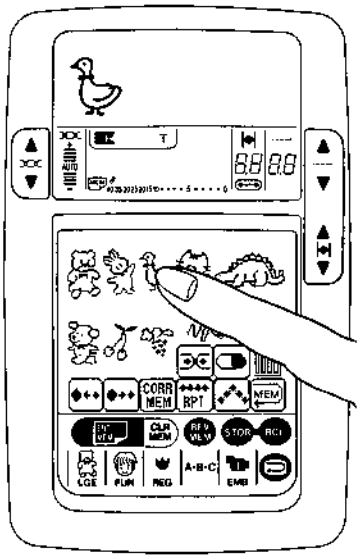

1. Single pattern

Begin sewing.

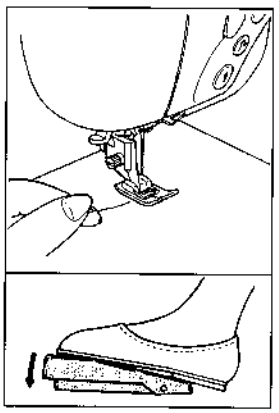

When one pattern is complete machine will stop automatically.

For example

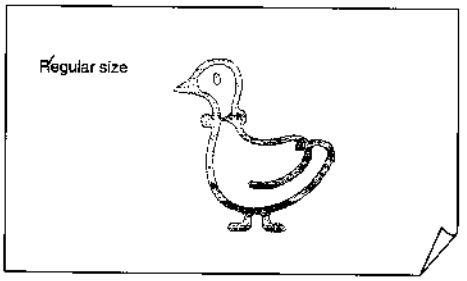

2. Enlarge pattern.

1. Select pattern.
2. Press enlarge size key .
3. Begin sewing.

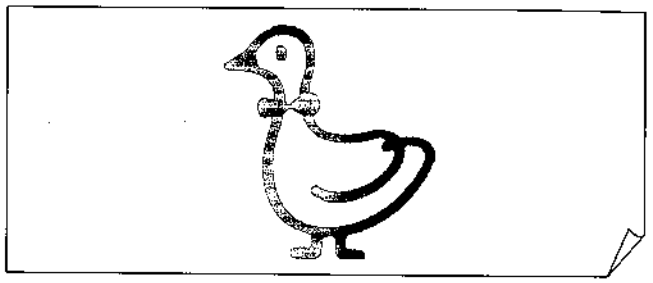

3. Reduce pattern.

1. Select pattern.
2. Press reduce size key .
3. Begin sewing.

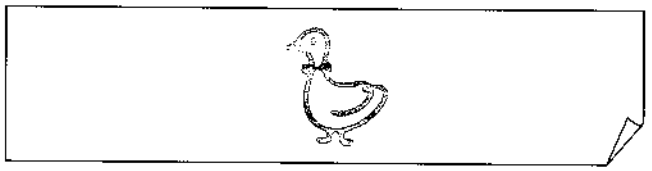

4. Mirror pattern

1. Select pattern.
2. Press mirror key .
3. Begin sewing.

* Pattern can also be enlarged or reduced.

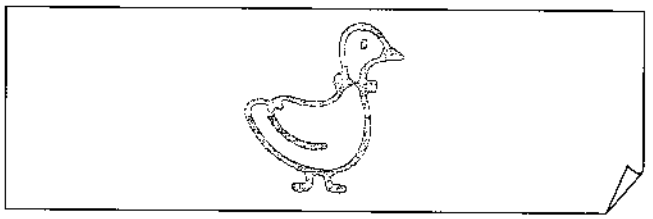

5. 2-color pattern

These illustrated patterns can be sewn in two colors. This unique technique is achieved by placing a different color thread in bobbin than needle thread. Bobbin thread color is sewn on right side of fabric, thereby sewing pattern in two different colors.
On machine as shown on inside of top cover grey area of pattern will be sewn with bobbin thread.

* Press 2-color pattern key .

6. Position pattern

In position pattern mode, machine is capable of changing position of each pattern.

1. Select pattern.
2. Press position key .
   Continue to press position key to select from among 6 different positions as shown on upper LCD window.
3. Begin sewing.
4. Machine will continue to sew pattern until machine is stopped.

NOTE: This is a repeat function and cannot be entered into memory.

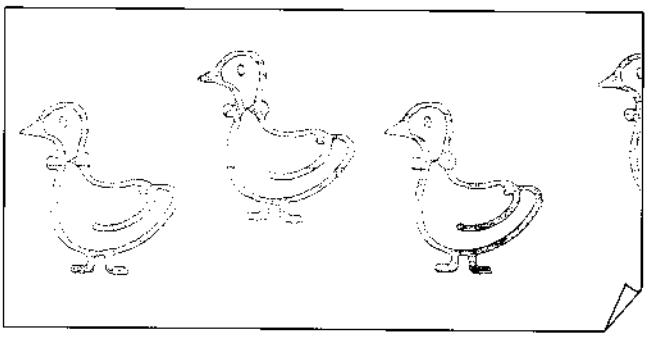

7. Repeat pattern.

1. Select pattern.
2. Press repeat key .
3. Begin sewing.
4. Machine will continue to sew the pattern until machine is stopped.
   NOTE: To finish sewing to the end of pattern, press repeat key again.
   Machine will stop sewing at end of pattern.

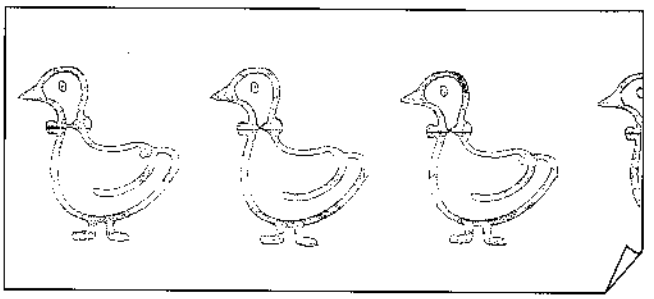

Fun-face Pattern Sewing

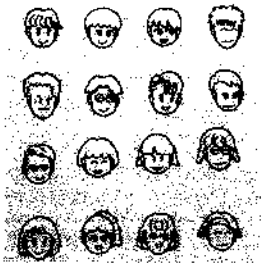

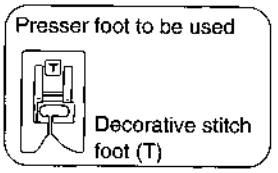

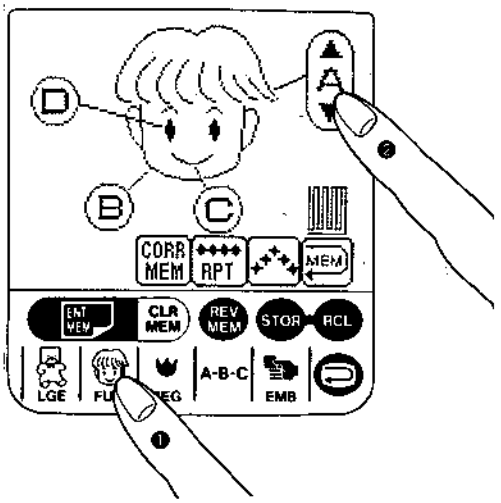

1. Press the FUN button .

2. Press , Ⓑ, Ⓒ and Ⓓ key.

To change features from among 1920 possible faces. Face changes appear on upper LCD window.

Names of each key	Kinds
Hair key	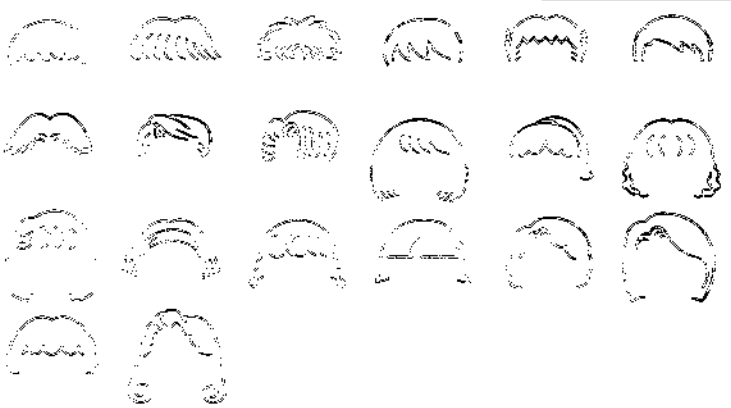
Chin key	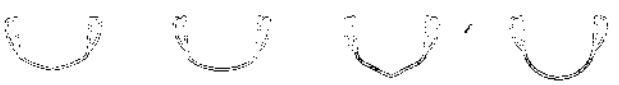
Mouth key	
Eye key	

Regular Pattern Sewing

1. Press regular pattern button | REG |.
2. Each time | REG | button is pressed, lower LCD touch-screen will change.

Presser foot to be used

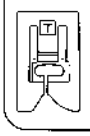

Decorative stitch foot (T)

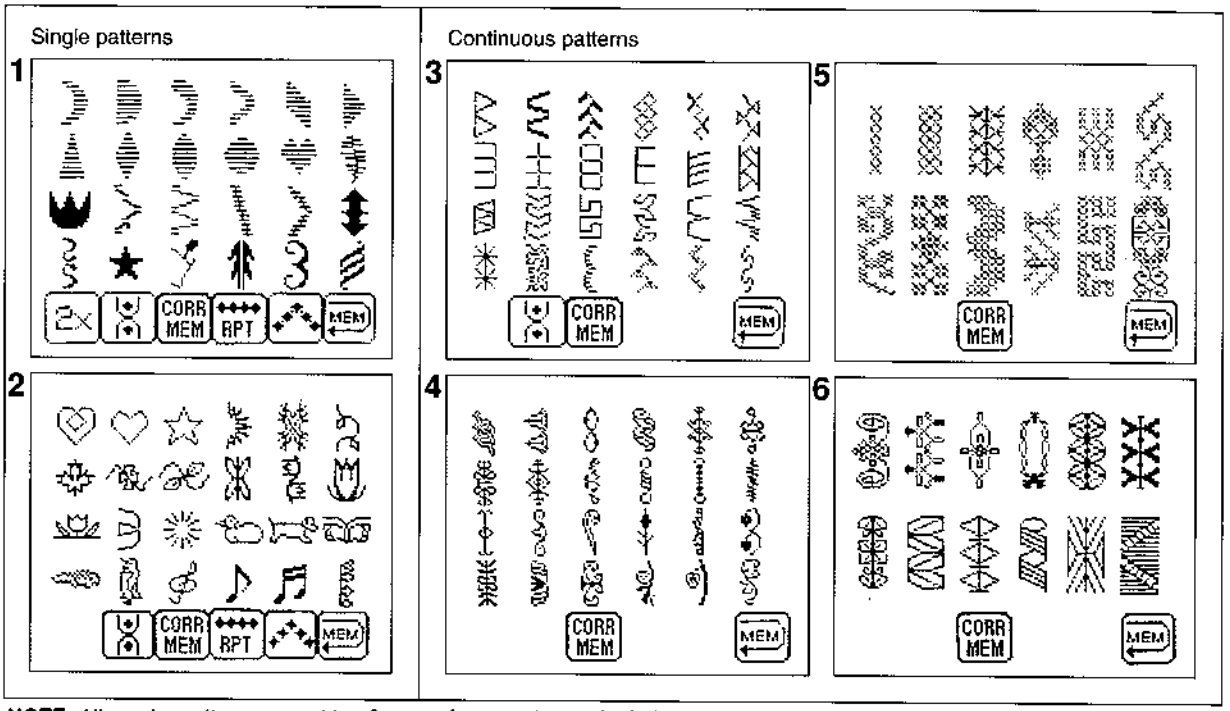

NOTE: All regular patterns except top 3 rows of screen 1 must be balanced for perfect appearance. (see page 31). Use the trial pattern from any of the 4 large touch-screens or from the fun-face touch-screen to balance pattern to fabric being used. Backing fabric will enhance appearance of stitch patterns.

How to use pattern modifier keys of regular patterns.

1. Press regular pattern button | REG |.
2. Press desired pattern.

For example: Touch-screen 1

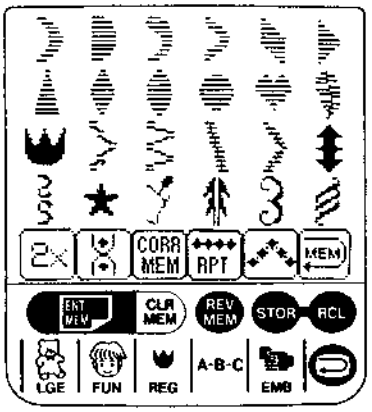

3. Begin sewing.

Automatic Pattern

Name and function of modifier key		Result
2x	Pattern elongater key	
	Turn over key	
RPT	Repeat pattern key	
	Pattern position key	

How to adjust width and length of regular patterns.

- The width on patterns of first 3 touch-screens may be adjusted from automatic width of 7mm to widths of 4 and 5mm (see page 18 for How to adjust stitch width).
- The length of the first 3 rows of patterns on touch-screen 1 may be adjusted for desired density (see page 17 for How to adjust stitch length).

Alphabet Stitch Sewing

1. Press alphabet button [A-B-C].

First press

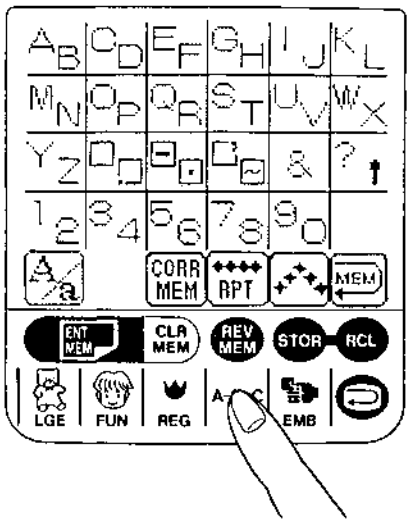

Second press

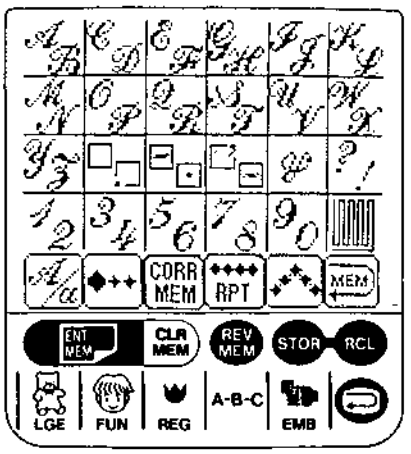

Presser foot to be used

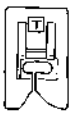

Decorative stitch foot (T)

Space key

Period key

Hyphen key

Center point key

Apostrophe key

How to select letter of alphabet.

- Pressing [key] key once will select A.

  Pressing key again will select B.

How to change size and upper/lower case of alphabet.

First time [◆++] key is pressed:	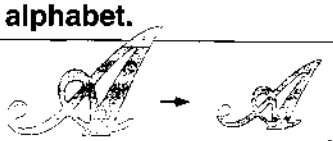
Second time [◆++] key is pressed:	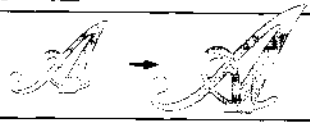
First time [A/a] or [A/a] key is pressed:	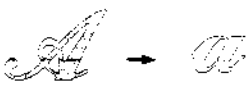
Second time [A/a] or [A/a] key is pressed:	

How to place letters or patterns into memory

- Press [ENT MEM] button and last selected letter or pattern shown on upper LCD window will be placed in memory. Press [ENT MEM] button for every letter and pattern to be placed in memory.
- Press [CLR MEM] button to delete a wrong letter or pattern in memory.
- Press [REV MEM] button to review patterns in memory one by one.
- Use memory capacity indicator ([MEM] 40 35 30 25 20 15 10) to determine how much space is still available in memory.
- Press [STOR] button to store letters or patterns in memory even when power to machine is turned off.
- To recall stored letters and patterns from memory press LGE, FUN, REG or A-B-C category button and then [RCL] button. After selecting [STOR], wait for beep and for sequence stored to again show on LCD screen. This will assure storage.

* If new patterns are stored in memory, patterns which were stored in memory before will be erased.

* To store in memory additional patterns with patterns already in stored memory, first recall existing pattern to upper LCD window, add additional patterns to memory sequence, then store new pattern sequence in memory.

How to Combine Patterns. (Example)

Combine upper case and lower case.

Up to 40 patterns may be entered into memory.

1. Press alphabet button [A-B-C] twice.
2. Press [S] . (Indicates S on upper LCD window.)
3. Press [MEMO] button.
4. Press [I] . (Indicates SI)
5. Press [A] key. (Indicates Si)
6. Press [MEMO] button.
7. Press [N] twice. (Indicates Sin)
8. Press [MEMO] button.
9. Press [G] . (Indicates Sing)
10. Press [MEMO] button.
11. Press [E] . (Indicates Singe)
12. Press [MEMO] button.
13. Press [R] twice. (Indicates Singer)
14. Press [MEMO] button.
15. Begin sewing.

Combination Fun-Face and Alphabet

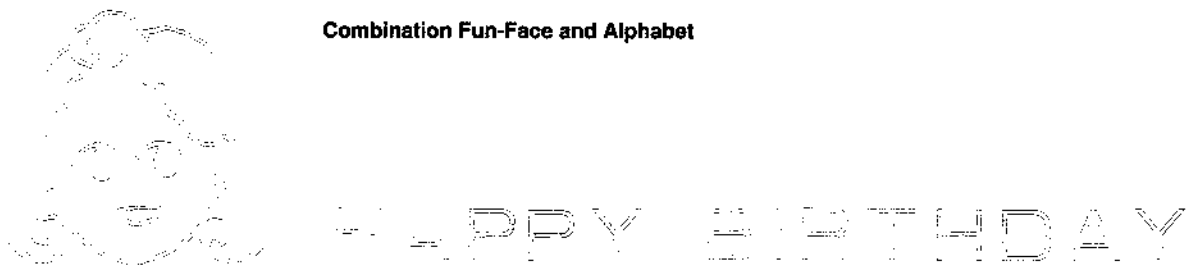

1. Press Fun-Face button [FUN].
2. Press desired [A] , Ⓑ , Ⓒ , Ⓓ key to make face.
3. Press [MEMO] button.
4. Press Alphabet button [A-B-C] .
5. Press [H] twice. (H)
6. Press [MEMO] button.
7. Press [A] . (A)
8. Press [MEMO] button.
9. Press [P] twice. (P)
10. Press [MEMO] button.
11. Press [P] twice. (P)
12. Press [MEMO] button.
13. Press [Y] . (Y)
14. Press [MEMO] button.
15. Press [ ] . (space key)
16. Press [MEMO] button.
17. Press [B] twice. (B)
18. Press [MEMO] button.
19. Press [I] . (I)
20. Press [MEMO] button.
21. Press [R] twice. (R)
22. Press [MEMO] button.
23. Press [T] twice. (T)
24. Press [MEMO] button.
25. Press [H] twice. (H)
26. Press [MEMO] button.
27. Press [D] twice. (D)
28. Press [MEMO] button.
29. Press [A] . (A)
30. Press [MEMO] button.
31. Press [Y] . (Y)
32. Press [MEMO] button.
33. Begin sewing.

Data which has been placed in memory can be cancelled with any of following three methods.

1. Press clear button to remove one pattern at a time or hold it down to cancel all memory.
2. Press Utility Pattern Button ● .
3. Turn off power to machine then turn it back on.

} All data in memory will be deleted at once. Does not apply to stored data.

How to Correct Patterns in Memory

When an undesired pattern has been placed in memory.

- CLR MEM button will operate only when button has been pressed.
- Pressing CLR MEM button will clear patterns which have been selected.
- Memory of undesired patterns will be cleared in order from pattern which was selected last.
- Continue to press CLR MEM button and all patterns which have been selected will be cleared one at a time.
- Turning power switch off, or selecting utility pattern button will clear all data in memory.
- To clear reduced size or mirror pattern press modifier key again.

Liquid crystal display window

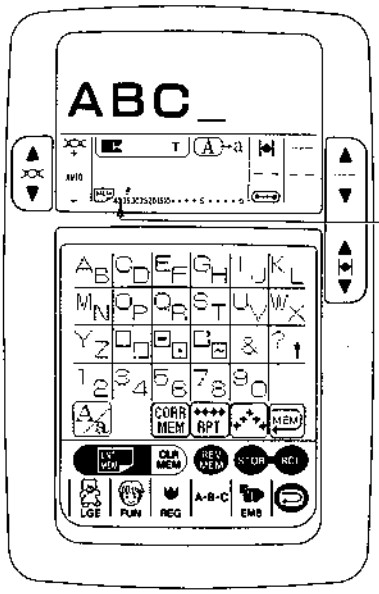

- When memory is not full, it will be indicated on LCD and patterns may continue to be added.
- Before selecting a new set of patterns, be sure to clear all memorized patterns. Memory Capacity Indicator ( ) will not show on LCD.
- 40 patterns can be stored in memory.

Memory Capacity Indicator Pointer indicates how much space is available in memory.

❶ When last selected pattern that has been placed in memory is not a desired one.

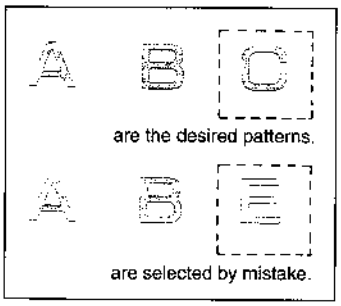

1. Press CLR MEM button once and last pattern will be deleted.
2. Select correct letter (C.)
3. Press button.

❷ When an undesired pattern is selected in middle.

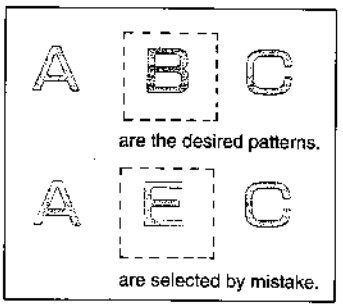

1. Press REV MEM button twice.
2. Press CORR MEM key and CLR MEM button.
3. Press CORR MEM key and select correct letter (B.)
4. Press button.
5. Press REV MEM button twice.

Indicated on upper LCD window

⇨ EC

⇨ C

⇨ BC

⇨ ABC_

How to Cut Cross-over Stitch.

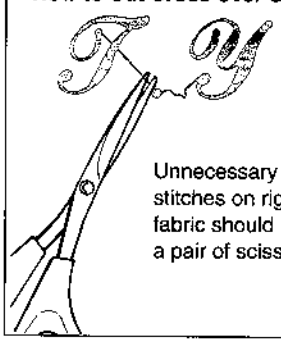

Unnecessary cross-over stitches on right side of fabric should be cut with a pair of scissors.

Free Arm Sewing

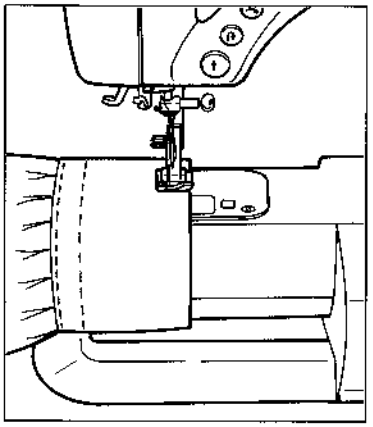

Sewing hard-to-reach garment areas is made easier by using free-arm sewing capability of sewing machine.

Note: See page 5 for converting machine to free-arm.

Application examples

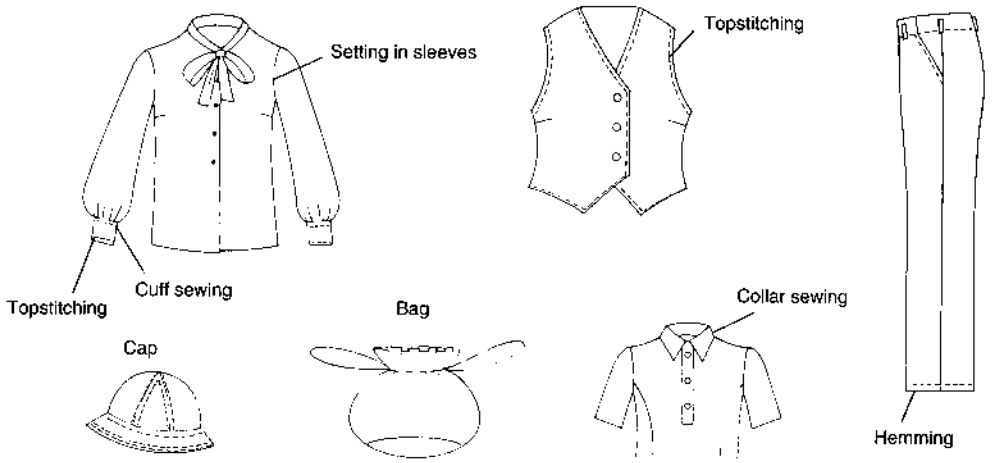

Circular Pattern Stitch

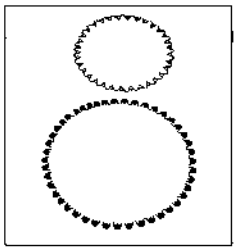

Use circular ruler for sewing outside periphery of coasters and emblems.
Circular ruler allows machine to sew circular patterns of 3 to 10 cm radius.

1 Select pattern as desired.

Select patterns from

REG Pattern category.

If single pattern is selected press RPT key.

2 Attach decorative stitch foot (T).

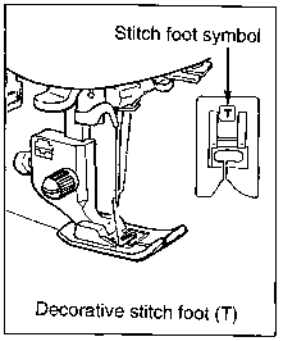

3 Attach circular pattern stitching ruler.

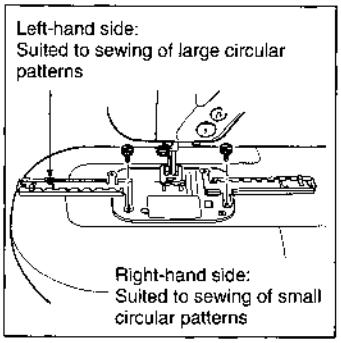

Attach circular pattern stitching ruler to left- or right-hand side of Needle plate using screw supplied with machine.

4 Move sizing lever by firmly pushing from slot.

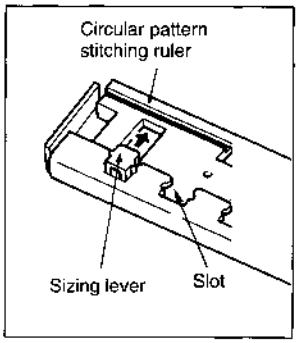

5 Move sizing plate to desired position.

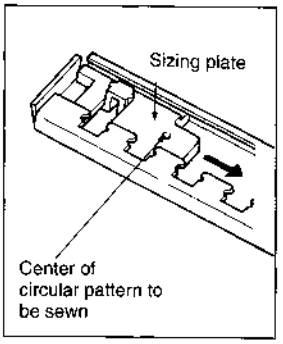

6 Push sizing lever into slot.

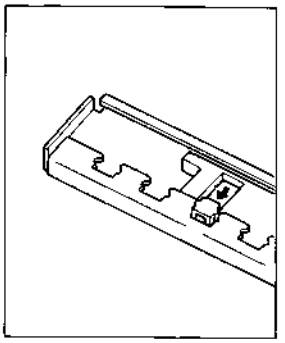

7 Place material on machine and hold in position using tack supplied with machine.

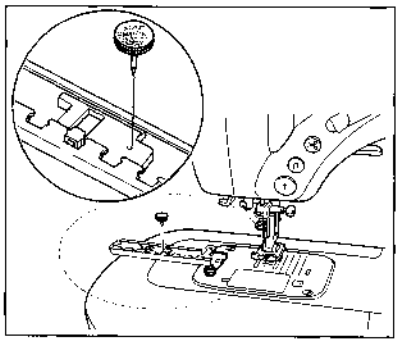

Heirloom Sewing (Using wing needle)

CAUTION: Make sure power/light switch is off before changing needle.

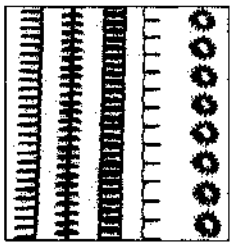

1 Insert wing needle.

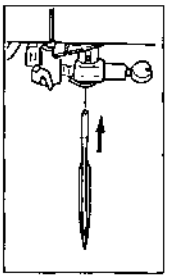

2 Use correct presser foot

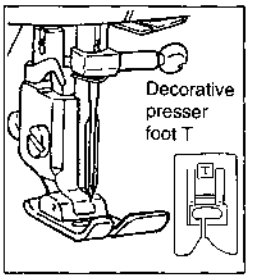

3 Automatic needle threader cannot be used.

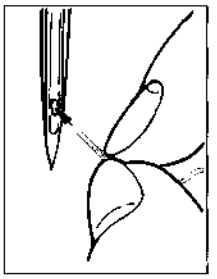

4 Select one of five patterns from category.

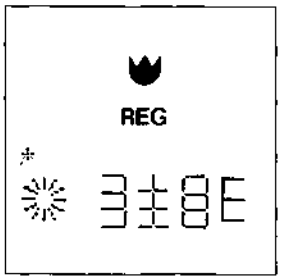

☆ When using wing needle, do not use thread cutter (needle may bend).

✻ Pattern is single pattern so press RPT or .

Quilting (Using Quilt guide)

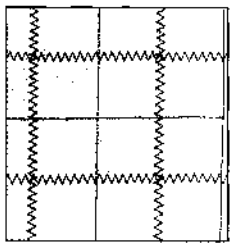

Two plies of material are joined together with parallel rows of stitching. Batting is usually placed between layers of material, which is used for protection against cold or for decoration.

1 Select pattern as desired.

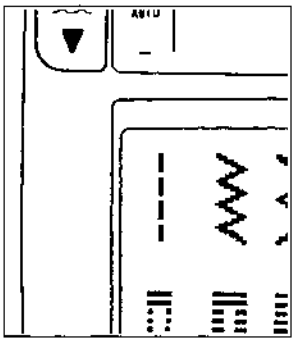

Select a pattern from straight stitch, zigzag patterns or all continuous patterns as desired.

2 When using zigzag stitch may use stitch width.

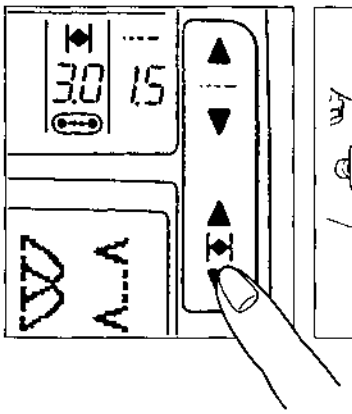

3 Use correct presser foot.

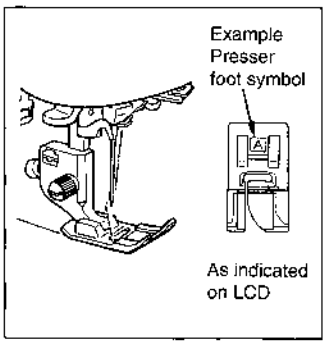

4 Attaching quilt guide.

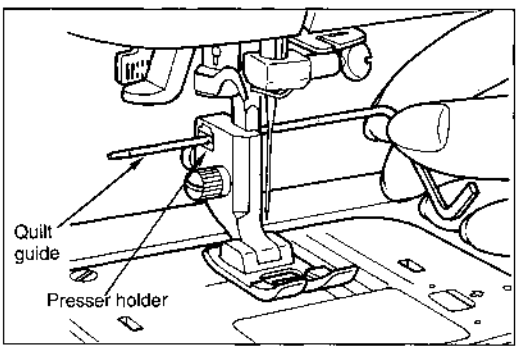

Insert quilt guide into hole in presser foot holder.

5 Sew quilting on material using quilt guide to trace pattern previously sewn.

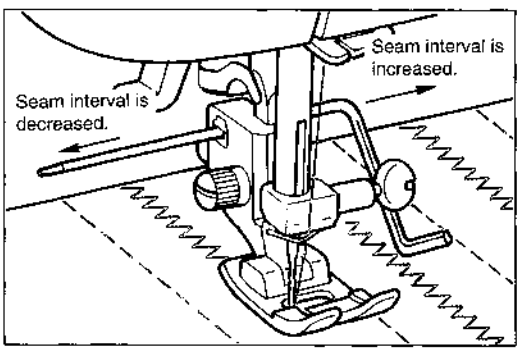

Spacing between lines of stitching may be adjusted by moving quilt guide.

Patch Work

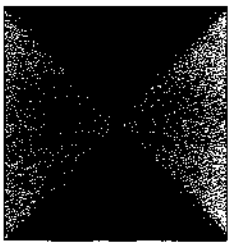

With pattern stitches, fabrics can be joined together to form a strong seam.

1 Select pattern.

Press | REG | button, and select desired pattern.

Choose one of above three patterns.

2 Use correct presser foot.

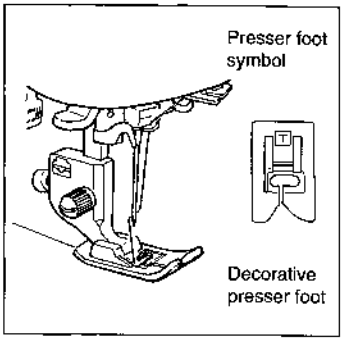

Overlapping Patch

1

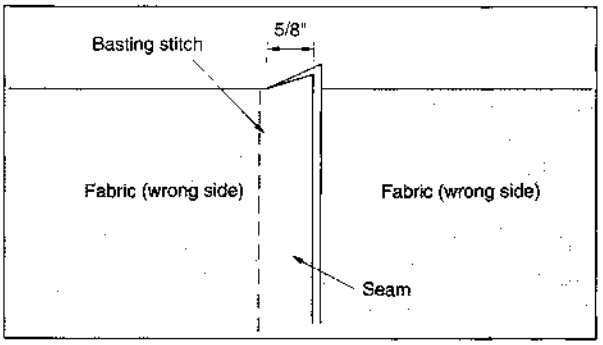

Place two pieces of fabric right sides together and sew a basting stitch. Press seam to one side.

2

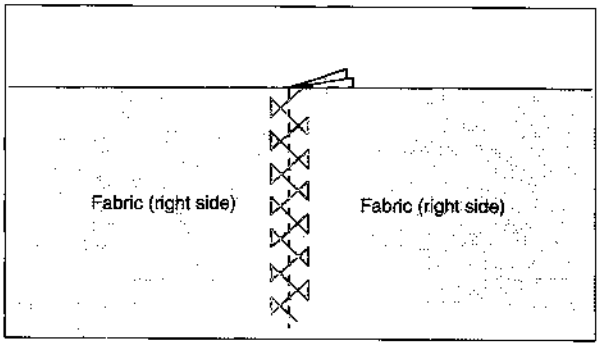

Sew a pattern stitch on top of seam.

Open Patch

1

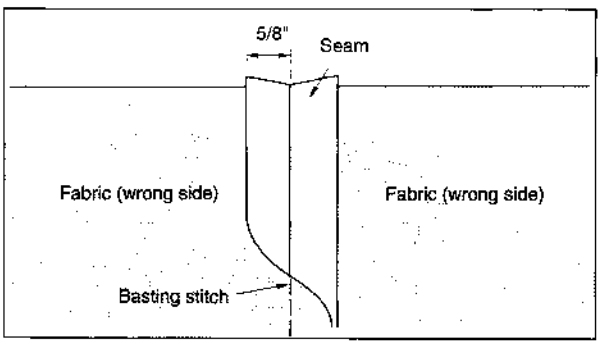

Place two pieces of fabric right sides together and sew a basting stitch. Press seam open.

2

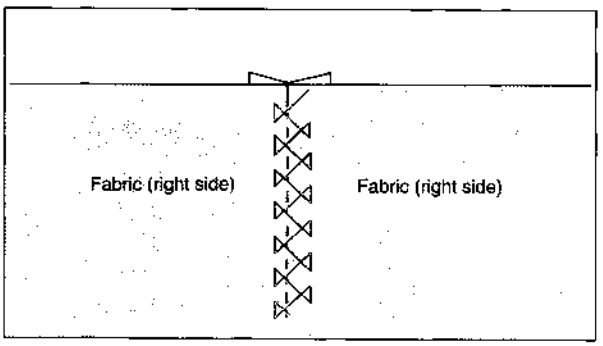

Sew a pattern stitch on top of seam. Remove basting stitch for open fagotted appearance.

Twin Needle Sewing

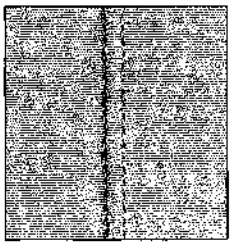

Twin needle sewing produces two parallel lines of closely-spaced stitching.

NOTE: Automatic needle threader and automatic thread cutter cannot be used.

IMPORTANT: Use only Singer branded twin needle style # 2025.

- With machine turned off, insert twin needle into needle clamp, and thread machine as for single-needle sewing through left needle eye.
- Attach auxiliary spool pin into hole by bobbin thread cutter. Place second spool of thread on it; and, again, thread machine as usual except as noted in point 4 below. The second thread will thread through right needle.

1 Attaching twin needle.

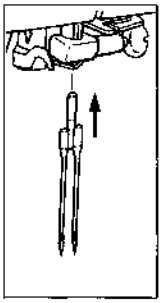

2 Use correct presser foot.

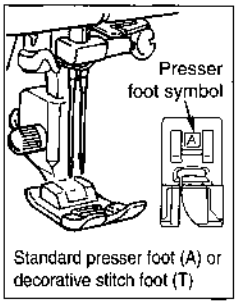

Use standard presser foot (A) or decorative stitch foot (T).

3 Attach auxiliary spool pin.

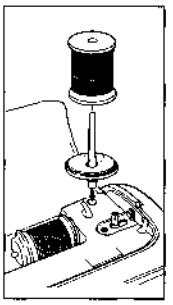

4 Thread machine.

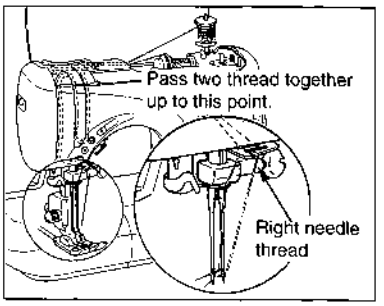

Thread left needle as usual.
Put right needle thread into outer slit, by-pass final thread guide and then through right needle.

5 Patterns for twin needle sewing.

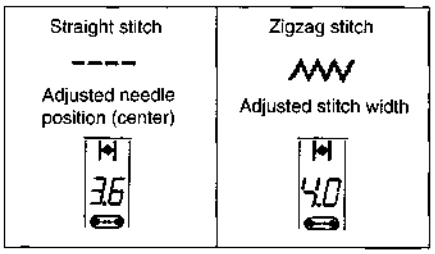

Select straight or zigzag patterns. Patterns illustrated on right are designed for twin needle sewing.

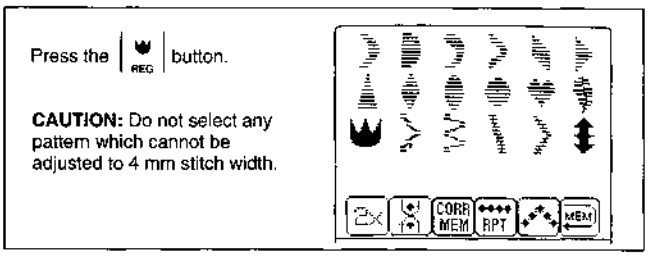

Caution: * If sewing with twin needle, never press the elongate or position key (since the needle will hit the presser foot).
* Sew at low or medium sewing speed.
* Do not use reverse stitch.

Pin Tucks

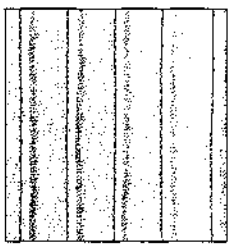

A type of fabric decoration. Commonly used in French sewing.

Traditionally, pin tucks are formed by stitching very near a folded edge, as shown in steps 1 through 5.

You can also sew pin tucks with a twin needle.
Twin needle tucks are always even as they are formed by two parallel needles. Decreasing top thread supply (increasing tension) will result in a more pronounced pin tuck.

1 Select straight stitch.

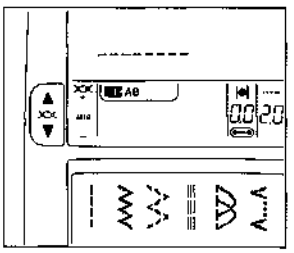

2 Use correct presser foot.

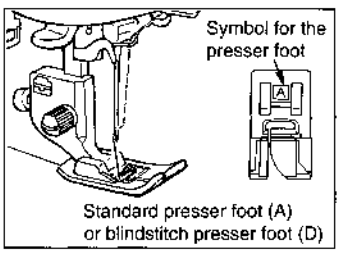

3 Make folds on material for pin tuck using an iron so that they are neatly finished.

4 Sew folds taking care not to stretch them.
A blindstitch presser foot guide will help finish the folds more beautifully.

5

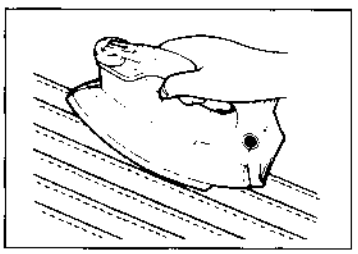

After finishing sewing, tilt pin tuck to one side and press.

Application examples

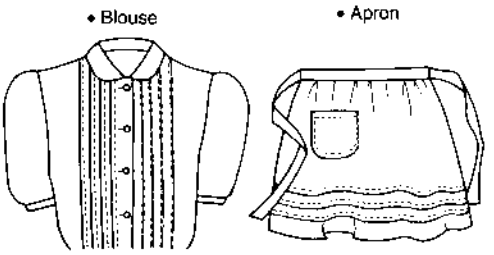

Darning/ Free-motion Embroidery

1 Remove presser foot holder.

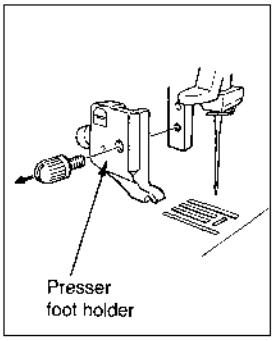

* Before removing presser foot holder, be sure to turn off power to sewing machine.

2 Move drop feed lever from up to down.

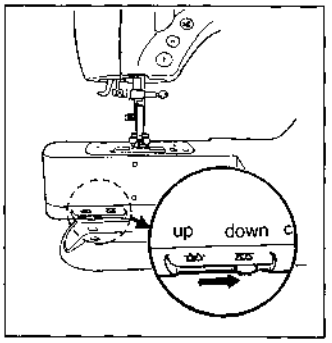

3 Select zigzag stitch pattern.

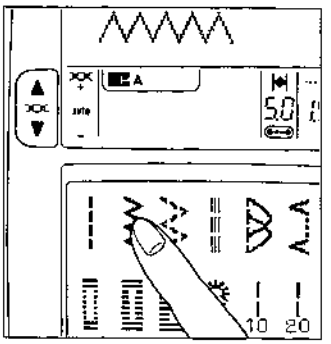

4 Select stitch width.

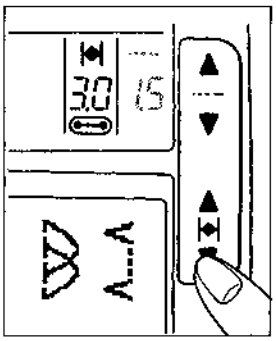

Select 0.3 to 7.0 (different stitch widths available)

5 Set stitch length to 4.0 to increase thread supply.

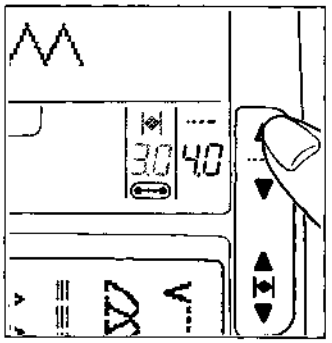

Set stitch length to 4.0 using stitch length override button.

6 Set embroidery hoop in place.

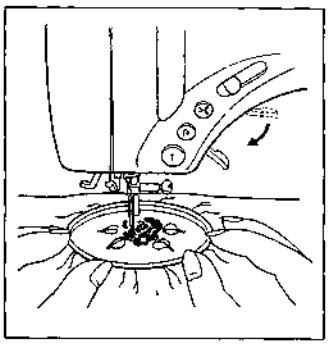

Lower presser foot lifter and start sewing.

NOTE: It is possible to sew without embroidery hoop if optional Darning/Embroidery foot is used. See page 53 for further information.

Rolled Hemming

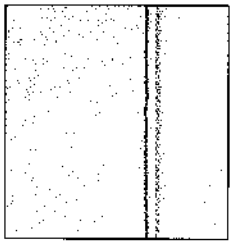

Material edge is hemmed while rolling it under.
Used for finishing bottom of shirts and blouses and edges of frills and handkerchiefs.

1 **Select desired stitch pattern.**

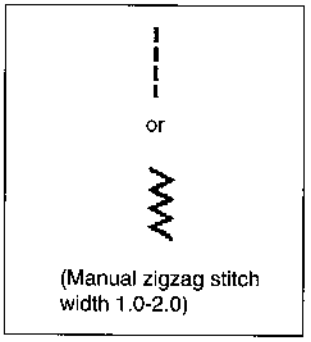

2 **Change foot.**

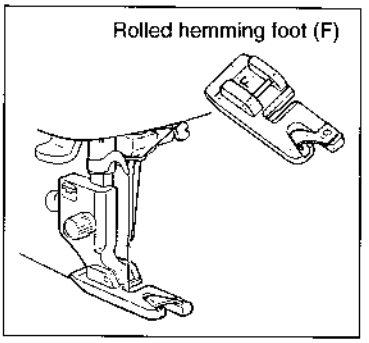

Attach rolled hemming foot supplied in accessory bag.

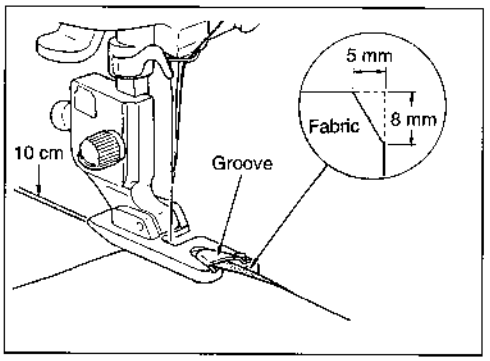

Cut away a corner of material in order to make work easier.
Insert material into spiral groove in hemmer foot until needle position is reached.

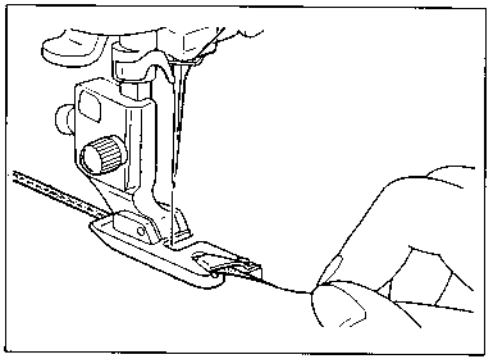

Drawing ends of needle and bobbin threads, turn handwheel 3 or 4 turns by hand to guide material to hemmer foot.

NOTE: Straight stitch needle position may be adjusted for perfect sewing position. (see page 15 or 23)

Even Feeding

To prevent slippage of material, use even feed foot.

* For matching plaids and designs.
* To prevent slipping, stretching or sticking when sewing fabrics such as synthetic suede, sheers, heavy knit and quilted.

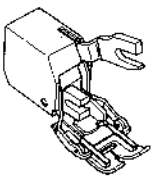

Use even feed foot only for forward stitching.
* Do not use it for any patterns which feed sideways or feed both forward and reverse.

1 **Select straight stitch.**

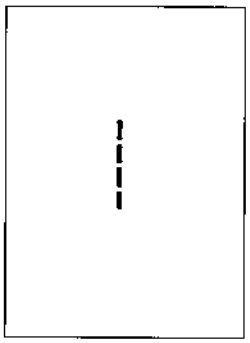

When power switch is turned on, straight stitch is automatically selected.

2 **Remove presser foot holder.**

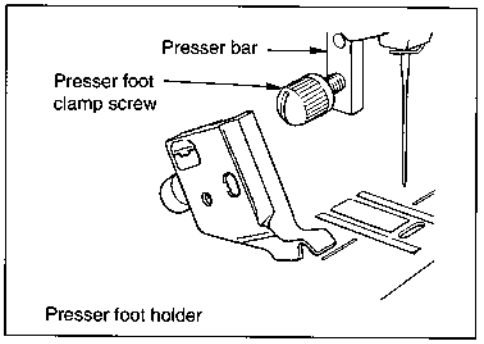

Lift presser bar, remove presser foot clamp screw and remove presser foot holder.

3 **Attach even feed foot to machine.**

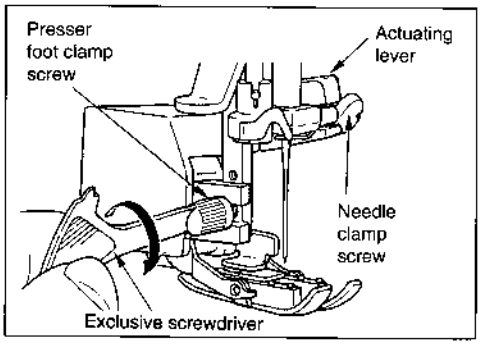

Put forked section of actuating lever around needle clamp, attach to presser bar and securely tighten presser foot clamp screw.

* Sew at low or medium sewing speed.
* To sew elastic materials such as knits and jersey, set presser foot adjusting lever to "LOW."

Inserting Zippers

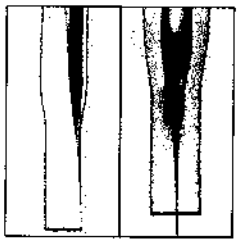

Zippers may be inserted in several ways. Type and location of zipper will help select right method.
Lapped zippers usually are inserted in side seam of the garment.
Centered zippers are centered in opening, and are suitable for almost all fabrics.

1 Select straight stitch.

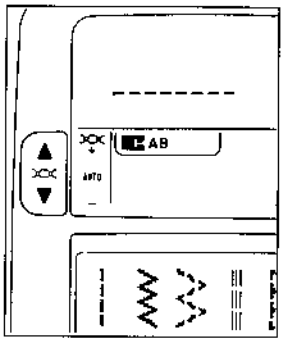

When power switch is turned on, straight stitch is selected automatically.

2 Use correct presser foot.

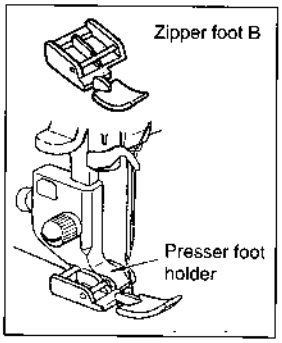

Attach zipper foot B to machine. Zipper foot can be put on to left or right of needle, depending on where bulk of garment is placed.

3

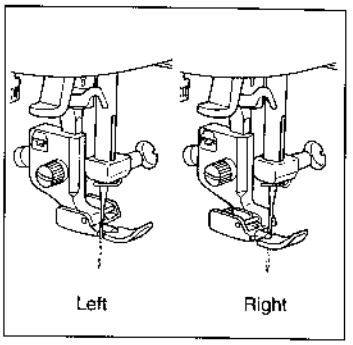

* If zipper is to left of needle, left side of zipper foot goes on shank.
* If zipper is to right of needle, right side of foot goes on shank.

Lapped Insertion

❶

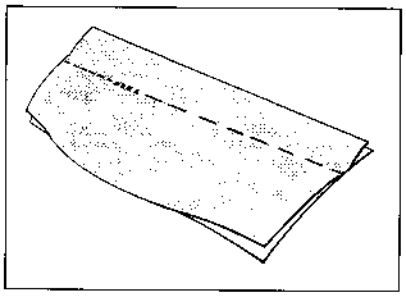

A zipper is lapped when one edge of fabric opening overlaps and conceals it, allowing only one stitching line to show.
* Machine-baste zipper opening together on seamline, and press open seam allowance.
* Attach left side of zipper foot to shank.

❷

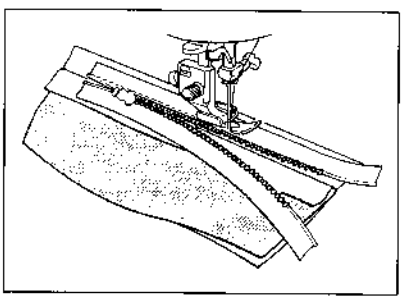

* Open zipper and flatten back seam allowance, as shown, with zipper face down and edge of teeth following seam line. Zipper's top should fall between 1/8" and 3/8" below garment top seam.
* Stitch zipper to seam allowance from bottom to top.

❸

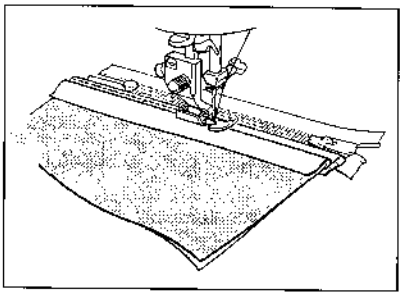

* Attach right side of zipper foot to shank.
* Close zipper and turn it face up.
* Smooth back seam allowance at edge of zipper.
* Stitch zipper from bottom to top, as shown, near seam allowance folded edge.

Centered Insertion

❹

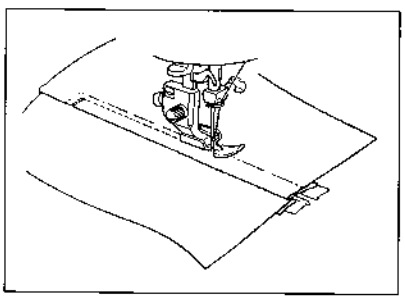

* Pin or machine-baste zipper to garment from wrong side, through zipper tape, seam allowance, and front of garment.
* Turn garment right side out.
* Attach left side of zipper foot to shank.
* Stitch across lower end of zipper and up to waistline. Use basting stitches as a guide.
* Remove basting and press.

1

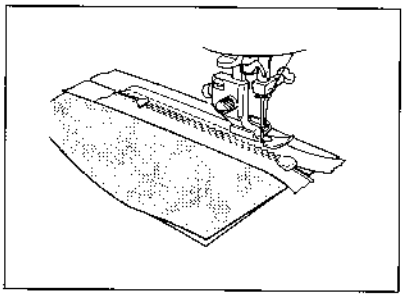

* Machine-baste zipper opening to seamline, and press open seam allowance.
* Place open zipper face down on seam allowance with teeth against seamline.
* Stitch zipper to seam allowance from bottom to top.

2

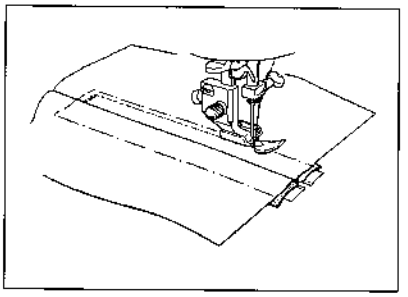

* Baste through zipper tape, seam allowance and garment exterior.
* Turn garment right side up and topstitch it to zipper, sewing through all layers.
* Remove basting and press.

Inserting Invisible Zippers

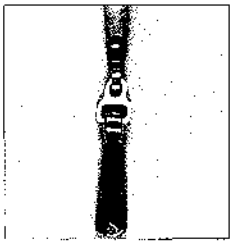

Since a seam does not appear on right side of material, opening can be finished with material edges neatly butted.

1 **Select straight stitch.**

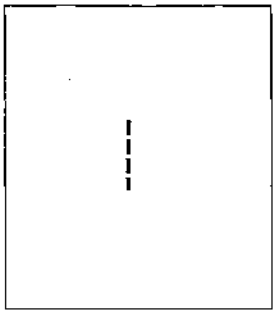

When power switch is turned ON, straight stitch is automatically selected.

2 **Change foot.**

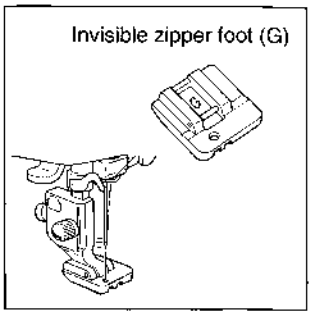

Attach invisible zipper foot supplied in accessory bag.

3

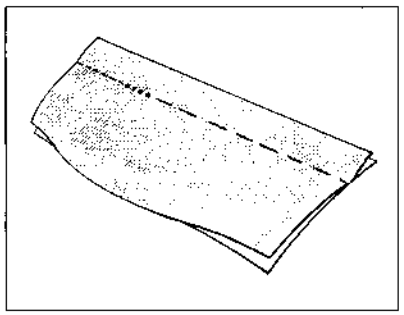

* Machine-baste zipper opening together on seamline, and press open seam allowance.

4

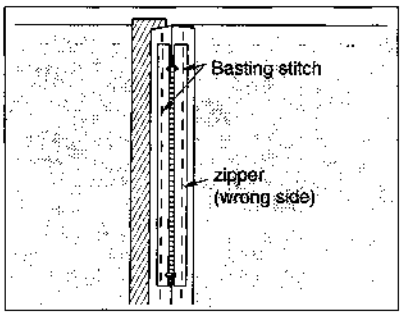

Set center of invisible zipper on seam. Baste zipper to seam allowances.

5

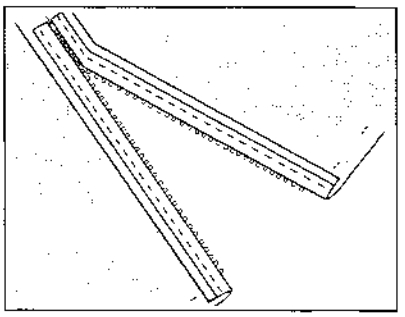

Undo basted seam up to opening end shown and open zipper.

6

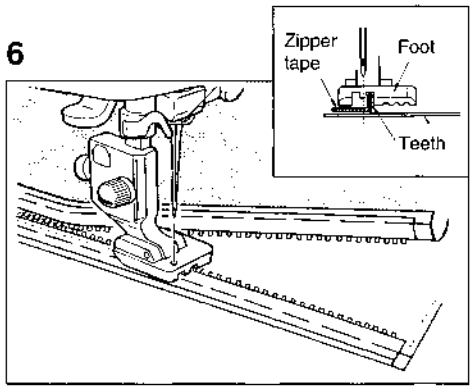

After fitting teeth of zipper to groove on invisible zipper foot and raising teeth with fingers, sew zipper tape on seam allowance from opening end by forming seam along edge of teeth.

7

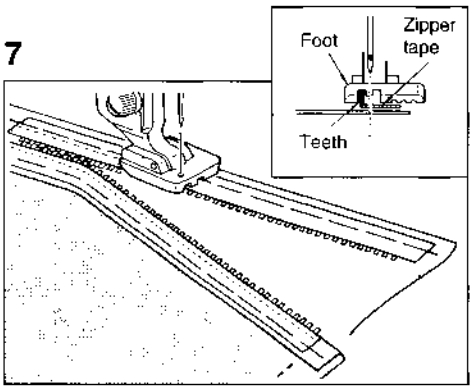

Sew other side of zipper tape on seam allowance using same procedure.

Manual Buttonholes

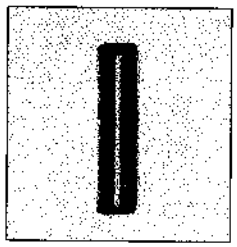

* Automatic foot can make buttonholes up to 1 1/2: use transparent foot to create larger buttonholes.
* To make ribbon casings
  Other uses for Transparent foot I.
* For french machine-sewing:mock whip and roll, pin-tucking and entredeux, are better controlled because there is a groove in bottom of foot.
* For satin stitching

1 Select desired stitch pattern.

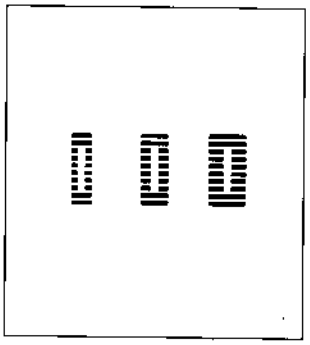

2 Change foot.

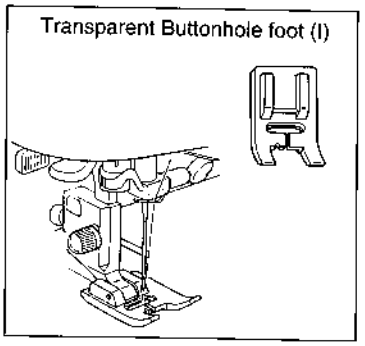

3

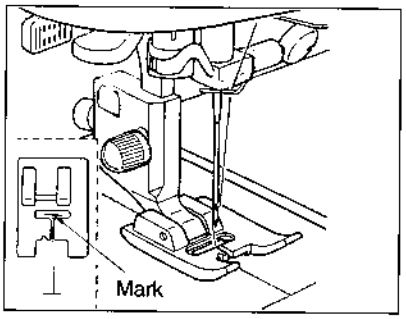

Mark material to indicate buttonhole placement.
Lower buttonhole foot so that mark is at center of needle hole in foot.

4

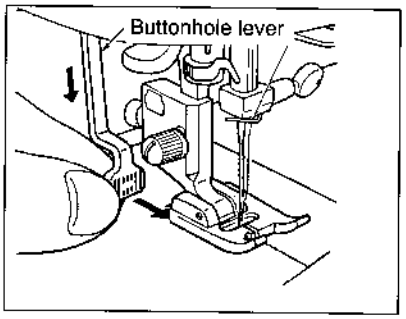

Lower buttonhole lever.

5

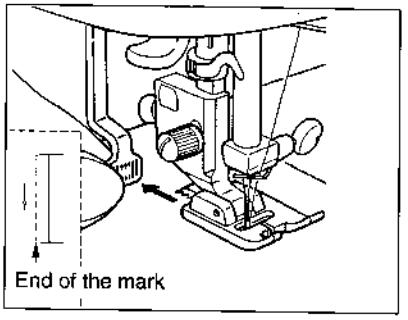

When needle reaches end of marker line, slightly press buttonhole lever towards rear of machine.

6

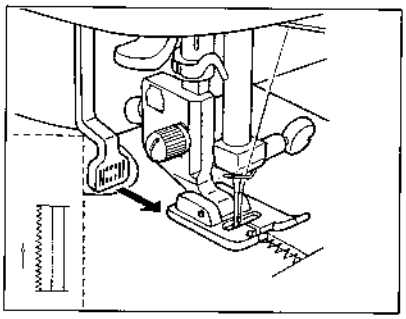

When needle reaches beginning of mark, slightly pull lever towards front of machine.
* Machine starts straight stitching on right-hand parallel section of buttonhole.

7 **Start sewing while slightly pulling buttonhole lever towards front of machine.**

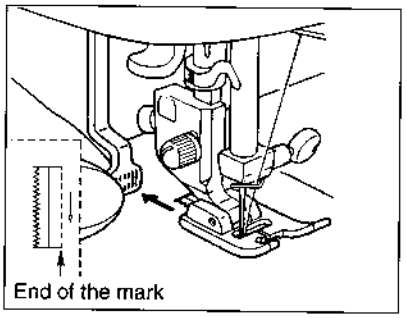

When needle reaches end of mark, slightly press buttonhole lever towards rear of machine.
* Machine starts zigzag stitching on right-hand parallel section of buttonhole.

8

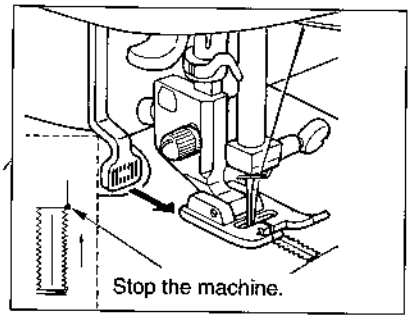

When needle reaches beginning of mark, slightly pull lever towards front of machine and sewing machine will start bartacking, perform fastening stitching and stop.

* If sewing machine does not operate as described above, stop machine and press buttonhole pattern key again. It will start buttonholing from beginning.

Attaching Cords

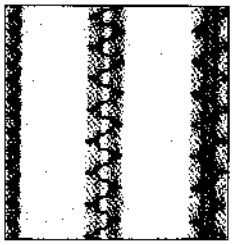

* Gathering and shirring
  Place pearl cotton into center of foot and zig-zag over it.
  Secure one end of pearl cotton and pull other end to gather.
  Use same method with elastic threads to create shirring.
* Decorative shirring
  Experiment with decorative threads, like ribbon thread or metallics.
  Place cording into slots and stitch using multi-stitch zigzag.
* Applying trims

1 Select desired stitch pattern.

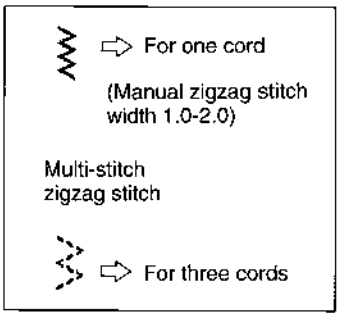

2 Change foot.

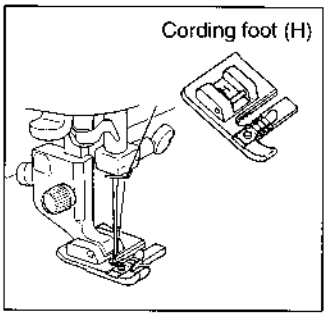

Sewing one cord

For sewing one cord, pass cord through center spring of cording foot, fit top end of cord in groove on sole of cording foot, then lower cording foot.

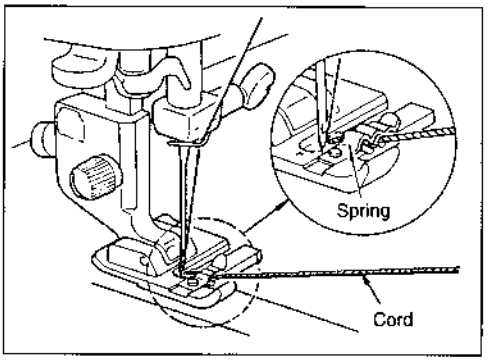

Sew cord on material using zigzag stitching function with zigzag width reduced (stitch width 1.0-2.0).
Make fastening stitches at beginning and end of seam by pressing reverse button.

Sewing three cords

For sewing three cords, pass cords through all springs of cording foot and fit cord ends in groove on sole of cording foot as in case of sewing one cord. Then, lower cording foot.

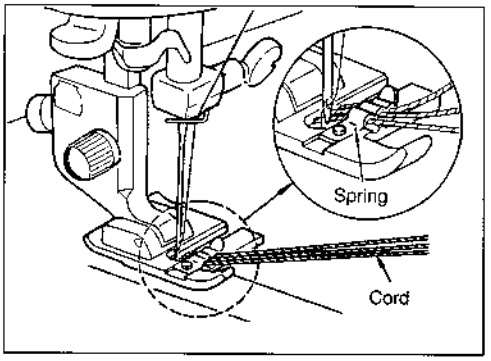

Sew cords on material using multi-stitch zigzag stitch pattern.
As in case of sewing one cord, make fastening stitches, draw cords out on wrong side of material and make a knot. Then trim cords.
* To sew two cords, pass cords through rightmost and leftmost springs.

Optional Accessories

* Always use Singer genuine accessory feet.
Off brand or generic accessories may cause poor performance, damage to sewing machine or injury.

Ruffler presser foot (Part No.386028)

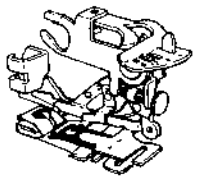

Ruffler quickly & easily produces professional looking ruffles on garments and home decorating.

Attaching ruffler.

* Be sure to turn power off before removing/attaching ruffler presser foot.

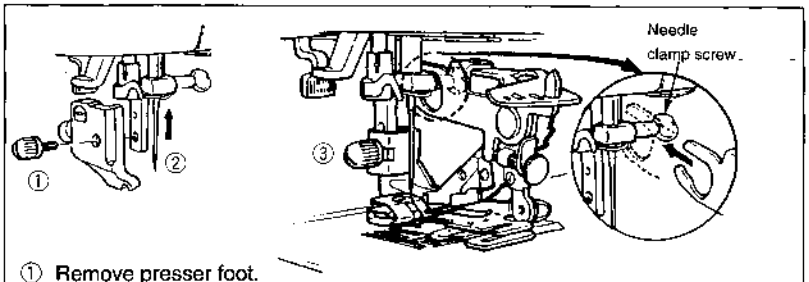

① Remove presser foot.
② Raise needle bar to highest position.
③ Fit ruffler fork onto needle clamp screw and attach to presser bar.
④ Tighten presser foot screw with exclusive screwdriver.

Select straight stitch pattern and adjust needle position to 1.0 (This is very important).

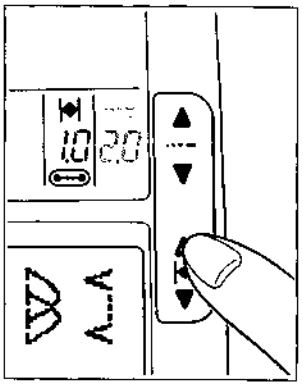

Ruffling.

**Note: Sew test swatch before sewing on project.

(1) Determine number of ruffles.

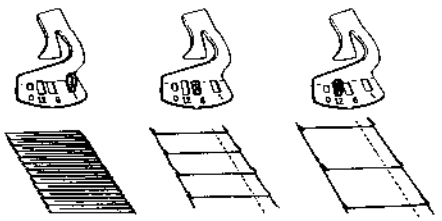

• Ruffles every stitch.
• Ruffles every six stitches.
• Ruffles every 12 stitches.

Straight stitch

(2) Adjust overlapping width of ruffles.

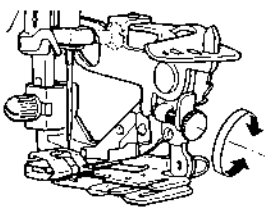

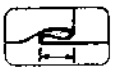

Ruffle overlap width increases.

Ruffle overlap width decreases.

(3) Place fabric under ruffler foot.

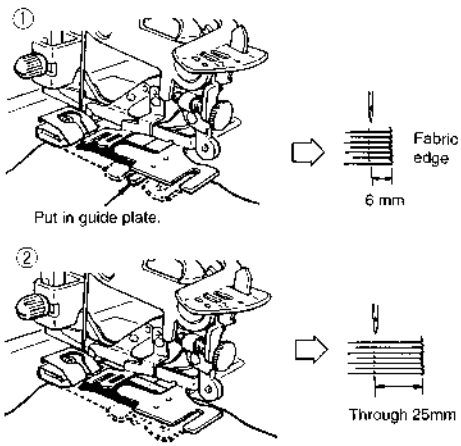

(4) Lower ruffler presser foot.

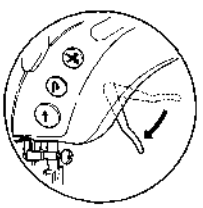

(5) Lightly push cloth feed plate towards back of machine.

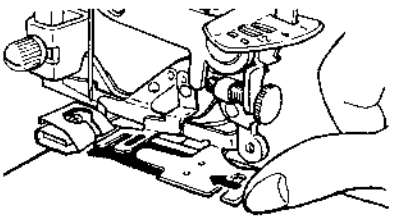

(6) Turn handwheel counter clockwise to lower needle into fabric until fabric begins to fold.

(7) Start Sewing.

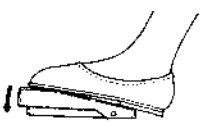

Optional Accessories

Pintuck foot (Part No.386022)

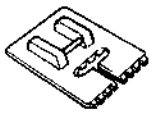

Uses:
- Sews evenly spaced plain twin needle pintucks.
- Sews evenly spaced corded twin needle pintucks.

Procedures:

Plain pintucks

1) Insert twin needle and thread machine with two spools of thread, using auxiliary spool pin. (See page 45)
2) Select straight stitch pattern and adjust needle to center position (3.6).
3) Mark straight line for first pintuck.
4) Stich along marked line. Increase tension as desired, to make pintucks stand up.
5) Place first tuck into desired groove on bottom of pintuck foot. Stitch, allowing groove to guide fabric for evenly spaced tucks.

Corded pintucks:

Follow procedure above, but place cording under fabric. Lower twin needle by hand to ensure cording is centered inbetween stitch, being sure to catch cording between needles.

Open toe embroidery foot (Part No.386023).

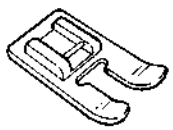

Uses:
- For satin stitching.
- For applique.
- For machine embroidery, cutwork and fagoting.

Procedures:
- This foot allows a clear view for sewing above techniques.
- Follow instructions found in Singer Sewing Reference Library Series.

Darning/embroidery foot (Part No.386017)

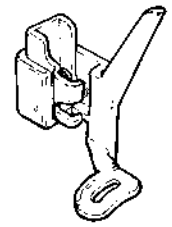

Uses:
- For free-motion embroidery, darning & monogramming.

Procedures:
1) Drop feed dog.
2) Place fabric into embroidery hoop (optional).
3) Attach foot and tighten presser foot screw with exclusive screwdriver. Begin stitching, moving hoop as you stitch. If not using hoop, grasp fabric firmly with two hands and hold taut.
   Sew at slow to medium even sewing speed.

Quilter's foot (Part No.386005)

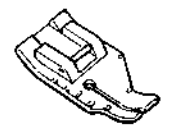

Uses:
- To sew perfect 1/4" seams for piecing quilt blocks.
- To sew narrow seams, such as those in doll clothes.

Procedures:
- Use in place of A foot.
- Select straight stitch pattern full left (automatic) position.

Side cutter (Part No.386001)

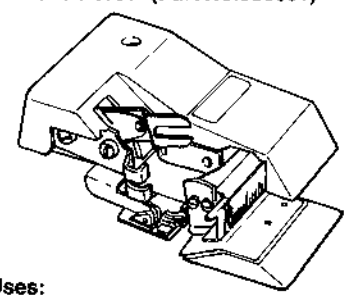

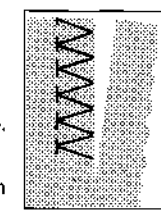

Uses:
- To cut and overedge fabric in one step.

Procedures:
- Remove presser foot holder and attach side cutter. Follow instructions which come with side cutter.
- Tighten presser foot screw with exclusive screwdriver.

Embroidery

Setting up machine to embroider

Precautions to be taken when embroidering.

1. Be sure to turn OFF power to machine before attaching/removing embroidery bed and embroidery card to/from machine.
2. Be sure to keep embroidery cards in original case for storage.
3. Do not carry main unit of sewing machine with embroidery bed attached.

* When embroidery bed is used with sewing machine, foot speed controller cannot be used.

14 **Thread needle.**

15 **Lower presser foot.**

16 **Begin sewing. (see below)**

2 **Attach embroidery presser foot (J).**

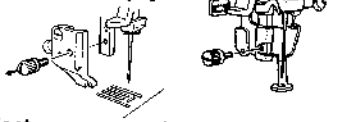

⚠ CAUTION:
Tighten presser foot screw securely with exclusive screwdriver!

7* **Lift presser foot and attach embroidery frame. (see below for details)**

3* **Attach embroidery bed.**

4* **Set lever of embroidery bed to the rightmost position. (see below)**

5 **Place full bobbin in bobbin case.**

■ To obtain neatly-finished embroidery

Type of thread	Needle thread		Use good quality thread designed for sewing machine embroidery.
	Bobbin thread		White 100% Polyester lightweight 80 to 100 weight
Type of needle			Singer red band woven size 11/80 or size 14/90

* To embroider difficult-to-feed materials such as light-weight materials and elastic materials, adhere a piece of temporary-sticking type of fusible interfacing (non-woven fabric), using an iron (temperature low to medium) on wrong side of material.

■ Placing embroidery bed in position.

1 Remove auxiliary bed. **2** Slide embroidery bed ❶ to right. Push lever ❷ to right.

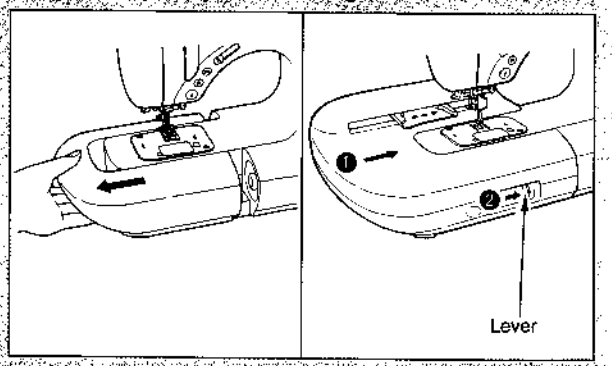

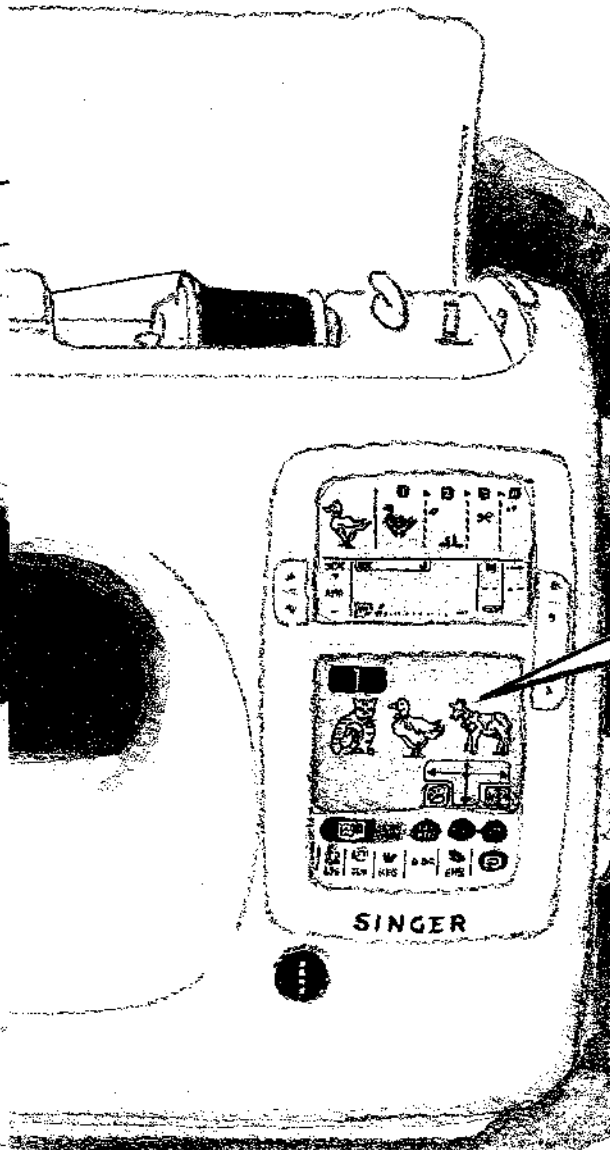

9 If upper LCD window gives indication.

Raise presser foot.

10 If upper LCD window gives indication.

Raise needle.

11* Select pattern.

12* Press arrows on

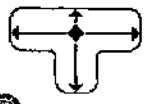

key to determine location on fabric where pattern is to be sewn.

13* Press key to check sewing range.

6* Securely insert embroidery card into slot until it will go no further.

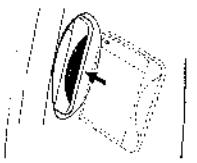

1 Turn off power to machine.

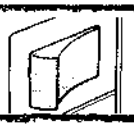

8 Turn on power to machine.

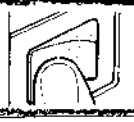

* Additional instructions on pages 56 and 57.

■ Attaching embroidery frame

1. Secure attaching frame.

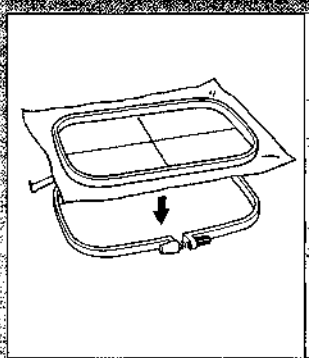

See next page for how to attach material to frame.

2. Slide embroidery frame [illegible] 2 [illegible]

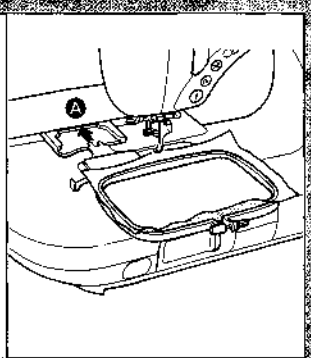

Be sure to raise presser foot to allow clearance to attach frame.

■ Starting embroidery

1. Pass thread through hole in presser foot.

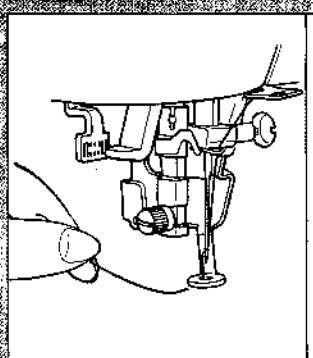

Lightly hold thread end.

2. Sew three to five stitches. Stop and trim thread.

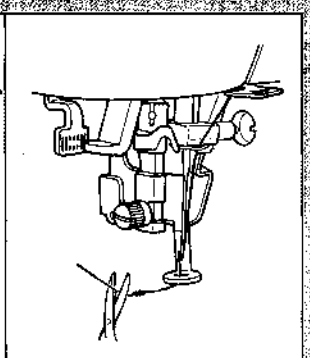

Now, start sewing machine again.

Preparation for Embroidery

Precautions to be taken when embroidering

■ Attaching/removing embroidery bed

1 Turn off power switch.

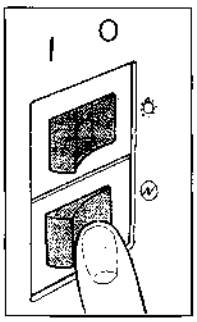

2 Slide embroidery bed to right on to machine.

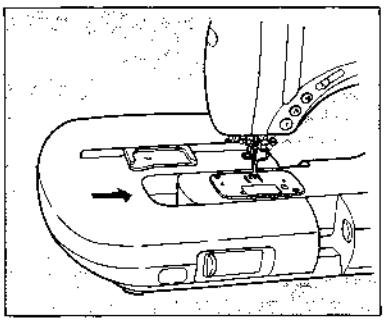

Attach/remove embroidery bed to/from machine while on level table.

3 Push connector lever to rightmost position.

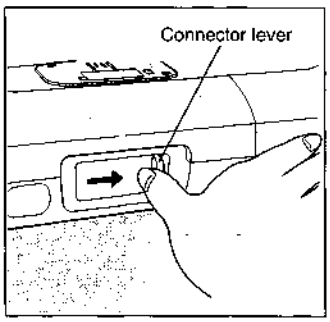

To remove embroidery bed from machine

1. Turn off power switch.
2. Return connector lever to leftmost position.
3. Slide embroidery bed to left from machine.

■ Inserting/removing embroidery card

1 Turn off power switch.

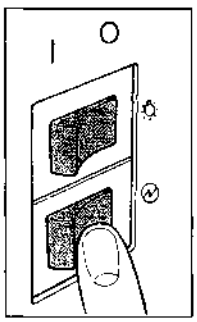

2 Hold embroidery card with arrow shown on it faced forward, insert card straight into slot until it will go no further.

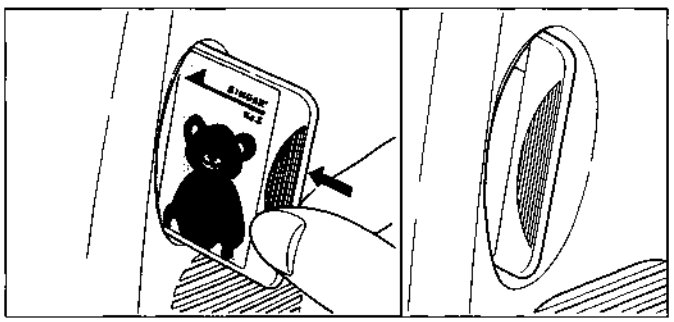

To remove embroidery card from machine

1. Turn off power switch.
2. Pull card straight out from slot.

■ Securing material in embroidery frame

All fabrics will sew better if permanent or temporary – sticking non-woven fusible interfacing is adhered to the back of material.

1 Draw marker lines on material with assistant marker.

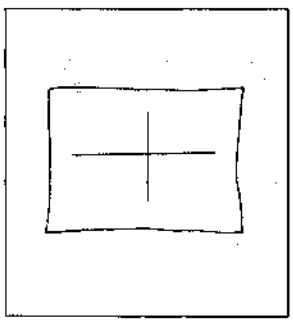

2 Loosen frame adjusting screw and place material between inner and outer frames.

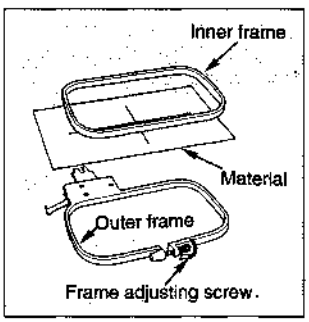

Position material so marker lines align with raised marks on frame.

3 Slightly tighten frame adjusting screw, pull material edges to remove slack.

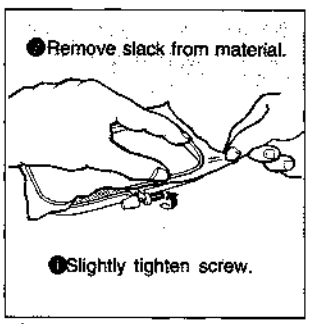

⚠ **CAUTION:** Make sure inner frame is completely inserted into outer frame to avoid frame dislodging during sewing.

4 Once material is properly positioned with no slack, securely tighten frame adjusting screw.

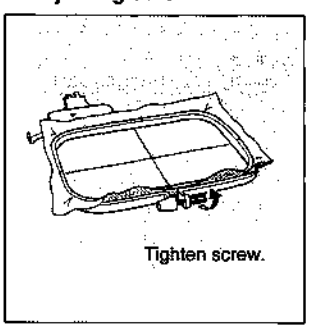

■ Attaching/removing embroidery frame

1 **Fully raise embroidery presser foot and put embroidery frame under it.**

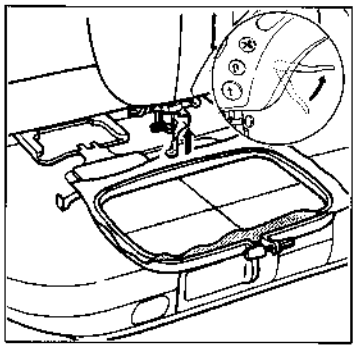

2 **Slide frame into slot located on embroidery bed until it clicks.**

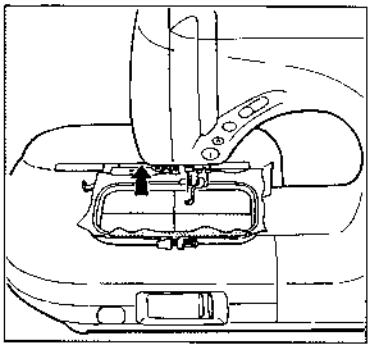

To remove embroidery frame from sewing machine

Pull embroidery frame towards front of machine while pressing frame lever.

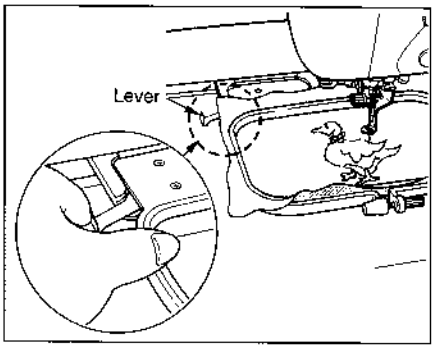

Fully raise embroidery presser foot and pull out frame from under presser foot.

■ Determining location of embroidery, inside embroidery frame

Lower LCD panel

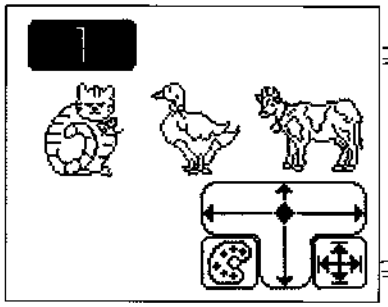

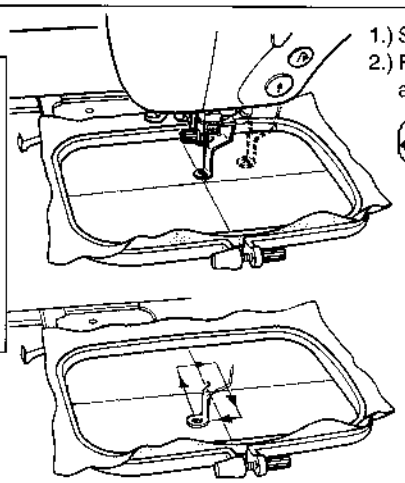

1.) Select pattern
2.) Press one of the four-direction arrows

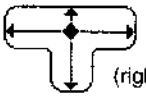

(right / left / up / down) on key, and frame will move in direction of arrow pressed.
Adjust so embroidery presser foot is at center of marker lines.

3.) Press key, and frame will move to show embroidery area.

NOTE: When pressing key, warning sound indicates frame will move no further in that direction.

■ Letter embroidery guide

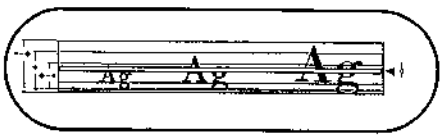

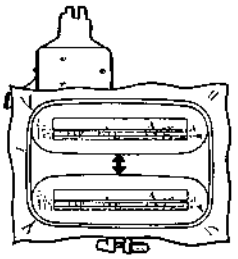

This guide plate indicates standard, reduced and enlarged sizes of letters to be embroidered.
Use guide to confirm possible embroidery area extending from top end to bottom end of embroidery frame, needle position and reference line of letter pattern to be sewn.

How to use letter embroidery guide.

1) Draw needle entry line on fabric with assistant marker using needle hole slot ◀ | in letter embroidery guide.
   Use letter embroidery guide for checking upper and lower sewing range.
2) Secure material in embroidery frame (see page 56).
   Attach embroidery frame (see page 57).
3) Enter desired letters into memory.
4) Use the four direction arrows 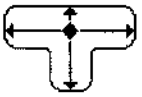 up or down to position the needle over the marker line on the fabric. Use the left or right arrows to locate the center of the letters to be sewn.
5) Press sewing range key to check left most and right most range.

■ Initial letter embroidery frame

Material can be secured in frame following same procedure as large frame. This frame is suited to embroidery of a small number of letters. Initial frame can only be used with 1.0 and 0.7 cm letters.

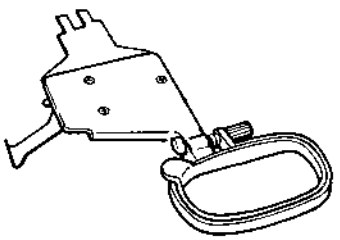

Sampler Card Patterns of Embroidery

Each time | EMB | button is pressed, lower LCD touch-screen will change to show 6 different screens (total 23 patterns).

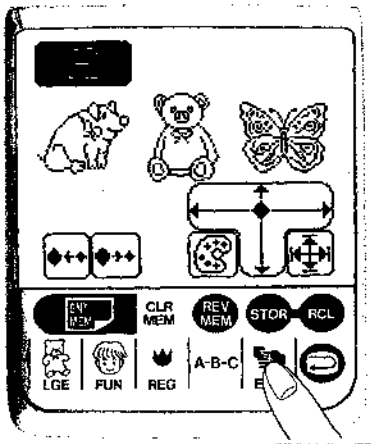

1. Outline embroidery

* Entire pattern is embroidered using a single color needle thread.

(1) Press pattern appearing on the lower LCD touch-screen.
(2) Pattern will appear on upper LCD window.
(3) Determine area of pattern to be embroidered inside frame by pressing arrows on key.
(4) Confirm sew area with key.

2. Multi-color embroidery

(1) Press key, and color steps will be shown on upper LCD window.
(2) Follow steps 3 and 4 in outline embroidery.
(3) Change needle thread to yellow and start sewing machine. When pattern is finished, machine will automatically stop and cut thread.
(4) Follow step 3 to sew other colors of pattern.

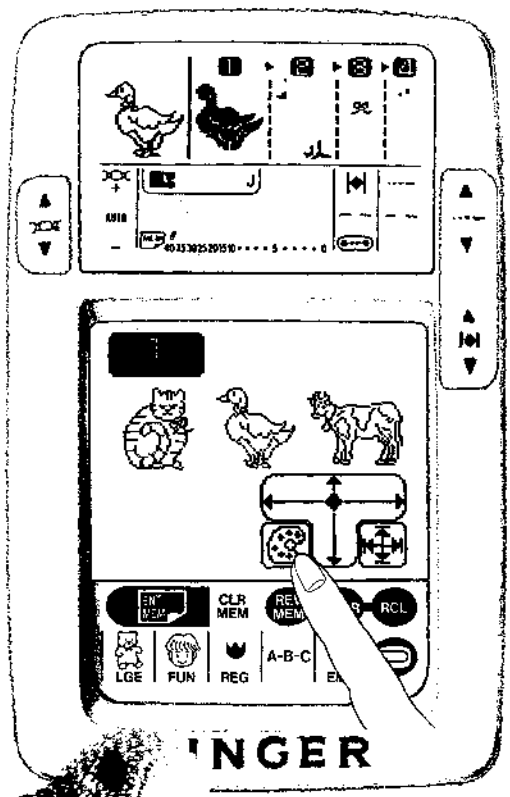

Example of multi-color embroidery

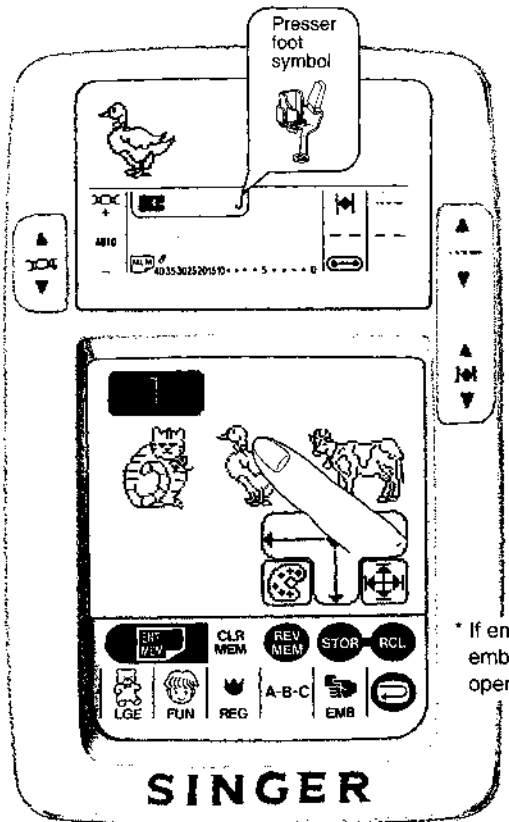

* If embroidery pattern area exceeds embroidery frame, machine warns operator with an electronic sound.

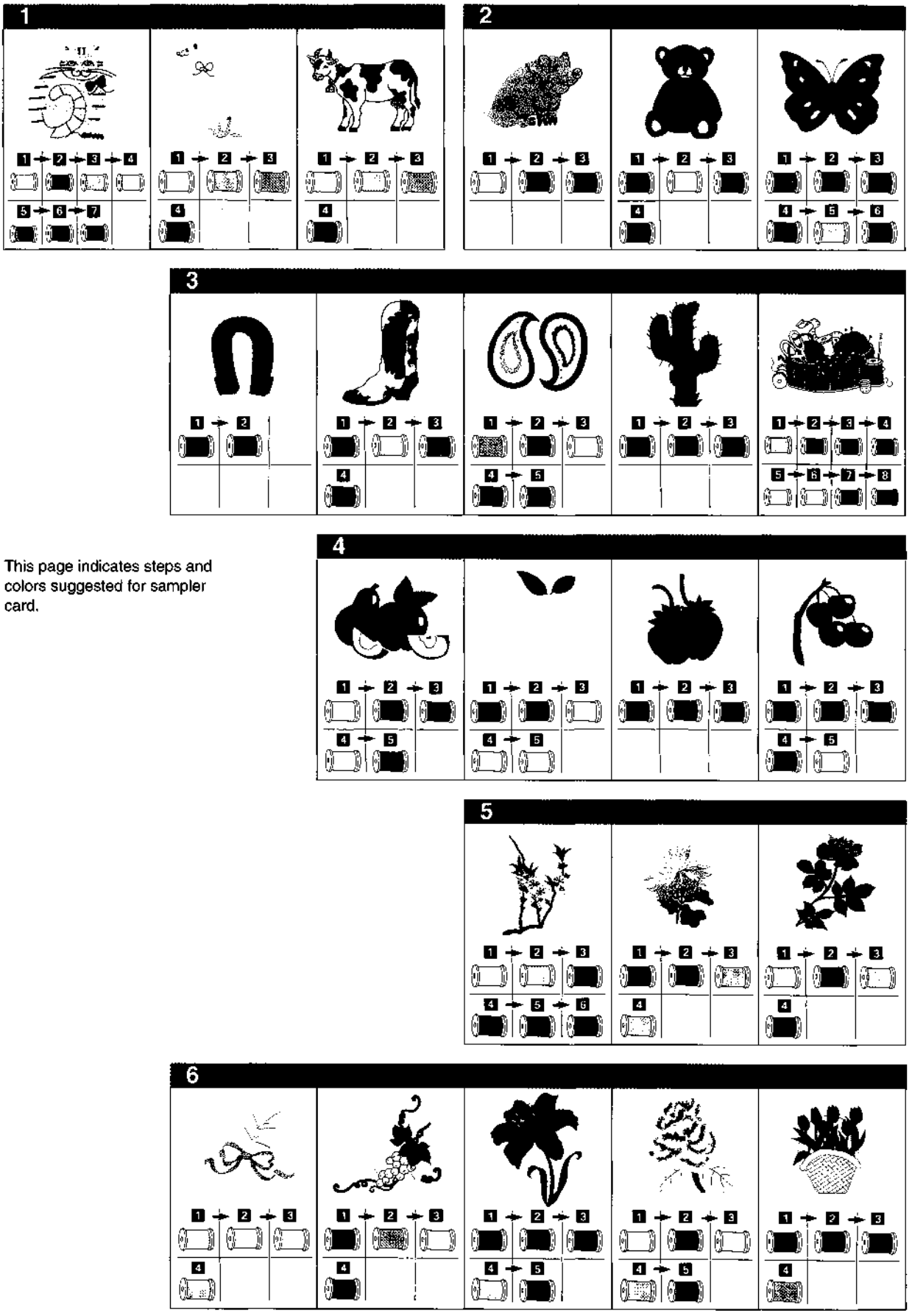

This page indicates steps and colors suggested for sampler card.

Letters Card of Embroidery

(1) Attach embroidery bed, letters card and frame.

(2) Pressing key once will select 𝒜.

Pressing key again will select ℬ.

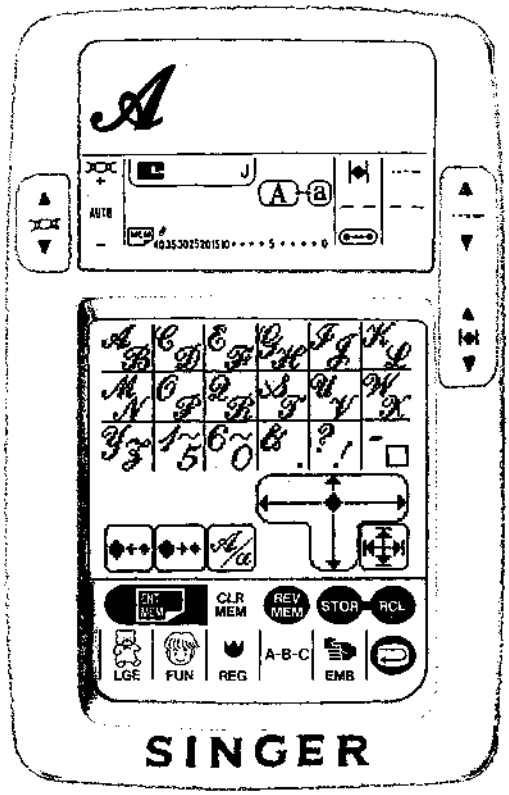

Standard size

When the key is pressed: 𝒜 10 mm → 𝒜 15 mm

When the key is pressed: 𝒜 → 𝒜 7 mm

When the key is pressed: 𝒜 → 𝒶 Lower case letters are shown.

For each of aforementioned keys, two presses will return screen to standard.

When sewing small size letters it is recommended to use # 11/80 needle and fine thread to improve stitching quality.

Function buttons	
	Press button and selected letter will be stored in memory. Press button for every letter to be placed in memory. *The number of letters that can be stored in memory depends on size of letters.
	If you have placed a wrong letter in memory, press button to delete from memory.
	Press button to check letters in memory.

NOTE: Letters are of 3 types, each in upper and lower case and 3 sizes.

NOTE: The optional large letters card (see page 64) comes with additional instructions and letter embroidery guide. It is necessary to follow those instructions which are specific for large letters. Instruction manual instructions will not work with large letter card P/N 386048.

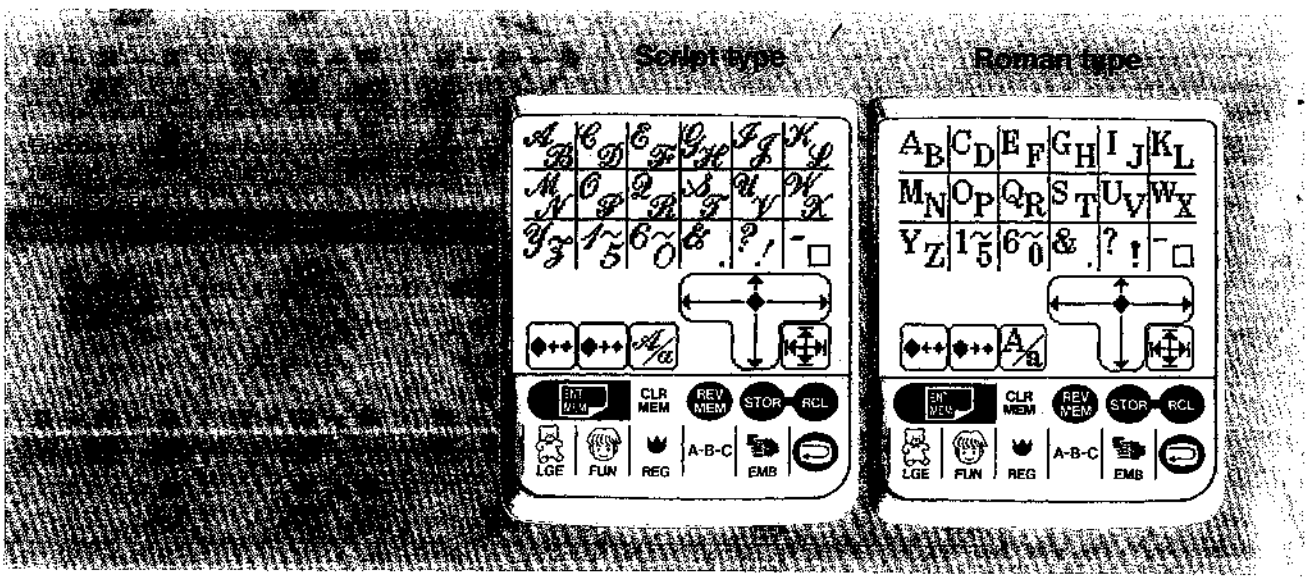

ABCDEFGHIJKLM
NOPQRSTUVWXYZ
abcdefghijklm
nopqrstuvwxyz
1234567890
&.?!-□

ABCDEFGHIJKLM
NOPQRSTUVWXYZ
abcdefghijklm
nopqrstuvwxyz
1234567890
&.?!-□

ABCDEFGHIJKLMN
OPQRSTUVWXYZ
abcdefghijklmn
opqrstuvwxyz
1234567890
&.?!-□

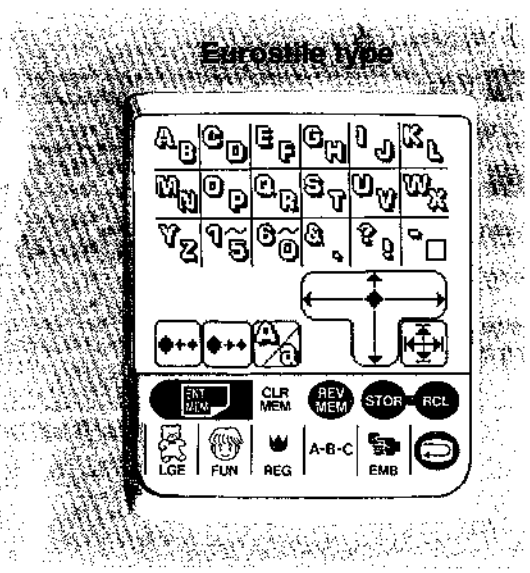

Space key: □

Example (combination of sampler and upper/lower case script).

Follow steps of procedure in numerical order.

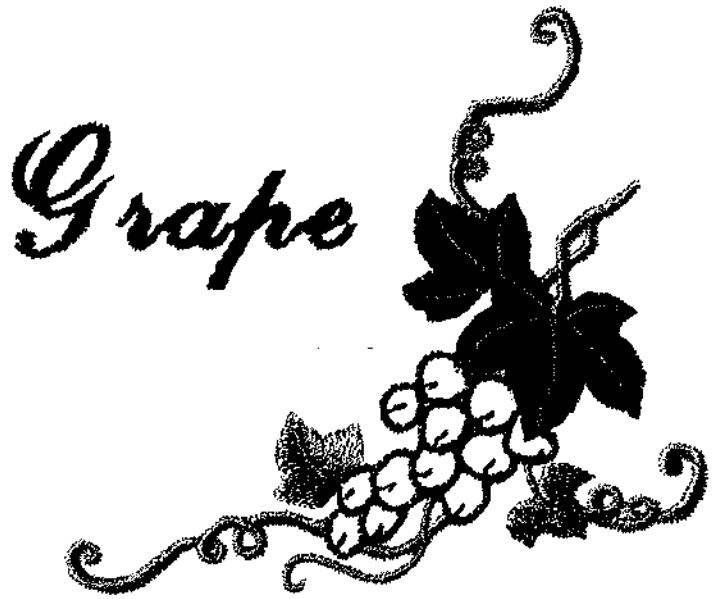

1. Turn off power to machine. Put embroidery bed on machine. (See page 54.)
2. Determine location of pattern to be sewn and draw a reference marker line on material with assistant marker.

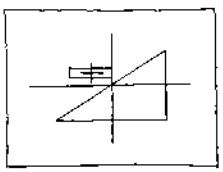

3. Secure material in embroidery frame. (See page 56.)
4. Insert sampler embroidery card into slot on machine.
5. Install embroidery frame on embroidery bed.
6. Turn on power to machine.
7. Raise needle and embroidery presser foot.
8. Select pattern
9. Press multi key.
   Multi-color No.1 Blue/green
   2 Gold
   3 Light green
   4 Purple
10. Determine center of pattern using key.
11. Check sewing area using key.
12. Place blue/green needle thread in position, and lower presser foot.
13. Start sewing machine. After completion of part of pattern which is embroidered with blue/green needle thread, machine will stop and cut thread.
14. Follow steps 12 and 13 to finish other colors in grape pattern.
15. After completion of sewing grape pattern, turn OFF power to machine.
16. Remove sampler embroidery card.
17. Insert slot letter embroidery card into slot on machine.
18. Turn on power to machine.
19. Press key. ( )
20. Press button.
21. Press key twice. ( )
22. Press key to change upper case to lower case letter. ( )
23. Press button.
24. Press key. ( )
25. Press button.
26. Press key twice. ( )
27. Press button.
28. Press key. ( )
29. Press button.
30. Determine center of letters using key.
31. Check sewing area using key.
32. Thread needle with desired color.
33. Start sewing machine.

Troubles in Embroidering

If thread breaks during embroidering:

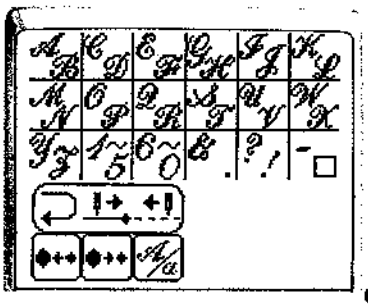

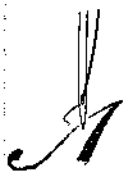

1. Stop sewing machine.
2. Raise needle.
3. • In case of needle thread breakage:
   Properly thread machine head again.
   • In case of bobbin thread breakage:
   Trim needle thread and remove embroidery frame from machine.
   Properly install bobbin thread in bobbin case and attach embroidery frame.
4. Press [←!] key to feed material backward until troubled part is reached. Then, further feed it backward a little.
5. Lower presser foot and start sewing machine.
   * After sewing, draw thread remaining at beginning of sewing to backside of material and tie. Then, trim thread.

* Use [!→] key if material is fed beyond desired position with [←!] key.

To re-embroider troubled pattern from start:

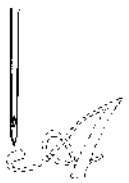

1. Stop sewing machine.
2. Raise needle.
3. Press [↩] key, and needle will return to sewing start point.
4. Lower presser foot and start sewing machine.

Helpful messages given on LCD window during embroidering:

MEM Memory is full.	Embroidery card is not installed. Turn off power and install properly.
Raise needle.	This card cannot be used. Change it with another one.
Lift presser foot lifter.	CLR Delete pattern with clear key.
Place embroidery frame on machine. Place embroidery frame in position on machine.	Lower presser foot lifter.
Change to full size embroidery frame.	Change needle thread to a different color.

Optional Embroidery Cards

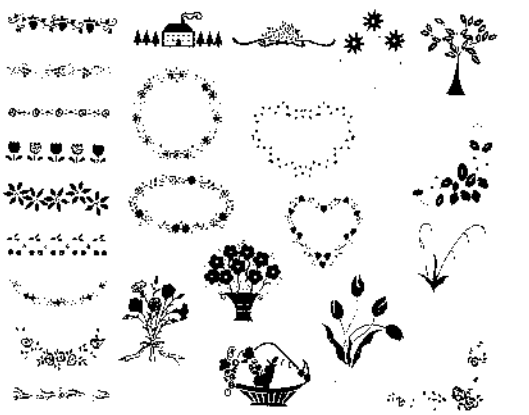

ABCDEFGHIJK
LMNOPQRSTU
VWXYZ
1234567890
&.?!-□

ABCDEFGHIJK
LMNOPQRSTU
VWXYZ
1234567890
&.?!-□

ABCDEFGHIJK
LMNOPQRSTU
VWXYZ
1234567890
&.?!-□

NOTE: Large letters are 25 and 40 mm.

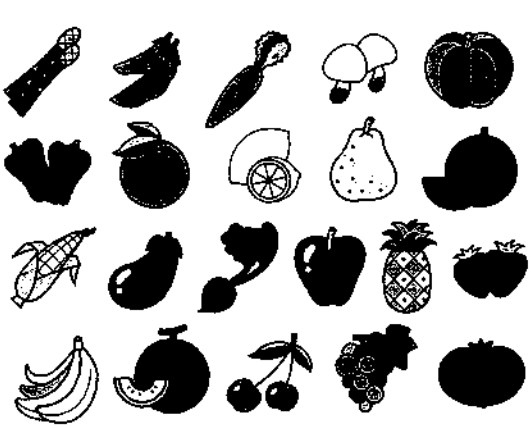

CAUTION: Be sure to disconnect plug from wall outlet before opening cover.

How To Replace Light Bulb

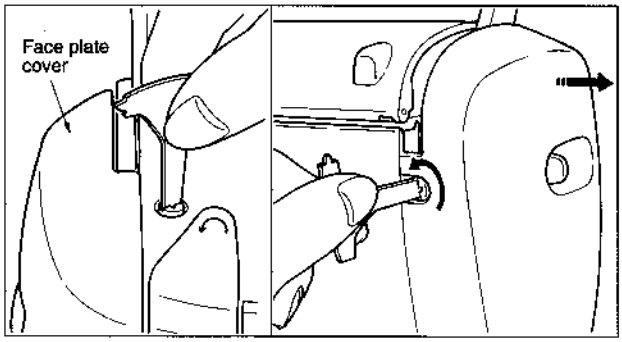

Using exclusive screwdriver, loosen setscrews at rear and top side of face plate cover about two turns, and pull cover straight off.

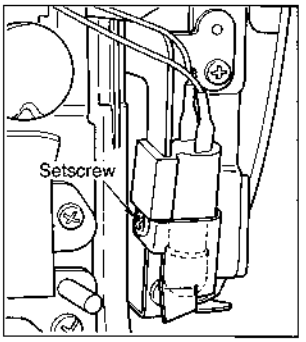

Remove lamp cover.

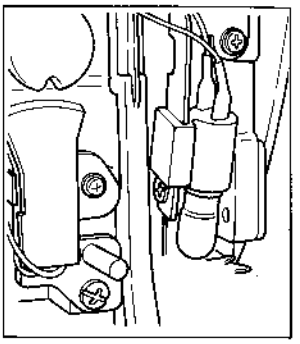

Remove bulb by pushing bulb upward and turn to left. Replace by pushing upward and turn to right.

Cleaning

Removing lint and dust
Accumulation of lint or dust may cause problems. Always keep sewing machine clean.

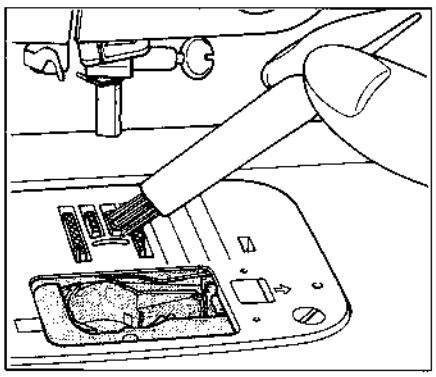

CAUTION:
Be sure to disconnect plug from wall outlet before cleaning machine.

Remove needle and presser foot, and clean area between feed dog teeth and slots in needle plate, using brush furnished with machine.
Always keep area around hook and bobbin case clean.

CAUTION:
Contact dealer for correct light bulb replacement.
Power consumption of bulb is 5 watts.

How to Replace Needle Threader Hook Holder (Optional Part) Part No.283075

CAUTION: Be sure to disconnect plug from wall outlet before removing needle.

1 Remove needle and presser foot.

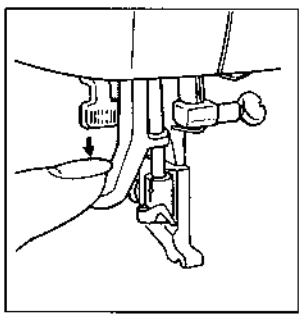

Push threading lever halfway down.

2 Place exclusive screwdriver on top of hook holder and push down.

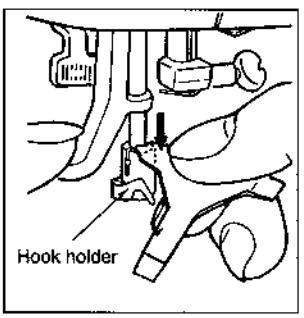

3 Align slit in new hook holder with needle threader shaft pin.

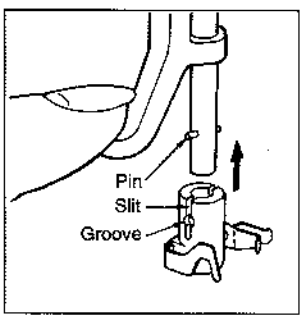

4 Push new hook holder up from bottom with finger until it snaps in place.

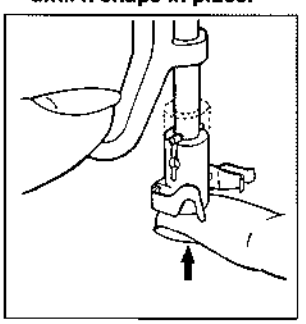

Performance Checklist

If sewing difficulties occur, make sure instructions are correctly followed. If a problem still exists, reminders below may help solve it.

	Problem	Cause (Reason)	Action to be taken	Page
	• Sewing machine suddenly stops during sewing. • Light is on, and handwheel can be turned by hand smoothly.	• Sewing machine has been run at low sewing speed for an extended period of time. • Machine is designed to automatically turn motor power off to prevent overheating.	• Turn power switch off, and wait for about 20 minutes. Safety device will reset, and machine will be ready to operate.	–
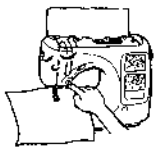	• Needle will not move.	• Upper thread has run out. • Presser foot is up. • Bobbin winder shaft was left in winding position. • Buttonhole lever was not lowered when machine was placed in buttonhole mode.	• Replace empty spool, and thread machine. • Lower presser foot. • Move bobbin winder shaft back fully to left. • Lower buttonhole lever.	20 20 20 20
	• Sewing machine will not run.	• Presser foot is not correct one, and needle hits presser foot. • Needle has come out and is in hook of machine.	• Replace presser foot with correct one. • Remove needle and insert new one.	8 21
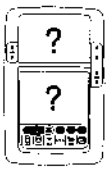	• LCD window and/or LCD touch-screen blank or totally blue.	• LCD brightness control knobs have accidently been rotated to wrong position.	• Readjust knobs to desired brightness and contrast.	15
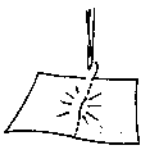	• Thread breaks. • Skipped stitches	• Threading is not correct. • Thread has a knot in it. • Thread tension is not correct. • Needle is bent or blunt. • Needle has been inserted wrong. • Bobbin has not been fully inserted in bobbin case. • Bobbin case has been incorrectly threaded. • Bobbin does not turn smoothly in bobbin case. • Needle and threads do not match. • Thread take-up lever has not been threaded.	• Correctly thread machine. • Remove knot. • Correct thread tension. • Replace needle. • Properly insert needle. • Securely install bobbin into bobbin case. • Correctly thread bobbin case. • Check to see that bobbin has been wound evenly. • Use proper thread or needle. • Check threading order.	12,13 21 21 11 11 11 21 12
	• Stitches are not formed properly.	• Thread has not been pulled into thread sensor guide. • Threading is not correct. • Bobbin case has been threaded wrong. • Spool cap is wrong size for thread spool.	• Fully pull thread into thread sensor guide. • Correct threading. • Correctly thread bobbin case. • Replace the cap with correct size.	12,13 12,13 11 11

	Problem	Cause (Reason)	Action to be taken	Page
	• Fabric puckers	• Stitch length is too long for material. • Needle point is blunt.	• Decrease stitch length. • Replace needle.	17 21
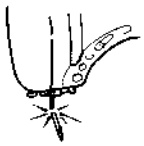	• Needle breaks.	• A thin needle was used for sewing heavy-weight material. • Needle has not been fully inserted into needle bar. • Needle clamp screw is loose. • Presser foot is not correct one.	• Use correct size needle. • Properly insert needle. • Securely tighten needle clamp screw. • Use correct presser foot.	21 21 21 8
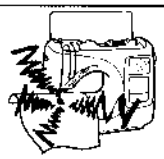	• Loud noise is heard.	• Dust has accumulated in feed dogs. • Lint is in hook.	• Clean machine. • Clean machine.	65 65 65
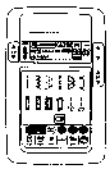	• Embroidery bed is installed, embroidery card is inserted, machine is turned on but screen shows utility patterns.	• Connector lever on embroidery bed not in proper position.	• Turn off power to machine. • Slide connector lever to full right position. • Turn on power to machine.	56
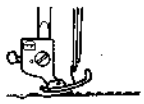	• The machine does not feed material.	• The stitch length has been set to zero. • The presser foot pressure is too low. • Feed dogs are lowered.	• Reselect the desired stitch pattern, and proper stitch length will be set. • Set presser foot pressure adjustment lever to "Normal". • Raise feed dogs.	17
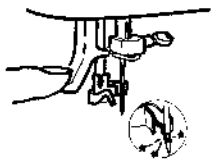	• Threading cannot be done. • The needle threader will not turn. • The threading hook will not enter needle eye.	• The needle is not in highest position. • The needle threader is designed not to turn to protect itself if the needle is not up. • The needle has not been fully inserted into needle bar.	• Turn handwheel until needle reaches its highest position. • Properly insert needle.	8 21
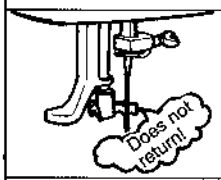	• Needle threader cannot be returned, and the sewing machine stops. • The threading hook is left in the needle eye.	• Sewing machine was accidentally started while threading hook was still in needle eye (during threading).	• Slightly turn handwheel clockwise and remove threader.	–
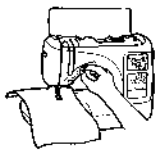	• Sewing machine will not sew when start button is pressed. • Sewing speed remains unchanged even when the sewing speed adjusting lever is moved while sewing.	• Speed controller has been plugged in.	• Unplug speed controller.	9

If any of the above problems should still remain after you have tried above suggestions, please contact a service center or the store where you purchased sewing machine.

Listing of Part Number of All Accessories Included with Machine, Optional Accessories and Most Common Replacement Parts.

Parts	Parts No.
Templates ①	386024
②	386025
③	386026
Assistant marker	283425
Needle pack	386033
Wing needle	283680
Auxiliary spool pin & felt	386019
Exclusive screwdriver	283394
Seam ripper	385098
Lint brush	283403
Quilt guide	283401
Eyelet punch	283392
Circle stitch ruler	386030
Tack	386031
Screw of ruler	386032
Standard presser foot (A)	386004
Zipper foot (B)	386014
Overcasting foot (C)	386018
Blindstitch presser foot (D)	386016
Buttonhole foot (E)	386012
Decorative stitch foot (T)	386029
Rolled hemming foot (F)	386011
Invisible zipper foot (G)	386015
Cording foot (H)	386013
Transparent buttonhole foot (I)	386027
Button sewing foot	283677
Even feet foot	386020
Embroidery:	
Embroidery frame	386008
Letter embroidery guide	386007
Initial letter embroidery frame	386009
Embroidery foot	386010
Embroidery card	See page 64.
Optional feet:	
Ruffler presser foot	386028
Pintuck foot	386022
Open toe embroidery foot	386023
Darning/embroidery foot	386017
Quilter's foot	386005
Side cutter	386001

Note: List all accessories, optional accessories and following most common replacement parts.

Parts	Parts No.
Bulb	283318
Thread spool cap	385376
Small spool cap	386003
Bobbin case cover	386002
Power cord	283647
Instruction manual	386034
Needle threader hook	283075
Bobbin case	386006

Part No. 386034 Eng.

Printed in Japan